IN THE UNITED STATES PATENT AND TRADEMARK OFFICE
BEFORE THE TRADEMARK TRIAL AND APPEAL BOARD

TTAB

In the matter of trademark application Serial No. 76/572,253
TTAB Opposition 91165809
For Plastic water bottle, sold empty, in IC 21
Published in the Official Gazette on (Date) 3/18/2005

TRIFOREST ENTERPRISES INCORPORATED
v.
NALGE NUNC INTERNATIONAL CORPORATION

OPPOSER'S TRIAL BRIEF

Mail Stop TTAB
Assistant Commissioner for Trademarks
P.O. Box 1451
Alexandria, VA 22313-1451

Opposer:
TriForest Enterprises, Inc.
17 Musick
Irvine, CA 92618

Applicant:
Nalge Nunc International Corporation a Delaware Corp.
75 Panorama Creek Drive
Rochester, NY 14602-0365

TABLE OF CONTENTS

Background	Page 3
The Mark Is a Product Design Which Is Functional	Page 4
Particular Functional Advantages Of the NNI Product Configuration	Page 9
Chart of Utilitarian Advantages	Page 16
US Patents Describe The Utilitarian Advantages Of The NNI Cap, Tether and Button Configuration	Page 21
The NNI Product Ratios are Ordinary and Common Ratios for Boston Round Plastic Water Bottles	Page 24
Conclusion	Page 27

[redacted]
01-04-2007
U.S. Patent & TMOfc/TM Mail Rcpt Dt. #22

INDEX OF CASES

In re Bose Corp., 772 F.2d 866, 277 USPQ 1 (Fed. Cir. 1985)

Brunswick Corp. v. British Seagull Ltd., 35 F.3d 1527, 1531, 32 U.S.P.Q.2D (BNA) 1120, 1122 (Fed. Cir. 1994)

Elmer v. ICC Fabricating, 67 F.3d 1571, 1580, 36 U.S.P.Q.2D (BNA) 1417, 1423 (Fed. Cir. 1995)

I.P. Lund Trading ApS v. Kohler, 163 F.3d 27, 38, 49 U.S.P.Q.2D (BNA) 1225, 1232 (1st Cir. 1998)

Morton-Norwich, 671 F.2d at 1336-37, 213 U.S.P.Q. (BNA) at 11-12

Qualitex, 514 U.S. at 165

In re R. M. Smith, Inc., 734 F.2d 1482, 222 USPQ 1 (Fed. Cir. 1984); TMEP §1202.02(a) et seq.

TrafFix Devices, Inc. v. Marketing Displays, Inc., 532 U.S. 23, 58 USPQ2d 1001 (2001)

Valu Engineering, Inc. v. Rexnord Corp., 61 USPQ2d 1422 (Fed. Cir. 2002)

Wilhelm Pudenz v. Littlefuse, Inc., 177 F.3d 1204, 1211-1212

Yurman Design, Inc. v. PAJ, Inc., 262 F.3d 101, 116 (2d Cir. 2001)

TriForest Enterprises, Inc. (hereafter "TriForest") previously moved for summary judgment against Nalge Nunc International Corporation a Delaware Corp., (hereafter "NNI") pursuant to Fed. R. Civ. P. 56 that there was no genuine issue of material fact, and opposer is entitled to a judgment as a matter of law. TriForest argued that expired utility patents and basic common sense shows that the asserted NNI trade dress is comprised of functional and commonplace features and therefore not registerable.

Functionality of the trade dress is revisited here again in the trial brief. The trademark trial and appeal board previously did not consider the motion for summary judgment, and the arguments in this trial brief roughly parallel the arguments previously made with the addition of some additional evidence.

I. BACKGROUND

TriForest Enterprises, Inc. and the applicant both sell plastic water bottles and are competitors in the marketplace. TriForest previously sold a small number of an old design narrow mouth round bottles but stopped after NNI sent cease and desist letters to TriForest and TriForest dealers.[1] NNI's allegations forced TriForest to make design modifications, such as those seen in Exhibit 12.[2] The new TriForest design is not disputed, but TriForest has a right to sell the old design because it is functional and commonplace.

The pre existing Boston Round shape is in the public domain and can not be monopolized, not even just for the sporting goods sector. There is no way the market can be segmented into specific application for the bottles. TriForest uses it for media, buffer and biochemical production, while Nalgene claims it for only water usage. Whether the bottle is used for outdoor recreation purposes or for laboratory chemicals, customers do not make this

[1] Lin Testimony, Pg. 32 Lines 1-8.
[2] Lin Testimony, Exhibit 12, Page 31.

distinction. The Nalgene word mark is what makes the difference in the mind of the consumer, not shape.

Nalgene took a Boston round laboratory bottle and put a tether cap on it, claiming it as a trademark. Nalgene's Boston round laboratory bottle without a tether cap is shown in Exhibit 10.[3] Exhibit 11 is the same product that TriForest sells with the tether cap.[4]

A side-by-side comparison[5] of the old TriForest bottle and the Nalgene bottle shows that the bottles are not identical. NNI alleges that they are confusingly similar. TriForest denies confusingly similarity. Customers look to the logo printed on the bottle as the main indicator to determine source of goods. Here, anyone can identify the bottles by their printed trademarks on the bottle. Thus, as a matter of law, there cannot be confusing similarity.

II. THE MARK IS A PRODUCT DESIGN WHICH IS FUNCTIONAL

The Boston Round with a functional tether cap should NOT be anyone's trademark.

The mark should have been refused under Trademark Act §2(e)(5), 15 U.S.C. 1052(e)(5) stating, "No trademark by which the goods of the applicant may be distinguished from the goods of others shall be refused registration on the principal register on account of its nature unless it: . . . (e) Consists of a mark which ... (5) comprises any matter that, as a whole, is functional."

The mark is a design configuration that has a utilitarian purpose. TrafFix Devices, Inc. v. Marketing Displays, Inc., 532 U.S. 23, 58 USPQ2d 1001 (2001); Valu Engineering, Inc. v. Rexnord Corp., 61 USPQ2d 1422 (Fed. Cir. 2002); In re Bose Corp., 772 F.2d 866, 277 USPQ 1 (Fed. Cir. 1985); In re R. M. Smith, Inc., 734 F.2d 1482, 222 USPQ 1 (Fed. Cir. 1984); TMEP §1202.02(a) et seq.

---

[3] Lin Testimony, Exhibit 10, Page 27.
[4] Lin Testimony, Exhibit 11, Page 30 Lines 12-21.
5 Lin Testimony, Exhibit 1.

Functionality is an absolute bar to registration. Yurman Design, Inc. v. PAJ, Inc., 262 F.3d 101, 116 (2d Cir. 2001), states that the "nonfunctionality requirement protects competition even at the cost of potential consumer confusion." So strong is the doctrine that even incontestable marks can be canceled on the basis of functionality. Wilhelm Pudenz v. Littlefuse, Inc., 177 F.3d 1204, 1211-1212, "We hold that a trademark registration that has achieved incontestable status under 15 U.S.C. § 1065 is still subject to attack based on functionality."

NNI is trying to get a patent from the trademark office, which is improper. Valu Eng'g, Inc. v. Rexnord Corp., 278 F.3d 1268, 1273 states:

> Morton-Norwich, 671 F.2d at 1336-37, 213 U.S.P.Q. (BNA) at 11-12, the Supreme Court and this court's predecessor have held that mark is not registrable if the design described is functional, because "patent law, not trade dress law, is the principal means for providing exclusive rights in useful product features." Elmer v. ICC Fabricating, 67 F.3d 1571, 1580, 36 U.S.P.Q.2D (BNA) 1417, 1423 (Fed. Cir. 1995). The First Circuit likewise has noted that "trademark and trade dress law cannot be used to evade the requirements of utility patents, nor the limits on monopolies imposed by the Patent Clause of the Constitution." I.P. Lund Trading ApS v. Kohler, 163 F.3d 27, 38, 49 U.S.P.Q.2D (BNA) 1225, 1232 (1st Cir. 1998). Commentators share this view: "trademark law cannot properly make an 'end run' around the strict requirements of utility patent law by giving equivalent rights to exclude." J. Thomas McCarthy, 1 McCarthy on Trademarks and Unfair Competition § 7:64, 7-147 (4th ed. 2001).

The functionality doctrine thus accommodates trademark law to the policies of patent law:

> The functionality doctrine prevents trademark law, which seeks to promote competition by protecting a firm's reputation, from instead inhibiting

> legitimate competition by allowing a producer to control a useful product feature. It is the province of patent law, not trademark law, to encourage invention by granting inventors a monopoly over new product designs or functions for a limited time, 35 U.S.C. §§ 154, 173, after which competitors are free to use the innovation. If a product's functional features could be used as trademarks, however, a monopoly over such features could be obtained without regard to whether they qualify as patents and could be extended forever (because trademarks may be renewed in perpetuity).

NNI's product design describes the mark as[6]:

> The mark consists of a plastic water bottle as shown, namely, a plastic water bottle having a transparent, generally cylindrical container body with rounded shoulders interconnecting the upper and lower extremities of a cylindrical sidewall to a relatively narrow container neck and a generally flat, circular container bottom, respectively; an opaque screw cap releasably engaged with threads on the upper portion of the neck and having a button connected to the center of its top surface via a short stem; and a strap terminating in small and large annular rings respectively encircling the button stem and the lower portion of the neck such that the large annular ring is spaced apart and visually distinct from the screw cap, wherein the ratio of the diameter of the generally cylindrical container body to the overall height of the water bottle is approximately 0.4 and the ratio of the height of the generally cylindrical container body extending between the neck and the container bottom to the overall height of the water bottle is approximately 0.8.

---

6 Lin Testimony, Page 17 Line 15 - Page 18 Line 23, Exhibit 7. See also Exhibit 16.

The NNI description is filled with highly functional words and phrases such as: plastic water bottle; cylindrical container body; narrow container neck; screw cap releasably engaged with threads; strap; and button stem. The highly functional words and phrases make the description sound like a utility patent claim. Because the mark is functional, even a showing of secondary meaning does not remove the absolute bar to registration. TrafFix Devices, Inc. v. Marketing Displays, Inc., 532 U.S. 23, 58 USPQ2d 1001, 1007 (2001).

NNI may counter that the function of all plastic water bottles is to hold water, and that holding water should be a protected de facto functional feature incidental to the claim of trademark protection.

Valu Eng'g, Inc. v. Rexnord Corp., 278 F.3d 1268, 1274 states,

> Our decisions distinguish de facto functional features, which may be entitled to trademark protection, from de jure functional features, which are not." In essence, de facto functional means that the design of a product has a function, i.e., a bottle of any design holds fluid." In re R.M. Smith, Inc., 734 F.2d 1482, 1484, 222 U.S.P.Q. (BNA) 1, 3 (Fed. Cir. 1984). De facto functionality does not necessarily defeat registrability. Morton-Norwich, 671 F.2d at 1337, 213 U.S.P.Q. (BNA) at 13 (A design that is de facto functional, i.e., "'functional' in the lay sense . . . may be legally recognized as an indication of source."). De jure functionality means that the product has a particular shape "because it works better in this shape." Smith, 734 F.2d at 1484, 222 U.S.P.Q. (BNA) at 3. ...
>
> To determine whether a particular product design is de jure functional, we have applied the "Morton-Norwich factors": (1) the existence of a utility patent disclosing the utilitarian advantages of the design; (2) advertising materials in which the originator of

the design touts the design's utilitarian advantages; (3) the availability to competitors of functionally equivalent designs; and (4) facts indicating that the design results in a comparatively simple or cheap method of manufacturing the product. Morton-Norwich, 671 F.2d at 1340-41, 213 U.S.P.Q. (BNA) at 15-16.

There are other bottles that are fairly simple in design that have been registered. NNI would argue that the fact that these bottles hold liquid is a de facto utilitarian function. NNI would cite the Listerine bottle registered as U.S. Trademark Reg. No. 2287138 (Mouthwash Class 3)[7] and maybe the Chanel bottle U.S. Trademark Reg. No. 2382784 (Perfume Class 3).[8]

It is true that the mouth wash bottle and perfume bottle were registered.

Note that the NNI trademark is for the product itself. The Boston Round with a functional tether cap should NOT be anyone's trademark. The drawing page states that it is a, "Plastic water bottle, sold empty, in International Class 21."[9] which would make it a product design. On the other hand, consumers purchase the other bottles primarily to obtain the mouthwash or perfume inside. This would mean that the mouth wash bottle and perfume bottle are product packaging instead of the product itself. The essence of good product packaging is distinctive ornamentation, but the essence of good product design is functionality.

In both cases the structure of the mouth wash bottle and perfume bottle does not provide substantial utilitarian advantages. Looking at the registration certificate of U.S. Trademark Reg. No. 2382784 the perfume bottle has a generic beveled rectangular body, but also has a distinctive cap stopper that also has a beveled architecture.[10] The bottle body bevels are decorative because they add lines and definition to the overall look. The cap does not functionally need to be

---

7 Lin Testimony, Pg. 15 Lines 16-21.
8 Lin Testimony, Pg. 16 Line 25, Pg. 17 Line 3.
9 Lin Testimony, Page 18 Line 2-3, Exhibit 7.
10 Lin Testimony, Exhibit 6.

beveled or oversized as seen in the registration certificate. Furthermore, the bevels join to form decorative facets that are primarily ornamental as opposed to functional.

Similarly, the Listerine bottle as shown in U.S. Trademark Reg. No. 2287138 does not perform better because it has beveled designs.[11] The ornamentation on the perfume and mouth wash bottle costs more to produce, and decreases the potential volume of the bottle. Making the bottle round would increase the volume and contribute to a de jure utilitarian advantage, however, the ornamental style of the perfume and mouth wash bottle does not substantially contribute to any functional advantage.

TriForest argues that these features of the NNI bottle are stated in such a way that they have de jure functionality, in other words, the specific features mentioned in the trademark description are particularly functionally advantageous. It is the recitation of the particular functional advantages that makes the trademark description sound like a patent claim. The particular functional advantages if monopolized by NNI, would limit TriForest's revenue by limiting product design choices.

III. PARTICULAR FUNCTIONAL ADVANTAGES OF THE NNI PRODUCT CONFIGURATION

The functionality issue has been discussed in discovery. The applicant in interrogatory #11 asked the opposer why the opposer adopted the old TriForest design. TriForest responded that these particular features are functionally beneficial. The interrogatory and response is quoted below.

INTERROGATORY NO. 11:

Set forth with specificity the circumstances and all facts regarding, relating or referring to the selection by Opposer of the configurations of the goods identified in

11 Lin Testimony, Exhibit 5.

response to Interrogatory No. 1, and identify all documents related thereto.

RESPONSE TO INTERROGATORY NO. 11:

The applicant has the current statement of the trademark in the trademark Office as: The mark consists of a plastic water bottle as shown, namely, a plastic water bottle having a transparent, generally cylindrical container body with rounded shoulders interconnecting the upper and lower extremities of a cylindrical sidewall to a relatively narrow container neck and a generally flat, circular container bottom, respectively; an opaque screw cap releasably engaged with threads on the upper portion of the neck and having a button connected to the center of its top surface via a short stem; and a strap terminating in small and large annular rings respectively encircling the button stem and the lower portion of the neck such that the large annular ring is spaced apart and visually distinct from the screw cap, wherein the ratio of the diameter of the generally cylindrical container body to the overall height of the water bottle is approximately 0.4 and the ratio of the height of the generally cylindrical container body extending between the neck and the container bottom to the overall height of the water bottle is approximately 0.8.

The opposer designed the original bottle based on a review of various Boston round designs. The opposer then created the original bottle based on efficient engineering principles.

The original bottle is made of plastic because plastic is a good material to make a water bottle. Plastic is generally well accepted as a way of making a bottle. Plastic is relatively inexpensive compared to stainless steel or silver. Plastic is watertight and can seal water within a closed container. Plastic can also be formed with a closure that is threaded and

watertight. Plastic is a petroleum derivative that is relatively abundant compared to metal. The opposer did not make the bottles out of wood, stone or soap because these materials are not as durable. A soap bottle would dissolve in water and a wooden bottle would split and is not well suited for holding a liquid. During the autoclave process, the plastic is particularly well-suited for the construction of the bottle.

The opposer made bottles that were transparent so that users could look into the container and see if there are contents within the container. Transparency of the bottle also provides a user with the opportunity to determine the quantity of liquid within the bottle. Transparency also allows a user to determine if there are color changes or any other types of qualitative change within the bottle. Transparency is particularly useful during hiking because a foreign object could accidentally fall inside the bottle and a user may drink the foreign object by accident if the user could not see inside the bottle. In laboratory tests, a user may see foreign objects that have accidentally fallen inside of the bottle that may change the results of any laboratory tests. In laboratory use, the bottle often has a media inside that is supposed to be sterile. Having a transparent surface allows a laboratory worker to look inside of the bottle to see if there is anything foreign, such as an insect like a mosquito, fly, mayfly or cockroach. The transparency of the bottle is also helpful for a user because the user can see if the bottle is clean. If the bottle is dirty, the user may want to clean the bottle. If the user wants a dirty bottle, having a transparent surface would insure that there is debris in the bottle. Overall, transparent bottles have been in use since early glass bottles. Early glass bottles are ancient.

The bottle is generally cylindrical with rounded shoulders because some machines roll the bottle. Also, the bottle been generally cylindrical with rounded shoulders allows a greater volume to surface area ratio. This is helpful when optimizing construction so that the plastic use is minimized and the strength of the bottle is maximized. The rounded shoulders interconnect with the upper and lower extremities of the cylindrical sidewalls because if they were not connected, the bottle would fall apart and the contents will leak out. It is better that the bottles are made of integrally formed or blown pieces, rather than pieced together from a number of independent interlocking pieces.

The relatively narrow container neck is commonly known as a narrow mouth bottle. The narrow mouth bottle is good because it is easier to pour of the contents or to drink from the bottle. If the mouth is too large, it is easier to spill all over the place. The narrow mouth bottle is a very good configuration. There are a wide number of narrow mouth bottles such as milk bottles. Milk is put into bottles that have a narrow mouth because this makes it easier to pour the milk. Orange juice is also put into bottles that have a narrow mouth because it is easier to pour the orange juice. A variety of liquids can be put into a narrow mouth bottle allowing easier pouring of the contents. This applies to granular media such as sand, or coffee grounds as well. When a person purchases a can of coffee at the store that is in the 5 lb. canned version, the person needs to use the scoop that that can comes with because it is hard to pour out of a can that has a large diameter. The contents will pour out of the middle portion of the mouth, but also out of the sides of the mouth. The stream of contents is proportional to the radius of the bottle opening.

The bottle has a generally flat container bottom that a circular because the bottle is in the shape of a cylinder. The circular bottom is formed by the bisecting plane between the cylinder and a plane. The flat bottom is very helpful. If the bottom is not flat, the bottle has a tendency to tip over. The bottle should not tip over. If the bottle tips over the contents will pour out. Having a flat bottom is the best way to keep the bottle from tipping over. Alternative methods such as using adhesive resin to bond the bottle to a table is not as good because the bottle would become stuck and difficult to remove from a table. The bottle could also be made to have a circular depression such that the bottom of the bottle forms a rim. This is helpful for strength of the bottle. If the bottle has a small circular depression or a broad one, the best way to make the bottle is with a flat bottom.

The screw cap is opaque and engaged with threads on the upper portion of the neck because transparent material is more expensive and difficult to work with on a screw cap. The screw cap should be softer and thus opaque materials are better at forming the screw cap. It would be more expensive to make transparent screw caps because the plastic is more expensive. If a user can see through the wall of the bottle, it is not that big of a deal that the user cannot see through the screw cap. The screw cap engages with threads because it is easier to screw on a bottle cap rather than snap it on. The snap on version is too easily snapped off. The screw configuration is a better way to seal the bottle with certainty.

The screw cap has a button connected to the center of its top surface via a short stem because the screw cap is tethered to the bottle. The tether rotates about the button that

serves as an axis of rotation to retain the tether to the cap. Once the user takes off the cap, the tether is very helpful because otherwise the cap would be lost or roll away. The connection is formed as a button because the button configuration provides a good axial connection while maintaining low weight and cost. The button is essentially a rivet that turns. If the tether were directly formed to the screw cap, the screw cap would stop turning because the tether would bias the screw cap by exerting a clockwise force. Therefore, and axial connection is preferred. The tether connection to the shrink ring was the easiest connection. Other alternatives such as Sonic welding would require additional machinery and production process. The tether connection to the shrink ring provides a manual solution for connection.

The strap terminates in small and large annular rings respectively encircling the button stem and the lower portion of the neck such that the large annular ring is spaced apart and visually distinct from the screw cap, because the small ring is necessary for rotation with the cap, and the large ring is necessary for connection with the shrink ring. The button stem is preferably encircled because that provides a pivotal connection. The strap is visually distinct from the screw cap because they are separate parts. They are separate parts because the screw cap needs to rotate around the mouth of the bottle while the strap remains stationary. If the strap rotates with the screw cap, the strap will interfere with the hand of the user especially if the user is removing or putting the cap on using a single hand. The top ring is smaller because it does not need to be very large for the connection with the cap. Though bottom ring is larger because it must fit around the shrink ring near the base of the bottle. If the top ring were larger than the bottom, the ring would protrude

over the top surface of the cap and hinder the fingers of the user. The top ring should be smaller than the top of the top surface of the cap because the fingers of the user preferably grasp the interface between the top surface of the cap and the side surfaces of the cap. The top ring being in the same size as the top surface of the cap would limit the user to grasping only the side surfaces of the cap. This limitation would prevent a user from tightening the cap as much as a user could have if the user had access to grab more surface area on the cap.

The ratio of the diameter of the generally cylindrical container body to the overall height of the water bottle is approximately .4 because in a 500ml cylindrical container, that ratio produces a circumference that is approximately equivalent to the size of an average person's hand. The .4 ratio is particularly comfortable and easy to hold. If the container were overly long, it would require additional plastic to create and would not be as strong. The overlong container would also not be as strong because is more of a stick shaped container. The 500ml cylindrical container is a standard size. It is half a liter. A liter is a metric size. Metric units are widely adopted in the world. A metric units are particularly helpful in science because all of the unit's are based 10. Dealing with inches and feet, and gallons makes calculations difficult. Therefore, the standard size half liter container is particularly well-suited for a person's hand when .4 ratio is in place.

The ratio of the height of the generally cylindrical container body extending between the neck and the container bottom to the overall height of the water bottle is approximately 0.8 because with the .4 ratio previously mentioned, the cap would be on the order of

several inches in height. Having a cap that produces a .7 ratio would make the cap size overly long and create a long neck that is taller than it is wide. Having a cap that produces a .9 ratio would make the gripping area too small for an average person's fingers. Therefore, the .8 ratio is derived from the .4 ratio which is derived from the combination of the standard size 500ml container in combination with an average person's hand size.

The container is designed to hold water because it is a bottle. Water is the most plentiful liquid on the planet. A wide variety of liquids can be stored within the container. If the container were not designed to hold water, it would not work as well as a container that could hold water. Humans drink water during exercise and on a daily basis. Humans are comprised of a substantial percentage of water weight. Therefore, the opposer designed the bottle to hold water because holding water is a convenient and utilitarian function of a bottle.[12]

IV. CHART OF UTILITARIAN ADVANTAGES

Because of the descriptive nature of the interrogatory response above, the utilitarian advantages may be condensed and organized in a chart format.

MARK DESCRIPTION	UTILITARIAN ADVANTAGES
The mark consists of a plastic water bottle as	Plastic is one of the best materials to make a water bottle. Plastic is inexpensive, durable, watertight, chemically inert resisting

12 Lin Testimony, Exhibit 18, Pg 7-11.

shown, namely,	corrosion, cryogenically freezable, sterilization autoclavable, strong and light. Plastic forms a good water seal.[13]
a plastic water bottle having a transparent,	Transparent bottles allow a user to see inside the container to find foreign objects and see if the bottle is clean. Glass was used in ancient bottles because glass can be transparent.[14]
generally cylindrical container body	A cylindrical container body minimizes material required while maximizing strength. Laboratory machines for mixing often roll a bottle and would not be able to roll a square bottle. Generally cylindrical bottle with rounded shoulders allows a greater volume to surface area ratio and optimizes plastic use.[15] Cylindrical smoothness makes label application and screen printing easier. Grooves cause awkward screen printing discontinuities such as those seen in applicant NNI's Exhibit 40-2. [16]
with rounded shoulders interconnecting the upper and lower extremities of a cylindrical sidewall to a	The rounded shoulders interconnect with the upper and lower extremities of the cylindrical sidewalls to provide good structural integrity. [17] Square shoulders are not as strong and use more material. Round cylinders are particularly strong in proportion to material used because uniform wall thickness and circumference provides even pressure distribution.

13 Lin Testimony, Pg. 18 Line 24 – Pg. 19 Lines 1-9.
14 Lin Testimony, Pg. 19 Lines 18-25 – Pg. 20 Lines 1-3.
15 Lin Testimony, Pg. 20 Lines 4-19.
[16] See Lin Testimony, applicant NNI's Exhibit 40-2 shows that grooves interfere with screen printing, making screen printing discontinuous. Water level marker is discontinuous in Exhibit 40-2. The applicant mark does not have this problem because it is functionally simpler.
17 Lin Testimony, Pg. 21 Lines 9-18.

relatively narrow container neck	The relatively narrow container neck also known as a narrow mouth makes it easier to pour from and easier to drink from. A wide mouth is not as good for pouring because contents will pour from the sides of the mouth.
and a generally flat, circular container bottom, respectively;	The flat container bottom is necessarily circular because the bottle is cylindrical. A bisecting plane through a cylinder forms a circular bottom. If the bottom is not flat, the bottle will not stand up.
an opaque screw cap releasably engaged with threads on the upper portion of the neck	The opaque screw cap is cheaper and softer. It would be more difficult to make a transparent cap. Transparent material such as polycarbonate is more expensive, harder, more brittle and would not seal well as a materials that are opaque. Because user can see through the wall of the bottle, the user does not need to see through the screw cap. Finally, a threaded connection is stronger than a snap on connection.[18]
and having a button connected to the center of its top surface via a short stem;	The button is the axial connector between the cap and tether. The button allows the tether to rotate about the button and cap.[19] The button axial connector maintains a low profile to lower bulk, weight and cost. If the tether were directly formed to the screw cap, rotation of the screw cap would move the tether and interfere with a user's hand during cap rotation.[20]
and a strap terminating in	The small ring button connection is necessary for rotation with the

18 Lin Testimony, Pg. 21 Lines 19-25 – Pg. 22 Lines 1-15.
[19] Lin Testimony, Pg. 133 Lines 1-12.
20 Lin Testimony, Pg. 22 Lines 24-25 – Pg. 23 Lines 1-5.

small and large annular rings respectively encircling the button stem and the lower portion of the neck such that the large annular ring is spaced apart and visually distinct from the screw cap,	cap, and the large ring is necessary for connection with the shrink ring. The strap is necessarily visually distinct from the screw cap because they are separate parts. The top ring is smaller to save reduce plastic usage, and be unobtrusive to user grip.[21] A large top ring causes the tether to rotate with the cap such as the tether of Exhibit 32, which rotates with the cap interfering with hand grip.[22] The bottom ring is larger to fit around the shrink ring on the neck. The rings are annular to facilitate rotation. [23]

[21] Lin Testimony, Pg. 132-133.
[22] See Lin Testimony pg. 162, line 6 witness stating, "If you use one hand, the tether turn with it."
23 Lin Testimony, Pg. 23 Lines 17-25 – Pg. 24 Lines 1-9.

wherein the ratio of the diameter of the generally cylindrical container body to the overall height of the water bottle is approximately 0.4 and the ratio of the height of the generally cylindrical container body extending between the neck and the container bottom to the overall height of the water bottle is approximately 0.8.	The ratio of the diameter of the generally cylindrical container body to the overall height of the water bottle is approximately .4 because in a 500ml cylindrical container, that ratio produces a circumference that is approximately equivalent to the size of an average person's hand. The .4 ratio is particularly comfortable and easy to hold. If the container were overly long, it would require additional plastic to create and would not be as strong. The 500ml cylindrical container is a standard size half liter. The standard size half liter container is particularly well-suited for a person's hand and a .4 ratio. [24] The ratio of the height of the generally cylindrical container body extending between the neck and the container bottom to the overall height of the water bottle is approximately 0.8 because with the .4 ratio, the cap would be about several inches in height. Having a cap that produces a .7 ratio would make the cap size overly long and create a long neck that is taller than it is wide. Having a cap that produces a .9 ratio would make the gripping area too small for an average person's fingers. Therefore, the .8 ratio is derived from the .4 ratio which is derived from the combination of the standard size 500ml container in combination with an average person's hand size.

24 Lin Testimony, Pg. 24 Lines 20-25, Pg. 25 Line 1, Pg. 26 Lines 15-24 (These ratios are typical bottle ratios.) Bottle sizes should not be patented via the trademark office.

Also, the simplicity of the NNI alleged trademark reduces the failure rate.[25] The Nalgene grip is a fine grip that is easier to grip.[26]

V. US PATENTS DESCRIBE THE UTILITARIAN ADVANTAGES OF THE NNI CAP, TETHER AND BUTTON CONFIGURATION

United States utility patents are evidence of functionality and show that NNI's alleged trade dress elements are functional.[27] The chart below organizes the patented utility advantages.

MARK DESCRIPTION	PATENTED UTILITARIAN ADVANTAGES
The mark consists of a plastic water bottle as shown, namely, a plastic water bottle	"Conventionally, plastic containers are well known for containing water, gasoline and other liquids ...." (Berney US Patent 4,595,130, Col 1, lines 11-16) [28]
having a transparent, generally cylindrical container body	T.B. Birnbaum U.S. Patent No. 524,159 STOPPER OR COVER FOR THE MOUTHS OF BOTTLES was patented August 7, 1894. and shows a generally cylindrical container body in Figs. 2-3.[29] In 1894, 112 years ago, glass bottles were generally known to be transparent.
with rounded shoulders	T.B. Birnbaum Figs. 2-3 show rounded shoulders interconnecting

[25] Lin Testimony, Page 32 Lines 12-20.
[26] Lin Testimony, Page 33 Lines 11-14. See also Lin Testimony, Page 155 Lines 8-13.
27 "The existence of a valid functional patent disclosing the utilitarian advantages of the configuration in question is very strong, if not conclusive, evidence of the functionality of the configuration" McCarthy's on Trademarks and Unfair Competition at §7:88, page 7-238, rev 12/2000.
28 Lin Testimony, Exhibit 2.
29 Lin Testimony, Exhibit 3.

interconnecting the upper and lower extremities of a cylindrical sidewall to a	with the upper and lower extremities of the cylindrical sidewalls to provide good structural integrity.[30]
relatively narrow container neck and a generally flat, circular container bottom, respectively;	Birnbaum Figs. 2-3 show a relatively narrow container neck also known as a narrow mouth for easy pour. Although the patent does not show the bottle bottom, it would generally be understood that the bottle bottom was circular and flat. [31]
an opaque screw cap releasably engaged with threads on the upper portion of the neck	US Patent 4,526,289 to Schiemann shows an opaque screw cap and claims it also as, "5. Screw stopper according to claim 1, wherein the external threads and internal threads have a diameter of about 30 to 50 mm. with a pitch of about 5 mm. and extend axially over about 15 to 25 mm., and the collar extends radially about 2 mm. beyond the external threads and the collar and the cylinder wall have an axial extent of about 5 mm." (col 4, lines 42-48)[32]
and having a button connected to the center of its top surface via a short stem;	NNI trademark application element "having a button connected to the center of its top surface via a short stem" is functional. The button connection is described in Berney US Patent 4,595,130 issued Jun 17, 1986 now expired. "A flexible tether 27 includes a loop 28 at one end engaging an annular groove 29 adjacent the upper side 19 of the cap and having a further loop 30 engaging an

30 Id.
31 Id.
32 Lin Testimony, Exhibit 4.

	annular groove 31 around the base of the pouring neck 11 thus permitting the cap to be rotated freely yet anchoring same to the container 10." (US Patent 4,595,130, Col 3, lines 33-38) Here the NNI button is formed in the Berney patent as "an annular groove 29 adjacent the upper side 19 of the cap". [33]
and a strap terminating in small and large annular rings respectively encircling the button stem and the lower portion of the neck such that the large annular ring is spaced apart and visually distinct from the screw cap,	Loop 28 of the Berney '130 patent is the NNI small annular ring and loop 30 of the patent is the NNI large annular ring. Fig. 5 of the patent shows a button 19 rising on a short stem forming a groove 29 (US Patent 4,595,130, Fig. 5, sheet 4 of 5) Loop 28 of the Berney patent is smaller than loop 30 making Loop 28 the small annular ring and loop 30 the large annular ring. As seen in Fig. 2 of the '130 patent, the ring is visually distinct from the screw cap, screw cap is necessarily be visually distinct from the annular ring, because they are separate pieces.[34] T.B. Birnbaum U.S. Patent No. 524,159 Figs. 2-3 also shows a large annular ring B encircling the lower portion of the neck such that the large annular ring B is spaced apart and visually distinct from the screw cap. "A is the rubber thimble or cap , B is the rubber ring adapted to be placed about the neck of a bottle, and C a

33 Lin Testimony, Exhibit 2.
34 Id.

	string for securing the rubber cap and ring together." (T.B. Birnbaum, col 2, lines 56-59) [35]

VI. THE NNI PRODUCT RATIOS ARE ORDINARY AND COMMON RATIOS FOR BOSTON ROUND PLASTIC WATER BOTTLES

Commonplace product configuration cannot become a trademark. The Boston Round with a functional tether cap should NOT be anyone's trademark. NNI claims a 0.4 diameter to height ratio and a 0.8 neck height to total height ratio. Note that the neck height begins from the bottom of the neck. Regarding the main body ratios, they have been ordinary and common for Boston Rounds that have been in the marketplace for many years. There are many companies such as Owens-Illinois, and Brockaway Glass who have been manufacturing such bottles since early 1960's. The Owens-Illinois website shows the Boston round.[36]

Additionally, the Bomatic, Inc. website has an illustration of the Boston Round bottle: The drawing below was copied from www.bomatic.com/Catalog/boston_pvc_18oz.html[37]

35 Lin Testimony, Exhibit 3.
36 http://www.o-i.com/pkgsolutions/healthcaremed/healthcare/glasspkgoverview.asp
37 Lin Testimony pg. 25, line 26, Exhibit 8

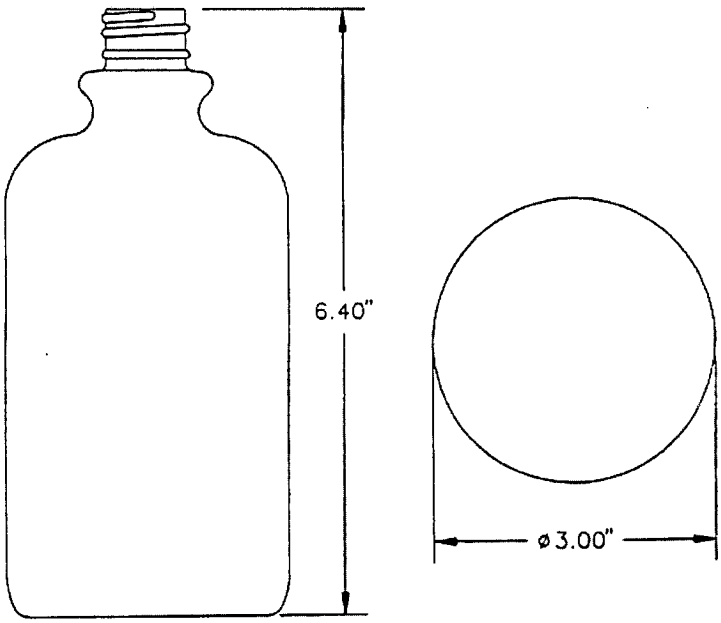

The bottle of Bomatic, Inc. hereafter (BMI) has the general proportions of the claimed NNI trademark. The diameter to height ratio is basically the same. The BMI ratio is 3" ÷ 6.4" = .47 ratio, which would be close to NNI's .4 ratio.

Note that the drawing indicates a label area which coincides with the cylindrical portion of the bottle. The drawing below is from www.mayfairplastics.com/drawings/Boston16a1.gif[38]

[38] Lin Testimony, Exhibit 9.

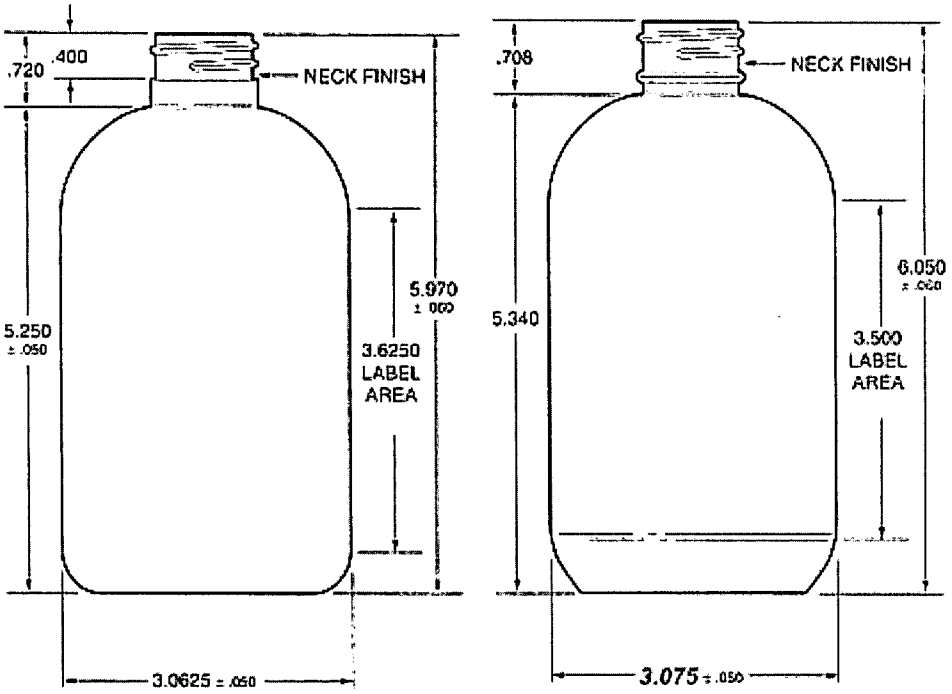

Material: HDPE
Neck Finish: 28/410
Weight: 30 grams
Bulk Pack: 175 Box w/Liner
Box Size: 23 x 15 7/16 x 29 7/8 in.
Box Weight: 15 lbs.

S.P.I. Tolerances Apply
Unless Otherwise Noted

The Boston Round can be a plastic water bottle and can be made transparent. The Boston Round with a functional tether cap should NOT be anyone's trademark. It has a generally cylindrical container body with rounded shoulders interconnecting the upper and lower extremities of a cylindrical sidewall to a relatively narrow container neck. It also has a generally flat, circular container bottom. The Boston round typically includes an opaque screw cap releasably engaged with threads on the upper portion of the neck. [39]

The Boston round has a ratio of the diameter of the generally cylindrical container body to the overall height of the water bottle of approximately 0.4 and the ratio of the height of the generally cylindrical container body extending between the neck and the container bottom to the

39 Lin Testimony, Exhibit 9, Pg. 25 Lines 18-25.

overall height of the water bottle is approximately 0.8. The Mayfair Plastics Boston round shown in the drawing above has a diameter high ratio of about 0.5 and an overall height neck height ratio of about 0.9.[40] This is within the range of being confusingly similar to the Nalgene alleged trade dress. NNI's 0.4 diameter to height ratio and a 0.8 neck height to total height ratio are standard. The ratios are functionally necessary to fit bottles into standard laboratory machines, packaging machines, and related bottle holders.

Even if the ratios were not standard, they are too basic to be trade dress. McCarthy's on Trademarks and Unfair Competition states, "Simple, cylindrical containers have often been held to be merely utilitarian and functional. The First Circuit held that a 'prosaic' cylindrical container for crackers was functional and unprotectable and noted that if the law were not so, the unacceptable result would be that 'the first user of a container such as the now-standard soup can, potato chip bag, or cracker box would be able to preclude competitors from using these highly functional containers.'"[41]

A round bottle is automated labeling machine friendly. It allows labels to be adhered by uniform rotation.[42] A simple cylindrical bottle is less expensive to make than bottles with several curves, textures, and angles. Every feature in plastic production is an engineering complication.

VII. CONCLUSION

Free competition is an important public policy. The Boston Round with a functional tether cap should NOT be anyone's trademark. As the court stated in Valu Engineering, Inc. v.

---

40 Id.
41 McCarthy's on Trademarks and Unfair Competition at §7:87, page 7-235, rev 12/2000.
42 Lin Testimony, Pg. 20 Lines 6-12

Rexnord Corp., 61 USPQ2d 1422 (Fed. Cir. 2002):

> An important policy underlying the functionality doctrine is the preservation of competition. As this court's predecessor noted in Morton-Norwich, the "effect upon competition 'is really the crux'" of the functionality inquiry, 671 F.2d at 1341, 213 U.S.P.Q. (BNA) at 16, and, accordingly, the functionality doctrine preserves competition by ensuring competitors "the right to compete effectively." Id. at 1339. As we stated in Brunswick Corp. v. British Seagull Ltd., 35 F.3d 1527, 1531, 32 U.S.P.Q.2D (BNA) 1120, 1122 (Fed. Cir. 1994), "functionality rests on 'utility,' which is determined in light of 'superiority of design,' and rests upon the foundation of 'effective competition.'" The importance of competition was reaffirmed in Qualitex, in which the Supreme Court focused on whether a feature "would put competitors at a significant non-reputation-related disadvantage." Qualitex, 514 U.S. at 165. And when discussing the policy behind limiting trade dress protection, the Supreme Court in TrafFix noted that "allowing competitors to copy will have salutary effects in many instances." TrafFix, 121 S. Ct. at 1260.

The Boston Round with a functional tether cap should NOT be anyone's trademark. The mark is functional and basically just a general use bottle with a tether screw cap. Design arounds require modification to the basic design. The mark in exhibit 16 is the simplest and most efficient basic tether cap connection plastic water bottle. Other designs not considered infringing as seen in Exhibit 15 are substantially more complicated. The Eddie Bauer bottle of Exhibit 15 has hand grooves the body sides, and the Starbucks bottle has indentations on the lower half of the body. Finally, the opposer bottle made for Timberland of Exhibit 15 has ribs on the shoulder. Therefore, to avoid infringement, competitors must add substantial complicated additional

features to the basic design. The opposer Triforest's minor cosmetic changes as seen in the side by side comparison in Exhibit 1 is alleged by the applicant as insufficient to design around the Nalgene claimed trade dress also seen in Exhibit 1.

The Boston Round with a functional tether cap should NOT be anyone's trademark. The Trademark Act is not a 35 U.S.C. §102(b)[43] loophole. If the applicant has the trademark as claimed, designing around the trade dress would entail giving up at least one of the claimed utilitarian benefits of the trade dress. The applicant has presented a wide variety of water bottle configurations as shown as in Exhibits 19 through 45. None of these bottles is a regular Boston round bottle. Opposer simply wants to be able to make the regular Boston round bottle with a tether cap connected by a sonically welded button. Opposer should not have to add ornamentation, change bottle shape or adopt a wide loop top to do this since the fundamental design is functional and the most simple. Therefore, the opposer prays that the applicant be denied registration under Trademark Act §2(e)(5), 15 U.S.C. §1052(e)(5).

Triforest has various objections such as relevancy regarding applicant witness testimony and reserves these objections until the response to NNI's trial brief.

Respectfully submitted,

By Clement Cheng, Esq. _____ Date: 12/13/06
17220 Newhope St., Suite 127
Fountain Valley, CA 92708
Phone: (714) 825-0555

Attorney for Opposer

---

43 35 U.S.C. §102 "A person shall be entitled to a patent unless ... (b) the invention was patented or described in a printed publication in this or a foreign country or in public use or on sale in this country, more than one year prior to the date of the application for patent in the United States, or"

PROOF OF SERVICE

In the matter of trademark application Serial No. **76/572,253**

I, the undersigned, declare I am over the age of 18 and not a party to this action. My business address is at 17220 Newhope St., Suite 127 Fountain Valley, CA 92708.

On December 13, 2006, I served:

OPPOSER'S TRIAL BRIEF

By placing true copies thereof in a sealed envelope, addressed as follows to:

1 copy sent to:
DONALD F. FREI
WOOD, HERRON & EVANS, L.L.P.
2700 CAREW TOWER
441 VINE STREET
CINCINNATI, OH 45202-2917
ATTORNEY FOR APPLICANT

1 copy sent to:
Mail Stop TTAB
Assistant Commissioner for Trademarks
P.O. Box 1451
Alexandria, VA 22313-1451

☐ BY PERSONAL SERVICE: I caused such envelope to be delivered by hand to the offices of the addressee(s).

☒ BY MAIL: I am readily familiar with the practice of the office for collection and processing of correspondence for mailing with the United States Postal Service. Under that practice, correspondence is put in the office outgoing mail tray for collection and is deposited in the U.S. Mail that same day in the ordinary course of business. I am aware that, on motion of the party served, service is presumed invalid if the postal cancellation date or postage meter date is more than one (1) day after the date of deposit for mailing shown on this proof of service.

☒ FEDERAL: I declare under penalty of perjury under the laws of the United States that the foregoing is true and that I am employed in the office of a member of the Bar of this Court at whose direction the service was made.

☐ STATE: I declare under penalty of perjury under the laws of the State of California that the foregoing is true and correct.

Executed on December 13, 2006, at Fountain Valley, California.

signer

IN THE UNITED STATES PATENT AND TRADEMARK OFFICE
BEFORE THE TRADEMARK TRIAL AND APPEAL BOARD

In the matter of trademark application Serial No. 76/572,253
TTAB Opposition 91165809
For Plastic water bottle, sold empty, in IC 21
Published in the Official Gazette on (Date) 3/18/2005

TRIFOREST ENTERPRISES INCORPORATED
v.
NALGE NUNC INTERNATIONAL CORPORATION

OPPOSER'S TRIAL BRIEF

Mail Stop TTAB
Assistant Commissioner for Trademarks
P.O. Box 1451
Alexandria, VA 22313-1451

Opposer:
TriForest Enterprises, Inc.
17 Musick
Irvine, CA 92618

Applicant:
Nalge Nunc International Corporation a Delaware Corp.
75 Panorama Creek Drive
Rochester, NY 14602-0365

TABLE OF CONTENTS

Background	Page 3
The Mark Is a Product Design Which Is Functional	Page 4
Particular Functional Advantages Of the NNI Product Configuration	Page 9
Chart of Utilitarian Advantages	Page 16
US Patents Describe The Utilitarian Advantages Of The NNI Cap, Tether and Button Configuration	Page 21
The NNI Product Ratios are Ordinary and Common Ratios for Boston Round Plastic Water Bottles	Page 24
Conclusion	Page 27

INDEX OF CASES

In re Bose Corp., 772 F.2d 866, 277 USPQ 1 (Fed. Cir. 1985)

Brunswick Corp. v. British Seagull Ltd., 35 F.3d 1527, 1531, 32 U.S.P.Q.2D (BNA) 1120, 1122 (Fed. Cir. 1994)

Elmer v. ICC Fabricating, 67 F.3d 1571, 1580, 36 U.S.P.Q.2D (BNA) 1417, 1423 (Fed. Cir. 1995)

I.P. Lund Trading ApS v. Kohler, 163 F.3d 27, 38, 49 U.S.P.Q.2D (BNA) 1225, 1232 (1st Cir. 1998)

Morton-Norwich, 671 F.2d at 1336-37, 213 U.S.P.Q. (BNA) at 11-12

Qualitex, 514 U.S. at 165

In re R. M. Smith, Inc., 734 F.2d 1482, 222 USPQ 1 (Fed. Cir. 1984); TMEP §1202.02(a) et seq.

TrafFix Devices, Inc. v. Marketing Displays, Inc., 532 U.S. 23, 58 USPQ2d 1001 (2001)

Valu Engineering, Inc. v. Rexnord Corp., 61 USPQ2d 1422 (Fed. Cir. 2002)

Wilhelm Pudenz v. Littlefuse, Inc., 177 F.3d 1204, 1211-1212

Yurman Design, Inc. v. PAJ, Inc., 262 F.3d 101, 116 (2d Cir. 2001)

TriForest Enterprises, Inc. (hereafter "TriForest") previously moved for summary judgment against Nalge Nunc International Corporation a Delaware Corp., (hereafter "NNI") pursuant to Fed. R. Civ. P. 56 that there was no genuine issue of material fact, and opposer is entitled to a judgment as a matter of law. TriForest argued that expired utility patents and basic common sense shows that the asserted NNI trade dress is comprised of functional and commonplace features and therefore not registerable.

Functionality of the trade dress is revisited here again in the trial brief. The trademark trial and appeal board previously did not consider the motion for summary judgment, and the arguments in this trial brief roughly parallel the arguments previously made with the addition of some additional evidence.

I. BACKGROUND

TriForest Enterprises, Inc. and the applicant both sell plastic water bottles and are competitors in the marketplace. TriForest previously sold a small number of an old design narrow mouth round bottles but stopped after NNI sent cease and desist letters to TriForest and TriForest dealers.[1] NNI's allegations forced TriForest to make design modifications, such as those seen in Exhibit 12.[2] The new TriForest design is not disputed, but TriForest has a right to sell the old design because it is functional and commonplace.

The pre existing Boston Round shape is in the public domain and can not be monopolized, not even just for the sporting goods sector. There is no way the market can be segmented into specific application for the bottles. TriForest uses it for media, buffer and biochemical production, while Nalgene claims it for only water usage. Whether the bottle is used for outdoor recreation purposes or for laboratory chemicals, customers do not make this

[1] Lin Testimony, Pg. 32 Lines 1-8.
[2] Lin Testimony, Exhibit 12, Page 31.

distinction. The Nalgene word mark is what makes the difference in the mind of the consumer, not shape.

Nalgene took a Boston round laboratory bottle and put a tether cap on it, claiming it as a trademark. Nalgene's Boston round laboratory bottle without a tether cap is shown in Exhibit 10.[3] Exhibit 11 is the same product that TriForest sells with the tether cap.[4]

A side-by-side comparison[5] of the old TriForest bottle and the Nalgene bottle shows that the bottles are not identical. NNI alleges that they are confusingly similar. TriForest denies confusingly similarity. Customers look to the logo printed on the bottle as the main indicator to determine source of goods. Here, anyone can identify the bottles by their printed trademarks on the bottle. Thus, as a matter of law, there cannot be confusing similarity.

II. THE MARK IS A PRODUCT DESIGN WHICH IS FUNCTIONAL

The Boston Round with a functional tether cap should NOT be anyone's trademark.

The mark should have been refused under Trademark Act §2(e)(5), 15 U.S.C. 1052(e)(5) stating, "No trademark by which the goods of the applicant may be distinguished from the goods of others shall be refused registration on the principal register on account of its nature unless it: . . . (e) Consists of a mark which ... (5) comprises any matter that, as a whole, is functional."

The mark is a design configuration that has a utilitarian purpose. TrafFix Devices, Inc. v. Marketing Displays, Inc., 532 U.S. 23, 58 USPQ2d 1001 (2001); Valu Engineering, Inc. v. Rexnord Corp., 61 USPQ2d 1422 (Fed. Cir. 2002); In re Bose Corp., 772 F.2d 866, 277 USPQ 1 (Fed. Cir. 1985); In re R. M. Smith, Inc., 734 F.2d 1482, 222 USPQ 1 (Fed. Cir. 1984); TMEP §1202.02(a) et seq.

---

[3] Lin Testimony, Exhibit 10, Page 27.
[4] Lin Testimony, Exhibit 11, Page 30 Lines 12-21.
5 Lin Testimony, Exhibit 1.

Functionality is an absolute bar to registration. Yurman Design, Inc. v. PAJ, Inc., 262 F.3d 101, 116 (2d Cir. 2001), states that the "nonfunctionality requirement protects competition even at the cost of potential consumer confusion." So strong is the doctrine that even incontestable marks can be canceled on the basis of functionality. Wilhelm Pudenz v. Littlefuse, Inc., 177 F.3d 1204, 1211-1212, "We hold that a trademark registration that has achieved incontestable status under 15 U.S.C. § 1065 is still subject to attack based on functionality."

NNI is trying to get a patent from the trademark office, which is improper. Valu Eng'g, Inc. v. Rexnord Corp., 278 F.3d 1268, 1273 states:

> Morton-Norwich, 671 F.2d at 1336-37, 213 U.S.P.Q. (BNA) at 11-12, the Supreme Court and this court's predecessor have held that mark is not registrable if the design described is functional, because "patent law, not trade dress law, is the principal means for providing exclusive rights in useful product features." Elmer v. ICC Fabricating, 67 F.3d 1571, 1580, 36 U.S.P.Q.2D (BNA) 1417, 1423 (Fed. Cir. 1995). The First Circuit likewise has noted that "trademark and trade dress law cannot be used to evade the requirements of utility patents, nor the limits on monopolies imposed by the Patent Clause of the Constitution." I.P. Lund Trading ApS v. Kohler, 163 F.3d 27, 38, 49 U.S.P.Q.2D (BNA) 1225, 1232 (1st Cir. 1998). Commentators share this view: "trademark law cannot properly make an 'end run' around the strict requirements of utility patent law by giving equivalent rights to exclude." J. Thomas McCarthy, 1 McCarthy on Trademarks and Unfair Competition § 7:64, 7-147 (4th ed. 2001).

The functionality doctrine thus accommodates trademark law to the policies of patent law:

> The functionality doctrine prevents trademark law, which seeks to promote competition by protecting a firm's reputation, from instead inhibiting

> legitimate competition by allowing a producer to control a useful product feature. It is the province of patent law, not trademark law, to encourage invention by granting inventors a monopoly over new product designs or functions for a limited time, 35 U.S.C. §§ 154, 173, after which competitors are free to use the innovation. If a product's functional features could be used as trademarks, however, a monopoly over such features could be obtained without regard to whether they qualify as patents and could be extended forever (because trademarks may be renewed in perpetuity).

NNI's product design describes the mark as[6]:

> The mark consists of a plastic water bottle as shown, namely, a plastic water bottle having a transparent, generally cylindrical container body with rounded shoulders interconnecting the upper and lower extremities of a cylindrical sidewall to a relatively narrow container neck and a generally flat, circular container bottom, respectively; an opaque screw cap releasably engaged with threads on the upper portion of the neck and having a button connected to the center of its top surface via a short stem; and a strap terminating in small and large annular rings respectively encircling the button stem and the lower portion of the neck such that the large annular ring is spaced apart and visually distinct from the screw cap, wherein the ratio of the diameter of the generally cylindrical container body to the overall height of the water bottle is approximately 0.4 and the ratio of the height of the generally cylindrical container body extending between the neck and the container bottom to the overall height of the water bottle is approximately 0.8.

---

6 Lin Testimony, Page 17 Line 15 - Page 18 Line 23, Exhibit 7. See also Exhibit 16.

The NNI description is filled with highly functional words and phrases such as: plastic water bottle; cylindrical container body; narrow container neck; screw cap releasably engaged with threads; strap; and button stem. The highly functional words and phrases make the description sound like a utility patent claim. Because the mark is functional, even a showing of secondary meaning does not remove the absolute bar to registration. TrafFix Devices, Inc. v. Marketing Displays, Inc., 532 U.S. 23, 58 USPQ2d 1001, 1007 (2001).

NNI may counter that the function of all plastic water bottles is to hold water, and that holding water should be a protected de facto functional feature incidental to the claim of trademark protection.

Valu Eng'g, Inc. v. Rexnord Corp., 278 F.3d 1268, 1274 states,

> Our decisions distinguish de facto functional features, which may be entitled to trademark protection, from de jure functional features, which are not." In essence, de facto functional means that the design of a product has a function, i.e., a bottle of any design holds fluid." In re R.M. Smith, Inc., 734 F.2d 1482, 1484, 222 U.S.P.Q. (BNA) 1, 3 (Fed. Cir. 1984). De facto functionality does not necessarily defeat registrability. Morton-Norwich, 671 F.2d at 1337, 213 U.S.P.Q. (BNA) at 13 (A design that is de facto functional, i.e., "'functional' in the lay sense . . . may be legally recognized as an indication of source."). De jure functionality means that the product has a particular shape "because it works better in this shape." Smith, 734 F.2d at 1484, 222 U.S.P.Q. (BNA) at 3. ...
>
> To determine whether a particular product design is de jure functional, we have applied the "Morton-Norwich factors": (1) the existence of a utility patent disclosing the utilitarian advantages of the design; (2) advertising materials in which the originator of

the design touts the design's utilitarian advantages; (3) the availability to competitors of functionally equivalent designs; and (4) facts indicating that the design results in a comparatively simple or cheap method of manufacturing the product. Morton-Norwich, 671 F.2d at 1340-41, 213 U.S.P.Q. (BNA) at 15-16.

There are other bottles that are fairly simple in design that have been registered. NNI would argue that the fact that these bottles hold liquid is a de facto utilitarian function. NNI would cite the Listerine bottle registered as U.S. Trademark Reg. No. 2287138 (Mouthwash Class 3)[7] and maybe the Chanel bottle U.S. Trademark Reg. No. 2382784 (Perfume Class 3).[8]

It is true that the mouth wash bottle and perfume bottle were registered.

Note that the NNI trademark is for the product itself. The Boston Round with a functional tether cap should NOT be anyone's trademark. The drawing page states that it is a, "Plastic water bottle, sold empty, in International Class 21."[9] which would make it a product design. On the other hand, consumers purchase the other bottles primarily to obtain the mouthwash or perfume inside. This would mean that the mouth wash bottle and perfume bottle are product packaging instead of the product itself. The essence of good product packaging is distinctive ornamentation, but the essence of good product design is functionality.

In both cases the structure of the mouth wash bottle and perfume bottle does not provide substantial utilitarian advantages. Looking at the registration certificate of U.S. Trademark Reg. No. 2382784 the perfume bottle has a generic beveled rectangular body, but also has a distinctive cap stopper that also has a beveled architecture.[10] The bottle body bevels are decorative because they add lines and definition to the overall look. The cap does not functionally need to be

---

7 Lin Testimony, Pg. 15 Lines 16-21.
8 Lin Testimony, Pg. 16 Line 25, Pg. 17 Line 3.
9 Lin Testimony, Page 18 Line 2-3, Exhibit 7.
10 Lin Testimony, Exhibit 6.

beveled or oversized as seen in the registration certificate. Furthermore, the bevels join to form decorative facets that are primarily ornamental as opposed to functional.

Similarly, the Listerine bottle as shown in U.S. Trademark Reg. No. 2287138 does not perform better because it has beveled designs.[11] The ornamentation on the perfume and mouth wash bottle costs more to produce, and decreases the potential volume of the bottle. Making the bottle round would increase the volume and contribute to a de jure utilitarian advantage, however, the ornamental style of the perfume and mouth wash bottle does not substantially contribute to any functional advantage.

TriForest argues that these features of the NNI bottle are stated in such a way that they have de jure functionality, in other words, the specific features mentioned in the trademark description are particularly functionally advantageous. It is the recitation of the particular functional advantages that makes the trademark description sound like a patent claim. The particular functional advantages if monopolized by NNI, would limit TriForest's revenue by limiting product design choices.

III. PARTICULAR FUNCTIONAL ADVANTAGES OF THE NNI PRODUCT CONFIGURATION

The functionality issue has been discussed in discovery. The applicant in interrogatory #11 asked the opposer why the opposer adopted the old TriForest design. TriForest responded that these particular features are functionally beneficial. The interrogatory and response is quoted below.

INTERROGATORY NO. 11:

Set forth with specificity the circumstances and all facts regarding, relating or referring to the selection by Opposer of the configurations of the goods identified in

11 Lin Testimony, Exhibit 5.

response to Interrogatory No. 1, and identify all documents related thereto.

RESPONSE TO INTERROGATORY NO. 11:

The applicant has the current statement of the trademark in the trademark Office as: The mark consists of a plastic water bottle as shown, namely, a plastic water bottle having a transparent, generally cylindrical container body with rounded shoulders interconnecting the upper and lower extremities of a cylindrical sidewall to a relatively narrow container neck and a generally flat, circular container bottom, respectively; an opaque screw cap releasably engaged with threads on the upper portion of the neck and having a button connected to the center of its top surface via a short stem; and a strap terminating in small and large annular rings respectively encircling the button stem and the lower portion of the neck such that the large annular ring is spaced apart and visually distinct from the screw cap, wherein the ratio of the diameter of the generally cylindrical container body to the overall height of the water bottle is approximately 0.4 and the ratio of the height of the generally cylindrical container body extending between the neck and the container bottom to the overall height of the water bottle is approximately 0.8.

The opposer designed the original bottle based on a review of various Boston round designs. The opposer then created the original bottle based on efficient engineering principles.

The original bottle is made of plastic because plastic is a good material to make a water bottle. Plastic is generally well accepted as a way of making a bottle. Plastic is relatively inexpensive compared to stainless steel or silver. Plastic is watertight and can seal water within a closed container. Plastic can also be formed with a closure that is threaded and

watertight. Plastic is a petroleum derivative that is relatively abundant compared to metal. The opposer did not make the bottles out of wood, stone or soap because these materials are not as durable. A soap bottle would dissolve in water and a wooden bottle would split and is not well suited for holding a liquid. During the autoclave process, the plastic is particularly well-suited for the construction of the bottle.

The opposer made bottles that were transparent so that users could look into the container and see if there are contents within the container. Transparency of the bottle also provides a user with the opportunity to determine the quantity of liquid within the bottle. Transparency also allows a user to determine if there are color changes or any other types of qualitative change within the bottle. Transparency is particularly useful during hiking because a foreign object could accidentally fall inside the bottle and a user may drink the foreign object by accident if the user could not see inside the bottle. In laboratory tests, a user may see foreign objects that have accidentally fallen inside of the bottle that may change the results of any laboratory tests. In laboratory use, the bottle often has a media inside that is supposed to be sterile. Having a transparent surface allows a laboratory worker to look inside of the bottle to see if there is anything foreign, such as an insect like a mosquito, fly, mayfly or cockroach. The transparency of the bottle is also helpful for a user because the user can see if the bottle is clean. If the bottle is dirty, the user may want to clean the bottle. If the user wants a dirty bottle, having a transparent surface would insure that there is debris in the bottle. Overall, transparent bottles have been in use since early glass bottles. Early glass bottles are ancient.

The bottle is generally cylindrical with rounded shoulders because some machines roll the bottle. Also, the bottle been generally cylindrical with rounded shoulders allows a greater volume to surface area ratio. This is helpful when optimizing construction so that the plastic use is minimized and the strength of the bottle is maximized. The rounded shoulders interconnect with the upper and lower extremities of the cylindrical sidewalls because if they were not connected, the bottle would fall apart and the contents will leak out. It is better that the bottles are made of integrally formed or blown pieces, rather than pieced together from a number of independent interlocking pieces.

The relatively narrow container neck is commonly known as a narrow mouth bottle. The narrow mouth bottle is good because it is easier to pour of the contents or to drink from the bottle. If the mouth is too large, it is easier to spill all over the place. The narrow mouth bottle is a very good configuration. There are a wide number of narrow mouth bottles such as milk bottles. Milk is put into bottles that have a narrow mouth because this makes it easier to pour the milk. Orange juice is also put into bottles that have a narrow mouth because it is easier to pour the orange juice. A variety of liquids can be put into a narrow mouth bottle allowing easier pouring of the contents. This applies to granular media such as sand, or coffee grounds as well. When a person purchases a can of coffee at the store that is in the 5 lb. canned version, the person needs to use the scoop that that can comes with because it is hard to pour out of a can that has a large diameter. The contents will pour out of the middle portion of the mouth, but also out of the sides of the mouth. The stream of contents is proportional to the radius of the bottle opening.

The bottle has a generally flat container bottom that a circular because the bottle is in the shape of a cylinder. The circular bottom is formed by the bisecting plane between the cylinder and a plane. The flat bottom is very helpful. If the bottom is not flat, the bottle has a tendency to tip over. The bottle should not tip over. If the bottle tips over the contents will pour out. Having a flat bottom is the best way to keep the bottle from tipping over. Alternative methods such as using adhesive resin to bond the bottle to a table is not as good because the bottle would become stuck and difficult to remove from a table. The bottle could also be made to have a circular depression such that the bottom of the bottle forms a rim. This is helpful for strength of the bottle. If the bottle has a small circular depression or a broad one, the best way to make the bottle is with a flat bottom.

The screw cap is opaque and engaged with threads on the upper portion of the neck because transparent material is more expensive and difficult to work with on a screw cap. The screw cap should be softer and thus opaque materials are better at forming the screw cap. It would be more expensive to make transparent screw caps because the plastic is more expensive. If a user can see through the wall of the bottle, it is not that big of a deal that the user cannot see through the screw cap. The screw cap engages with threads because it is easier to screw on a bottle cap rather than snap it on. The snap on version is too easily snapped off. The screw configuration is a better way to seal the bottle with certainty.

The screw cap has a button connected to the center of its top surface via a short stem because the screw cap is tethered to the bottle. The tether rotates about the button that

serves as an axis of rotation to retain the tether to the cap. Once the user takes off the cap, the tether is very helpful because otherwise the cap would be lost or roll away. The connection is formed as a button because the button configuration provides a good axial connection while maintaining low weight and cost. The button is essentially a rivet that turns. If the tether were directly formed to the screw cap, the screw cap would stop turning because the tether would bias the screw cap by exerting a clockwise force. Therefore, and axial connection is preferred. The tether connection to the shrink ring was the easiest connection. Other alternatives such as Sonic welding would require additional machinery and production process. The tether connection to the shrink ring provides a manual solution for connection.

The strap terminates in small and large annular rings respectively encircling the button stem and the lower portion of the neck such that the large annular ring is spaced apart and visually distinct from the screw cap, because the small ring is necessary for rotation with the cap, and the large ring is necessary for connection with the shrink ring. The button stem is preferably encircled because that provides a pivotal connection. The strap is visually distinct from the screw cap because they are separate parts. They are separate parts because the screw cap needs to rotate around the mouth of the bottle while the strap remains stationary. If the strap rotates with the screw cap, the strap will interfere with the hand of the user especially if the user is removing or putting the cap on using a single hand. The top ring is smaller because it does not need to be very large for the connection with the cap. Though bottom ring is larger because it must fit around the shrink ring near the base of the bottle. If the top ring were larger than the bottom, the ring would protrude

over the top surface of the cap and hinder the fingers of the user. The top ring should be smaller than the top of the top surface of the cap because the fingers of the user preferably grasp the interface between the top surface of the cap and the side surfaces of the cap. The top ring being in the same size as the top surface of the cap would limit the user to grasping only the side surfaces of the cap. This limitation would prevent a user from tightening the cap as much as a user could have if the user had access to grab more surface area on the cap.

The ratio of the diameter of the generally cylindrical container body to the overall height of the water bottle is approximately .4 because in a 500ml cylindrical container, that ratio produces a circumference that is approximately equivalent to the size of an average person's hand. The .4 ratio is particularly comfortable and easy to hold. If the container were overly long, it would require additional plastic to create and would not be as strong. The overlong container would also not be as strong because is more of a stick shaped container. The 500ml cylindrical container is a standard size. It is half a liter. A liter is a metric size. Metric units are widely adopted in the world. A metric units are particularly helpful in science because all of the unit's are based 10. Dealing with inches and feet, and gallons makes calculations difficult. Therefore, the standard size half liter container is particularly well-suited for a person's hand when .4 ratio is in place.

The ratio of the height of the generally cylindrical container body extending between the neck and the container bottom to the overall height of the water bottle is approximately 0.8 because with the .4 ratio previously mentioned, the cap would be on the order of

several inches in height. Having a cap that produces a .7 ratio would make the cap size overly long and create a long neck that is taller than it is wide. Having a cap that produces a .9 ratio would make the gripping area too small for an average person's fingers. Therefore, the .8 ratio is derived from the .4 ratio which is derived from the combination of the standard size 500ml container in combination with an average person's hand size.

The container is designed to hold water because it is a bottle. Water is the most plentiful liquid on the planet. A wide variety of liquids can be stored within the container. If the container were not designed to hold water, it would not work as well as a container that could hold water. Humans drink water during exercise and on a daily basis. Humans are comprised of a substantial percentage of water weight. Therefore, the opposer designed the bottle to hold water because holding water is a convenient and utilitarian function of a bottle.[12]

IV. CHART OF UTILITARIAN ADVANTAGES

Because of the descriptive nature of the interrogatory response above, the utilitarian advantages may be condensed and organized in a chart format.

MARK DESCRIPTION	UTILITARIAN ADVANTAGES
The mark consists of a plastic water bottle as	Plastic is one of the best materials to make a water bottle. Plastic is inexpensive, durable, watertight, chemically inert resisting

12 Lin Testimony, Exhibit 18, Pg 7-11.

shown, namely,	corrosion, cryogenically freezable, sterilization autoclavable, strong and light. Plastic forms a good water seal.[13]
a plastic water bottle having a transparent,	Transparent bottles allow a user to see inside the container to find foreign objects and see if the bottle is clean. Glass was used in ancient bottles because glass can be transparent.[14]
generally cylindrical container body	A cylindrical container body minimizes material required while maximizing strength. Laboratory machines for mixing often roll a bottle and would not be able to roll a square bottle. Generally cylindrical bottle with rounded shoulders allows a greater volume to surface area ratio and optimizes plastic use.[15] Cylindrical smoothness makes label application and screen printing easier. Grooves cause awkward screen printing discontinuities such as those seen in applicant NNI's Exhibit 40-2.[16]
with rounded shoulders interconnecting the upper and lower extremities of a cylindrical sidewall to a	The rounded shoulders interconnect with the upper and lower extremities of the cylindrical sidewalls to provide good structural integrity.[17] Square shoulders are not as strong and use more material. Round cylinders are particularly strong in proportion to material used because uniform wall thickness and circumference provides even pressure distribution.

13 Lin Testimony, Pg. 18 Line 24 – Pg. 19 Lines 1-9.
14 Lin Testimony, Pg. 19 Lines 18-25 – Pg. 20 Lines 1-3.
15 Lin Testimony, Pg. 20 Lines 4-19.
16 See Lin Testimony, applicant NNI's Exhibit 40-2 shows that grooves interfere with screen printing, making screen printing discontinuous. Water level marker is discontinuous in Exhibit 40-2. The applicant mark does not have this problem because it is functionally simpler.
17 Lin Testimony, Pg. 21 Lines 9-18.

relatively narrow container neck	The relatively narrow container neck also known as a narrow mouth makes it easier to pour from and easier to drink from. A wide mouth is not as good for pouring because contents will pour from the sides of the mouth.
and a generally flat, circular container bottom, respectively;	The flat container bottom is necessarily circular because the bottle is cylindrical. A bisecting plane through a cylinder forms a circular bottom. If the bottom is not flat, the bottle will not stand up.
an opaque screw cap releasably engaged with threads on the upper portion of the neck	The opaque screw cap is cheaper and softer. It would be more difficult to make a transparent cap. Transparent material such as polycarbonate is more expensive, harder, more brittle and would not seal well as a materials that are opaque. Because user can see through the wall of the bottle, the user does not need to see through the screw cap. Finally, a threaded connection is stronger than a snap on connection.[18]
and having a button connected to the center of its top surface via a short stem;	The button is the axial connector between the cap and tether. The button allows the tether to rotate about the button and cap.[19] The button axial connector maintains a low profile to lower bulk, weight and cost. If the tether were directly formed to the screw cap, rotation of the screw cap would move the tether and interfere with a user's hand during cap rotation.[20]
and a strap terminating in	The small ring button connection is necessary for rotation with the

18 Lin Testimony, Pg. 21 Lines 19-25 – Pg. 22 Lines 1-15.
[19] Lin Testimony, Pg. 133 Lines 1-12.
20 Lin Testimony, Pg. 22 Lines 24-25 – Pg. 23 Lines 1-5.

small and large annular rings respectively encircling the button stem and the lower portion of the neck such that the large annular ring is spaced apart and visually distinct from the screw cap,	cap, and the large ring is necessary for connection with the shrink ring. The strap is necessarily visually distinct from the screw cap because they are separate parts. The top ring is smaller to save reduce plastic usage, and be unobtrusive to user grip.[21] A large top ring causes the tether to rotate with the cap such as the tether of Exhibit 32, which rotates with the cap interfering with hand grip.[22] The bottom ring is larger to fit around the shrink ring on the neck. The rings are annular to facilitate rotation. [23]

[21] Lin Testimony, Pg. 132-133.
[22] See Lin Testimony pg. 162, line 6 witness stating, "If you use one hand, the tether turn with it."
23 Lin Testimony, Pg. 23 Lines 17-25 – Pg. 24 Lines 1-9.

wherein the ratio of the diameter of the generally cylindrical container body to the overall height of the water bottle is approximately 0.4 and the ratio of the height of the generally cylindrical container body extending between the neck and the container bottom to the overall height of the water bottle is approximately 0.8.	The ratio of the diameter of the generally cylindrical container body to the overall height of the water bottle is approximately .4 because in a 500ml cylindrical container, that ratio produces a circumference that is approximately equivalent to the size of an average person's hand. The .4 ratio is particularly comfortable and easy to hold. If the container were overly long, it would require additional plastic to create and would not be as strong. The 500ml cylindrical container is a standard size half liter. The standard size half liter container is particularly well-suited for a person's hand and a .4 ratio. [24] The ratio of the height of the generally cylindrical container body extending between the neck and the container bottom to the overall height of the water bottle is approximately 0.8 because with the .4 ratio, the cap would be about several inches in height. Having a cap that produces a .7 ratio would make the cap size overly long and create a long neck that is taller than it is wide. Having a cap that produces a .9 ratio would make the gripping area too small for an average person's fingers. Therefore, the .8 ratio is derived from the .4 ratio which is derived from the combination of the standard size 500ml container in combination with an average person's hand size.

24 Lin Testimony, Pg. 24 Lines 20-25, Pg. 25 Line 1, Pg. 26 Lines 15-24 (These ratios are typical bottle ratios.) Bottle sizes should not be patented via the trademark office.

Also, the simplicity of the NNI alleged trademark reduces the failure rate.[25] The Nalgene grip is a fine grip that is easier to grip.[26]

V. US PATENTS DESCRIBE THE UTILITARIAN ADVANTAGES OF THE NNI CAP, TETHER AND BUTTON CONFIGURATION

United States utility patents are evidence of functionality and show that NNI's alleged trade dress elements are functional.[27] The chart below organizes the patented utility advantages.

MARK DESCRIPTION	PATENTED UTILITARIAN ADVANTAGES
The mark consists of a plastic water bottle as shown, namely, a plastic water bottle	"Conventionally, plastic containers are well known for containing water, gasoline and other liquids ...." (Berney US Patent 4,595,130, Col 1, lines 11-16) [28]
having a transparent, generally cylindrical container body	T.B. Birnbaum U.S. Patent No. 524,159 STOPPER OR COVER FOR THE MOUTHS OF BOTTLES was patented August 7, 1894. and shows a generally cylindrical container body in Figs. 2-3.[29] In 1894, 112 years ago, glass bottles were generally known to be transparent.
with rounded shoulders	T.B. Birnbaum Figs. 2-3 show rounded shoulders interconnecting

[25] Lin Testimony, Page 32 Lines 12-20.
[26] Lin Testimony, Page 33 Lines 11-14. See also Lin Testimony, Page 155 Lines 8-13.
27 "The existence of a valid functional patent disclosing the utilitarian advantages of the configuration in question is very strong, if not conclusive, evidence of the functionality of the configuration" McCarthy's on Trademarks and Unfair Competition at §7:88, page 7-238, rev 12/2000.
28 Lin Testimony, Exhibit 2.
29 Lin Testimony, Exhibit 3.

interconnecting the upper and lower extremities of a cylindrical sidewall to a	with the upper and lower extremities of the cylindrical sidewalls to provide good structural integrity.[30]
relatively narrow container neck and a generally flat, circular container bottom, respectively;	Birnbaum Figs. 2-3 show a relatively narrow container neck also known as a narrow mouth for easy pour. Although the patent does not show the bottle bottom, it would generally be understood that the bottle bottom was circular and flat. [31]
an opaque screw cap releasably engaged with threads on the upper portion of the neck	US Patent 4,526,289 to Schiemann shows an opaque screw cap and claims it also as, "5. Screw stopper according to claim 1, wherein the external threads and internal threads have a diameter of about 30 to 50 mm. with a pitch of about 5 mm. and extend axially over about 15 to 25 mm., and the collar extends radially about 2 mm. beyond the external threads and the collar and the cylinder wall have an axial extent of about 5 mm." (col 4, lines 42-48)[32]
and having a button connected to the center of its top surface via a short stem;	NNI trademark application element "having a button connected to the center of its top surface via a short stem" is functional. The button connection is described in Berney US Patent 4,595,130 issued Jun 17, 1986 now expired. "A flexible tether 27 includes a loop 28 at one end engaging an annular groove 29 adjacent the upper side 19 of the cap and having a further loop 30 engaging an

30 Id.
31 Id.
32 Lin Testimony, Exhibit 4.

	annular groove 31 around the base of the pouring neck 11 thus permitting the cap to be rotated freely yet anchoring same to the container 10." (US Patent 4,595,130, Col 3, lines 33-38) Here the NNI button is formed in the Berney patent as "an annular groove 29 adjacent the upper side 19 of the cap". [33]
and a strap terminating in small and large annular rings respectively encircling the button stem and the lower portion of the neck such that the large annular ring is spaced apart and visually distinct from the screw cap,	Loop 28 of the Berney '130 patent is the NNI small annular ring and loop 30 of the patent is the NNI large annular ring. Fig. 5 of the patent shows a button 19 rising on a short stem forming a groove 29 (US Patent 4,595,130, Fig. 5, sheet 4 of 5) Loop 28 of the Berney patent is smaller than loop 30 making Loop 28 the small annular ring and loop 30 the large annular ring. As seen in Fig. 2 of the '130 patent, the ring is visually distinct from the screw cap, screw cap is necessarily be visually distinct from the annular ring, because they are separate pieces.[34] T.B. Birnbaum U.S. Patent No. 524,159 Figs. 2-3 also shows a large annular ring B encircling the lower portion of the neck such that the large annular ring B is spaced apart and visually distinct from the screw cap. "A is the rubber thimble or cap , B is the rubber ring adapted to be placed about the neck of a bottle, and C a

33 Lin Testimony, Exhibit 2.
34 Id.

	string for securing the rubber cap and ring together." (T.B. Birnbaum, col 2, lines 56-59) [35]

VI. THE NNI PRODUCT RATIOS ARE ORDINARY AND COMMON RATIOS FOR BOSTON ROUND PLASTIC WATER BOTTLES

Commonplace product configuration cannot become a trademark. The Boston Round with a functional tether cap should NOT be anyone's trademark. NNI claims a 0.4 diameter to height ratio and a 0.8 neck height to total height ratio. Note that the neck height begins from the bottom of the neck. Regarding the main body ratios, they have been ordinary and common for Boston Rounds that have been in the marketplace for many years. There are many companies such as Owens-Illinois, and Brockaway Glass who have been manufacturing such bottles since early 1960's. The Owens-Illinois website shows the Boston round.[36]

Additionally, the Bomatic, Inc. website has an illustration of the Boston Round bottle: The drawing below was copied from www.bomatic.com/Catalog/boston_pvc_18oz.html[37]

35 Lin Testimony, Exhibit 3.
36 http://www.o-i.com/pkgsolutions/healthcaremed/healthcare/glasspkgoverview.asp
37 Lin Testimony pg. 25, line 26, Exhibit 8

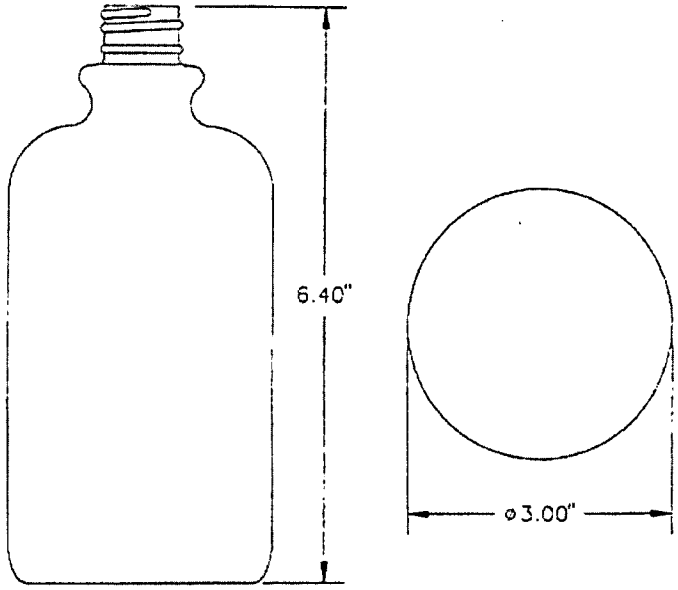

The bottle of Bomatic, Inc. hereafter (BMI) has the general proportions of the claimed NNI trademark. The diameter to height ratio is basically the same. The BMI ratio is 3" ÷ 6.4" = .47 ratio, which would be close to NNI's .4 ratio.

Note that the drawing indicates a label area which coincides with the cylindrical portion of the bottle. The drawing below is from www.mayfairplastics.com/drawings/Boston16a1.gif[38]

[38] Lin Testimony, Exhibit 9.

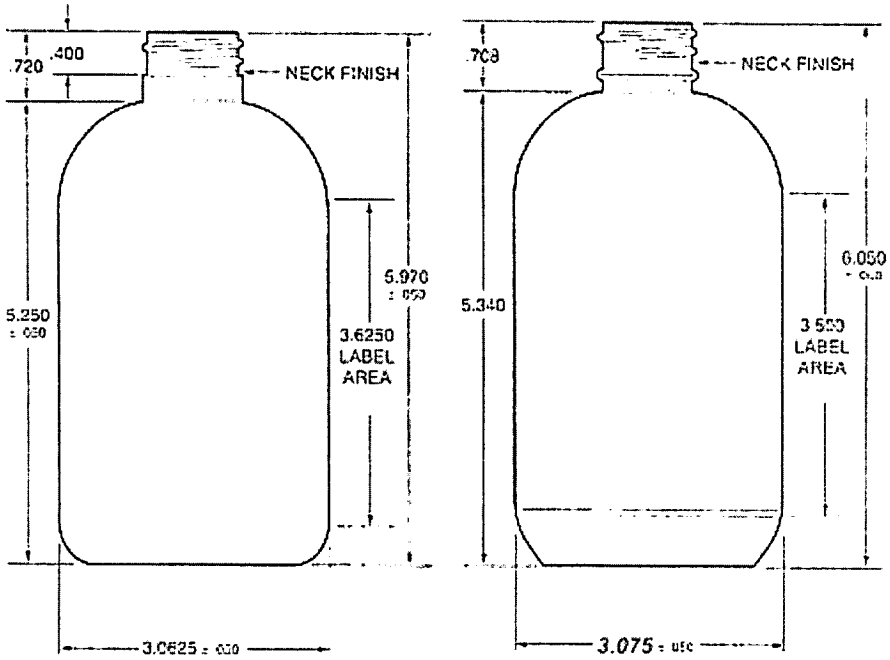

Material: HDPE
Neck Finish: 28/410
Weight: 30 grams
Bulk Pack: 175 Box w/Liner
Box Size: 23 x 15 7/16 x 29 7/8 in.
Box Weight: 15 lbs.

SPI Tolerances Apply
Unless Otherwise Noted

The Boston Round can be a plastic water bottle and can be made transparent. The Boston Round with a functional tether cap should NOT be anyone's trademark. It has a generally cylindrical container body with rounded shoulders interconnecting the upper and lower extremities of a cylindrical sidewall to a relatively narrow container neck. It also has a generally flat, circular container bottom. The Boston round typically includes an opaque screw cap releasably engaged with threads on the upper portion of the neck. [39]

The Boston round has a ratio of the diameter of the generally cylindrical container body to the overall height of the water bottle of approximately 0.4 and the ratio of the height of the generally cylindrical container body extending between the neck and the container bottom to the

39 Lin Testimony, Exhibit 9, Pg. 25 Lines 18-25.

overall height of the water bottle is approximately 0.8. The Mayfair Plastics Boston round shown in the drawing above has a diameter high ratio of about 0.5 and an overall height neck height ratio of about 0.9.[40] This is within the range of being confusingly similar to the Nalgene alleged trade dress. NNI's 0.4 diameter to height ratio and a 0.8 neck height to total height ratio are standard. The ratios are functionally necessary to fit bottles into standard laboratory machines, packaging machines, and related bottle holders.

Even if the ratios were not standard, they are too basic to be trade dress. McCarthy's on Trademarks and Unfair Competition states, "Simple, cylindrical containers have often been held to be merely utilitarian and functional. The First Circuit held that a 'prosaic' cylindrical container for crackers was functional and unprotectable and noted that if the law were not so, the unacceptable result would be that 'the first user of a container such as the now-standard soup can, potato chip bag, or cracker box would be able to preclude competitors from using these highly functional containers.'"[41]

A round bottle is automated labeling machine friendly. It allows labels to be adhered by uniform rotation.[42] A simple cylindrical bottle is less expensive to make than bottles with several curves, textures, and angles. Every feature in plastic production is an engineering complication.

VII. CONCLUSION

Free competition is an important public policy. The Boston Round with a functional tether cap should NOT be anyone's trademark. As the court stated in Valu Engineering, Inc. v.

---

40 Id.
41 McCarthy's on Trademarks and Unfair Competition at §7:87, page 7-235, rev 12/2000.
42 Lin Testimony, Pg. 20 Lines 6-12

Rexnord Corp., 61 USPQ2d 1422 (Fed. Cir. 2002):

> An important policy underlying the functionality doctrine is the preservation of competition. As this court's predecessor noted in Morton-Norwich, the "effect upon competition 'is really the crux'" of the functionality inquiry, 671 F.2d at 1341, 213 U.S.P.Q. (BNA) at 16, and, accordingly, the functionality doctrine preserves competition by ensuring competitors "the right to compete effectively." Id. at 1339. As we stated in Brunswick Corp. v. British Seagull Ltd., 35 F.3d 1527, 1531, 32 U.S.P.Q.2D (BNA) 1120, 1122 (Fed. Cir. 1994), "functionality rests on 'utility,' which is determined in light of 'superiority of design,' and rests upon the foundation of 'effective competition.'" The importance of competition was reaffirmed in Qualitex, in which the Supreme Court focused on whether a feature "would put competitors at a significant non-reputation-related disadvantage." Qualitex, 514 U.S. at 165. And when discussing the policy behind limiting trade dress protection, the Supreme Court in TrafFix noted that "allowing competitors to copy will have salutary effects in many instances." TrafFix, 121 S. Ct. at 1260.

The Boston Round with a functional tether cap should NOT be anyone's trademark. The mark is functional and basically just a general use bottle with a tether screw cap. Design arounds require modification to the basic design. The mark in exhibit 16 is the simplest and most efficient basic tether cap connection plastic water bottle. Other designs not considered infringing as seen in Exhibit 15 are substantially more complicated. The Eddie Bauer bottle of Exhibit 15 has hand grooves the body sides, and the Starbucks bottle has indentations on the lower half of the body. Finally, the opposer bottle made for Timberland of Exhibit 15 has ribs on the shoulder. Therefore, to avoid infringement, competitors must add substantial complicated additional

features to the basic design. The opposer Triforest's minor cosmetic changes as seen in the side by side comparison in Exhibit 1 is alleged by the applicant as insufficient to design around the Nalgene claimed trade dress also seen in Exhibit 1.

The Boston Round with a functional tether cap should NOT be anyone's trademark. The Trademark Act is not a 35 U.S.C. §102(b)[43] loophole. If the applicant has the trademark as claimed, designing around the trade dress would entail giving up at least one of the claimed utilitarian benefits of the trade dress. The applicant has presented a wide variety of water bottle configurations as shown as in Exhibits 19 through 45. None of these bottles is a regular Boston round bottle. Opposer simply wants to be able to make the regular Boston round bottle with a tether cap connected by a sonically welded button. Opposer should not have to add ornamentation, change bottle shape or adopt a wide loop top to do this since the fundamental design is functional and the most simple. Therefore, the opposer prays that the applicant be denied registration under Trademark Act §2(e)(5), 15 U.S.C. §1052(e)(5).

Triforest has various objections such as relevancy regarding applicant witness testimony and reserves these objections until the response to NNI's trial brief.

Respectfully submitted,

By Clement Cheng, Esq. _____ Date: Dec 22/2008
17220 Newhope St., Suite 127
Fountain Valley, CA 92708
Phone: (714) 825-0555

Attorney for Opposer

---

43 35 U.S.C. §102 "A person shall be entitled to a patent unless ... (b) the invention was patented or described in a printed publication in this or a foreign country or in public use or on sale in this country, more than one year prior to the date of the application for patent in the United States, or"

PROOF OF SERVICE

In the matter of trademark application Serial No. **76/572,253**

I, the undersigned, declare I am over the age of 18 and not a party to this action. My business address is at 17220 Newhope St., Suite 127 Fountain Valley, CA 92708.

On December ~~13~~ 22, 2006, I served:

OPPOSER'S TRIAL BRIEF

By placing true copies thereof in a sealed envelope, addressed as follows to:

1 copy sent to:
DONALD F. FREI
WOOD, HERRON & EVANS, L.L.P.
2700 CAREW TOWER
441 VINE STREET
CINCINNATI, OH 45202-2917
ATTORNEY FOR APPLICANT

1 copy sent to:
Mail Stop TTAB
Assistant Commissioner for Trademarks
P.O. Box 1451
Alexandria, VA 22313-1451

☐ BY PERSONAL SERVICE: I caused such envelope to be delivered by hand to the offices of the addressee(s).

☒ BY MAIL: I am readily familiar with the practice of the office for collection and processing of correspondence for mailing with the United States Postal Service. Under that practice, correspondence is put in the office outgoing mail tray for collection and is deposited in the U.S. Mail that same day in the ordinary course of business. I am aware that, on motion of the party served, service is presumed invalid if the postal cancellation date or postage meter date is more than one (1) day after the date of deposit for mailing shown on this proof of service.

☒ FEDERAL: I declare under penalty of perjury under the laws of the United States that the foregoing is true and that I am employed in the office of a member of the Bar of this Court at whose direction the service was made.

☐ STATE: I declare under penalty of perjury under the laws of the State of California that the foregoing is true and correct.

Executed on December ~~13~~ 22, 2006, at Fountain Valley, California.

signer

PROOF OF SERVICE

In the matter of trademark application Serial No. **76/572,253**

I, the undersigned, declare I am over the age of 18 and not a party to this action. My business address is at 17220 Newhope St., Suite 127 Fountain Valley, CA 92708.

On January 3, 2007, I served:

OPPOSER'S TRIAL BRIEF

By placing true copies thereof in a sealed envelope, addressed as follows to:

1 copy sent to:
DONALD F. FREI
WOOD, HERRON & EVANS, L.L.P.
2700 CAREW TOWER
441 VINE STREET
CINCINNATI, OH 45202-2917
ATTORNEY FOR APPLICANT

1 copy sent to:
Mail Stop TTAB
Assistant Commissioner for Trademarks
P.O. Box 1451
Alexandria, VA 22313-1451

☐ BY PERSONAL SERVICE: I caused such envelope to be delivered by hand to the offices of the addressee(s).

☒ BY MAIL: I am readily familiar with the practice of the office for collection and processing of correspondence for mailing with the United States Postal Service. Under that practice, correspondence is put in the office outgoing mail tray for collection and is deposited in the U.S. Mail that same day in the ordinary course of business. I am aware that, on motion of the party served, service is presumed invalid if the postal cancellation date or postage meter date is more than one (1) day after the date of deposit for mailing shown on this proof of service.

☒ FEDERAL: I declare under penalty of perjury under the laws of the United States that the foregoing is true and that I am employed in the office of a member of the Bar of this Court at whose direction the service was made.

☐ STATE: I declare under penalty of perjury under the laws of the State of California that the foregoing is true and correct.

Executed on January 3, 2007, at Fountain Valley, California.

signer