ESTTA Tracking number: **ESTTA692164**
Filing date: **08/27/2015**

IN THE UNITED STATES PATENT AND TRADEMARK OFFICE
BEFORE THE TRADEMARK TRIAL AND APPEAL BOARD

Proceeding	92058315
Party	Plaintiff State of Michigan
Correspondence Address	TONI L HARRIS TRANSPORTATION DIVISION VAN WAGONER BLDG, 425 W OTTAWA 4TH FLOOR LANSING, MI 48913 UNITED STATES harrisT19@michigan.gov, lubitzs@michigan.gov
Submission	Motion for Summary Judgment
Filer's Name	Toni L. Harris
Filer's e-mail	harrist19@michigan.gov, lubitzs@michigan.gov
Signature	/s/ Toni L. Harris
Date	08/27/2015
Attachments	MDOTs MSJ 082615.pdf(231308 bytes) Ex 1.pdf(455047 bytes) Ex 2.pdf(800930 bytes) Ex 3.pdf(2121143 bytes) Ex 4.pdf(143500 bytes) Ex 5.pdf(318120 bytes) Ex 6.pdf(303680 bytes) Ex 7.pdf(524292 bytes) Ex 8.pdf(238366 bytes) Ex 9.pdf(123445 bytes) Ex 10.pdf(669907 bytes) Ex 11.pdf(77688 bytes) Ex 12.pdf(808881 bytes) Ex 13.pdf(1025645 bytes) Ex 14.pdf(160032 bytes) Ex 15.pdf(187047 bytes) Ex 16.pdf(65991 bytes) Ex 17.pdf(61153 bytes) Ex 18.pdf(91928 bytes) Ex 19.pdf(87369 bytes) Ex 20.pdf(304614 bytes) Ex 21.pdf(166128 bytes) Ex 22.pdf(159755 bytes) Ex 23.pdf(394301 bytes) Ex 24.pdf(691337 bytes) Ex 25.pdf(129924 bytes) Ex 26.pdf(611989 bytes) Ex 27.pdf(1506679 bytes) Ex 28.pdf(1554103 bytes) Ex 29.pdf(878051 bytes)

IN THE UNITED STATES PATENT AND TRADEMARK OFFICE
BEFORE THE TRADEMARK TRIAL AND APPEAL BOARD

State of Michigan	)	
	)	
Petitioner,	)	Reg. Nos.: 3992159
	)	3348635
	)	
v.	)	
	)	
M22, LLC	)	Proceeding: 92058315
	)	
Respondent.	)	
	)	
_____	)	

PETITIONER STATE OF MICHIGAN'S
COMBINED MOTION FOR PARTIAL SUMMARY JUDGMENT
AND BRIEF IN SUPPORT

Petitioner, State of Michigan (State), by and through its attorneys, Bill Schuette, Attorney General, and Toni L. Harris, Assistant Attorney General, hereby moves for partial summary judgment under Fed. R. Civ. P. 56 on its claim that Respondent's marks at issue in this Proceeding, which are virtually identical to the State's trunkline highway route marker, are not protectable as trademarks under 15 U.S.C. §§ 1051, 1052 and 1127, 23 C.F.R. 655.603(a) and the Manual on Uniform Traffic Control Devices (MUTCD), and, therefore, have not been lawfully in use in commerce by Respondent so as to be eligible for trademark protection. Accordingly, Respondent's registrations must be canceled.

In support of its Motion, the State of Michigan states as follows:

INTRODUCTION

The State has used its current state trunkline highway sign, e.g. –

– since 1973 when the State first included its white diamond on a black background design in an approved supplement to the MUTCD promulgated by the United States Department of Transportation, Federal Highway Administration (FHWA). To remain eligible for federal highway and highway safety program funds, each state must adopt the federal MUTCD, with the option of including a supplement approved by the Secretary of Transportation, or a state MUTCD that is in "substantial conformance" with the federal MUTCD and approved by the Secretary of Transportation. Standards, i.e. mandatory conduct, as set forth in the MUTCD, are incorporated by reference in the Code of Federal Regulations and have the force and effect of law.

In 2003, after notice-and-comment rulemaking, the federal MUTCD was amended to include a Standard requiring that traffic control devices contained therein were in the public domain and *not protectable by a trademark*, with the exception of the Interstate Shield and other items owned by FHWA. In fact, when faced with the decision of whether to include in the MUTCD a particular sign that was the subject of a trademark registration owned by a private entity, FHWA decided to not include the sign so that the trademark owner would not be forced to relinquish its trademark rights as required upon publication in the Manual.

In 2005, the State adopted the 2003 edition of the MUTCD as well as a FHWA-approved supplement that replaced the MUTCD's suggested state highway

sign design, comprising a black square with a round circle and highway number, with the State's distinctive state trunkline highway route sign incorporating a white diamond on a black square with "M" and the highway number in block lettering within the diamond. In doing so, pursuant to the clear and unambiguous language of the MUTCD Standard, the State's diamond design sign was deemed not protectable by a trademark. This same language remains in effect today, as it was carried over to the 2009 edition of the MUTCD adopted by Michigan in 2011 with an FHWA-approved supplement that, again, included the State's diamond design for the state trunkline route marker, e.g.

.

In August 29, 2006, Respondent applied to register a federal trademark on the State's distinctive state route design with "M22online.com" below the sign in nearly indiscernible print, i.e.

. In May 2010, Respondent filed a second application for registration of a mark, i.e.

, that the Trademark Examining Attorney rejected, in part, because it was used in "exactly the way the Michigan Department of Transportation uses 'M22' in its road signs for this highway." Respondent did not dispute the Examiner's findings, but rather asserted acquired distinctiveness. The marks were protected as trademarks through registration on the Principal Register, in violation of federal regulations, and Respondent has threatened to enforce the marks against others.

The issue before the Board is whether, under 15 U.S.C. §§ 1051, 1052 and 1127, 23 C.F.R. 655.603(a) and the MUTCD, Respondent's registrations must be canceled. The answer is unequivocally "yes." If Respondent's registrations are

permitted to stand, the State will be at risk of having to remove the diamond design sign, which it has used in its current form for more than four (4) decades, from the MUTCD, or of losing federal funding because, as a registered mark, it is no longer compliant with federal regulations. If the sign is no longer in the MUTCD, then it is not subject to the federal regulations required of a trunkline highway built or maintained, at least in part, by federal funds. In Michigan, every state trunkline highway is built or maintained with the help of federal funds. Consequently, the State would be at risk of losing federal funds for using a sign that is not subject to the federal regulations contained in the MUTCD, or alternatively, the State could be faced with having to adopt and implement a new sign design for the thousands of miles of trunkline state highways throughout Michigan. Of course, any new sign would be subject to the MUTCD, and not protectable by a trademark – unless Respondent or others obtain a federal registration on the sign – at which point, the State will be required to design another new sign, and so on, and so on. Respondent's position is untenable, and State is entitled to summary judgment as a matter of law.

STANDARD OF REVIEW

In reviewing a motion for summary judgment under Fed. R. Civ. P. 56(c), the Board applies the same standard as the federal courts. *Campbell v. Bassani Mfg.*, 368 Fed. Appx. 133, 134 (Fed. Cir. 2010) (affirming the Board's entry of summary judgment that the mark was generic and, therefore, not registrable). In other words, summary judgment is appropriate when, drawing all justifiable inferences in

the nonmovant's favor, the pleadings, depositions, documents, electronically stored information, interrogatories, admissions, affidavits, or other materials in the record, demonstrate that there are no genuine disputes of material fact and the movant is entitled to judgment as a matter of law. See Fed. R. Civ. P. 56; see also *Celotex Corp. v. Catrett*, 477 U.S. 317, 322 (1986).

FACTS

Since the early 1900s, the State of Michigan's standard trunkline route marker has been the shape of a diamond with a block letter "M" in the upper corner and the route number in the lower corner. (Ex. 1.) In 1913, the State's trunkline highway known as "M-22" was established as the first state trunkline passing through the Michigan counties of Benzie, Leelenau, and Manistee. (Ex. 2, p. 139.) In 1919, Michigan began designating and signing its state trunkline highways using the diamond-shaped route marker. (Ex. 1.)

From the early 1970s, when the United States federal government updated the MUTCD to standardize road signs[1], through the present, the State, with FHWA's approval, has incorporated its diamond-shaped route marker in the MUTCD by supplement. Over the last four decades, the sign has remained relatively unchanged. (Ex. 1; Ex. 3.) Further, as explained more fully below, the State has continuously used the FHWA-approved sign to designate roads and to market and encourage tourism in northwest Michigan.

[1] In 1935, the first Manual on Uniform Traffic Control Devices was published and approved as an American Standard. (Ex. 4, p. 3.) In 1971, the FHWA began administering the MUTCD and published a rewritten version of the manual. (Ex. 4, p. 3; Ex. 8, p. I-1.)

In the mid-1980s, the State of Michigan Department of Transportation, in conjunction with then-Michigan First Lady Paula Blanchard acting as an advisor to the Michigan Department of Commerce, devised a route that was designated as the Great Lakes Circle Tour, a scenic road system connecting all of the Great Lakes and the St. Lawrence River. The M-22 trunkline route was included in the Lake Michigan Circle Tour completed in 1986. (Ex. 5.) Great Lakes Circle Tour signs and Lake Michigan Circle Tour signs are displayed and advertised with the M-22 state trunkline route sign. (Ex. 5.)

In 1993, the Michigan Heritage Route Program, created by Public Act 69 of 1993, was established to identify, inventory, protect, enhance, and promote state trunklines and adjacent land with distinctive or unique scenic, cultural, or historic qualities. (Ex. 6.) A Scenic Heritage Route is one with areas of "outstanding natural beauty whose features include, but are not limited to, significant natural features such as vegetation, land form, water, and open areas with exceptional vistas and views that singly or in combination make that area unique and distinct in character." (Ex. 6, MCL 247.951(f).)

By its terms, the intent of Public Act 69 is to provide the State with authority to maintain and enhance the scenic roadways and surrounding areas:[2]

> [E]stablish the state's responsibility for the enhancement and enjoyment of Michigan's scenic, recreational, and historic resources along its roadside by identifying and designating certain portions of the state trunk line highway system as a Pure Michigan byway . . .

[2] In 2014, the designation "Scenic Heritage Route" was rebranded as "Pure Michigan Byway." In accordance with MCL 247.957a, the State is in the process of replacing the Scenic Heritage Route signs posted along the M-22 route with a new marker identifying it as a Pure Michigan Byway. (Ex. 5, MCL 247.957a.)

> [and] to provide criteria for the location and length of Pure Michigan byways and adjacent areas requiring continuing and careful coordination of planning, design, construction, maintenance, land use, and development, by state and local agencies as appropriate, to encourage adjacent land use consistent with the intent of the designation.

(Ex. 6, MCL 247.952.)

Under the Act, a Heritage Route is one to which the old adage "getting there is half the fun" applies:

> Certain portions of the state trunkline highway system are so uniquely endowed by natural aesthetic, ecological, environmental, and cultural amenities immediately adjacent to the roadside that their use by a larger percentage of the motoring public, particularly during the recreational season, is for the experience of traveling the road rather than as a route to a destination. . . . The improvement philosophy for these roads is to maintain the essential elements of the road and the area immediately surrounding the road that create its unique character.

(Ex. 6, MCL 247.953.)

In 2001, the State of Michigan designated approximately 60 miles of the M-22 state trunkline route as the M-22 Scenic Heritage Route. (Ex. 7.)

In 2003, the MUTCD, which is incorporated by reference in 23 C.F.R. § 655.601(d), was revised to include a Standard requiring that any traffic control device design contained in the MUTCD "shall be considered to be in the public domain" and "shall not be protected by a patent, trademark, or copyright, except for the Interstate Shield and any other items owned by FHWA." (Ex. 8.) In 2005, pursuant to 23 C.F.R. 655.603, Michigan adopted the 2003 edition of the MUTCD along with a supplement that included the same diamond design state trunkline highway sign that was included in the MUTCD adopted and supplemented by

Michigan in 1973. (Ex. 9; Ex. 10; Ex. 11, p. 17.) The FHWA approved the State's supplement to the 2003 MUTCD, and the diamond design sign was deemed not protectable as a trademark. (Ex. 9.) In 2009, the FHWA published an updated MUTCD having the same language requiring that any sign designs in the manual are not protectable as a trademark. (Ex. 12, p. I-1.) In 2011, Michigan adopted the 2009 version of the MUTCD, including the same state trunkline route marker in a supplement approved by the FHWA, and it remains in effect today, i.e.

. (Ex. 13; Ex. 14.)

In August 29, 2006, Respondent applied to register a federal trademark on the State's diamond state route design -

- with "M22online.com" below the sign in "tiny" print, as described by the Trademark Examiner (Serial No. 78963038). See May 2, 2007 Office Action. The mark was registered on December 4, 2007 without any reference to or consideration of federal regulations prohibiting trademark protection for the State's route marker design (Registration No. 3348635).

In May 2010, Respondent filed a second application for registration of a mark -

- that the Trademark Examining Attorney determined was used in "exactly the way the Michigan Department of Transportation uses 'M22' in its road signs for this highway" (Serial No. 85041051). Respondent did not dispute that the Examiner's finding, but rather made a new claim of acquired distinctiveness. The mark was registered on July 12, 2011, again without reference to or consideration of

the applicable federal regulations prohibiting trademark protection for the State's road sign design (Registration No. 3992159).

ARGUMENT

I. Clear and unambiguous federal law prohibits trademark protection for the State's trunkline highway route marker which is included in the MUTCD as supplemented by Michigan with FHWA approval.

When determining whether the State's traffic control device is protectable as a trademark, the USPTO must look to controlling statutes and regulations in accordance with Section 1205 of the Trademark Manual of Examining Procedure (TMEP) (5th ed. 2007):

> Various federal statutes and regulations prohibit or restrict the use of certain words, names, symbols, terms, initials, marks, emblems, seals, insignia, badges, decorations, medals and characters adopted by the United States government or particular national and international organizations. These designations are reserved for the specific purposes prescribed in the relevant statute and must be free for use in the prescribed manner.

TMEP5th 1205.01.

As set forth more fully below, after notice-and-comment rulemaking, the Standards of the MUTCD are incorporated by reference in the Code of Federal Regulations and, therefore, have the force and effect of law. The Standard at issue here clearly and unambiguously renders any sign included in the MUTCD not protectable by a trademark. Further, the FHWA's interpretation of this Standard, issued during notice-and-comment rulemaking, clarifies that the provisions apply to public and private parties. The State's trunkline highway route marker has been

included in the MUTCD via an FHWA-approved supplement. Thus, as a matter of law the sign is not protectable as a trademark, and Respondent's marks must be canceled.

A. Under applicable statutes and regulations, as interpreted by FHWA, the State diamond design sign is not protectable as a trademark and, therefore, Respondent's registrations must be canceled.

1. The MUTCD, as supplemented by Michigan with FHWA approval, has the force and effect of law.

Title 23 of the United State Code (the Act) is directed to highways. 23 U.S.C. §§ 101 *et seq*. The Federal-Aid Highway Act, 23 U.S.C. §§ 101-170 (2011), "establishes a cooperative federal-state program for the development of safe, efficient and economical roads. Under the Act, states which obtain federal funds are subject to close federal supervision to insure that the highways built meet safety standards acceptable to the United States Government." *Center for Auto Safety v. Bowers*, 466 F. Supp. 829, 831 (D.D.C. 1979). According to 23 U.S.C. 109(d):

> (d) On any highway project in which Federal funds hereafter participate, or on any such project constructed since December 20, 1944, the location, form and character of informational, regulatory and warning signs, curb and pavement or other markings, and traffic signals installed or placed by any public authority or other agency, shall be subject to the approval of the State transportation department with the concurrence of the Secretary, who is directed to concur only in such installations as will promote the safe and efficient utilization of the highways.

Under 23 U.S.C. § 315, Congress delegated to the Secretary of Transportation (Secretary) the authority to "prescribe and promulgate all needful rules and regulations for carrying out the provisions" of the Act. *City of Cleveland v. Ohio*,

508 F.3d 827, 843 (6th Cir. 2007). The Secretary does so through the Department of Transportation, Federal Highway Administration (FHWA). See *Center for Auto Safety*, *supra* at n. 2 (confirming that the Secretary "has delegated his duties pertaining to the Federal-Aid Highway Act to the . . . Federal Highway Administration.")

"The power of an administrative agency to administer a congressionally created . . . program necessarily requires the formulation of policy and making of rules to fill any gap left, implicitly or explicitly, by Congress." *Chevron, U.S.A., Inc. v. Natural Resources Defense Council, Inc.*, 467 U.S. 837, 843 (1984) (quoting *Morton v. Ruiz*, 415 U.S. 199, 231 (1974)). Where, as here, "Congress has 'explicitly left a gap for an agency to fill, there is an express delegation of authority to the agency to elucidate a specific provision of the statute by regulation,' and any ensuing regulation is binding in the courts unless procedurally defective, arbitrary or capricious in substance, or manifestly contrary to the statute." *U.S. v. Mead*, 533 U.S. 218, 227 (2001); see also *Chevron*, 467 U.S. at 844. A government agency's regulations that have been published in the Code of Federal Regulations, and its interpretative rules, have the force and effect of law. *Perez v. Mortgage Bankers Ass'n.*, 135 S.Ct. 1199, 1203-1204 (2015) (explaining that regulations and interpretive rules issued under the "notice-and-comment rulemaking" have the force and effect of law).

With Congress's explicit delegation to the Secretary, and thereby to FHWA, to promulgate rules and regulations to "promote the safe and efficient utilization of

the highways," as set forth in 23 U.S.C. §§ 109(d) and 315, the FHWA issued regulations pertaining to "Traffic Control Devices on Federal-Aid and Other Streets and Highways." 23 C.F.R. §§ 655.601 *et seq*. Under 23 C.F.R. § 655.601(d), "[t]he standards required in this section are incorporated by reference in this section . . . [,]" including the Manual on Uniform Traffic Control Devices (MUTCD).[3] Thus, the Standards of the MUTCD, as approved by FHWA, are incorporated by reference in Title 23, Part 655 and, therefore, have the force and effect of law and are given controlling weight unless they are "arbitrary or capricious in substance, or manifestly contrary to the statute." *U.S. v. Mead*, 533 U.S. at 227.

According to 23 C.F.R. § 655.603(a), the MUTCD approved by FHWA is the "National MUTCD" which "is the national standard for all traffic control devices installed on any street, highway, or bicycle trail open to public travel in accordance with 23 U.S.C. 109(d) and 402(a)." To qualify for federal funding, Michigan adopts the MUTCD, and supplements thereto, with approval by FHWA Division Administrators. 23 C.F.R. § 655.603(b). Any supplement "shall be in substantial conformance with the National MUTCD," meaning the "supplement shall conform as a minimum to the standard statements included in the National MUTCD." *Id.*

2. The National MUTCD, as adopted and supplemented by the State with FHWA approval, precludes trademark protection for Michigan's diamond design state route sign.

[3] To the extent the Board considers Congress's delegation to be implicit rather than explicit, the Board "may not substitute its own construction of a statutory provision for a reasonable interpretation made by the administrator of an agency." *Chevron, U.S.A., Inc. v. Natural Resources Defense Council, Inc.*, 467 U.S. 837, 844 (1984).

The first MUTCD was published in 1935, and in November 1935 the first edition was approved as the American standard; the manual has been revised nearly every decade to reflect the growth and change of the country. (Ex. 4, pp. 2-3.) The FHWA has administered the MUTCD since the 1971 edition. (Ex. 2, MUTCD, December 2001 ed., p. I-1.) In 1971, the MUTCD was rewritten to include the addition of the definitions of "should," "shall," and "may" requirements:

> In the Manual sections dealing with the design and application of traffic control devices, the words "shall," "should" and "may" are used to describe specific conditions concerning these devices. To clarify the meanings intended in this Manual by use of these words, the following definitions apply:
>
> 1. SHALL – A mandatory condition. Where certain requirements in the design or application of the device are described with the "shall" stipulation, it is mandatory when an installation is made that these requirements be met.
> 2. SHOULD – An advisory condition. Where the word "should" is used, it is considered to be advisable usage, recommended but not mandatory.
> 3. MAY – A permissive condition. No requirement for design or application is intended.

(Ex. 3, p. 5.)

In adopting the 1971 version of the MUTCD, the State included in its supplement, with FHWA approval, the distinctive white diamond design, e.g.

, in place of the white circle design, for its state trunkline highway sign. (Ex. 3, p. 104.) The diamond design has been and is currently used to designate the M22 state trunkline highway, as well as other trunkline routes throughout the state.

The 2000 edition of MUTCD included, *inter alia*, the following new Standard prohibiting patent and copyright protection for any sign in the MUTCD:[4]

> **Standard:**
>
> **Traffic control devices shall be defined as all signs, signals, markings, and other devices used to regulate, warn, or guide traffic, placed on, over, or adjacent to a street, highway, pedestrian facility, or bikeway by authority of a public agency having jurisdiction.**
>
> **The Manual on Uniform Traffic Control Devices (MUTCD) is incorporated by reference in 23 Code of Federal Regulations (CFR), Part 655, Subpart F and shall be recognized as the national standard for traffic control devices on all public roads open to public travel in accordance with 23 U.S.C. 109(d) and 402(a). The policies and procedures of the Federal Highway Administration (FHWA) to obtain basic uniformity of traffic control devices shall be as described in 23 CFR 655, Subpart F.**
>
> **Any traffic control device design or application provision contained in this Manual shall be considered to be in the public domain. Traffic control devices contained in this Manual shall not be protected by a patent or copyright, except for the Interstate Shield.**

---

[4] In the MUTCD, the term "Standard" is defined as follows:

> **Standard:**
>
> **When used in this Manual, the text headings shall be defined as follows:**
>
> 1. **Standard –** ***a statement of required, mandatory, or specifically prohibitive practice regarding a traffic control device.*** **All standards are labeled, and the text appears in bold type. The verb shall is typically used. Standards are sometimes modified by Options.**

(Ex. 8, MUTCD, 2003 ed., p. I-1, bold emphasis in original, italics emphasis added.)

(Ex. 15 at I-1.) The language requiring that signs in the MUTCD are in the public domain and not protectable by patent or copyright was included to address frequently asked questions on the matter. 65 Fed. Reg. 78,923, 78,924 (Dec. 18, 2000) (to be codified at 23 C.F.R. pt. 655), attached as Ex. 16.

The 2003 edition of the MUTCD added "trademark" to the protections prohibited to the Standard, as well as other language:

> **Standard:**
>
> **Traffic control devices shall be defined as all signs, signals, markings, and other devices used to regulate, warn, or guide traffic, placed on, over, or adjacent to a street, highway, pedestrian facility, or bikeway by authority of a public agency having jurisdiction.**
>
> **The Manual on Uniform Traffic Control Devices (MUTCD) is incorporated by reference in 23 Code of Federal Regulations (CFR), Part 655, Subpart F and shall be recognized as the national standard for traffic control devices installed on any street, highway, or bicycle trail open to public travel in accordance with 23 U.S.C. 109(d) and 402(a). The policies and procedures of the Federal Highway Administration (FHWA) to obtain basic uniformity of traffic control devices shall be as described in 23 CFR 655, Subpart F.**
>
> **Any traffic control device design or application provision contained in this Manual shall be considered to be in the public domain. Traffic control devices contained in this Manual shall not be protected by a patent, *trademark,* or copyright, except for the Interstate Shield *and any other items owned by the FHWA.***

(Ex. 8, MUTCD, 2003 ed., p. I-1, bold emphasis in original, italics emphasis added.) Although additional language was added to this section in the 2009 edition of the MUTCD, adopted by Michigan in 2011, the Standard language

requiring device designs to be in the public domain and not protectable as trademarks remains unchanged. (Ex. 12; Ex. 13.)

In 2005, while the State could have retained its trademark rights in its distinctive diamond design by leaving it out of the MUTCD, the State adopted the 2003 MUTCD with a supplement substituting the diamond state highway route marker design for the circle design. (Ex. 9; Ex. 10 at p. 18.) The substitution was approved by the FHWA. (Ex. 11.) In doing so, pursuant to federal regulations, the sign was rendered not protectable as a trademark by public or private parties.

3. The FHWA's interpretation of the MUTCD confirms that road signs may not be protected as trademarks by anyone.

The FHWA's interpretation of its regulations is controlling unless "plainly erroneous or inconsistent with the regulation." *Auer v. Robbins*, 519 U.S. 452, 461 (1997); see also *Robertson v. Methow Valley Citizens Council*, 490 U.S. 332, 358-359 (1989). Lest there be any doubt that the FHWA intended to preclude trademark protection by any public or private party for any sign design contained in the MUTCD, its own interpretation of the provision, as explained in a final rule published in the Federal Register on December 1, 2004, thus having the force and effect of law, demonstrates that inclusion of a sign in the MUTCD is tantamount to rendering it not protectable by a trademark by any private or public party. See 69 Fed. Reg. 69,815 (Dec. 1, 2004) (to be codified at 23 C.F.R. pt. 655), attached as Ex. 17. As explained in the Federal Register, the American Pharmacists Association (APhA) suggested that its sign design contemplated by the FHWA for use in the MUTCD should not be used because it was protected by a trademark registered by

the APhA in 1993 and, by incorporating it into the Manual, "the FHWA would require that the symbol be released to the public domain." (*Id.* at 69816, Ex. 17.) Although the APhA was "willing to allow the FHWA to use the symbol, that is different from placing it into the public domain. It is likely the APhA would want to retain its trademark so that the symbol could be used for other purposes . . . such as letterhead, business signs, etc." *Id.* Therefore, the FHWA did not include the sign in the MUTCD.

Here, unlike the APhA, the State included its diamond design for the state trunkline highways in its MUTCD supplement, which was approved by FHWA. In doing so, the sign design is deemed not protectable as a trademark by any individual or entity. While the FHWA could have specified in the MUTCD that the sign is not protectable by the public sector, it did not, and reading such a limitation into the clear and unambiguous language of the Standard would be improper. See *Auer*, 519 U.S. at 461; see also *Christensen v. Harris County*, 529 U.S. 576, 588 (2000). Moreover, any other interpretation would be nonsensical and prejudicial to the State, as allowing others to protect the State's distinctive signs as a trademark after the State voluntarily relinquished such rights by including the sign in the MUTCD so that it is subject to MUTCD Standards, would put the State in the position of defending its right to use its own sign design, having to remove it from the MUTCD altogether because it has trademark protection, or risking the loss of federal funding. Further, if the State's sign is removed from the MUTCD, it would

no longer be subject to MUTCD requirements, and others could make unfettered use of the sign in a manner that jeopardizes traffic safety.

The MUTCD, as confirmed by the FHWA's interpretation, makes clear that the prohibition on trademark protection is not limited in application to only the states adopting it. Indeed, in a Final Rule published in the Federal Register in December 2006, the FHWA clarified that, pursuant to the terms of 23 C.F.R. 655.603, for the purpose of applicability, the MUTCD applies to privately owned property and roads open to public travel, thereby confirming that the MUTCD is not applicable solely to the states. See 71 Fed. Reg. 75,111, 75,115 (December 14, 2006) (to be codified at 23 C.F.R. pt. 655), attached as Ex. 18. Furthermore, in the Final Rule adopted pertaining to the 2009 MUTCD, the FHWA further clarified that only pictographs *embedded* within a traffic control device are not subject to the provision prohibiting trademarks because the pictographs within the signs "are not in themselves considered traffic control devices." See 74 Fed. Reg. 66,730, 66,733 (Dec. 16, 2009) (to be codified at 23 C.F.R. pt. 655), attached as Ex. 19.

In the case of Respondent's M22 sign marks, Respondent has adopted the State route marker as its brand and obtained two trademark registrations on the State's sign, in violation of federal regulations and statutes. Respondent contends that it "*modified the M22 Sign* by rounding the corners of the white diamond located in the middle of the sign and increased thickness of both the 'M' and the '22' located in the white diamond." (Ex. 20, Respondent's Response to Interrogatory Nos. 1 and 2, emphasis added.) To the naked eye, however, Respondent's purported

modifications are imperceptible. The M22 Registration is identical to the State's road sign and the M22 Online Registration differs only because "m22online.com" is below the State's sign in "very tiny" lettering:

[*State Route Sign*] (Ex. 10 at p. 18; Ex. 13 at p. 143.)

[*M22 Registration – No. 3992159*] (Ex. 21.)

[*M22 Online Registration – No. 3348635*] (Ex. 22.)

That Respondent's alleged changes to the State's sign are imperceptible and irrelevant is further evidenced, in part, by the fact that, since Respondent adopted the State's sign as its brand, theft of the State route signs has risen dramatically at the expense of Michigan taxpayers. (Ex. 23, Response to Request to Admit Nos. 4, 11, 12, 15, and 17; Ex. 24, Response to Interrogatory Nos. 1, 2, 4, and 7-9; Ex. 25 MDOT000254.)

The Board can take judicial notice that the mark in the M22 Registration is identical to the State's route marker sign. TBMP § 504.02; § 704.12. Indeed, Respondent conceded this point in response to the Office Action wherein the Trademark Examiner rejected Respondent's application, in part, because "applicant's usage of the mark in a design consisting of a white diamond on a black square with the 'M' in black above the '22' is exactly the way the Michigan Department of Transportation uses the 'M22' in its road signs for this highway." See August 30, 2010 Office Action re: Serial No. 85041051. In its Response,

Respondent did not dispute the Examiner's findings, but rather asserted that the State's sign had acquired distinctiveness associated with Respondent. See February 26, 2011 Response to Office Action re: Serial No. 85041051. Because the entirety of the M22 Registration comprises the State's trunkline highway route marker, said registration must be canceled under the MUTCD Standard precluding trademark protection for traffic control devices, which has the force and effect of law vis-à-vis its incorporation by reference in the applicable federal regulations.

The State's sign design is also used in M22 Online Registration with, according to the Examiner, "the very tiny wording M22online.com at the bottom." See January 26, 2007 Office Action re: Serial No. 79863038; see also Ex. 24, Response to Interrogatory No. 2. For the same reason that the M22 Registration should be canceled, Respondent's M22 Online Registration should also be canceled, or at the very least, the State's sign design should be excluded from the registered mark; otherwise, the registration violates the federal regulation as set forth in the MUTCD Standard prohibiting trademark protection for traffic control devices.

4. The federal regulation as set forth in the MUTCD Standard prohibiting trademark protection for road sign designs precludes protection of the sign under the Lanham Act and common law.

Pursuant to T.M.E.P. 1205.01, "it may be appropriate for the examining attorney to refuse registration pursuant to §§ 1, 2(preamble) and 45 of the Trademark Act, 15 U.S.C. §§ 1051, 1052 and 1127, on ground that the subject matter would not be perceived as a trademark." Respondent's marks, which replicate that State's road sign, should be canceled because the marks cannot be

protected as trademarks under the Lanham Act or common law, pursuant to the MUTCD Standard discussed *supra*. Nor would the State's sign, as copied by Respondent, be perceived as a trademark because it refers to an area in northern Michigan that has for decades been known as the M22 Scenic Heritage Route and as part of the Great Lakes Circle and the Lake Michigan Circle Tour. Thus, Respondent's use of the State's sign was not lawful use in commerce so as to be eligible for protection as a trademark by federal registration.

Under the Lanham Act, 15 U.S.C. 1051, "[t]he *owner* of a *trademark* used in commerce may request registration of its trademark on the principal register . . . ." 15 U.S.C. 1051(a)(1) (emphasis added). Here, Respondent is not the owner of the traffic control device design covered by its registrations. Rather, the State is the owner and has been since the design was created in 1973 and used continuously thereafter. Further, as explained above, because federal regulations mandate that the State's sign design is not protectable as a "trademark," it cannot be a "trademark" so as to qualify for registration by Respondent under 15 U.S.C. 1051(a)(1). As such, Respondent's use of the State's sign design was not lawful use in commerce so as to be eligible for trademark status under the Lanham Act.

For the same reasons, 15 U.S.C. 1052 does not apply to allow Respondent to register the State's trunkline highway route marker design because the Act requires a "trademark" that *may* be registered, to wit: "No *trademark* by which the goods of the applicant may be distinguished from the goods of others shall be refused registration on the principal register." 15 U.S.C. 1052 (emphasis added). Because

the State's route marker design cannot be protected as a trademark through federal registration, it does not meet the definition of a "trademark" under 15 U.S.C. 1127(1), which is defined as "any word, name, symbol, or device, or any combination thereof – . . . which a person has a bona fide intention to use in commerce and applies to register on the principal register . . . ." *Id.*

Clearly, the terms of the MUTCD do not conflict with the Lanham Act or with common law trademark rights, but rather dovetail with the language of the Act. Obviously, the prohibition on trademark protection for any sign in the MUTCD necessarily means that the State's sign cannot fit within the definition of "trademark" under the Lanham Act and, thus, cannot be registered. Consequently, because Respondent did not and cannot satisfy the requirements for trademark registration of the State's route marker design, namely ownership and a mark that qualifies as a "trademark," the registrations should be canceled, or the M22 Registration should be canceled and the M22 Online Registration should be limited solely to "m22online.com" wording.

II. Unless Respondent's registrations are canceled, the State is at risk of having to cease using the diamond design sign it has used for more than four decades, or lose federal funding.

For more than three decades before Respondent was formed, and before its founders began selling t-shirts showing the State's M22 route marker design, the State and others have regularly used, and continue to use, the M22 sign to designate highways and to market northern Michigan as part of the Lake Michigan Circle Tour and Great Lakes Circle Tour and, for well over a decade, as a Michigan

Scenic Heritage Route. (Exs. 26, 27, and 28.) Whether Respondent may have been the first to put the M22 route marker on a t-shirt is irrelevant. It can continue to do so. However, as a matter of law, Respondent cannot protect the State's sign as a trademark.

Ironically, Respondent has used the State's sign design without fear of being sued for trademark infringement *because* the State chose to include its route marker design in the MUTCD. Otherwise, the State could enforce its mark against Respondent, which chose to brand its company around the State's mark that Respondent knew or should have known cannot be protected as a trademark.

If Respondent's registrations are permitted to stand, the State will be at risk of having to remove its diamond design sign from the MUTCD, or of losing federal funding because, as a registered mark, it is no longer compliant with federal regulations. If the sign is no longer in the MUTCD, then it is not subject to the federal regulations required of a trunkline highway built or maintained, at least in part, by federal funds. Consequently, the State would be at risk of losing federal funds for using a sign that is not subject to the federal regulations contained in the MUTCD, or alternatively, the State could be faced with having to adopt and implement a new sign design for the thousands of miles of trunkline state highways throughout Michigan. Of course, any new sign would be subject to the MUTCD, and not protectable by a trademark – unless Respondent or others obtain a federal registration on the sign – at which point, the State will be required to design another new sign, and so on, and so on. Clearly, allowing Respondent to flout

federal regulations and maintain its registrations puts the State in an untenable position.

Notably, cancellation of Respondent's registrations, or limiting the M22 Online Registration to "M22online.com," does not prohibit Respondent from using the State's M22 route marker design, in accordance with applicable laws and regulations, to market its name and its wares. However, Respondent cannot circumvent the federal regulations to protect the State's sign design as its own trademark and to prevent others from using the mark in accordance with all applicable laws and regulations, such as companies located along all of Michigan's state trunkline highways. Yet, that is exactly what Respondent has done – including threatening to sue companies located along M22 in northern Michigan from using the M22 sign design. (Ex. 29.)

There is no question of material fact that the State of Michigan has consistently used its white diamond design on a square black background, with "M" in the top corner and "22" below, as a state trunkline route marker since 1973. Further, there is no material factual dispute that the State included the same sign design in its supplement to the 2003 MUTCD, with FHWA approval, thereby prohibiting trademark protection by states or private parties as a matter of law. Nor is there any factual dispute that Respondent's "usage of the mark in a design consisting of a white diamond on a black square with the 'M' in black above the '22' is exactly the way the Michigan Department of Transportation uses the 'M22' in its road signs for this highway." Respondent conceded as much during examination.

Because, under TMEP 1205.01, the Board must look to controlling statutes and regulations, and those applicable here preclude trademark protection for the State's M-22 route marker design, as approved by FHWA, Respondent's M22 Registration must be cancelled and the M22 Online Registration must be canceled, or limited solely to the "M22online.com" word, with a disclaimer of any trademark rights to the State's route marker sign.

RELIEF REQUESTED

The language of the MUTCD precludes "trademark" status for the State's sign under the Lanham Act. Respondent is prohibited under federal regulations from commandeering trademark rights in the State's state highway route marker included in a FHWA-approved supplement to the MUTCD, which mandates that traffic control devices therein are not protectable as trademarks. Moreover, the FHWA has clarified that the provision applies to all public and private parties. Because the State's sign cannot be protected as a trademark, it cannot be protected under the Lanham Act. Accordingly, the State respectfully requests that this Board grant its Motion for Partial Summary Judgment and cancel the registrations at issue.

Respectfully submitted,

By: /s/Toni L. Harris Date: August 28, 2015

Toni L. Harris, Assistant Attorney General
Transportation Division
Van Wagoner Building
425 W. Ottawa, 4th Floor
Lansing, MI 48913
Tel: 517-373-1470

PROOF OF SERVICE

I, Susan Lubitz, legal secretary to Assistant Attorney General Toni L. Harris, certify that on August 28 2015, I served a true and correct copy of Petitioner's Combined Motion for Partial Summary Judgment and Brief in Support, in electronic format, on Respondent's counsel of record by U.S. mail with first-class postage fully prepaid thereon and causing same to be deposited in the United States mail service.

/s/ Susan Lubitz
Susan Lubitz

Exhibit 1 to MDOT's MSJ

Michigan's Route Markers

From the earliest times of numbered and marked state trunklines in Michigan, the standard state route marker has been the shape of a diamond with a block letter "M" in the upper corner. Early on, the diamond was taller than wide, had the words "STATE TRUNKLINE" across the widest part and the "M" and the route number were of the same size.

These early route markers would either be erected on stand-alone posts or on telephone and electric line poles along the highway. (Utility poles close by the side of the travelled-way were much more common in the first half of the 20th century.) Quite often, the "new" state trunkline marker of the late 1910s and early 1920s was applied directly over or adjacent to the colored bands designating one or more Named Auto Trails. By the 1930s, the diamond had been "squashed" down so that all angles were at 90 degrees.

The ubiquitous Michigan diamond state route marker was reportedly designed by Allan M. Williams (1892 –1979) who joined the Michigan State Highway Department as a project engineer in 1918 and, in conjunction with a $50 million dollar highway bond issue in 1919, he drafted the state's first complete highway map. Since Michigan began designating and signing its state trunkline highways at this time, it is quite possible Mr. Willliams did, indeed, design the original state trunkine route marker. While Williams became engineer-manager of the Ionia County Road Commission in 1919, he also continued in a dual role as project engineer for the state highway department until 1927 and held his position with Ionia County until his retirement in 1957.

In the early 1970s when U.S. federal government mandated updated and standardized traffic signage, the traditional Michigan "cutout" diamond was then incorporated with a square black sign "blank," as it is today. For more than three decades, the Michigan state trunkline marker has remained relatively unchanged.

This page attempts to illustrate the many and varies types of route markers used on Michigan's highways, from Interstate, US and State highways to National Forest routes, Great Lakes Circle Tours, county roads and others. Pick a type of route marker to jump directly to it:

Interstate | US Highway | State | County | Forest | Circle Tour | Heritage (Byway) | Other

Interstate Highway Markers (Mainline Routes)

Original style Interstate route marker adopted in the late 1950s and in use into the 1980s.	Newer-style Interstate route marker omits the state name, allowing for larger and easier-to-read numerals.	Interstate Business Loop route marker, commonly used in Michigan.	Interstate Business Spur route marker is less common due to a smaller number of these routes.

Interstate Highway Markers (3-digit Loop & Spur Routes)

Original style Interstate three-digit route marker adopted in	Newer-style Interstate three-digit route marker omits the		Three-digit Interstate Business Spur route marker is less

the late 1950s and in use into the 1980s.	state name, allowing for larger and easier-to-read numerals.	Three-digit Interstate Business Loop route marker, commonly used in Michigan.	common due to a smaller number of these routes.

US Highway Markers

Original "cutout" style US Highway route marker adopted in 1927 and in use into the late 1940s. Wider three-digit markers did not exist at this point.	In 1948, the US Highway route marker began using the "new" FHWA typeface, but was otherwise unchanged in shape. It remained in use into the 1970s.	Although it seems it may not have been adopted nationally, Michigan did use a wider variant of the 1948 cutout US Highway route marker for three-digit highways into the 1970s as well.	This "Outline Sign" was used in from 1948 into the 1960s for junction, target and overhead route marker assemblies. A wider three-digit marker also existed.
While the US Highway maker was revised in 1961 to include a black "sign blank" background, Michigan continued using the 1948 version until this 1971 modified version was adopted. The state converted to this style still used today.	The modern-day three-digit US Highway route marker, also adopted in 1971 when Michigan converted from using the 1948 version.	The modern-day three-digit US Highway route marker using the narrower "Series C" of the FHWA typeface to accommodate larger numbers.	As Michigan has two US Highways with two "1"s in their designations, many US-131 and US-141 route markers have been posted using the two-digit route shield.

State Highway Markers

These are two representations of early state trunkline route markers from the 1920s, one wrapped around a utility pole (L) and the other an independently-mounted sign (R).	A more standard state highway route marker was settled upon in 1926 concurrent with the adoption of the first U.S. Highway route marker.	When the U.S. Highway route marker was modified to use the "new" FHWA typeface in 1948, the Michigan state trunkline marker followed suit with regard to the numerals. The "block M" remained as it was, however.	Again, when the FHWA updated the U.S. Highway route marker specification in 1971 to use black "sign blanks" as a background, Michigan followed suit to create its current style of route marker.
Another rendition of the present state highway marker, this one showing how three-digit route numbers appear using the "Series C" FHWA typeface.	To date, the only reassurance or other independently-mounted state highway markers in an elongated format appear along M-553 in Marquette Co.	A very unique route, Mackinac Island's M-185 is the only "motorless state highway" and sports unique signage, including distances from the visitor center.	Yet another unique trunkline route, the CAPITOL LOOP in downtown Lansing functions as a loop off I-496, but has its own unique markers.

Intercounty & County Route Markers

The standard Intercounty Highway route marker, although this one is unique in that A-2 is the only 'two-character' route. The marker was created in 1967 by the National Assoc. of Counties as part of their National Uniform County Route Marker Program.	Another IntercountyHighway route marker, this one uses a hyphen between the letter and numbers. There is no concensus between the "with" and "without" hyphen styles and both styles may be seen along the same route.	Some counties in Michigan sign their own county routes, such as Gogebic illustrated above, using the standard National Assoc. of Counties route marker.	Many other counties opt to use an older style of county route marker: a square white (or sometimes green) blank with the county name and route number in the center.

Federal Forest Highway & Forest Road Markers

Federal Forest Highway route markers appear in several of Michigan's national forests. These are high-quality, well-maintained (usually all-weather) highways.	Secondary Forest Road sign, used on roads generally open to automobile travel and closed to ORV use. These roads can range from paved to one-lane gravel.	Low-Standard Forest Road signs are used for roads which may be open to motorized use or may be closed to all but ORV or foot traffic. These range from one-lane gravel to two-track.	The National Forest Scenic Byway sign is used in many places across the U.S., specificially in Michigan on the Black River Harbor Scenic Byway north of Bessemer.

Great Lakes Circle Tour Markers

The Great Lakes Circle Tour sign, used very sparingly in Michigan, although it does appear once in awhile.	The Lake Erie Circle Tour route marker, appearing in only two Michigan counties: Monroe and Wayne.	The Lake Huron Circle Tour route marker as it appears along Lake Huron shoreline routes in both peninsulas.	The Lake Huron Circle Tour Loop route marker is used in the DeTour Village area.
The Lake Michigan Circle Tour route marker is found along many miles of Michigan trunkline.	The Lake Michigan Circle Tour Loop runs along M-109 in Leelanau Co.	The Lake Michigan Harbor Tour is a locally-posted route in the Saugatuck-Douglas area.	The Lake Superior Circle Tour route marker appears often throughout the U.P.
	The Lake Superior Circle Tour Loop marker appears along at least two highways in the U.P.	The Lake Superior Circle Tour Scenic Spur runs via M-77 from Seney to Grand Marais.	

Heritage Route (Michigan's Byways) Markers

Historic Heritage Route marker.	Recreational Heritage Route marker.	Scenic Heritage Route marker.	

Other Route Markers

The Blue Star Highway route marker is used along a portion of the former route of US-31 in Van Buren Co.	The Oceana Circle Tour route marker appears along a locally-designated route in Muskegon and Oceana Cos.	The Polar Equator Trail route marker can be found in Antrim, Otsego, Montmorency and Alpena Cos.	The Red Arrow Highway route marker is used along the former route of US-12 in Van Buren and Berrien Cos.
The Shoreline Trail route marker appears on a locally-designated route in Muskegon Co running along the Lake Michigan shoreline.	In 2004, US-23 from Standish to Mackinaw City was designated as the Sunrise Side Scenic Highway and these route markers are posted along the route.	This "US-41 Scenic Route" marker was used from the late-1960s until 1999 along US-41 in northern Keweenaw Co.	

Acknowledgements:

Nearly every route marker image above was created by Christopher J. Bessert and, therefore, all original graphics are copyrighted ©2008-2013 Christopher J. Bessert, All Rights Reserved. Please do **not** reproduce or otherwise use them without permission. Any commercial use is **strictly** prohibited. While certain components of these markers are not "copyrightable," **these** graphics **are** copyrighted. If you'd like to use one of them, please ask first!

However, some acknowledgements and credit are necessary.

- Many thanks to Michael Adams and his "Roadgeek" typeface series used to create many of these rotue markers.
- Additional thanks to Bruce S Cridlebaugh and his "USHighwaysOldStyle" typeface used for the 'original style' US and State route markers.
- Richard C. Moeur's "Sign Manual" website provided a few of the graphic bases used in creating these markers.
- Many thanks to Barry Camp for his assistance with the Capitol Loop marker.
- James Lin's "Highway Route Markers" website provided much inspiration.
- The "Sunrise Side Coastal Highway" image is courtesy Michigan's Sunrise Side, Inc.
- The two earliest state trunkline markers ("M-2" and "M-11") were reproducted from a Rand McNally & Co. "Junior Auto Trails Map of Michigan," 1926.

Additional Information:

For more information on Michigan's state trunkline (and other) route markers, visit the following off-site sources:

- **Roadpix - Michigan's Changing Route Marker Styles** - a page at Barry Camp's website which captures examples of route marker experimenting by MDOT in mid-Michigan.
- **Highway Route Markers** by James Lin, features highway markers from the US, Canada, Asia, Australia, Europe and Mexico.
- **Road Signs of Michigan** by Mark O'Neil. Also includes route markers and traffic signal photos from across the US.
- **Michigan's Route Markers: The Clearview Future?** - See what Michigan's route markers might look like if MDOT switches from using the FHWA typeface to the new Clearview typeface now being used on freeway guide signs.
- NEW! **Allan M. Williams, 1892–1979** - an obituary posted on the Ionia County Road Commission website regarding the man who likely designed the Michigan state trunkline route marker in c.1918–1919.

- NEW! **Allan M. Williams (1892-1979)** - a short article from the Michigan Transportation Hall of Honor on the MDOT website.

Copyright © 1997-2015 Christopher J. Bessert. All Rights Reserved. | chris.bessert@gmail.com | Last updated Monday, July 20, 2015.

Exhibit 2 to MDOT's MSJ

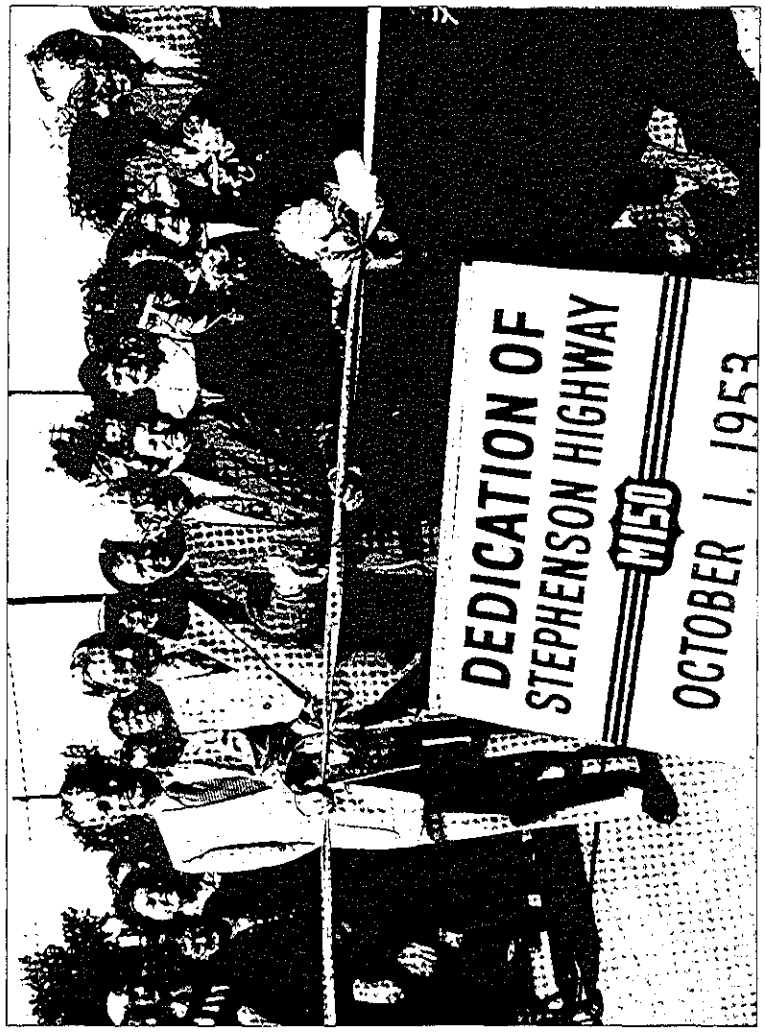

State Highway Commissioner Charles M. Ziegler does the ribbon-cutting honors at the Stephenson Highway in Oakland County. See related text on page 204.

A DRIVE DOWN MEMORY LANE: The Named State and Federal Highways of Michigan

By LeRoy Barnett, PhD

The Priscilla Press
Allegan Forest, Michigan
2004

MDOT000157

cally superior Iroquois attacked the Ottawa nation and drove the people from their homelands west to the Straits of Mackinaw district. After living in that area for some years, most of the remaining tribe members relocated in 1742 to the Cross Village region, making contemporary Emmet County "the Ottawa capital of the Midwest."

As residents of the northwestern Lower Peninsula, the Ottawa made important contributions to the culture and economy of the territory. With one of the largest Indian populations in the state, the tribe's women produced substantial quantities of high-quality arts and handicrafts like woven baskets, quillwork, pottery, jewelry, beaded items, paintings, sculptures, carvings, and buckskin clothing. They were also responsible for harvesting surprising amounts of berries and maple sugar for sale in local markets.

The men also contributed their share. At various times in the evolving whiteman's world the Ottawa males served as trappers, hunters, guides, packers, boatmen, fishermen, lumbermen, farm workers, and winter mail carriers (when it was necessary to deliver the mail using snowshoes since there were no open roads and ice had temporarily ended navigation). The Ottawa "braves" also catered to Michigan's tourist trade by performing for the benefit of visitors in various plays and pageants, conducting periodic public pow wows, and reenacting popular tribal rituals.

The Ottawa men were also warriors. Not only were they formidable adversaries in olden days, they also proved their mettle in the more modern era. During World War I, for example, 1,029 men from Emmet County answered the call of their country and served in uniform. Of this number, 49 (4%) were Ottawa Indians fighting for a nation that had treated them at times in less than honorable ways. As an expression of appreciation for this act of sacrifice and forgiveness, the Emmet County Board of Supervisors on 15 October 1920 named the Harbor Springs to Cross Village shoreline drive the "Chippewa Memorial Pike."

When the earliest government surveyors came to Michigan they found an Indian trail already existing between present-day Cross Village and Harbor Springs. The first atlas of our state shows that by 1873 this path had become a road, although by contemporary standards it would not be so generously characterized. Wishing to upgrade this picturesque route, on 25 June 1919 the Emmet County Road Commission announced it would rebuild the road so it could accommodate motorists.

The task of making the Chippewa Memorial Pike suitable for automobiles was roughly finished in 1921 and upgraded to the highest standards in 1923. Because of the beautiful vistas along this winding stretch of road, in 1927 Michigan's Highway Department said it would take over the route if a right-of-way 300 feet wide could be acquired along the wooded sections of its course to preserve the natural scenic qualities. By 1933 it had become clear that it would never be possible to obtain property rights to a swath that wide, so the state accepted the road as it existed and on 1 January 1934 declared the shoreline avenue through the "tunnel of trees" to be trunk line M-119.

And so it is by a three-digit number and not a name that the famous high-bluff road along Lake Michigan's western coast is known today. The memorial name of appreciation bestowed years ago by the Emmet County supervisors has long since been forgotten, as it never seemed to catch on with the white community. The resident Indians never cared much for it either, for the well-intentioned county fathers mistakenly named a tribute to the Ottawas after their Chippewa brethren.

Seventy years after the picturesque coast-hugging road was turned over to the state by Emmet county, local citizens there succeeded in getting the spectacular stretch of pavement declared a Michigan Scenic Heritage Route. This special designation was celebrated at a ceremony in the Indian settlement of Cross Village on 28 June 2003, a date that more or less represents the dedication of an alluring highway honoring one of our most famous groups of Native Americans.

Coordinates: E/10

CHIPPEWA TRAIL

In former times the Chippewa (or Ojibwa) Indians were the most populous tribe in the land that became Michigan, and they remain so today. In the Upper Peninsula they occupy reservations at Bay Mills, Keweenaw Bay, L'Anse, and Lac Vieux Desert, with large numbers also living on Sugar Island. South of the Straits the Chippewa have reservations at Mount Pleasant and Sutton's Bay.

The Chippewa were the first natives seen by Europeans when the white man came to this area in 1622. Our woodland Indians got along well with these newcomers and helped them establish control over the western Great Lakes region by serving as hunters, trappers, guides and warriors. As allies of the French and then the British, the Chippewa became one of the largest tribal groups in North America with a territory covering 1,000 miles from east to west, extending from Lake Huron to North Dakota.

The word "Chippewa" means puckered up from roasting, a term derived from the peculiar seam the tribe members sewed on their moccasins. In addition to their noted skills in working with animal skin and needle, these people were also expert with the canoe, as fishermen, and in the use of birch bark to make things like boxes, baskets, and covers for wigwams. The Chippewa were also preeminent as gatherers of wild rice, and even now they harvest much of the wild rice that is eaten in this country.

As the dominant group of native Americans in our region, it is not surprising to find their tribal name well represented on the landscape. In Michigan the word "Chippewa" has been given to one county, three townships, one hill, one waterfall, a harbor, one lake, a river, two creeks, three communities, a state forest, and two points along the Great Lakes shoreline. "Ojibwa," the alternative name for the tribe, appears on one lake, a mountain, and an island.

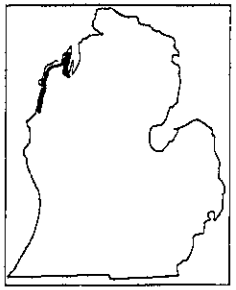

Though not well known, "Chippewa" also appeared on the Michigan landscape as a named highway. This event occurred on 25 February 1930, when the M-22 Association bestowed this title upon the scenic route that runs from Manistee to the tip of Leelanau County and back south to Traverse City.

For months the M-22 Association had sought a name that would appropriately describe its highway and lure tourists to drive the road. While the group was meeting at the Chippewa Hotel in Manistee, the magic term just suddenly came to mind.

The image of an Indian head was chosen as a symbol for the route, and plans were made to print 25,000 copies of a promotional brochure for distribution to tourists. But economic realities interfered with the sponsor's dreams, and a deepening national recession curtailed efforts to publicize the highway. Today, M-22 still remains one of the most popular scenic routes in Michigan, but the name "Chippewa Trail" exists only in history.

Coordinates: G-H/8-9

MDOT000158

The ensuing improvements made these two routes some of the most popular avenues to the Straits, which is why no one any longer remembers the Mackinaw Scenic Shortway Route.

Coordinates: J-N/11-12

MACKINAW TRAIL

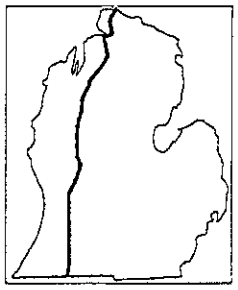

Mackinaw, or Mackinac, is one of the most famous terms in Michigan. The Indian word for "turtle," this name has been given to a village, city, township, county, straits, island, fort, bridge, lake, state forest, and state park plus a specific type of coat, boat, and blanket.

With such widespread use of the word, it is not surprising that it has also been applied to a road. But since two routes can lay claim to this honor, some explanation is in order for the benefit of readers.

The original Mackinaw Trail was an Indian path that ran from Saginaw north through the interior to present-day Mackinaw City, then across the Straits and on to Sault Ste. Marie. Most of this distance was surveyed for a road in 1835, but it was not until decades later that it was actually made passable for vehicular travel.

Though generally not known as the Mackinaw Trail today, evidence of this route's previous name can still be found on road signs in parts of Saginaw, Bay, Cheboygan, and Mackinac counties.

The contemporary Mackinaw Trail scarcely comes near the old track. For while the former course connected Saginaw Bay with the Soo, the present route runs from around Niles north to the Straits.

This transfer of a name from the eastern to the western part of the state all began at Cadillac in October of 1915. It was then and there that the Mackinaw Trail Association was formed for the purpose of developing a modern highway from Grand Rapids to Mackinaw City.

The concept for this road stemmed in part from traffic congestion along what is today highway US-31. With so many people driving that trunkline for tourist and sightseeing purposes, an alternate interior route for higher-speed travel was seen as necessary.

To encourage use of what is today US-131, the Association dubbed this diversionary course the Mackinaw Trail. In devising a symbol for the route that motorists could follow on sign boards, the group adopted the Mackinaw Trout, the same logo used by the Grand Rapids & Indiana, the railroad that paralleled the highway.

As the number of cars traveling US-131 grew, the Association sought the government's blessing for its cause. In 1929 it convinced members of the Michigan House of Representatives to officially designate it the Mackinaw Trail, but the measure ultimately died in the Senate.

With the opening of the Mackinaw Bridge in 1957, state interest was focused on the old Indian word. Attempting to capitalize upon this situation, the legislature was once again asked by promoters to bless their naming of the road. The result was Public Act 170 of 1959, a statute declaring US-131 from Indiana to Petoskey, and US-31 from Petoskey to the Straits, the Mackinaw Trail.

Some alterations to this status occurred in 2001 when the Legislature passed Public Act 142. This piece of lawmaking essentially left the course of the Trail intact but it officially modified the name of the road from "Mackinaw" to "Mackinac." While the slight change in spelling may have affected how some travelers pronounced the word, it certainly did not detract in any way from the pleasure they experienced from the drive.

The latest chapter in this route's saga occurred in 2004 under color of Public Act 138. This statute declared that the portion of trunk line US-131 from Kalkaska to Petoskey, and the segment of US-31 from Petoskey north to the Straits, would henceforth be known as the "Green Arrow Route-Mackinac Trail." Some people subsequently questioned the wisdom of having a compound road name whose signboards will be nearly as long as the highway itself.

Coordinates: F-N/9-10

MANITOU TRAIL

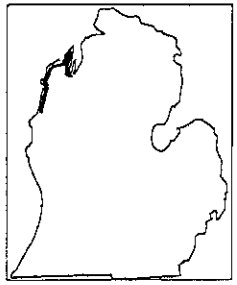

The Algonquin Indians of the Great Lakes region worshipped or venerated forces with supernatural powers. These gods or spirits were called Manitous, and as such they were objects of religious awe and reverence. These masters of life--if appealed to or appeased--could make the hunt successful, the warrior strong in battle, and the perilous journey safe.

Since such deities played a major role in ancient Indian culture, it is not surprising that references to them would appear in the territories once inhabited by indigenous peoples. Here in Michigan, for example, there is Manitou Island off Keweenaw Point, Lake Manitou (Leelanau, Oakland and Shiawassee counties), Manitou Passage (in eastern Lake Michigan), Manitou Payment Point (Mackinac County), the village of Manitou Beach (Lenawee County), plus a township and a former county (1855-1895).

By far the most famous landforms carrying the Manitou name are the North and South Manitou Islands just west of Leland. According to Indian lore, these large glacial remnants in Lake Michigan represent two drowned cubs who tried to follow their mother (Sleeping Bear) on a swim from the Wisconsin shore east to the Empire Dunes complex. As an aside, it is also worth noting here Manitoulin Island in northern Lake Huron. Though not within Michigan's borders, this largest freshwater island in the world is just on our doorstep.

In addition to all of these physical and cultural features named Manitou, there was also a long stretch of pavement possessing this title. The story of this christening goes back to 1913, when trunk line M-22 became the first state highway established in Benzie, Leelanau and Manistee counties. Despite its early presence on the transportation scene, route M-22 was not heavily used because most drivers seemed to prefer riding on the nearby alternative US-31.

In an effort to attract more vehicles to the Lake Michigan shoreline drive, the M-22 Association was founded in February of 1953. The purpose of this organization was to increase traffic along the coastal road by publicizing its virtues through advertising and other promotional activities.

Before touting the benefits of a spin in the family car along M-22, the route's backers figured they first needed a "catchy" name for the highway. The Association ran a contest to find the best title for the road, and on 15 April 1953 its board of directors chose "Manitou Trail" out of more than 500 entries.

Almost immediately special brochures were printed up and placemats produced boosting travel on scenic M-22. And for a number of years thereafter advertisements could also be seen in various venues in favor of the winding vehicular path along the northwestern Lower Peninsula shore. But before the old Indian name could become popular with the motoring public, the assets of the Association became unequal to the task of championing a road off the beaten path. The sponsoring group eventually dissolved due to funding problems and the Manitou Trail found itself beyond the help of even the great spirit gods of the Native Americans.

Coordinates: F-H/8-9

MDOT000159

Exhibit 3 to MDOT's MSJ

MICHIGAN

manual of uniform traffic control devices

MICHIGAN DEPARTMENT OF STATE HIGHWAYS ● MICHIGAN DEPARTMENT OF STATE POLICE

ERRATA

MICHIGAN MANUAL OF UNIFORM TRAFFIC CONTROL DEVICES

3RD REVISION

Publication of the 3rd Revision to the Michigan Manual of Uniform Traffic Control Devices has the following errors which require correction:

1. The BUS STOP symbol sign, page 58a, should have a black transit logo if a logo is utilized.

2. The supplemental NO PARKING educational plaque, page 62, shall have red legend and border on white background rather than black legend and border as shown.

3. Figure 3–10c, page 231, the identification of the LANE ENDS MERGE RIGHT sign and the Pavement Width Transition symbol sign should be transposed.

4. The General Information Signs (I Series), pages 139 through 141c, shall have white legend on green background; except State Police/Sheriff Dept. Signs, 17–1 and 17–2, shall have white legend on blue background. The 17–3, 17–4 signs shall remain as shown.

E. V. ERICKSON
CHAIRMAN
CHARLES H. HEWITT
VICE CHAIRMAN
PETER B. FLETCHER
CARL V. PELLONPAA

WILLIAM G. MILLIKEN, GOVERNOR

DEPARTMENT OF STATE HIGHWAYS

STATE HIGHWAYS BUILDING – POST OFFICE DRAWER K – LANSING, MICHIGAN 48904

JOHN P. WOODFORD, STATE HIGHWAY DIRECTOR

October 1, 1973

To: Manual Recipient

From: John P. Woodford, Director
Michigan Department of
State Highways

John R. Plants, Director
Michigan Department of State Police

Subject: 1973 Edition of the Michigan Manual of Uniform Traffic Control Devices

The 1973 edition of the Michigan Manual of Uniform Traffic Control Devices includes recent changes in national standards relating to traffic control device design, construction, and application on all public highways and streets throughout the State of Michigan. In accordance with Section 608, Act 300, P.A. 1949 as amended, the provisions included in this Manual are the standards to be adopted by the State, counties, townships and municipalities.

If you are an official of a municipality or other governmental agency, and you do not personally have a direct need to retain your copy of this publication, we suggest that you make it available to that person in your organization most concerned with highway traffic operations. We would appreciate being advised if you transfer your copy of the Manual to another individual or if you change your address so that distribution records can be kept current. Future revisions can then be appropriately directed.

If additional copies of the Manual are desired, they can be obtained for the production cost of $9.00 each. Checks should be made payable to the State of Michigan. Notification of address change or Manual transfer, as well as request for additional copies, should be directed to the Contracts Section, Publications Unit, Michigan Department of State Highways, Drawer K, Lansing, Michigan, 48904.

During the next few months, the Michigan Department of State Highways will be conducting workshops at various locations throughout the State for the benefit of selected local authorities who have responsibilities for certain phases of traffic operations on public highways and streets. If you have such responsibilities, we urge you to become familiar with provisions included in the Michigan Manual and plan to attend a workshop when it is held in your area.

We believe this Manual offers the best means of attaining traffic control device uniformity on all roads and streets, thereby increasing the comfort and safety of all highway users.

John P. Woodford Director
Michigan Department of State
Highways

John R. Plants Director
Michigan Department of State
Police

MICHIGAN
THE
GREAT
LAKE
STATE

1973 EDITION

MICHIGAN MANUAL OF UNIFORM TRAFFIC CONTROL DEVICES

ADDENDUM

In section 2B-35, a sign with the legend RIGHT TURN ON RED AFTER STOP (R10-9) is included. According to section 612 (d) (2), Act 300, P.A. 1949, as amended, a red flashing arrow is the only traffic control device which will permit a driver to make a right turn when facing a steady red signal indication.

At the present time, legislation is being considered that would provide for permitting the R10-9 sign as well as the red flashing arrow to be used to designate locations where a right turn may be permitted with a steady red signal indication displayed. However, until such legislation has been approved, the red flashing arrow is the only device available to permit right turns in the face of a steady red indication. The R10-9 sign is not to be used as outlined in section 2B-35 and other sections of the 1973 edition of the Michigan Manual of Uniform Traffic Control Devices until legislation permitting the sign has been enacted.

John Woodford Director
Michigan Department of State Highways

John R. Plants Director
Michigan Department of State Police

October 1, 1973

MICHIGAN MANUAL OF
UNIFORM TRAFFIC CONTROL DEVICES
1973 EDITION

Prepared By:

MICHIGAN DEPARTMENT OF STATE HIGHWAYS

JOHN P. WOODFORD, Director

In Conjunction With

MICHIGAN DEPARTMENT OF STATE POLICE

JOHN R. PLANTS, Director

CERTIFICATION

In accordance with Section 608, Act 300, P.A. 1949 as amended, we hereby certify that the provisions of this Manual constitute the prescribed standards of design, construction and application of traffic control devices for use upon highways within this State and declare these to be the standards to be adopted by the State, counties, townships, and municipalities.

Director
Michigan Department of State Highways

Director
Michigan Department of State Police

October 1, 1973

CONTENTS

			Page
Introduction			1

Part I — GENERAL PROVISIONS

Section	1A— 1.	Requirements of Traffic Control Devices	3
	1A— 2.	Responsibility for Traffic Control Devices	4
	1A— 3.	Engineering Study Required	5
	1A— 4.	Meanings of "Shall," "Should," and "May"	5
	1A— 5.	Procedures for Developing New Standards and for Interpretation and Revision of Existing Standards	5
	1A— 6.	Relation to Other Documents	7
	1A— 7.	Color Code	8

Part II — SIGNS

A. Introduction and General Specifications

Section	2A— 1.	Function of Signs	9
	2A— 2.	Scope of Sign Standards	9
	2A— 3.	Legal Authority	10
	2A— 4.	Standardization of Application	10
	2A— 5.	Variable Message Signs	11
	2A— 6.	Excessive Use of Signs	11
	2A— 7.	Classification of Signs	11
	2A— 8.	Standardization of Signs	12
	2A— 9.	Design	12
	2A—10.	Shapes	13
	2A—11.	Sign Colors	13
	2A—12.	Dimensions	14
	2A—13.	Symbols	15
	2A—14.	Word Messages	16
	2A—15.	Lettering	16
	2A—16.	Illumination and Reflectorization	16
	2A—17.	Means of Illumination	16
	2A—18.	Means of Reflectorization	17
	2A—19.	Sign Borders	17
	2A—20.	Supplemental Beacons	17
	2A—21.	Standardization of Location	17
	2A—22.	Overhead Sign Installations	18
	2A—23.	Height	18
	2A—24.	Lateral Clearance	22
	2A—25.	Position of Signs	26
	2A—26.	Erection	26
	2A—27.	Posts and Mountings	27
	2A—28.	Bridges for Sign Supports	27
	2A—29.	Sign Materials	27
	2A—30.	Maintenance	27

B. Regulatory Signs

Section	2B— 1.	Application of Regulatory Signs	33
	2B— 2.	Classification of Regulatory Signs	33
	2B— 3.	Design of Regulatory Signs	33
	2B— 4.	Stop Sign (R1-1)	33
	2B— 5.	Warrants for Stop Signs	34
	2B— 6.	Multiway Stop Sign	35
	2B— 7.	Yield Sign (R1-2)	36
	2B— 8.	Warrants for Yield Sign	36
	2B— 9.	Location of Stop Sign and Yield Sign	37
	2B—10.	Speed Limit Signs (R2-1, R2-2)	38
	2B—11.	Night Speed Sign (R2-3)	39
	2B—12.	Minimum Speed Sign (R2-4)	39
	2B—13.	Location of Speed Limit Sign	40
	2B—14.	Sign for Reduced Speed Ahead (R2-5)	41
	2B—15.	Turn Prohibition Signs (R3-1 to R3-3)	41
	2B—16.	U-Turn Prohibition Sign (R3-4)	43
	2B—17.	Lane-Use Control Signs (R3-5 to R3-9b)	43
	2B—18.	Left Turn Lane Sign (R3-10)	46
	2B—19.	Signal Movement Identification Signs (R3-11)	46
	2B—19A.	Complete Left Turn When Traffic Clears Sign (R3-12)	46
	2B—19B.	Turn Right (Left) Only Signs (R3-13)	47
	2B—19C.	Lane-Use Control Signs for Preferential Lanes	48
	2B—20.	Do Not Pass Sign (4-1)	48b
	2B—21.	Pass With Care Sign (R4-2)	48b
	2B—22.	Slower Traffic Keep Right Sign (R4-3)	48b
	2B—23.	Signs for Uphill Traffic Lanes (R4-5, R4-6)	49
	2B—24.	Keep Right Signs (R4-7 to R4-9)	50
	2B—25.	Do Not Enter Sign (R5-1)	51
	2B—26.	Wrong Way Sign (R5-9)	52
	2B—27.	Selective Exclusion Signs	53
	2B—28.	One Way Signs (R6-1, R6-2)	55
	2B—28A.	One Way Transition Signs (R6-3, R6-3a)	56a
	2B—29.	Urban Parking and Stopping Signs (R7 series)	57
	2B—30.	Placement of Urban Parking Signs	61
	2B—31.	Parking Prohibition Signs in Rural Districts (R8-1, R8-2, R8-3, R8-3a, R8-5, R8-6, R8-10)	61
	2B—32.	Emergency Parking Signs (R8-4, R8-7)	62
	2B—33.	Walk on Left and No Hitchhiking Signs (R9-1, R9-4)	63
	2B—34.	Pedestrian Crossing Signs (R9-2, R9-3, R9-3a)	64
	2B—35.	Traffic Signal Signs (R10-1, R10-2, R10-3, R10-4, R10-6, R10-7, R10-9, R10-11, R10-12)	64
	2B—36.	Keep Off Median Sign (R11-1)	67
	2B—37.	Road Closed Sign (R11-2)	67
	2B—38.	Local Traffic Only Sign (R11-3, R11-4)	68
	2B—39.	Weight Limit Signs (R12-1 to R12-7)	68
	2B—40.	Weigh Station Signs	70
	2B—41.	Truck Route Sign (R14-1)	70
	2B—42.	Railroad Crossbuck Sign (R15-1, R15-2)	71
	2B—43.	Other Regulatory Signs	72

(Rev. 1)
(Rev. 2)
(Rev. 3)

C. Warning Signs

Section 2C– 1. Application of Warning Signs 73
2C– 2. Design of Warning Signs 74
2C– 3. Placement of Warning Signs 75
2C– 4. Turn Sign (W1-1) 75
2C– 5. Curve Sign (W1-2) 76
2C– 6. Reverse Turn Sign (W1-2) 76
2C– 7. Reverse Curve Sign (W1-4) 76
2C– 8. Winding Road Sign (W1-5) 77
2C– 9. Target Arrow Sign (W1-6, W1-7) 77
2C–10. Cross Road Sign (W2-1) 78
2C–11. Side Road Sign (W2-2, W2-3) 79
2C–12. T Symbol Sign (W2-4) 79
2C–13. Y Symbol Sign (W2-5) 79
2C–14. Stop Ahead Sign (W3-1, W3-1a) 80
2C–15. Yield Ahead Sign (W3-2, W3-2a) 80
2C–16. Signal Ahead Sign (W3-3) 81
2C–17. Merge Sign (W4-1) 81
2C–18. Pavement Width Transition Signs (W4-2, W9-1, W9-2) 82
2C–19. Road Narrows Sign (W4-1) 83
2C–20. Narrow Bridge Sign (W5-2) 83
2C–21. One Lane Bridge Sign (W5-3) 83
2C–22. Divided Highway (Road) Sign (W6-1) 83
2C–23. Divided Highway (Road) Ends Sign (W6-2) 84
2C–24. Two-Way Traffic Sign (W6-3) 85
2C–24A. Freeway Ends Sign (W6-4) 85
2C–25. Hill Sign (W7-1, W7-2) 86
2C–26. Bump Sign (W8-1) 87
2C–27. Dip Sign (W8-2) 87
2C–28. Pavement Ends Sign (W8-3) 87
2C–29. Soft Shoulder Sign (W8-4) 88
2C–30. Slippery When Wet Sign (W8-5) 88
2C–30A. Watch for Ice on Bridge Sign (W8-6) 88
2C–31. Railroad Advance Warning Sign (W10-1) 89
2C–32. Advance Crossing Signs (W11 series) 89
2C–33. Crossing Signs (W11A series) 92
2C–34. Double Arrow Sign (W12-1) 93
2C–35. Clearance Signs (W12-2, W12-3) 94
2C–36. Advisory Speed Plate (W13-1) 95
2C–37. Advisory Exit Speed Signs (W13-2, W13-3) 96
2C–38. Dead End Signs (W14-1, W14-2) 97
2C–39. No Passing Zone Sign (W14-3) 97
2C–40. Other Warning Signs 98

D. Guide Signs – Conventional Roads

Section 2D– 1. Scope of Conventional Road Guide Sign Standards 99
2D– 2. Application 99
2D– 3. Color, Reflectorization and Illumination 99
2D– 4. Size of Signs 99
2D– 5. Lettering Style 99
2D– 6. Size of Lettering 100
2D– 7. Amount of Legend 101

2D— 8. Arrows and Symbols 101
2D— 9. Numbered Highway Systems 102
2D—10. Route Markers and Auxiliary Markers 103
2D—11. Design of Route Markers (M1-1 to M1-7) 103
2D—12. Design of Route Marker Auxiliaries 110
2D—13. Junction Marker (M2-1) 110
2D—14. Combination Junction Sign (M2-2) 111
2D—15. Cardinal Direction Marker (M3-1 to M3-4) 111
2D—16. Markers for Alternative Routes 112
2D—17. Alternate Marker (M4-1, M4-1a) 112
2D—18. By-pass Marker (M4-2) 113
2D—19. Business Route Marker (M4-3) 113
2D—20. Truck Route Marker (M4-4) 113
2D—21. To Marker (M4-5) 114
2D—22. Ends Marker (M6-8) 114
2D—23. Temporary Marker (M4-7) 114
2D—24. Detour Marker (M4-8) 115
2D—25. Detour Sign (M4-9) 115
2D—26. Advance Turn Arrows (M5-1, M5-2) 116
2D—27. Directional Arrows (M6-1 to M6-7) 117
2D—28. Route-Directional Assemblies 119
2D—29. Junction Assembly 119
2D—30. Advance Route-Directional Assembly 120
2D—31. Target Route-Directional Assembly 121
2D—32. Confirmatory Route Marker Assembly 121
2D—33. Confirmatory Route Marker Assembly Used as a Reassurance Marker 122
2D—34. Trailblazers 122
2D—35. Destination and Mileage Signs 123
2D—36. Destination Signs (D1-1 to D1-3) 123
2D—37. Location of Destination Signs 125
2D—38. Mileage Signs (D2-1 to D2-3) 125
2D—39. Location of Mileage Signs 125
2D—40. Street and Advance Road (Street) Name Signs (D3-1, D3-2, D3-2a) 126
2D—41. Parking Area Sign (D4-1) 128
2D—42. Rest Area Signs (D5-1 to D5-5b) 128
2D—43. Scenic Area Signs (D6-1 to D6-3) 130
2D—44. Recreation Area Signs (D7-1, D7-2) 130
2D—45. Weigh Station Signs (D8-1 to D8-3) 131
2D—46. Service Signs (D9-1 to D9-9) 133
2D—47. Mileposts (D10-1 to D10-3) 135
2D—48. Bicycle Route (11-1) 136
2D—48A. Snowmobile Route (D11-2) 136
2D—49. Traffic Signal Speed Sign (11-1) 138
2D—50. General Information Signs (I Series) 138
2D—51. Signing of Named Highways 141d
2D—52. Trailmarkers 141d

E. Guide Signs — Expressway

Section 2E— 1. Scope of Expressway Guide Sign Standards 143
2E— 2. Application 143

(Rev. 1)
(Rev. 2)
(Rev. 3)

2E– 3. General Standards 143
2E– 4. Functions of Expressway Guide Signs 144
2E– 5. Color of Expressway Guide Signs 144
2E– 6. Reflectorization or Illumination 144
2E– 7. Size of Expressway Guide Signs 144
2E– 8. Amount of Legend on Expressway Guide Signs 145
2E– 9. Style of Lettering 145
2E–10. Size of Lettering 145
2E–11. Interline and Edge Spacing 149
2E–12. Abbreviations 149
2E–13. Symbols 149
2E–14. Arrows 149
2E–15. Viewing Factors 149
2E–16. Overhead Sign Installations 150
2E–17. Urban Expressways 150
2E–18. Expressway Guide Sign Classification 151
2E–19. Route Markers and Trailblazers 151
2E–20. Signs for Intersections at Grade 151
2E–21. Expressway Interchange Classification 151
2E–22. Interchange and Exit Numbering 152
2E–23. Interchange Guide Signs 152
2E–24. Advance Guide Signs 152
2E–25. Next Exit Supplemental Sign 154
2E–26. Other Supplemental Signs 154
2E–27. Exit Direction Signs 155
2E–28. Gore Signs 157
2E–29. Post-Interchange Signs 159
2E–30. Mileage Signs 159
2E–31. Interchange Sequence Signs 160
2E–32. Next-Exits Area Signs 161
2E–33. Signing for Services 161
2E–34. Uniform Signing by Type of Interchange 162
2E–35. Rest and Scenic Areas 162
2E–36. Recreation Area Signs 162
2E–37. Milepost Markers 162
2E–38. Miscellaneous Guide Signs 162
2E–39. Special Signing on Expressway Approaches and Connecting Roadways 165

F. Guide Signs – Freeways

Section 2F– 1. Scope of Freeway Sign Standards 167
2F– 2. Freeway Signing Principles 167
2F– 3. General Characteristics of Freeway Signing 168
2F– 4. Characteristics of Urban Freeway Signing 168
2F– 5. Characteristics of Rural Freeway Signing 169
2F– 6. Sign Layouts 169
2F– 7. Diagrammatic Signs 169
2F– 8. Designation of Destinations 170
2F– 9. Limit on Destination Legends 171
2F–10. Routing to a Given Destination 171
2F–11. Overhead Sign Installations 171
2F–12. Style of Lettering and Legend Spacing 172

2F–13. Sign Borders 176
2F–14. Color, Reflectorization and Illumination 176
2F–15. Sign Arrows 176
2F–16. Viewing Factors 176
2F–17. Vertical Clearance 176
2F–18. Horizontal Clearance 177
2F–19. Interchange Classification 177
2F–20. Interchange Exit Numbering 177
2F–21. Interchange Guide Signs 182
2F–22. Post Interchange Signs 182
2F–23. Signing by Class of Interchange 182
2F–24. Interchanges Between Freeways 182
2F–25. Cloverleaf 184
2F–26. Cloverleaf with Collector-Distributor Roadways 184
2F–27. Partial Cloverleaf 184
2F–28. Diamond 188
2F–29. Urban Diamond 188
2F–30. Closely Spaced Interchanges 191
2F–31. Minor Interchange 192
2F–32. Signing for Services 193
2F–33. Specific Services Information 196
2F–34. Rest and Scenic Area Signs 196
2F–35. Weigh Station Signing 196
2F–36. Milepost Markers 198
2F–37. Route Markers and Trailblazers 198
2F–38. Miscellaneous Freeway Guide Signs 198
2F–39. Signing on Freeway Approaches 199

G. Signing for Civil Defense

Section 2G– 1. Civil Defense Emergencies 201
2G– 2. Design of Civil Defense Signs 201
2G– 3. Evacuation Route Marker (CD-1) 202
2G– 4. Area Closed Sign (CD-2) 203
2G– 5. Traffic Regulation Post Sign (CD-3) 203
2G– 6. Emergency Speed Sign (CD-4) 203
2G– 7. Road Use Permit Sign (CD-5) 204
2G– 8. Emergency Aid Centers Sign (CD-6) 204
2G– 9. Fallout Shelter Direction Sign (CD-7) 205

PART III–MARKINGS

A. General Principles

Section 3A– 1. Functions and Limitations 207
3A– 2. Standardization of Application 207
3A– 3. Materials 208
3A– 4. Colors 208
3A– 5. General Principles–Longitudinal and Pavement Markings 209
3A– 6. Widths and Patterns of Longitudinal Lines 209
3A– 7. Types of Longitudinal Lines 209
3A– 8. Transverse Markings 211
3A– 9. Curb Markings 211

B. Application of Pavement and Curb Markings

Section 3B— 1. Center Lines 212
3B— 2. Lane Lines 212
3B— 3. No-Passing Zones 213
3B— 4. Application of No-Passing Zone Signs and/or Markings 213
3B— 5. Warrants for No-Passing Zones at Curves 214
3B— 6. Pavement Edge Lines 215
3B— 7. Pavement Marking Extensions Through Intersections or Interchanges 215
3B— 8 Lane Reduction Transitions 215
3B— 9. Channelizing Line 216
3B—10. Median Islands Formed by Pavement Markings 216
3B—11. Markings of Interchange Ramps 216
3B—12. Combination Lane and Center Line Markings for Unique Applications 217
3B—13. Approach to an Obstruction 217
3B—14. Stop Lines 218
3B—15. Crosswalks and Crosswalk Lines 218
3B—16. Approach to Railroad Crossing 219
3B—17. Parking Space Markings 220
3B—18. Pavement Word and Symbol Markings 220
3B—19. Curb Markings for Parking Restrictions 221
3B—20. Preferential Lane Markings 222

C. Object Markings

Section 3C— 1. Object Marker Design 241
3C— 2. Objects in the Roadway 241
3C— 3. Objects Adjacent to the Roadway 242
3C— 4. End of Roadway Marker 242

D. Delineation

Section 3D— 1. Delineators 243
3D— 2. Design 243
3D— 3. Curb Markings for Delineation 243
3D— 4. Delineator Application 243
3D— 5. Delineator Placement and Spacing 244

E. Colored Pavements

Section 3E— 1. Colored Pavements 248
3E— 2. Colors 248

F. Barricades

Section 3F— 1. Barricades 248

Part IV — SIGNALS

A. General

Section 4A— 1. Types 249
4A— 2. Basis of Installation 249

B. Traffic Control Signals

Section 4B– 1. General Aspects 250
4B– 2. Area of Control 250
4B– 3. Advantages and Disadvantages of Traffic Control Signals 250
4B– 4. Portable Traffic Control Signals 251
4B– 4A. Ramp Metering Signals 251
4B– 5. Meaning of Signal Indications 252
4B– 6. Application of Signal Indications 254
4B– 7. Number of Lenses per Signal Face 255
4B– 8. Size and Design of Signal Lenses 255
4B– 9. Arrangement of Lenses in Signal Faces 256
4B–10. Illumination of Lenses 258
4B–11. Visibility and Shielding of Signal Faces 258
4B–12. Number and Locations of Signal Faces 259
4B–13. Height of Signal Faces 261
4B–14. Transverse Location of Traffic Signal Supports and Controller Cabinets 261
4B–15. Vehicle Change Interval 262
4B–16. Unexpected Conflicts During Green Interval 262
4B–17. Coordination of Traffic Control Signals 263
4B–18. Flashing Operation of Traffic Control Signals 263
4B–19. Continuity of Operation 264
4B–20. Signal Operation Must Relate to Traffic Flow 264
4B–21. Traffic Signals Near Grade Crossings 264
4B–22. Priority Control of Traffic Signals 266
4B–23. Maintenance of Traffic Control Signals 266
4B–24. Painting 267
4B–25. Vehicle Detectors 267
4B–26. Auxiliary Signs 267
4B–27. Prohibition of Confusing Advertising Lights, Signs and Advertising on Traffic Signs or Signals 268

C. Warrants

Section 4C– 1. Advance Engineering Data Required 269
4C– 2. Warrants for Traffic Signal Installation 270
4C– 3. Warrant 1, Minimum Vehicular Volume 271
4C– 4. Warrant 2, Interruption of Continuous Traffic 272
4C– 5. Warrant 3, Minimum Pedestrian Volume 272
4C– 6. Warrant 4, School Crossing 273
4C– 7. Warrant 5, Progressive Movement 274
4C– 8. Warrant 6, Accident Experience 274
4C– 9. Warrant 7, Systems Warrant 275
4C–10. Warrant 8, Combination of Warrants 275
4C–11. Factors Governing Selection of Type of Control 276
4C–12. Pedestrian-Actuated Control 276

D. Pedestrian Signals

Section 4D– 1. Pedestrian Signal Indications 277
4D– 2. Meanings of Pedestrian Indications 277
4D– 3. Applications of Pedestrian Signal Indications 277
4D– 4. Design Requirements 278

4D— 5. Location 278
4D— 6. Detectors 280
4D— 7. Pedestrian Intervals and Phases 280

E. Other Highway Traffic Signals

Section 4E— 1. Hazard Identification Beacon 282
4E— 2. Speed Limit Sign Beacon 282
4E— 3. Intersection Control Beacon 282
4E— 4. Stop Sign Beacon 286
4E— 5. General Design and Operation of Beacons 286
4E— 6. Hazard Identification Beacon Location 286
4E— 7. Intersection Control Beacon Location 287
4E— 8. Lane-Use Control Signals 287
4E— 9. Meaning of Lane-use Control Signal Indications 288
4E—10. Design of Lane-use Control Signals 288
4E—11. Location of Lane-use Control Signals 289
4E—12. Operation of Lane-use Control Signals 289
4E—13. Traffic Signals at Drawbridges 290
4E—14. Application of Drawbridge Signals 290
4E—15. Design of Drawbridge Signals 290
4E—16. Location of Drawbridge Signals 291
4E—17. Operation of Drawbridge Signals 291
4E—18. Traffic Signals For Emergency Vehicle Movements 292
4E—19. Applications of Emergency Traffic Signals 292
4E—20. Design of Emergency Traffic Signals 293
4E—21. Operation of Emergency Traffic Signals 293

F. Train-Approach Signals and Gates

Section 4F— 1. Railroad-Highway Grade-Crossing Protection 294
4F— 2. Application of Railroad Grade-Crossing Signals, Gates and Variable Signs 294
4F— 3. Proper Motorist Response to Railroad-Highway Grade-Grossing Signals 295
4F— 4. Types of Control, Design, Location, Installation, Operation and Maintenance 295

G. Traffic Signals for One-Lane, Two-Way Facilities

(Bridges, Tunnels, etc.) 296

Part V — ISLANDS

A. General

Section 5A— 1. Scope of Island Standards 297
5A— 2. Legal Authority 297
5A— 3. Classification and Function 297
5A— 4. Pedestrian Refuge Islands 297
5A— 5. Traffic Divisional Islands 298
5A— 6. Traffic Channelizing Islands 298

B. Design

Section 5B— 1. General 299
5B— 2. Size and Shape 299
5B— 3. Designation of Island Areas 302

C. Approach End Treatment

Section 5C– 1. General 303
5C– 2. Method 303

D. Illumination

. 304

E. Signs

Section 5E– 1. General 305
5E– 2. Application 305

F. Markings

Section 5F– 1. General 307
5F– 2. Application 307
5F– 3. Colors 307
5F– 4. Object Markers 307
5F– 5. Delineators 307

Part VI – TRAFFIC CONTROLS FOR STREET AND HIGHWAY CONSTRUCTION AND MAINTENANCE OPERATIONS

A. Introduction and General Specifications

Section 6A– 1. Need for Standards 309
6A– 2. Scope 309
6A– 3. Application of Standards 309
6A– 4. Responsibility 310
6A– 5. General Requirements 311

B. Signs

Section 6B– 1. Design of Signs 312
6B– 2. Illumination and Reflectorization 312
6B– 3. Position of Signs 312
6B– 4. Erection of Signs 330

Regulatory Signs

6B– 5. Authority 330
6B– 6. Design 330
6B– 7. Application 331
6B– 8. Road (Street) Closed Sign (R11-2) 332
6B– 9. Local Traffic Only Signs (R11-3, 4) 332
6B–10. Weight Limit Signs (R12-1, 2) 333
6B–11. Special Regulatory Signs 333

Warning Signs

6B–12. Function 334
6B–13. Design and Application 334
6B–14. Application of Construction Approach Warning Signs 335

6B–15. Advance Construction Sign (W20-1) 335
6B–16. Advance Detour Sign (W20-2) 335
6B–17. Advance Road (Street) Closed Sign (W20-3) 336
6B–18. Advance One Lane Road Sign (W20-3) 336
6B–18A. Advance Yield To Oncoming Traffic Sign (W20-4a) 336
6B–19. Advance Lane Closed Sign (W20-5) 337
6B–20. Advance Flagman Sign (W20-7) 337
6D–20A. Be Prepared To Stop Sign (W20-7a) 338
6B–21. Two-Way Traffic Sign (W6-3) 338
6B–22. Application of Maintenance and Minor Construction Warning Signs 338
6B–23. Men Working Sign (W21-1) 341
6B–24. Fresh Oil Sign (W21-2) 341
6B–25. Road Machinery Sign (W21-3) 341
6B–26. Road Work Sign (W21-4) 342
6B–27. Shoulder Work Sign (W21-5) 342
6B–28. Survey Crew Sign (W21-6) 342
6B–29. Signs for Blasting Areas 343
6B–30. Blasting Zone Sign (W22-1) 343
6B–31. Turn Off 2-Way Radios Sign (W22-2) 344
6B–32. End Blasting Zone Sign (W22-3) 344
6B–33. Other Warning Signs 344
6B–34. Advisory Speed Plate (W13-1) 345

Guide Signs

6B–35. Function and Design of Information and Guide Signs 345
6B–36. Length of Construction Zone Sign (G20-1) 345
6B–36A. Construction Zone Sign (G20-1a) 346
6B–37. Construction Zone Ends Sign (G20-2) 346
6B–38. Signs Used for Detours (M4-8, 8a, 9, 10) 347
6B–39. Pilot Car Sign (G20-4) 348

C. Barricades and Channelizing Devices

Section 6C– 1. Function 349
6C– 2. Barricade Design 349
6C– 3. Cone Design 351
6C– 4. Drum Design 351
6C– 5. Vertical Panel Design 353
6C– 6. Barricade Construction 353
6C– 7. Barricade Application 354
6C– 8. Barrel or Drum Application 357
6C– 9. Traffic Cone Application 357
6C–10. Delineator Application 358
6C–11. Pavement Markings Application 358
6C–12. Channelization 359

D. Lighting Devices

Section 6D– 1. Function 361

6D– 2. Floodlights 361
6D– 3. Hazard Identification Beacons (Flashing Electric Lights) 361
6D– 3A. Overhead Barricade Beacon 362
6D– 3B. Warning Sign With Flasher and Illumination 362
6D– 4. Steady Burning Electric Lamps 363
6D– 5. Barricade Warning Lights 363
6D– 6. Flashing Arrow Panel 364
6D– 6A Lane-Use Control Signals 365
6D– 7. Lanterns or Torches 365

E. Control of Traffic Through Work Areas

Section 6E– 1. Function 366
6E– 2. Hand Signaling Devices 366
6E– 3. Flagmen 366
6E– 4. Flagging Procedures 367
6E– 5. Flagman Stations 369
6E– 6. One-Way Traffic Control 369
6E– 7. Flagman Control 369
6E– 8. Flag-Carrying or Official Car 370
6E– 9. Pilot Car 370
6E–10. Traffic Control Signals 370

F. Expressways and Limited Access Facilities

Section 6F– 1. Application of Standards 372
6F– 2. Problem Areas 372
6F– 3. Signs 373
6F– 4. Barricades and Channelization 373
6F– 5. Lighting Devices 374
6F– 6. Control of Traffic 374

Part VII – TRAFFIC CONTROLS FOR SCHOOL AREAS

A. General

Section 7A– 1. Need for Standards 375
7A– 2. School Routes and Established School Crossings 377
7A– 3. School Crossing Control Criteria 377
7A– 4. Scope 378
7A– 5. Application of Standards 378
7A– 6. Engineering Study Required 378
7A– 7. Maintenance of Traffic Control Devices 378
7A– 8. Legal Authority 379
7A– 9. Prohibition of Confusing Advertising Lights, Signs and Advertising on Traffic Signs or Signals 379
7A–10. Meanings of "Shall," "Should" and "May" 379

B. Signs

Section 7B– 1. Design of Signs 380
7B– 2. Dimensions 380

7B– 3. Lettering 380
7B– 4. Sign Borders 380
7B– 5. Illumination and Reflectorization 380
7B– 6. Position of Signs 381
7B– 7. Height of Signs 381
7B– 8. Erection of Signs 381
7B– 9. School Advance Sign (S1-1) 381
7B–10. School Crossing Sign (S2-1) 382
7B–11. Stop for School Bus Loading or Unloading Sign (S3-2) 382
7B–12. School Speed Limit Signs (S4-1 through 4) 383
7B–13. Parking and Stopping Signs (R7 Series) 385

C. Markings

Section 7C– 1. Functions and Limitations of Markings 387
7C– 2. Standardization 387
7C– 3. Crosswalk Lines 387
7C– 4. Stop Lines 388
7C– 5. Curb Markings for Parking Restrictions 388
7C– 6. Word and Symbol Markings 388

D. School Area Traffic Signals

Section 7D– 1. Definition 390
7D– 2. Advantages and Disadvantages 390
7D– 3. Standardization 390
7D– 4. Warrants 391
7D– 5. Meaning of Signal Indications 391
7D– 6. Intersection and Non-intersection Installations 393
7D– 7. Controllers 393
7D– 8. Pedestrian Detectors 394
7D– 9. Operation of Pedestrian Signals 394
7D–10. Coordination with Adjacent Signals 395
7D–11. Vehicle Change Interval 396
7D–12. Location and Placement 396
7D–13. Visibility, Number and Location of Signal Faces 396
7D–14. Height of Signal Faces 398
7D–15. Transverse Location of Traffic Signal Supports and Controller Cabinets 398
7D–16. Portable Traffic Control Signals 398
7D–17. Area of Control 399
7D–18. Design Requirements for School Signal Indications 399
7D–19. Number of Lenses per Signal Face 399
7D–20. Size and Design of Signal Lenses 399
7D–21. Arrangement of Lenses in Signal Faces 399
7D–22. Illumination of Lenses in Vehicular Signal Faces 400
7D–23. Pedestrian Indications 400
7D–24. Speed Limit Sign Beacon 400
7D–25. School Crossings at Existing Signal Installations 401
7D–26. Signal Indications 401
7D–27. Signal Control 401
7D–28. Signal Operation 401

E. Crossing Supervision

Section 7E– 1. Types of Crossing Supervision 402
7E– 2. Adult Guards 402
7E– 3. Legal Authority for Adult Guards 402
7E– 4. Choice of Adult Guards 402
7E– 5. Safety Vest for Adult Guards 403
7E– 6. Operating Procedures for Adult Guards 403
7E– 7. Police Officers 404
7E– 8. Student Patrols 404
7E– 9. Legal Authority for Student Patrols 404
7E–10. Choice of Student Patrols 404
7E–11. Operating Procedures for Student Patrols 404

F. Grade Separated Crossings

Section 7F– 1. Function 405
7F– 2. Types of Grade Separated Crossings 405
7F– 3. Criteria for Use of Grade Separated Crossings 405

Part VIII–DEFINITIONS

Section 8A– 1. Definition of Words and Phrases 407
8A– 2. General Definitions 407
8A– 3. Definitions Relating to Signs 409
8A– 4. Definitions Relating to Markings 410
8A– 5. Definitions Relating to Signals 410
8A– 6. Definitions Relating to Islands 412

INDEX 413

ALPHABETICAL LISTING OF SIGNS

Sign	Code	Page
A		
Advance Guide, Diagramatic	E1-3	154
Advance Guide (Expr.-Fwy.)	E1-1	153
Advance Motorist Services (Expr.-Fwy.)	E11-14	194
Advance Road (Street)	D3-2	127
Advance Road (Street) (Expr.-Fwy.)	E11-3	163
Advance State Police and Sheriff	I7-1, 2	141b
Advance State Police and Sheriff (Expr.-Fwy.)	E11-2	163
Advance Turn Arrow (90°)	M5-1	116
Advance Turn Arrow (45°)	M5-2	116
Advisory Exit Speed	W13-2	96
Advisory Ramp Speed	W13-3	96
Advisory Speed	W13-1	95
Airport Trailblazer	I8-2	141c
All Traffic Must Turn	R6-4	56a
All Way	R1-4	34
Alternate	M4-1	113
Authorized Vehicles Only	R5-15	55
Axle Weight Limit (5) Tons	R12-2	69
B		
Barricade, Type I	B(I)-R(L)	350
Barricade, Type II	B(II)-R(L)	350
Barricade, Type III	B(III)-R(L)	350
Begin One Way	R6-3	56a
Be Prepared to Stop	W20-7a	338
Bike Route	D11-1	136
Bike X-ing	W11-1	90a
Blasting Zone	W22-1,2,3	344
Bridge Weight Limit	W12-4,5,5a,6,7	69
Bump	W8-1	87
Business	M4-3	113
Business Loop (Spur) Marker	M1-2,3	104
Business District	I4-1,2	141
Bus Stop	R7-6a	58a
Bus Station	I8-3	141c
By-Pass	M4-2	113
C		
Camping	D9-3	134
Cardinal Direction Panels	M3 Series	I11
Cattle X-ing	W11-4	90a
Center Lane — Left Turn Only	R3-9	45
Children Crossing	W11-12	90b
Combination Junction	M2-2	111
Community Limit	I2-4	140
Commercial Vehicles Excluded	R5-4	54
Complete Left Turn When Traffic Clears	R3-12	47
Construction Ahead	W20-1	335

(Rev. 1)
(Rev. 2)
(Rev. 3)

Sign	Code	Page
Construction Zone	G20-1a	346
Construction Zone Ends	G20-2	346
Corporate Limit	I2-3	139
Corporate Limit (Expr.-Fwy.)	E11-5	165
County Line	I2-2	139
County Line (Expr.-Fwy.)	E11-6	165
County Route Marker	M1-5	105
Cross on Green Light Only	R10-1	65
Cross on Walk Signal Only	R10-2	65
Cross Only at Crosswalks	R9-2	64
Crossroad	W2-1	78
Crosswalk (overhead)	R10-11	66
Curve	W1-2	75
D		
Dead End	W14-1	97
Deer X-ing	W11-3	90a
Destination and Direction	D1 Series	124
Destination and Direction	E11-4	164
Detour	M4-9	347
Detour Ahead	W20-2	335
Detour Arrow	M4-10	348
Detour Panel	M4-8	347
Dip	W8-2	87
Directional Arrow (90°)	M6-1	117
Directional Arrow (45°)	M6-2	117
Directional Arrow (0°)	M6-3	117
Directional Arrow (90°, Double-Headed)	M6-4	118
Directional Arrow (45°, Double-Headed)	M6-5	118
Directional Arrow (0°-90°, Double-Headed)	M6-6	118
Directional Arrow (0°-45°, Double-Headed)	M6-7	118
Divided Highway	W6-1	84
Divided Highway Ends	W6-2	84
Do Not Block Intersection	R10-7	66
Do Not Enter	R5-1	52
Do Not Pass	R4-1	48b
Double Arrow	W12-1	93
Double-turn	R3-8	45
E		
East	M3-2	112
Emergency Parking Only	M8-4	63
Emergency Signal	R10-12	66
Emergency Stopping Only	R8-7	63
End of Roadway Marker	ER-1	242
End One Way	R6-3a	56a
Ends	M6-8	114
Equestrian X-ing	W11-7	90a
Exit-Direction (Expr.-Fwy.)	E4-1	156
Exit-Direction (Overhead) (Expr.-Fwy.)	E6-1	158

(Rev. 1)
(Rev. 2)
(Rev. 3)

Sign	Code	Page
Exit-Gore (Expr.-Fwy.)	E5-1	157
Exit-Gore with Exit Number (Expr.-Fwy.)	E5-1a	157
Exit Number Panel (Expr.-Fwy.)	E1-2	153
Exit Only Panels	E11-1	163
F		
Factory Entrance	W11-11	90b
Farm Machinery	W11-5	90a
Flagman Ahead	W20-7	337
Food	D9-8	134
Four-Way	R1-3	34
Freeway Ends	W6-4	85
Fresh Oil (Tar)	W21-2	341
G		
Gas	D9-7	134
H		
Handicapped, symbol	D9-6	133
Hiking Trail	I8-1	141c
Hill	W7-1	86
Historical Marker	I5-1,2,3	141
Hospital	D9-2	133
I		
Institution	I6-1	141a
Institution Direction	I6-2	141a
Interchange Sequence	E8 Series	160
Interstate Route Marker	M1-1	104
J		
Junction Marker	M2-1	110
K		
Keep Left	R4-8	51
Keep Off Median	R11-1	67
Keep Right	R4-7	51
Keep Right (overhead)	R4-9	51
Keep Right Except to Pass	R4-5a	49
L		
Lake Name	I3-2	140
Lake Name (Expr.-Fwy.)	e11-8	165
Lane Ends Merge Left (Right)	W9-2	82
Lane-Use Control	R3-5, 6	45
Left (Right) Lane Must Turn Left (Right)	R3-7	45
Left (Right) Lane Must Exit (Expr.-Fwy.)	R3-7a	45
Left Turn Lane	R3-10	46
Limited Sight Distance	W14-4	98
Litter Barrel	D5-5b	130

(Rev. 1)
(Rev. 2)
(Rev. 3)

Sign	Code	Page
Lodging	D9-9	134
Low Clearance	W12-2,3	95
M		
Maintenance Garage or Sign Shop	I6-3	141a
Men Working	W21-1	341
Merging Traffic	W4-1	82
Michigan State Line	I2-1	139
Michigan Route Marker	M1-6	104
Mileage	D2 Series	126
Mileage (Expr.-Fwy.)	E7-1	160
Milepost	D10 Series	135
Minimum Speed	R2-4	40
Motor Vehicles Only	R5-11	54
Motorist Services (Expr.-Fwy.)	E11-14	194
Motorist Services Ramp Directional (Expr.-Fwy.)	E11-15	195
N		
Narrow Bridge	W5-2	83
National Forest Route Marker	M1-7	105
Next ——— Exits	E9-1	161
Next Exit ——— Miles (Expr.-Fwy.)	E2-1	154
Next Right	E4-2	156
Night Speed	R2-3	39
No Bicycles	R5-6	54
No Hitchhiking	R9-4	63
No Left Turn	R3-2	42
No Outlet	W14-2	97
No Parking	R7 Series	58
No Parking (Rural)	R8 Series	62
No Passing Zone	W14-3	97
No Pedestrian Crossing	R9-3	64
No Right Turn	R3-1	42
No Trucks	R5-2	53
No Turn on Red	R10-9	66
No Turns	R3-3	42
No U Turn	R3-4	43
North	M3-1	111
O		
Object Marker	OM-1, 2, 3	241
One Lane Bridge	W5-3	83
One Lane Road Ahead	W20-4	336
One Way	R6-1, 2	56
P		
Parking (Directional)	D4-1	128
Parking Area (Advance)	D5-3	129
Parking Area (Directional)	D5-4	129
Parking Regulation (Urban)	R7 Series	58

(Rev. 1)
(Rev. 2)
(Rev. 3)

Sign	Code	Page
Parking Regulation (Rural)	R8 Series	62
Pass With Care	R4-2	48b
Pavement Ends	W8-3	87
Pavement Width Transition	W4-2	82
Pedestrian X-ing	W11-2	90a
Pedestrians Prohibited	R5-3	53
Pilot Car Follow Me	G20-4	348
Playground	W11-13	91
Preferential Lane	R3-14, 15	48a
Prohibited (Special Vehicles)	R5-12, 13	54
Push Button for Green Light	R10-3	65
Push Button for Walk Signal	R10-4	65
R		
Railroad Advance Warning	W10-1	98
Railroad Crossbuck	R15-1	71
Ramp Directional (Destination)	E11-4	164
Ramp Directional — Motorist Services (Expr.-Fwy.)	E11-15	194
Recreation Area	D7-1, 2	131
Reduced Speed Ahead	R2-5a	41
Reduced Speed ——— M.P.H.	R2-5b	41
Rest Area (Directional) (Expr.-Fwy.)	D5-2, 2a	129
Rest Area ——— Mile(s) (Expr.-Fwy.)	D5-1	129
Rest Area Parking	R5-16	55
Reverse Curve	W1-4	76
Reverse Turn	W1-3	76
Right (Left) Lane Ends	W9-1	82
Right (Left) Lane Closed Ahead	W20-5	337
Road Closed	R11-2	67
Road Closed to Thru Traffic	R11-4	68
Road Closed ——— Miles Ahead (Local Traffic Only)	R11-3	68
Road Construction ——— Miles	G20-1	346
Road Ends	W14-2a	97
Road Machinery Ahead	W21-3	341
Road Narrows	W5-1	83
Road Work Ahead	W21-4	342
Roadside Table	D5-5, 5a	130
S		
Scenic Area	D6-1, 2, 3	130
School Advance	S1-1	382
School Crossing	S2-1	382
School Speed Limit	S4-1, 3, 4	383
Seasonal Load and Speed Restrictions in Effect	R12-3	69
Side Road	W2-2, 3	79
Sign Shop or Maintenance Garage	I6-3	141a
Signal Ahead	W3-3	81
Sheriff Department Office	I7-4	141b
Shoulder Work	W21-5	342
Signal Movement Identification	R3-11	46
Slippery When Wet	W8-5	88

Sign	Code	Page
Slower Traffic Keep Right	R4-3	49
Snowmobile Crossing	W11-6	90a
Snowmobile Route	D11-2	137
Soft Shoulder	W8-4	88
South	M3-3	112
Speed Limit	R2-1	38
Speed Limit (Statewide)	R2-3a	39
Speed Limit (Minimum-Maximum) (Expr.-Fwy.)	R2-4a	40
Speed Zone Ahead	R2-5c	41
State Line	I2-1	139
State Police Post	I7-3	141b
Stop	R1-1	34
Stop Ahead	W3-1	80
Stop Here on Red	R10-6	66
Stop — Slow Paddle	R1-1a	368
Stop for School Bus Loading or Unloading	S3-2	383
Stream Name	I3-1	140
Stream Name (Expr.-Fwy.)	E11-7	165
Street Closed Ahead	W20-3	336
Street Name	D3-1	127
Supplemental Guide (Expr.-Fwy.)	E3-1	155
Survey Crew	W21-6	342
T		
T-Symbol	W2-4	80
Target Arrow	W1-6, 7	78
Telephone	D9-1	133
Temporary	M4-7	115
Three Tracks	R15-2	71
Through Destination (Expr.-Fwy.)	E6-2	158
Thru Traffic (Expr.-Fwy.)	E6-2	158
To	M4-5	114
Tow-Away Zone	R7-9	59
Township Line	I2-2a	139
Traffic Signal Speed	I1-1	138
Train Stations	I8-4	141c
Truck	M4-4	113
Truck Crossing	W11-10	90b
Truck Lane Ahead	R4-6	49
Truck Route	R14-1	70
Truck Speed Limit	R2-2	38
Trucks Use Lower Gear	W7-2b	86
Trucks Use Right Lane	R4-5	49
Turn	W1-1	75
Turn Right (Left) Only	R3-13	47
Two-Way, Left-Turn Lane (Overhead)	R3-9a	45
Two-Way Traffic	W6-3	85
U		
U.S. Route Marker	M1-4	104

(Rev. 1)
(Rev. 2)
(Rev. 3)

Sign	Code	Page
Use Low Gear	W7-2a	86
Use 2nd Gear	W7-2	86
V		
Vehicles with Lugs Prohibited	R5-5	54
Vertical Panel	VP-1R(L)	352
Village Limit	I3-3a	139
W		
Walk on Left Facing Traffic	R9-1	63
Watch for Fire Trucks	W11-15	91
Watch for Ice on Bridge	W8-6	88
Watch for Oncoming Traffic	W20-4b	336
Watch for Pedestrians	W11-14	91
Watch for Ramp Traffic	W11-16	91
Weigh Station 1 Mile	D8-1	132
Weigh Station 1 Mile (Fwy.)	D8-1	197
Weigh Station Right Lane	D8-2	132
Weigh Station Right Lane (Fwy.)	D8-2	197
Weigh Station (Directional)	D8-3	132
Weigh Station (Directional) Fwy.)	D8-3	197
Weight Limit 5 Tons	R12-1	69
West	M3-4	112
Winding Road	W1-5	77
Wrong Way	R5-9	52
Y		
Y-Symbol	W2-5	80
Yield	R1-2	36
Yield Ahead	W3-2	80a
Yield to Oncoming Traffic	W20-4a	337

MICHIGAN MANUAL OF UNIFORM TRAFFIC CONTROL DEVICES

INTRODUCTION

Traffic control devices are all signs, signals, markings, and devices placed on or adjacent to a street or highway by authority of a public body or official having jurisdiction to regulate, warn, or guide traffic.

The need for high uniform standards was recognized long ago. The American Association of State Highway Officials (AASHO) published a manual for rural highways in 1927 and the National Conference on Street and Highway Safety published a manual for urban streets in 1929. But the necessity for unification of the standards applicable to different road and street systems was obvious. To meet this need, a joint committee of the American Association of State Highway Officials and the National Conference on Street and Highway Safety developed, and published in 1935, the original edition of the National "Manual on Uniform Traffic Control Devices"(MUTCD). That committee, though changed from time to time in organization and personnel, has been in continuous existence and has been responsible for periodic revisions to the National MUTCD.

The first "Michigan Manual of Uniform Traffic Control Devices" was issued in 1939 by State Highway Commissioner Murray D. Van Wagoner and State Police Commissioner Oscar G. Olander. The Michigan Manual was revised and expanded in 1953, and again in 1963. This, then, is the fourth edition of the "Michigan Manual of Uniform Traffic Control Devices".

In the interest of national uniformity, the Michigan Manual is patterned after and, insofar as Michigan law will permit, conforms very closely with the 1971 edition of the National MUTCD, issued by the Federal Highway Administration of the U.S. Department of Transportation.

This 1973 edition of the Michigan Manual, under the provisions of the Michigan Vehicle Code (Act 300, P.A. 1949, as amended), revises the standards for traffic control devices for use in the State of Michigan and supersedes all previous editions. Unless otherwise provided either herein or by federal compliance schedules, all traffic control devices hereafter erected shall conform to this Manual.

In recognition of the proven international value and need for symbols, and to present a uniform and better understood system of signing, this 1973 revision includes a wider use of symbols, both in the regulatory and warning series. Color coding is employed more extensively in signs and to define direction of travel by pavement markings.

PART I. GENERAL PROVISIONS

1A-1 Requirements of Traffic Control Devices

This Manual sets forth the basic principles that govern the design and usage of traffic control devices. These principles appear throughout the text in discussions of the devices to which they apply, and it is important that they be given primary consideration in the selection and application of each device.

The Manual presents traffic control device standards for all streets and highways regardless of type or class or the governmental agency having jurisdiction. Where a device is intended for limited application only, or for a specific system, the text specifies the restrictions on its use.

To be effective, a traffic control device should meet five basic requirements. They are:

1. Fulfill a need.
2. Command attention.
3. Convey a clear, simple meaning.
4. Command respect of road users.
5. Give adequate time for proper response.

In the case of regulatory devices, the actions required of motorists and pedestrians are specified by State statute or by local ordinance or resolution. Uniformity of meaning is vital to effective traffic control devices. Meanings ascribed to devices in this Manual are in accord with the Michigan Vehicle Code.

Five basic considerations are employed to insure that these requirements are met. They are: design, placement, operation, maintenance, and uniformity.

Design of the device should assure that such features as size, contrast, colors, shape, composition, and lighting or reflectorization are combined to draw attention to the device; that shape, size, colors, and simplicity of message combine to produce a clear meaning; that legibility and size combine with placement to permit adequate time for response; and that uniformity, reasonableness of the regulation, size and legibility combine to command respect. In the design of a device, minor modifications of the specified design elements may be made as necessary to fit special conditions, provided that the essential appearance characteristics are met.

Placement of the device should assure that it is within the cone of vision of the user so that it will command attention, that it is positioned with respect to the point, object, or situation to which it applies to aid in

conveying the proper meaning; and that its location, combined with suitable legibility, is such that a driver traveling at normal speed has adequate time to make the proper response.

Operation or application should assure that appropriate devices and related equipment are installed to meet the traffic requirements at a given location. Furthermore, the device must be operated and placed in a uniform and consistent manner to assure, to the extent possible, that the motorist can be expected to respond properly to the device, conditioned by his previous exposure to similar traffic control situations.

Maintenance of devices should be to high standards to assure that legibility is retained, that the device is visible, and that it is removed if no longer needed. Clean legible, properly mounted devices in good working condition command the respect of motorists and pedestrians. In addition to physical maintenance, functional maintenance is required to adjust needed traffic control devices to current conditions and to remove those which are not needed. The fact that a device is in good physical condition should not be a basis for deferring needed replacement or change. Furthermore, carelessly executed maintenance can destroy the value of a group of devices by throwing them out of balance. For example, replacement of a sign in a group or series by one that is disproportionately large may tend to deprecate others in the vicinity.

Uniformity of traffic control devices simplifies the task of the road user because it aids in recognition and understanding. It aids road users, police officers, and traffic courts by giving everyone the same interpretation. It aids public highway and traffic officials through economy in manufacture, installation, maintenance and administration.

Simply stated, uniformity means treating similar situations in the same way. The use of uniform traffic control devices does not, in itself, constitute uniformity. A standard device used where it is not appropriate is as objectionable as a nonstandard device; in fact, it may be worse, in that such misuse may result in disrespect for the device at those locations where it is used properly.

1A-2 Responsibility for Traffic Control Devices

The responsibility for traffic control devices rests with many governmental jurisdictions. However, traffic control devices placed and maintained by State and local officials are required by statute to conform to the Michigan Manual of Uniform Traffic Control Devices. Section 608 of the Michigan Vehicle Code contains the following pertinent provision:

> "The state highway commissioner and commissioner of state police shall adopt a manual and specifications for a uniform system of traffic-control devices consistent with the provisions of this chapter for use upon highways within this state. Such uniform system shall

correlate with and so far as possible conform to the system then current as approved by the American Association of State Highway Officials and such manual may be revised whenever necessary to carry out the provisions of this act. It is hereby declared to be the policy of the state of Michigan to achieve, insofar as is practicable, uniformity in the design, and shape and color scheme of traffic signs, signals and guide posts erected and maintained upon the streets and highways within the state with other states."

1A-3 Engineering Study Required

The decision to use a particular device at a particular location should be made on the basis of an engineering study of the location, notwithstanding requirements specified throughout this Manual. Thus, while this Manual provides standards for design and application of traffic control devices, the Manual is not a substitute for engineering judgment.

Qualified engineers are needed to exercise the engineering judgment inherent in the selection of traffic control devices, just as they are needed to locate and design the roads and streets which the devices complement. Jurisdictions with responsibility for traffic control that do not have qualified engineers on their staffs should seek assistance from the Michigan Department of State Highways, their county, a nearby large city, or a qualified traffic engineering consultant.

1A-4 Meanings of "Shall," "Should" and "May"

In the Manual sections dealing with the design and application of traffic control devices, the words "shall," "should" and "may" are used to describe specific conditions concerning these devices. To clarify the meanings intended in this Manual by the use of these words, the following definitions apply:

1. SHALL – A mandatory condition. Where certain requirements in the design or application of the device are described with the "shall" stipulation, it is mandatory when an installation is made that these requirements be met.
2. SHOULD – An advisory condition. Where the word "should" is used, it is considered to be advisable usage, recommended but not mandatory.
3. MAY – A permissive condition. No requirement for design or application is intended.

1A-5 Developing New Standards and Interpretation and Revision of Existing Standards

Advances in technology will produce changes in the highway, the motor vehicle, and in driver proficiency. As a result, portions of the system

of control devices shown in this Manual will gradually become obsolete. In addition, unique situations often arise for device applications which may require interpretation or clarification of this Manual. It is important to have a procedure for recognizing these developments and for introducing new ideas and modifications into the system.

The following procedure will generally apply to the handling of interpretations, experimentation, and changes to the Michigan Manual of Uniform Traffic Control Devices.

1. A written request for clarification, permission to experiment, or change in Manual provisions should be forwarded to the Michigan Department of State Highways. When the request cannot be resolved at the State level, and it is judged the item can best be handled by the Federal Highway Administration, it will be processed through the American Association of State Highway Officials in accordance with Federal Highway Administration procedures.

2. All requests should contain the following information:

a. A brief statement indication what change, modification, or question is to be resolved.

b. Any illustrations which would help to explain the request.

c. Any supporting research data which is pertinent to the item to be reviewed.

3. Rulings on requests will be given as:

a. Interpretation — this would generally be a clarification of intended applications of Manual requirements for specific situations.

b. Approval as an alternate — this would be permission to use a new device or modification, even though the Manual prescribes a device for the same purpose. Generally, it would be expected that the proposed alternate would offer advantages over the device prescribed in the Manual.

c. Approval for experimentation — this would be permission to use, for test and evaluation, an unproven device or modification which appeared to be a sound idea. The type of information to be gathered during the test and evaluation of the device would be stated as part of the request and the gathering of these data would be a conditional part of the approval.

4. The Michigan Department of State Highways will be responsible for acknowledgement of all requests and dissemination of official rulings to the appropriate authority. When rulings involve changes in Michigan Manual provisions, revisions to this Manual will be issued. Generally, an annual revision will be issued including all changes for the preceding calendar year.

1A-6 Relation to Other Documents

Two publications are specifically designed to provide the content and language of legislation needed to give regulatory devices the same meaning in all jurisdictions. These are the Michigan Vehicle Code and the Uniform Traffic Code for Cities, Townships and Villages. Both Codes require the placing of signs or other traffic control devices to make some of their provisions effective, and both define the legal meaning of certain devices. The Michigan Vehicle Code directs State authorities to adopt a manual for a uniform system of traffic control devices, and the Uniform Traffic Code for Cities, Townships and Villages requires devices under municipal jurisdiction to conform thereto.

The standards in the Manual for Signing and Pavement Marking of the National System of Interstate and Defense Highways, published by the American Association of State Highway Officials, have been incorporated herein for freeway application, providing one document for all streets and highways.

Other documents, to the extent they are incorporated by specific reference, are made part of this Manual:

Standard Alphabets – Federal Highway Administration, 1966

Standard Color Charts – Federal Highway Administration, 1970

Standard Highway Signs – Federal Highway Administration or Michigan Department of State Highways

Institute of Traffic Engineers, Adjustable Face Vehicle Traffic Control Signal Head Standards, 1970

Association of American Railroads, Bulletin 6, Railroad Highway Grade Crossing Protection, 1966

Institute of Traffic Engineers, Adjustable Face Pedestrian Signal Head Standard, 1963

Other documents that are useful sources of information with respect to utilization of these standards include:

Traffic Engineering Handbook – Institute of Traffic Engineers

Highway Capacity Manual – Highway Research Board

A Policy on Geometric Design of Rural Highways – American Association of State Highway Officials

A Policy on Arterial Highways in Urban Areas – American Association of State Highway Officials

Manual of Traffic Engineering Studies – Institute of Traffic Engineers

Volume 12, Highway Safety Program Manual, Highway Design Construction and Maintenance, Federal Highway Administration

Volume 13, Highway Safety Program Manual, Traffic Control Devices, Federal Highway Administration

1A-7 Color Code

The following color code establishes general meanings for eight colors in a total of twelve colors that have been identified as being appropriate for use in conveying traffic control information. Central values and tolerance limits for each color are available. [1]

The four colors for which no meaning has been assigned are being reserved for future applications. The meanings described in this Section are of a general nature. More specific assignments of colors are given in the individual Parts of this Manual relating to each class of devices.

Color Code:

RED–Stop or prohibition.
GREEN–Indicated movements permitted, direction guidance.
BLUE–Motorist services guidance.
YELLOW–General warning.
BLACK–Regulation.
WHITE–Regulation.
ORANGE–Construction and maintenance warning.
PURPLE–Unassigned
BROWN–Public recreation and scenic guidance.
STRONG YELLOW-GREEN–Unassigned.
LIGHT BLUE–Unassigned.
CORAL–Unassigned.

---

[1] Available from the Federal Highway Administration, Washington, D.C. 20591.

2D-1 Scope of Conventional Road Guide Sign Standards

Specifications for Conventional Road Guide Signs prescribed herein shall apply to any road or street other than an expressway or freeway.

2D-2 Application

Guide signs are essential to guide the motorist along streets and highways, to inform him of intersecting routes, to direct him to cities, villages, or other important destinations, to identify nearby rivers and streams, parks, forests, and historical sites, and generally to give him such information as will help him along his way in the most simple, direct manner possible.

2D-3 Color, Reflectorization, and Illumination

Except where otherwise specified herein for individual signs or groups of signs or markers, Guide signs on conventional roads and streets shall have a white message on a green background, or as an alternate for this class of roads only, a black message on a white background. In either case, there should be consistency of application on any given highway.

Requirements for reflectorization or illumination are stated under the specific headings for individual guide signs or groups of signs. General provisions are given in sections 2A-16 through 2A-18.

2D-4 Size of Signs

For most guide signs, the legend is so variable that there can be no rigidly standardized size. The sign size must be fixed primarily in terms of length of the message and the size of the lettering and spacing necessary for proper legibility. However, for signs with standardized designs, such as route markers, it is practicable to fix standard sizes.

Under some circumstances, particularly for overhead signs, the available space may limit sign width. A sign mounted over a particular roadway lane to which it applies may have to be limited in width to the width of the lane. Where vertical clearances are limited and standard sign design cannot be used, a reduced letter height, interline and edge spacing may be used. When a reduction in the standard size is necessary, the design used should be as nearly comparable to standards as possible.

2D-5 Lettering Style

The standard lettering for conventional highway signs is upper-case letters (sec. 2A-15). However, when letter height exceeds 8 inches, place names on guide signs should be composed of lower-case letters with an

initial upper-case letter. The initial upper-case letters shall be one and one-third time the "loop" height of the lower-case letters. Recommended designs have been developed for the upper-case and lower-case alphabets, together with tables of spacing.[4]

2D-6 Size of Lettering

For guide signs with varying legend, sign legibility is a direct function of letter size. The legibility distance must give the driver sufficient time to read the sign before he has passed it. Although, under the best conditions, a guide sign message can be read and understood in a brief glance, a reasonable safety factor must be allowed for inattention, blocking of view by other vehicles, unfavorable weather, inferior eyesight, or other causes for delayed or slow reading. On the other hand, the usual repetition of guide information on successive signs where conditions permit often gives a driver more than one opportunity to obtain the information he needs.

Though the reading time for any given sign varies greatly with the approach speed, standard lettering sizes should be consistent on any particular class of highways. The same conditions that induce lower speed – heavy traffic, frequent intersections or interchanges, unfavorable alignment, or extraneous distractions – usually create a need for greater legibility. Hence the size standards set forth are related to the type of highway rather than to variable speeds on any class of highways (Table II-1).

The minimum sizes specified should be exceeded where conditons indicate a need for greater legibility.

In rural districts on major routes, the principal legend on guide signs shall be in letters at least 7 inches in height. If desired, Destination signs (E11-4) and Mileage signs (E7-1) – standardized for special purposes on expressways and freeways – may be provided on conventional roads in rural districts for major highways. There should, however, be consistency of application for sign size on a given highway. On less important rural roads and on urban streets, the principal legend shall be in letters at least 5 inches high. Sign panels shall be large enough to accommodate the required legend without crowding.

Recommended layouts have been developed for standard highway signs showing interline, edge spacing and other specification detail. These layouts may be obtained from the Michigan Department of State Highways or from the Federal Highway Administration.

---

[4] Available from the Federal Highway Administration, Washington, D.C. 20591.

2D-7 Amount of Legend

Regardless of letter size, the legend on a guide sign must be kept to a minimum to be legible at a glance during the few moments that a driver can turn his eyes from the road. Guide signs should be limited to three lines of principal legend. Where two or more signs are included in the same overhead display, extra effort should be made to further reduce and simplify the amount of legend.

"Principal legend" here includes only place names, route numbers, and street names. Symbols, action information, cardinal directions and exit numbers may make up other lines of legend, within reasonable limits.

2D-8 Arrows and Symbols

Arrows are used on many guide signs to indicate the directions toward designated routes or destinations. Arrows are pointed at any desired angle to convey a clear comprehension of the direction to be taken. At right-angle intersections, a horizontal arrow is appropriate. On a roadside sign, a directional arrow for a straight-through movement should point upward. For a turn, the arrow should be pointed upward as will best describe the design of the intersection, and at an angle related to the sharpness of the turn.

On overhead signs where it is desired to indicate a lane to be followed, the arrow shall point downward toward the center of that lane. Where a roadway is leaving the through lanes, the arrow shall point upward at an angle representative of the alignment of the exit roadway. If required, the through roadway lanes will be identified by downward-pointing arrows.

Downward-pointing arrows shall be used only on overhead guide signs which restrict the use of specific lanes to traffic bound for the destination(s) and/or route(s) indicated by these arrows. Downward-pointing arrows shall not be used unless an arrow can be pointed to each lane that can be used to reach the destination shown on the sign.

Arrows may be placed below the other sign legend, or to one side of it. At an exit, an arrow at the far side of the sign may help to emphasize the directional significance of the sign. For adequate legibility, it is recommended that the width across the barbs of the arrrow be at least equal to the height of the largest letters on the sign, and for short downward-pointing arrows on overhead signs, about one and three-quarters times the letter height (figure 2-10).

Diagrammatic signing using arrows should approximate the intersection roadway geometrics, or the necessary part of it, in a clear, understandable manner to impart a glance-legible message (secs. 2E-20, 2E-24). Therefore, the standard arrow designs and applications may not be applicable to this type of signing. Other symbol designs should be essentially as shown in this Manual.

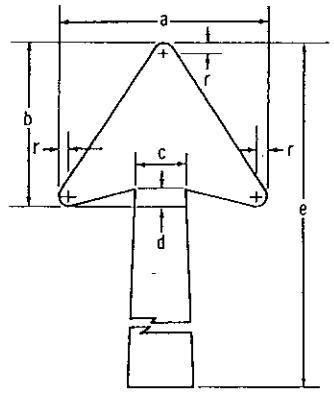

DIRECTIONAL ARROW

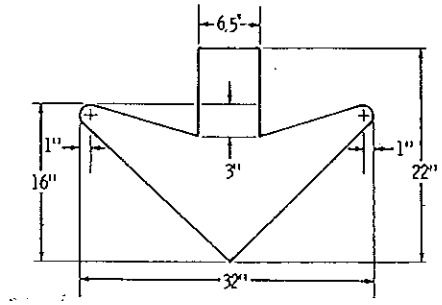

LANE ASSIGNMENT ARROW

Dimensions of Directional Arrow When Used With Various Letter Sizes

LETTER SIZE (Upper-Case)	Arrow Dimensions in Inches					
	a	b	c	d	e*	r
8"	8	5.51	1.90	0.74	10-14	0.44
10.67"	11	7.57	2.61	1.01	14-19	0.63
13.33"	14	9.64	3.32	1.29	17-23	0.75
16"	16	11.02	3.79	1.47	19-26	0.88

* Taper of ½" per ft. should be held constant for longer or shorter shaft lengths.

Figure 2–10. Dimensions of arrows on guide signs.

2D-9 Numbered Highway Systems

The purpose of numbering and marking highway systems is to identify routes and facilitate travel over the shortest and best roads.

The Interstate System and the United States (U.S.) System are numbered by the American Association of State Highway Officials, upon recommendation of the State highway departments. State and county systems are numbered by the appropriate authorities.

The basic guide for designating and numbering the U.S. System is the "Purpose and Policy in the Establishment and Development of United States Numbered Highways," published by the American Association of State Highway Officials.[5]

[5] Available from the American Association of State Highway Officials, 341 National Press Building, Washington, D.C. 20004.

The principles of this policy should be followed in establishing other systems, with effective coordination between adjacent jurisdictions. Care should be taken to avoid the use of numbers or other designations which have been assigned to Interstate, U.S. or State routes in the same area. Overlapping numbered routes should be avoided, and the systems shall be given preference in this order: Interstate, United States, State and County.

2D-10 Route Markers and Auxiliary Markers

Route markers shall be used to identify and mark numbered highways, including Federal, State, or County roads, and park, forest, and other public roads. The markers for each system of numbered highways, which are distinctive in shape and color, shall be used only on that respective system and the approaches thereto.

To accomplish their purpose, route markers are usually mounted in assemblies which are formed when the route markers are accompanied by any of the various types of auxiliary markers.

Route markers, as well as any auxiliary markers which accompany them, shall be reflectorized for nighttime visibility as detailed in subsequent sections.

2D-11 Design of Route Markers (M1-1 to M1-7)

The design of route markers shall be established by the authority having jurisdiction. Specifications and provisions are as follows:

1. The Interstate Route Marker for use on intersecting highways and roads approaching an interchange with an Interstate route shall consist of a cutout shield, with the route number in white letters on a blue background, the word INTERSTATE in white letters on a red background, and white border and may contain the State name in white letters on a blue background (fig. 2-11). A 24-inch by 24-inch size is prescribed to accommodate route numbers with one or two digits, and a 30-inch by 24-inch size for route numbers having three digits.

2. The Off-Interstate Business Route Marker shall consist of a cutout shield carrying the number of the connecting Interstate route and the words BUSINESS (LOOP or SPUR). The legend and border shall be white on a green background, and the shield shall be of the same shape and dimensions as the Interstate Route Marker previously described (fig. 2-11). In no instance is the word INTERSTATE to appear on the Off-Interstate Business Route Marker. This marker may be used on a major highway that is not a part of the Interstate System, but one that serves the business area of a city from interchanges on the System.

Interstate
Route Marker
M1–1
24" X 24" (2–digit)
30" X 24" (3–digit)
(1½" and 2½" letters)
(10" numerals)

Off-Interstate
Business Loop Marker
M1–2
24" X 24" (2–digit)
30" X 24" (3–digit)
(1½" and 2½" letters)
(10" numerals)

Off-Interstate
Business Spur Marker
M1–3
24" X 24" (2–digit)
30" X 24" (3–digit)
(1½" and 2½" letters)
(10" numerals)

3. The U.S. Route Marker shall consist of a rectangular 24-inch by 24-inch or 30-inch by 24-inch plate, with black numerals on a white shield surrounded by a black background without a border (fig. 2-12). This marker shall be used on all U.S. routes and in connection with route marker assemblies on intersecting highways.

4. The Michigan Route Marker shall consist of a rectangular 24-inch by 24-inch plate, with a black letter "M" and numerals on a white diamond surrounded by a black background without a border (fig. 2-13). This marker shall be used on all State routes and in connection with route marker assemblies on intersecting highways.

U.S.
Route Marker
M1–4
24" X 24" (2–digit)
30" X 24" (3–digit)
(12" numerals)

State Route Marker
M1–6
24" X 24"
(3½" block letter M)
(8" numerals)

5. Wherever County road authorities elect to establish and identify a special system of important County roads, County road identification markers are to be designed and used as specified in the publication "A

Proposal for a Uniform County Route Marker Program on a National Scale."[6] The Uniform County Route Marker shall be a pentagonal shape and shall consist of a reflectorized yellow legend (County name, route letter and number) and border on a reflectorized blue background, of a size compatible with other route markers used in common assemblies.

Signs of other designs may be used to designate County routes not a part of this special system of County roads, but such signs should be of a size comparable to the County Route Marker (M1-5).

6. The Forest Route Marker is designed in a trapezoidal shape and has white legend and border on a brown background. Its size shall be compatible with other route markers used in common assemblies. Forest Route Markers are intended for use on National park and forest roads.

County
Route Marker
M1–5
24" X 24"
(2" letters)
(8" route designation)

Forest Route Marker
M1–7
24" X 24"
(10" numerals)

Route markers of any type may be proportionally enlarged in any required size where greater legibility is needed. Where U.S. or State Route Markers are used as components of guide signs, only the outline of the shield or other distinctive shape should be used as shown in the illustration of the Combination Junction sign (sec. 2D-14).

Route markers shall be fully reflectorized as color design permits.

---

[6]Available from the National Association of Counties, Washington, D.C. 20006.

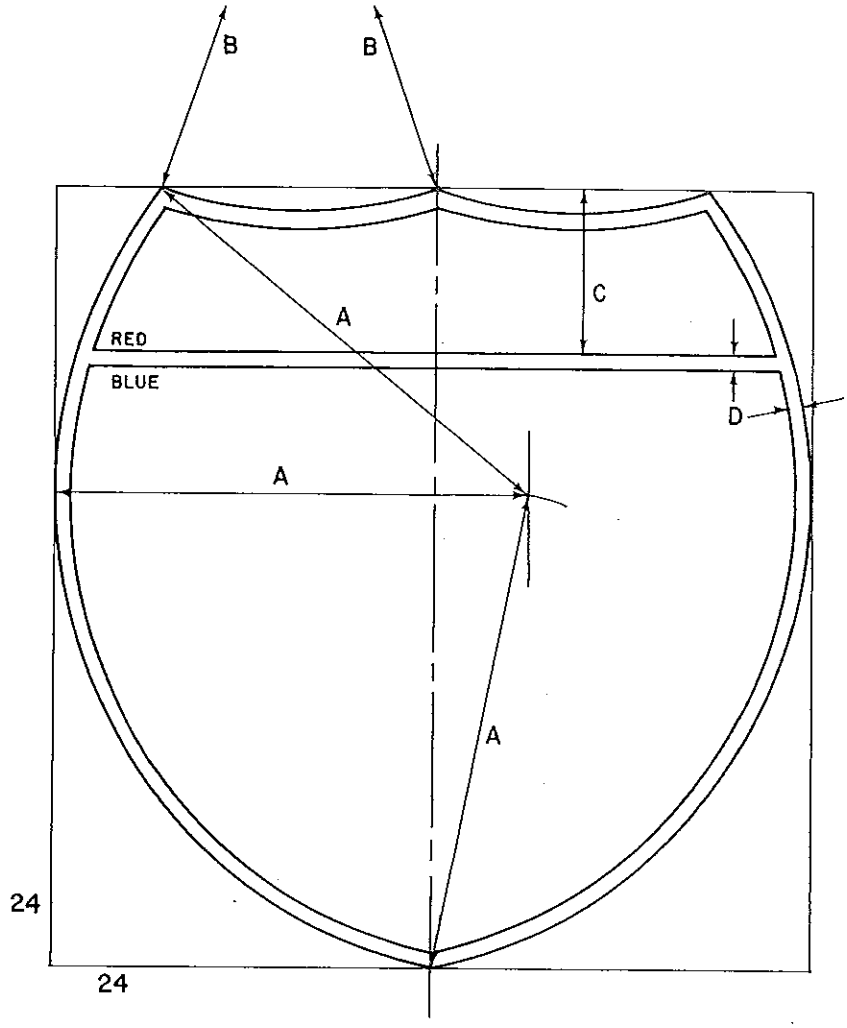

	A	B	C	D
24 X 24	15	15	5	1/2
30 X 24	17	24	5	1/2
36 X 36	22 1/2	22 1/2	7 1/2	3/4
45 X 36	25 1/2	36	7 1/2	3/4
48 X 48	30	30	10	1
60 X 48	34	48	10	1

Figure 2–11. Design of interstate and off-interstate route markers.

Exhibit 4 to MDOT's MSJ

U.S. Department of Transportation
Federal Highway Administration

FHWA Home | Feedback

Manual on Uniform Traffic Control Devices (MUTCD)

Knowledge

Knowledge

The Evolution of MUTCD

Information for this article was developed from a series of articles by H. Gene Hawkins, Jr. published in the ITE Journal published between 1991 and 1994. Dr. Hawkins also maintains a Web site that contains scans of old MUTCD editions and predecessors of the MUTCD dating from 1927 to 1988, as well as a great deal of other information of historical interest regarding traffic control devices.

The arrival of the automobile early in this century started a revolution in travel - and traffic control devices have developed to keep 20th century travelers moving ever more safely to their destinations. Road signs were the first traffic control devices to direct travelers on their journeys. The evolution of these road signs provides a fascinating insight not only into the evolution of traffic control devices, but also to the pace of economic and social development in our Nation.

The Horseless Carriage Arrives

It was a bit like the old saying about being "all dressed up, and no place to go." The early days of the automobile found intrepid "tourers" out for a drive, only to wind up losing their way because directional signs were either nonexistent or they were broken, unreadable, or knocked down. In fact, as early as 1899, horseless carriage owners in New York City met at the Waldorf-Astoria Hotel for the purpose of forming an automobile club - the predecessor of the American Automobile Association - and part of their function was to place and maintain signs on principal local highways to guide drivers through the area or to specific sites.

Records indicate that in 1905, the Buffalo Automobile Club installed an extensive signpost network in the New York State. In 1909, the Automobile Club of California undertook the task of signing the principal highways within a 250-mile radius of San Francisco. These could be actual signs, or perhaps they were colored bands around a utility pole. Similar clubs conducted comparable efforts in local areas around the Nation. Unfortunately, competition for signing certain popular routes was fierce and organizations became increasingly aggressive as to which club would sign which routes. One study noted that for 40 to 50 percent of the more traveled roads, it was common to encounter as many as 11 different signs for one single trail or route.

But First, Some Other Firsts

While automobile clubs were busy developing early road signs, other entities were developing devices to control the flow of traffic. For example:

- 1911, a centerline is painted on a Michigan road.
- 1914, the first electric traffic signal is installed in Cleveland.
- 1915, the first STOP sign appears in Detroit.
- 1916, the Federal-Aid Act requires that a State have a highway department before it can get Federal money.
- 1918, Wisconsin is the first state to erect official route signs as part of its maintenance functions.

- 1920, the first 3-color traffic signal is installed in Detroit.

The First Signs of the Times

In the early 1920s, representatives from Wisconsin, Minnesota, and Indiana toured several States with the intent of developing a basis for uniform signs and road markings. The group reported its findings to the Mississippi Valley Association of Highway Departments (MVASHD) in 1932. Their efforts resulted in standards for sign shapes, some of which are still in use as we enter the 21st century.

These pioneers devised a plan to classify sign shapes according to the level of danger represented by highway situations. For example, round signs warned of approaching railroad crossings, which even then represented the most potential danger to the driver. The octagon advised of the next level of danger - the need to STOP for intersections. Diamond signs indicated more ordinary conditions that required drivers to be cautious. Rectangular signs provided direction or other regulatory information. All signs were black letters on white background and were limited to 2 feet (0.6 m) square - that was the maximum width of sign-making equipment. Because round and octagon shapes required the most cutting and wastage, they were chosen for the fewest installations. These shapes made sense because there was little illumination of signs and the rationale was that drivers would respond to the shape of the sign even when they couldn't see the letters.

In 1924, the First National Conference on Street and Highway Safety (NCSHS) improved on earlier efforts and proposed standardizing colors for traffic control devices. Again, many remain in use today. For example, signs with white letters on a red background indicated STOP. White letters on a green background signified proceed. Black letters on a yellow background advised caution. Black and white signs providing information on direction and distance were specified for every intersection and junction. One combination that didn't last was white letters on purple background, indicating an intersection!

The First Signing Manual

Also in 1924, the American Association of State Highway Officials (AASHO, the forerunner of AASHTO) took earlier efforts one step further by issuing a report that combined the previous efforts to standardize sign shapes and colors. The report recognized the superior visibility of the yellow background and advised its adoption for all danger and caution signs, including the STOP sign. The use of red was rejected because of its inadequate visibility at night. This report was also the first to propose the shield to designate U.S. highways.

The importance of the AASHO report is that it became the basis for the first guidebook, *Manual and Specifications for the Manufacture, Display, and Erection of U.S. Standard Road Markers and Signs*, in 1927. However, this manual addressed only use and design for signs on rural roads. Following a national survey of existing traffic control devices, the *Manual on Street Traffic Signs, Signals, and Markings* was published to address urban traffic control devices. This manual corresponded with the AASHO rural manual, except that material also addressed traffic signals, pavement markings, and safety zones. The manual also allowed smaller signs in urban areas, and the STOP sign was modified to allow red letters on a yellow background.

MUTCD, Vol. 1

It was immediately apparent that having two different manuals simply confused the attempt to standardize traffic control devices. Thus in 1932, AASHO and NCSHS formed the first Joint Committee on Uniform Traffic Control Devices (JC). In 1935, the first MUTCD was published. More accurately, it was mimeographed. The demand for the manual was so great, that a printed version was published in 1937. In comparison to the *Millennium Edition*, the 1937 printed version was only166 pages; content was separated into four parts that addressed signs, markings, signals, and islands.

The 1935 edition set the standard for types of signs by classifying them as regulatory, warning, or guide signs. Regulatory signs were black on white rectangles (except the STOP sign was black on yellow or yellow on a red octagon); diamond-shaped slow-type signs warned drivers to slow down; signs that cautioned were square. The manual also promoted using symbols on signs because nighttime roadway illumination was becoming more common.

The 1935 MUTCD also defined some pavement markings. For example, centerlines were required only on approaches to hill crests with a clear view of less than 500 feet (152 m), short-radius curves, curves with restricted view, or pavements wider than 40 feet (12 m). Acceptable colors for centerlines were white, yellow, or black, depending on which provided the greatest contrast. It also supplied much-needed clarification on the number, color, and meaning of signal indications. The 3-color signal was adopted as the standard for signal lenses.

In November 1935, the first edition of MUTCD was approved as an American Standard.

MUTCD Editions Reflect Life in America

The 1935 MUTCD established the need for a manual that standardized the use and design of traffic control devices (TCDs). As the Nation grew and changed, the MUTCD has grown and changed. The manual has been revised approximately every decade to reflect that growth and change.

Early revisions were just that - supplements to the existing edition. For example, in 1939, the JC issued a 25-page supplement to the 1935 edition. The supplement recommended changes for sign illumination, speed signs, no-passing zone pavement markings, signal warrants, and pedestrian signals. And, although illumination was recommended, white reflectors (red for STOP signs) could be used to illuminate all signs.

The 1942, 208-page, MUTCD described the types of traffic control devices to be used during blackout conditions resulting from the war. Traffic control standards were not lowered for blackout conditions, but rather special blackout devices were to be used where necessary. For example, reflectorized beads were required for use on all pavement markings required for blackout conditions. Pavement markings were also used in lieu of many signs that would normally be illuminated. This, by the way, was the advent of using word messages in pavement markings.

As the end of the war neared, traffic engineers realized that the MUTCD had to be completely rewritten. Work on a peacetime edition began in 1944, and a new volume was published in 1948. The major format change in the postwar edition was reorganizing material so that every control device was addressed in only one place. There was also a concerted effort to simplify word signs, and a rounded-letter alphabet was adopted as standard for all signs.

The 1954 15-page supplement to the 1948 MUTCD included 47 revisions and a brief description of each. The most significant change is that the color for the STOP sign was white letters on red background, which resulted primarily from the development of new fade-resistant finishes. The 1954 manual also represents the shift from using mainly regulatory and warning signs on interstate highways to including guide signs. This manual also adopted the use of white letters on green background for Interstate highways.

New MUTCD Editions Signal America on the Move

Changes incorporated into the 1961 MUTCD truly supplement reflected a changing America. The text was 333 pages long and the manual had two new sections, one to address construction and maintenance operations, which complemented a major section addressing needs of the new Interstate Highway System. There was also a section included for civil defense signing.

A completely rewritten MUTCD premiered in 1971. Some of the most significant changes included adding definition of "should," "shall," and "may" requirements. Orange was designated for construction signing, yellow markings separated opposing traffic, and there was a wider use of symbol signs. School signs were also adopted.

The 1978 MUTCD contained two new parts that addressed highway-rail grade crossings and traffic control for bicycle facilities. There were also revisions addressing the fundamental safety principals concerning work zones, the need for traffic control plans, and an upgraded section on barricades and channelizing devices. New illustrations reinforced the signing and pavement marking standards.

Revise, Update, Amend

Succeeding publications of the MUTCD reflect the changing need of traffic control devices to accommodate increased traffic, higher speeds, more commercial traffic, and roads that serve travelers 24-

hours a day in all types of weather. The speed with which technology, traffic control, and traffic operations change makes the MUTCD a dynamic and constantly changing document. This makes it difficult for those who depend on the MUTCD to remain current with new and changing standards and guidance. By publishing the MUTCD on the Internet, users have greater access to the most current information.

FHWA

Exhibit 5 to MDOT's MSJ

Great Lakes Circle Tour

Overview & Introduction

The Great Lakes Circle Tours (GLCT) are a total of four routes circling each of the Great Lakes with the exception of Lake Ontario. These routes were conceived as an aid for travellers who wished to stick close to the shorelines of the lakes in their journeys as well as a vehicle for state, regional, and local tourism organizations to promote travel and activities along the shores of each lake. After the routes were established, many local and regional tourism organizations began tying their promotional activities into the Circle Tours.

The Lake Superior Circle Tour was the first route established in 1986, with Michigan following in 1987, then Huron and Erie following in the early 1990s.

In 1985, Michigan First Lady Paula Blanchard, an advisor to the Michigan Department of Commerce at the time, pitched the idea to establish a tour route around Lake Superior at a tourism conference that fall. Soon after, MDOT drafted a design for the signs and, working with the transportation departments in Wisconsin, Minnesota and Ontario, helped devise a route around the largest of the Great Lakes.

Once the Lake Superior Circle Tour signs had been erected in 1986, work began in earnest for a Lake Michigan Circle Tour, becoming a reality just one year later. Then in 1988, the Great Lakes Commission approved an overarching “Great Lakes Circle Tour” to help coordinate the various routes among the eight Great Lakes states and the province of Ontario.

The GLCT routes have generally been designated by each state or provincial transportation department or ministry along the state or provincial highway closest to the Great Lake shoreline. In a few areas, though, the Circle Tour is signed along locally maintained roadways and a few select GLCT Loops and Spurs, signed with special brown signs, have also been designated.

Since their creation, however, the Circle Tours have seen varying levels of success and waning support from the Great Lakes Commission has left their continued existence in the hands of the individual jurisdictions. Michigan, Wisconsin, Illinois, and Ohio still sign and maintain their portions of the Circle Tour routes, while signage Minnesota, Ontario and Pennsylvania is now less than complete or even missing in some areas.

Back to: The Circle Tours.

Copyright © 1997-2014 Christopher J. Bessert. All Rights Reserved. | chris.bessert@gmail.com | Last updated Thursday, May 15, 2014.

Lake Michigan Circle Tour

After Lake Superior's loosely-organized "circle route" which had been promoted by local tourist organizations since the 1960s became the first officially signed Great Lake circle tour route, the Lake Michigan Circle Tour (LMCT) was not far behind. The only single-nation Circle Tour (Lake Michigan being the only Great Lake completely within the US, of course), the LMCT also has the most mileage of any Circle Tour in the state of Michigan: 616 miles.

Working in conjunction with the Michigan Department of Transportation (MDOT), the West Michigan Tourist Association (WMTA) helped to make the first of the official Great Lakes Circle Tours a reality. On the MDOT side, Jack Morgan, assistant to the department's deputy director, introduced the concept of a Circle Tour in 1987. Just 14 months later, agreement had been reached on a route and signs to be posted along the 1,100-mile tour completely circling Lake Michigan. The WMTA filled the need for a guidebook and when the Chicago Tribune and Milwaukee Journal ran articles in 1988 about the new Circle Tour, 150 callers from the Chicagoland area along deluged the WMTA staff the next Monday morning, requesting the guide. Two days later, 700 guidebook requests came in from Illinois and Wisconsin and the following day an additional 1,000 phone and mail requests poured in to their offices.

Present-Day Concerns and the Tri-Modal Corridor

In November 2012, the inaugural meeting of the Lake Michigan Trails Conference was convened in Saugatuck by Western Michigan University professor Dave Lembeck. Lembeck is championing both the completion of a Lake Michigan "water trail" for kayakers, canoeists and other paddlers around the lake's entire shoreline as well as an interconnection between the water trail, the new U.S. Bicycle Route 35 (USBR-35) and the existing Lake Michigan Circle Tour. The envisioned "Tri-Modal Corridor" would accommodate non-motorized transportation and recreation via the "water trail" in the Lake and the bicycle route on land. The LMCT would help link the various bicycle trailheads and water access points together.

Unfortunately, actual signage along the Lake Michigan Circle Tour route has deteriorated over time. While Wisconsin has generally kept the Circle Tour reasonably well posted, signage in Michigan and Illinois is lacking and long segments of the LMCT in Indiana are now completely unsigned. Indeed, when the numbered highways that the Circle Tour ran along were rerouted in Northwest Indiana in recent years, the LMCT route markers were regrettably not relocated or replaced. Furthermore, highway signing standards may have changed to the point where including Circle Tour route markers alongside the other numbered highway markers on freeway signage is no longer allowed or encouraged. While hundreds of the standard Circle Tour markers are still found alongside the roadside in Michigan, some locations where the LMCT changes directions (e.g. transitions from one highway to another) are now under-signed or completely unsigned altogether. This was cited as a major concern by the attendees at the 2012 Lake Michigan Trails Conference.

Conference attendees vowed to support the ongoing efforts of the existing organizations assembling the resources necessary to complete the Lake Michigan Water Trail and the signed U.S. Bicycle Route network now underway around the periphery of the Lake. Additionally, attendees citied a need to renew coordination and oversight of the Great Lakes Circle Tour Program within the various state departments of transportation, the Ontario Ministry of Transportation and the *de facto* coordinating agency, the Great Lakes Commission. Several of those in attendance pledged resources and a commitment to both preserve the Circle Tour routes and look for ways to improve the coordination and signage into the future. Creating background documentation, documenting and recording the officially-adopted Circle Tour route, clarifying route signage standards and formalizing a route maintenance policy are just some of the concepts put forth in the revitalization of these important tourist routes.

Lack of Official Routing & Erroneous Information

Unfortunately, the Great Lakes Commission's own description of the LMCT is largely incorrect, both in terms of the actual route and because of numerous typos and incorrect community names. For example, as of last

check (March 2013), errors in just the "Lake Michigan Circle Tour Road Route" section of the Commission's LMCT page give the following description of the route in Lower Peninsula:

> *ROUTE: Follow I-96E to Holland; US-31N to Manistee; MI-22 to Traverse City; US-31 to Petoskey; MI-119 to the town of Cross Bridge; C66 to US-31; cross the Mackinaw Bridge (toll) into the Upper Peninsula*

The first major issue is to get to Holland from Indiana, one needs to first follow US-12 East (not listed) before transitioning onto I-94 East (not listed), then exit that route and follow BL I-94 and M-63 through St Joseph and Benton Harbor (not listed), transitioning then onto I-196/US-31 North (also not listed!) with a loop through downtown South Haven via BL I-196 (not listed), then back to I-196/US-31 North, before exiting onto US-31 North to reach Holland. On top of that, I-96 doesn't go to Holland at all!

From Holland to Petoskey the directions are somewhat better, although loops through downtown Muskegon, the downtowns of Whitehall and Motague, and through Pentwater via the respective BUS US-31 routings are omitted. However, from Petoskey, the LMCT has **never** run along M-119 and even if it did, the directions erroneously call the community of Cross **Village**, Cross ***Bridge***, instead! (It's never been called Cross *Bridge* since its was founded in 1830!) But after omitting the connection from US-31 onto I-75 once US-31, the name of one of Michigan's most famous landmarks is misspelled: the Mackina**c** Bridge! If these directions are this bad—and have been since it was first reported to the Great Lakes Commission in the late 1990s (a *decade and a half ago!)*—how trustworthy is the rest of the information!

Lake Michigan Circle Tour Route

The route of the mainline LMCT in Michigan follows signed state trunkline routes in its entirety, although in some places the nearest state highway to the Lake Michigan may be several miles away. Along with the primary Circle Tour route, several marked "Lake Michigan Circle Tour Loops" have been posted using white-on-brown signs. These loops may follow state highways or utilize city streets and county roads running closer to the shoreline. These loop routes are detailed below the mainline route below:

- The LMCT enters Michigan from Indiana on US-12 south of New Buffalo and proceeds northerly through New Buffalo to I-94.
- The route leaves US-12 and continues northerly on I-94 from Exit 4 toward St Joseph.
- At Exit 23, the route exits I-94 and continues northerly into downtown St Joseph via BL I-94.
- In St Joseph, the LMCT continues northerly on M-63 into northern Berrien Co.
- At the nothern terminus of M-63, the circle tour proceeds northerly on I-196/US-31 toward South Haven.
- The route leaves I-196/US-31 at Exit 18 and loops through South Haven using BL I-196.
- On the east side of South Haven, where BL I-196 ends at I-196/US-31 Exit 20, the route continues north into Allegan Co on I-196/US-31.
- While the LMCT remains on I-196/US-31 at Saugatuck/Douglas, a locally-designated **LMCT Harbor Tour** loop route is signed concurrently with A-2/Blue Star Hwy between Exits 36 and 41.
- The circle tour continues northerly on US-31/BL I-196 toward Holland at Exit 44 when I-196 splits off to the east.
- After splitting from I-196 south of Holland, the route continues northerly following US-31 past Holland and through Grand Haven and toward Norton Shores.
- At the jct of US-31 & I-96, the LMCT leaves US-31 and follows BUS US-31 through downtown Muskegon.
- Northeast of downtown Muskegon, the route continues northerly via M-120 to North Muskegon and northeasterly back to US-31.
- Back on US-31, the circle tour continues northerly toward Ludington, leaving US-31 twice: once to follow the route of BUS US-31 through the downtowns of Whitehall and Montague in northern Muskegon Co; and again to follow the route of BUS US-31 through downtown Pentwater in Oceana Co.
- At the end of the US-31 freeway near Ludington, the LMCT turns east following US-10/US-31 toward Scottville.
- At Ludington rather unique **LMCT Loop Route** begins, although it is currently unsigned: From US-31, the Loop route continues westerly along US-10 into downtown Ludington, then travels straight across the Lake Michgian via the *S.S. Badger* carferry!
- At Scottville, the circle tour turns northerly again to follow US-31 toward Manistee, although a locally-designated **LMCT Loop Route** formerly continued east on US-10 into downtown, then northerly via Old US-31 back to US-31 and the LMCT. (***NOTE:*** *The LMCT Loop route through Scottville was removed/decommissioned some time in late 2004 or early 2005 and* ***no longer exists.***)
- The route continues northerly from Scottville and through Manistee on US-31.
- Northeast of Manistee, the route turns northerly to follow M-22 through Onekama, Frankfort and Empire.
- Northeast of Empire, a **LMCT Loop Route** leaves M-22 to follow M-109 past Glen Haven, rejoining M-22 at Glen Arbor. (The mainline LMCT remains on M-22 between Empire and Glen Arbor.)
- From Glen Arbor, the circle tour continues northerly on M-22 through Leland to Northport. At Northport, M-22 and the LMCT turn nearly 180 degrees to head southerly into Traverse City.

- At Traverse City, the LMCT returns to US-31 and continues northerly via US-31 through Elk Rapids, Charlevoix and Petoskey and on toward the Mackinac Bridge.
- South of Mackinaw City, where US-31 ends, the route continues northerly on I-75 crossing the Mackinac Bridge and entering the Upper Peninsula at St Ignace. Between Mackinaw City and St Ignace, the LMCT is jointed by the Lake Huron Circle Tour.
- In St Ignace, the LMCT continues westerly along US-2 for more than 140 miles through Manistique and Gladstone to Escanaba.
- At Escanaba, the circle tour continues southwesterly via M-35 along the Green Bay shoreline to Menominee
- The route continues south on US-41 through Menominee and enters Wisconsin at Marinette.
- Continue on the **Lake Michigan Circle Tour route** into Wisconsin at the Wisconsin Highways website.

Note: The "Circle Tour Road Route" description from the GLIN website is not only vague, but incorrect! While a good alternate route, the LMCT does **not** use M-119 and C-66 through Harbor Springs and Cross Village, I-94 does not go to Holland, what is called "Cross Bridge" is actually "Cross **Village**"... and, for Pete's sake, it's the *Mackinac* Bridge (not "Mackinaw Bridge!"). The route included on this website has been personally researched by the website author in the field.

Lake Michigan Circle Tour Loop Routes

Lake Michigan Circle Tour - Harbor Tour (Saugatuck/Douglas)

A locally-designated loop route which helps circle tour motorists navigate into and through the off-route communities of Saugatuck and Douglas in northwestern Allegan Co. While most local loops are designated as "Loop Routes" off the mainline circle tour, this particular route is actually designated as a "Harbor Tour," although it behaves like any other Loop Route. Also, as with all Loop Routes, this route is designated with white-on-brown circle tour signs, using the same LMCT "logo." The route is 7.7 miles long:

- The LMCT Harbor Tour begins at I-196/US-31/LMCT at Exit 34 near Ganges (south of Douglas).
- The Harbor Tour route proceeds easterly from the freeway along M-89/124th Ave to A-2/Blue Star Hwy.
- The route turns northerly on A-2/Blue Star Hwy into Douglas, passing just west of the downtown area.
- The loop route then crosses into Saugatuck, still via A-2/Blue Star Hwy, passing just east of the downtown.
- The route ends when it meets back up with I-196/US-31/LMCT at Exit 41 northeast of Saugatuck.

Lake Michigan Circle Tour - Loop Route (*S.S. Badger* carferry)

While most Lake Michigan Circle Tour spur and loop routes simply involve an alternate highway routing diverging from the mainline route, this particular spur route is unique among them. On August 29, 1998, Lake Michigan Carferry's *S.S. Badger* which ferries automobiles, trucks and passengers between Manitowoc, Wisconsin and Ludington, Michigan was officially designated as a Lake Michigan Circle Tour spur route. The route traverses the following path:

- From the mainline Lake Michigan Circle Tour route at the western jct US-10 & US-31, the route heads westerly along US-10 into downtown Ludington, turning southerly via US-10/James St to the *S.S. Badger* carferry docks.
- The route then traverses Lake Michigan itself via the *S.S. Badger* carferry.
- From the carferry dock in Manitowoc, Wisconsin, the Loop route, following US-10, heads southerly via Lakeview Dr, westerly via Madison St and then northerly along 8th St (with eastbound US-10/LMCT Loop using 10th St) into downtown Manitowoc.
- The LMCT Loop Route ends at jct US-10 & US-151 in downtown Manitowoc.

Former Lake Michigan Circle Tour - Loop Route (Scottville)

When MDOT completed a western bypass of Scottville, taking the high volume of US-31 traffic out of town, a locally-designated LMCT Loop Route was signed, acting as a de-facto Business Routing for US-31. **Note, however, this LMCT Loop route was removed some time in late 2004 or early 2005 and no longer exists.** The former route was 1.5 miles long:

- The LMCT Loop Route began at the jct of US-10 & US-31 on the west side of Scottville.
- The route continued easterly via US-10 into downtown Scottville.
- In downtown Scottville, the loop route turned northerly and followed Old US-31 out of Scottville.

- The LMCT Loop Route ended at US-31 north of Scottville.

Lake Michigan Circle Tour - Loop Route (Glen Haven)

While the Lake Michigan Circle Tour generally follows the closest posted state trunkline to its namesake body of water, the Sleeping Bear Dunes area is one exception. Instead of diverting the mainline LMCT off M-22 for only eight miles, it continues via M-22 through to Glen Arbor and on to Leland. However, as M-109 loops off M-22 to the west (lakeside) through the Sleeping Bear Dunes area, it has been designated as a LMCT Loop Route. The route is 6.8 miles long:

- The LMCT Loop Route begins at the southern jct of M-22 & M-109 just northeast of Empire and continues northerly toward Glen Haven.
- At Glen Haven, the loop route turns east and continues on M-109 toward Glen Arbor.
- The LMCT Loop Route ends at the northern jct of M-22 & M-109 in Glen Arbor.

Back to: Great Lakes Circle Tour page.

Additional Information

- **Great Lakes Circle Tour** - new website from the author of MichiganHighways.org.
- **Lake Michigan Circle Tour History** - from the West Michigan Tourist Association (WMTA). The WMTA helped to coordinate the first of the Great Lakes Circle Tours in the 1980s.
- **Great Lakes Circle Tour** - information from the Great Lakes Commission. It was the GLC who originally established the Great Lakes Circle Tours and continues to provide information on many aspects of the Great Lakes region.
- **Lake Michigan Circle Tour** - from the Great Lakes Information Network (GLIN), which "is a partnership that provides one place online for people to find information relating to the binational Great Lakes-St. Lawrence region of North America." Please note that the "Circle Tour Road Route" description from the GLIN site is not only vague, but incorrect! (See description above.)
- **Shoreline Charms** (via archive.org)- an article by Donna Marchetti about the Lake Michigan Circle Tour from the *Michigan Living* magazine published by AAA Michigan.

Copyright © 1997-2015 Christopher J. Bessert. All Rights Reserved. | chris.bessert@gmail.com | Last updated Saturday, July 18, 2015.

Exhibit 6 to MDOT's MSJ

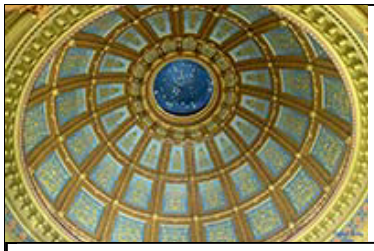

MICHIGAN LEGISLATURE

Michigan Compiled Laws Complete Through PA 130 of 2015

Section 247.951

friendly link Printer Friendly

MICHIGAN HERITAGE ROUTES (EXCERPT)
Act 69 of 1993

247.951 Definitions.

Sec. 1.

As used in this act:

(a) "Commission" means the state transportation commission.

(b) "Department" means the state transportation department.

(c) "Historic" means buildings, structures, interpreted sites, objects, or historic districts that are significant to the history, archaeology, architecture, engineering, or culture of this state.

(d) "Pure Michigan byway" means a state highway that is designated in the manner provided in this act as a scenic, recreational, or historic route that is representative of Michigan's natural and cultural heritage.

(e) "Recreational" means facilities normally associated with leisure-time activities, including, but not limited to, parks, public access sites, wildlife refuges, forest areas, marinas, swimming areas, hiking trails, and sightseeing areas.

(f) "Scenic" means an area of outstanding natural beauty whose features include, but are not limited to, significant natural features such as vegetation, land form, water, and open areas with exceptional vistas and views, that singly or in combination make that area unique and distinct in character.

(g) "State trunk line highway system" means the system described in section 1 of 1951 PA 51, MCL 247.651.

History: 1993, Act 69, Imd. Eff. June 22, 1993 ;-- Am. 2014, Act 445, Imd. Eff. Dec. 30, 2014

© 2009 Legislative Council, State of Michigan

Syndication

Bills
Meetings
Laws

Recently Viewed

mcl 247 951
mcl Act 69 of 1993

Acceptable Use Policy **Privacy Policy** **Copyright Infringement** **Comment Form**

The Michigan Legislature Website is a free service of the Legislative Service Bureau in cooperation with the Michigan Legislative Council, the Michigan House of Representatives, and the Michigan Senate. The information obtained from this site is not intended to replace official versions of that information and is subject to revision. The Legislature presents this information, without warranties, express or implied, regarding the accuracy of the information, timeliness, or completeness. If you believe the information is inaccurate, out-of-date, or incomplete or if you have problems accessing or reading the information, please send your concerns to the appropriate agency using the online Comment Form in the bar above this text.

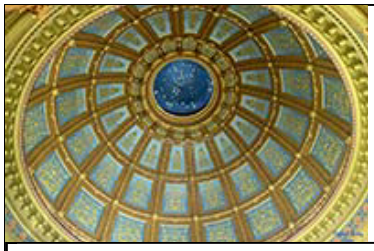

MICHIGAN LEGISLATURE

Michigan Compiled Laws Complete Through PA 130 of 2015

Section 247.952

friendly link Printer Friendly

MICHIGAN HERITAGE ROUTES (EXCERPT)
Act 69 of 1993

247.952 Intent of the legislature.

Sec. 2.

It is the intent of the legislature to establish this state's responsibility for the enhancement and enjoyment of Michigan's scenic, recreational, and historic resources along its roadside by identifying and designating certain portions of the state trunk line highway system as Pure Michigan byways. It is further the intent of the legislature in designating Pure Michigan byways to assign responsibility for the development of the byways and for the establishment and application of specific planning and design criteria and procedures appropriate to the byways. The legislature further intends to provide criteria for the location and length of Pure Michigan byways and adjacent areas requiring continuing and careful coordination of planning, design, construction, maintenance, land use, and development, by state and local agencies as appropriate, to encourage adjacent land use consistent with the intent of the designation.

History: 1993, Act 69, Imd. Eff. June 22, 1993 ;-- Am. 2014, Act 445, Imd. Eff. Dec. 30, 2014

© 2009 Legislative Council, State of Michigan

Legislature

Bills
Appropriation Bills
Calendars
Committees
Committee Bill Records
Committee Meetings
Concurrent Resolutions
Initiatives
Joint Resolutions
Journals
Legislators
Public Act (Signed Bills)
Resolutions
Rules
Session Schedules
Search - Basic
Search - Advanced

Laws

Often Req Laws
Req Outdated Acts
Basic MCL Search
Advanced MCL Search
Public Act MCL Search
Michigan Constitution
Chapter Index
Executive Orders
Executive Reorgs
Historical Documents
MCL Tables

More

Archives
Michigan Manuals
Michigan Color Themes
Publications
Related Sites

Syndication

Bills
Meetings
Laws

Recently Viewed

mcl 247 952
mcl 247 953
mcl 247 952
mcl 247 951
mcl Act 69 of 1993

Acceptable Use Policy **Privacy Policy** **Copyright Infringement** **Comment Form**

The Michigan Legislature Website is a free service of the Legislative Service Bureau in cooperation with the Michigan Legislative Council, the Michigan House of Representatives, and the Michigan Senate. The information obtained from this site is not intended to replace official versions of that information and is subject to revision. The Legislature presents this information, without warranties, express or implied, regarding the accuracy of the information, timeliness, or completeness. If you believe the information is inaccurate, out-of-date, or incomplete or if you have problems accessing or reading the information, please send your concerns to the appropriate agency using the online Comment Form in the bar above this text.

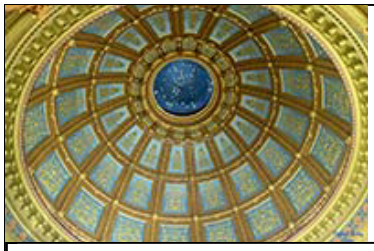

MICHIGAN LEGISLATURE

Michigan Compiled Laws Complete Through PA 130 of 2015

Section 247.953

friendly link Printer Friendly

MICHIGAN HERITAGE ROUTES (EXCERPT)
Act 69 of 1993

247.953 Heritage routes; characteristics.

Sec. 3.

Certain portions of the state trunkline highway system are so uniquely endowed by natural aesthetic, ecological, environmental, and cultural amenities immediately adjacent to the roadside that their use by a larger percentage of the motoring public, particularly during the recreational season, is for the experience of traveling the road rather than as a route to a destination. Because of the immediate proximity of these features, roads may possess characteristics such as the following: pavement width of 16 to 20 feet, shoulders as narrow as 2 feet with trees immediately adjacent, curves that restrict maximum legal speeds, hills, steep side slopes, and narrow rights-of-way. The improvement philosophy for these roads is to maintain the essential elements of the road and the area immediately surrounding the road that create its unique character.

History: 1993, Act 69, Imd. Eff. June 22, 1993

© 2009 Legislative Council, State of Michigan

Syndication

Bills
Meetings
Laws

Recently Viewed

mcl 247 953
mcl 247 952
mcl 247 953
mcl 247 952
mcl 247 951
mcl Act 69 of 1993

Acceptable Use Policy **Privacy Policy** **Copyright Infringement** **Comment Form**

The Michigan Legislature Website is a free service of the Legislative Service Bureau in cooperation with the Michigan Legislative Council, the Michigan House of Representatives, and the Michigan Senate. The information obtained from this site is not intended to replace official versions of that information and is subject to revision. The Legislature presents this information, without warranties, express or implied, regarding the accuracy of the information, timeliness, or completeness. If you believe the information is inaccurate, out-of-date, or incomplete or if you have problems accessing or reading the information, please send your concerns to the appropriate agency using the online Comment Form in the bar above this text.

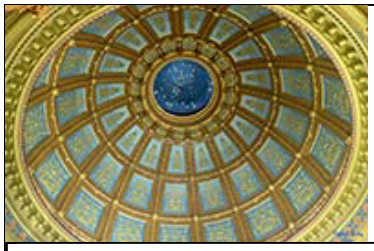

MICHIGAN LEGISLATURE

Michigan Compiled Laws Complete Through PA 130 of 2015

Section 247.957a

friendly link Printer Friendly

MICHIGAN HERITAGE ROUTES (EXCERPT)
Act 69 of 1993

247.957a Designation of routes as Pure Michigan byways.

Sec. 7a.

No later than 1 year after the date the amendatory act that added this section is enacted into law, the department shall designate as Pure Michigan byways all routes that are designated as Michigan heritage routes on the date the amendatory act that added this section is enacted into law, if the department obtains a trademark license from the Michigan economic development corporation for the use of the words "Pure Michigan".

History: Add. 2014, Act 445, Imd. Eff. Dec. 30, 2014

© 2009 Legislative Council, State of Michigan

Syndication

Bills
Meetings
Laws

Recently Viewed

mcl 247 957a
mcl 247 957
mcl 247 956
mcl 247 954
mcl 247 953
mcl 247 952

Acceptable Use Policy **Privacy Policy** **Copyright Infringement** **Comment Form**

The Michigan Legislature Website is a free service of the Legislative Service Bureau in cooperation with the Michigan Legislative Council, the Michigan House of Representatives, and the Michigan Senate. The information obtained from this site is not intended to replace official versions of that information and is subject to revision. The Legislature presents this information, without warranties, express or implied, regarding the accuracy of the information, timeliness, or completeness. If you believe the information is inaccurate, out-of-date, or incomplete or if you have problems accessing or reading the information, please send your concerns to the appropriate agency using the online Comment Form in the bar above this text.

Exhibit 7 to MDOT's MSJ

TRANSPORTATION
COMMISSION
BARTON W. LaBELLE - Chairman
JACK L. GINGRASS - Vice Chairman
BETTY JEAN AWREY
TED B. WAHBY
LOWELL B. JACKSON
JOHN W. GARSIDE
LH-LAN-0 (01/01)

STATE OF MICHIGAN

JOHN ENGLER, GOVERNOR

DEPARTMENT OF TRANSPORTATION

MURRAY D. VAN WAGONER (TRANSPORTATION) BUILDING
425 WEST OTTAWA STREET - PO BOX 30050, LANSING, MICHIGAN 48909
PHONE: 517-373-2090 FAX: 517-373-0167 WEB SITE: http//www.mdot.state.mi.us
GREGORY J. ROSINE, DIRECTOR

May 18, 2001

Ms. Joan Woods, Chairperson
M-22 Scenic Heritage Route Committee
1996 S. Manitou Trail
Leland, Michigan 49654

Dear Ms. Woods:

It is my pleasure to inform you that the M-22 Heritage Route application and nomination process has been successfully completed and that M-22 through Leelanau County, except in Bingham Township, is now designated as a Michigan Scenic Heritage Route.

Designation as a Michigan Scenic Heritage Route signifies that those living and working within the corridor have made a commitment to conserving, enhancing and promoting their area as a unique living and working community.

The M-22 corridor in Leelanau County contains a distinctive blend of scenic, cultural and natural features that make it a worthy addition to the Michigan Scenic Heritage Route system.

As a partner in the M-22 Scenic Heritage Route, I pledge my personal support, and assure you that the Michigan Department of Transportation will continue to endorse this worthwhile accomplishment.

If you have questions or comments, please do not hesitate to call me at (517) 335-2934.

Sincerely,

Pete Hanses
Heritage Route Manager

PRINTED ON RECYCLED PAPER

Exhibit 8 to MDOT's MSJ

Manual on Uniform Traffic Control Devices

for Streets and Highways

2003 EDITION

U.S. Department of Transportation
Federal Highway Administration

Dotted line indicates
edge of binder spine.

Manual on Uniform Traffic Control Devices

for Streets and Highways

MUTCD

2003 EDITION

U.S. Department of Transportation
Federal Highway Administration

Manual on Uniform Traffic Control Devices

for Streets and Highways

2003 EDITION

U.S. Department of Transportation
Federal Highway Administration

The Manual on Uniform Traffic Control Devices (MUTCD) is approved by the Federal Highway Administrator as the National Standard in accordance with Title 23 U.S. Code, Sections 109(d), 114(a), 217, 315, and 402(a), 23 CFR 655, and 49 CFR 1.48(b)(8), 1.48(b)(33), and 1.48(c)(2).

Addresses for Publications Referenced in the MUTCD

American Association of State Highway and Transportation Officials (AASHTO)
444 North Capitol Street, NW, Suite 249
Washington, DC 20001
www.transportation.org

American Railway Engineering and Maintenance-of-Way Association (AREMA)
8201 Corporate Drive, Suite 1125
Landover, MD 20785-2230
www.arema.org

Federal Highway Administration Report Center
Facsimile number: 301.577.1421
report.center@fhwa.dot.gov

Illuminating Engineering Society (IES)
120 Wall Street, Floor 17
New York, NY 10005
www.iesna.org

Institute of Makers of Explosives
1120 19th Street, NW, Suite 310
Washington, DC 20036-3605
www.ime.org

Institute of Transportation Engineers (ITE)
1099 14th Street, NW, Suite 300 West
Washington, DC 20005-3438
www.ite.org

International Organization for Standards
c/o Mr. Gerard Kuso
Austrian Standards Institute
Heinestrabe 38
Postfach 130
A-1021
Wien, Austria
www.iso.ch

ISEA - The Safety Equipment Association
1901 North Moore Street, Suite 808
Arlington, VA 22209
www.safetyequipment.org

National Committee on Uniform Traffic Laws and Ordinances (NCUTLO)
107 South West Street, Suite 110
Alexandria, VA 22314
www.ncutlo.org

Occupational Safety and Health Administration (OSHA)
U.S. Department of Labor
200 Constitution Avenue, NW
Washington, DC 20210
www.osha.gov

Transportation Research Board (TRB)
The National Academies
2101 Constitution Avenue, NW
Washington, DC 20418
www.nas.edu/trb

U.S. Architectural and Transportation Barriers Compliance Board (The U.S. Access Board)
1331 F Street, NW, Suite 1000
Washington, DC 20004-1111
www.access-board.gov

Acknowledgments

The Federal Highway Administration gratefully acknowledges the valuable assistance that it received from the National Committee on Uniform Traffic Control Devices and its over 200 voluntary members in the development of this Manual.

MANUAL ON UNIFORM TRAFFIC CONTROL DEVICES
INTRODUCTION

Standard:

Traffic control devices shall be defined as all signs, signals, markings, and other devices used to regulate, warn, or guide traffic, placed on, over, or adjacent to a street, highway, pedestrian facility, or bikeway by authority of a public agency having jurisdiction.

The Manual on Uniform Traffic Control Devices (MUTCD) is incorporated by reference in 23 Code of Federal Regulations (CFR), Part 655, Subpart F and shall be recognized as the national standard for all traffic control devices installed on any street, highway, or bicycle trail open to public travel in accordance with 23 U.S.C. 109(d) and 402(a). The policies and procedures of the Federal Highway Administration (FHWA) to obtain basic uniformity of traffic control devices shall be as described in 23 CFR 655, Subpart F.

Any traffic control device design or application provision contained in this Manual shall be considered to be in the public domain. Traffic control devices contained in this Manual shall not be protected by a patent, trademark, or copyright, except for the Interstate Shield and any other items owned by FHWA.

Support:

The need for uniform standards was recognized long ago. The American Association of State Highway Officials (AASHO), now known as the American Association of State Highway and Transportation Officials (AASHTO), published a manual for rural highways in 1927, and the National Conference on Street and Highway Safety (NCSHS) published a manual for urban streets in 1930. In the early years, the necessity for unification of the standards applicable to the different classes of road and street systems was obvious. To meet this need, a joint committee of AASHO and NCSHS developed and published the original edition of this Manual on Uniform Traffic Control Devices (MUTCD) in 1935. That committee, now called the National Committee on Uniform Traffic Control Devices (NCUTCD), though changed from time to time in name, organization, and personnel, has been in continuous existence and has contributed to periodic revisions of this Manual. The FHWA has administered the MUTCD since the 1971 edition. The FHWA and its predecessor organizations have participated in the development and publishing of the previous editions. There were eight previous editions of the MUTCD, and several of those editions were revised one or more times. Table I-1 traces the evolution of the MUTCD, including the two manuals developed by AASHO and NCSHS.

Standard:

The U.S. Secretary of Transportation, under authority granted by the Highway Safety Act of 1966, decreed that traffic control devices on all streets and highways open to public travel in accordance with 23 U.S.C. 109(d) and 402(a) in each State shall be in substantial conformance with the Standards issued or endorsed by the FHWA.

Support:

23 CFR 655.603 adopts the MUTCD as the national standard for any street, highway, or bicycle trail open to public travel in accordance with 23 U.S.C. 109(d) and 402(a). The "Uniform Vehicle Code (UVC)" is one of the publications referenced in the MUTCD. The UVC contains a model set of motor vehicle codes and traffic laws for use throughout the United States. The States are encouraged to adopt Section 15-116 of the UVC, which states that, "No person shall install or maintain in any area of private property used by the public any sign, signal, marking, or other device intended to regulate, warn, or guide traffic unless it conforms with the State manual and specifications adopted under Section 15-104."

The Standard, Guidance, Option, and Support material described in this edition of the MUTCD provide the transportation professional with the information needed to make appropriate decisions regarding the use of traffic control devices on streets and highways. The material in this edition is organized to better differentiate between Standards that must be satisfied for the particular circumstances of a situation, Guidances that should be followed for the particular circumstances of a situation, and Options that may be applicable for the particular circumstances of a situation.

Throughout this Manual the headings Standard, Guidance, Option, and Support are used to classify the nature of the text that follows. Figures, tables, and illustrations supplement the text and might constitute a Standard, Guidance, Option, or Support. The user needs to refer to the appropriate text to classify the nature of the figure, table, or illustration.

Standard:

When used in this Manual, the text headings shall be defined as follows:

1. **Standard—a statement of required, mandatory, or specifically prohibitive practice regarding a traffic control device. All standards are labeled, and the text appears in bold type. The verb shall is typically used. Standards are sometimes modified by Options.**

Table I-1. Evolution of the MUTCD

Year	Name	Month / Year Revised
1927	Manual and Specifications for the Manufacture, Display, and Erection of U.S. Standard Road Markers and Signs (for rural roads)	4/29, 12/31
1930	Manual on Street Traffic Signs, Signals, and Markings (for urban streets)	No revisions
1935	Manual on Uniform Traffic Control Devices for Streets and Highways (MUTCD)	2/39
1942	Manual on Uniform Traffic Control Devices for Streets and Highways — War Emergency Edition	No revisions
1948	Manual on Uniform Traffic Control Devices for Streets and Highways	9/54
1961	Manual on Uniform Traffic Control Devices for Streets and Highways	No revisions
1971	Manual on Uniform Traffic Control Devices for Streets and Highways	11/71, 4/72, 3/73, 10/73, 6/74, 6/75, 9/76, 12/77
1978	Manual on Uniform Traffic Control Devices for Streets and Highways	12/79, 12/83, 9/84, 3/86
1988	Manual on Uniform Traffic Control Devices for Streets and Highways	1/90, 3/92, 9/93, 11/94, 12/96, 6/98, 1/00
2000	Manual on Uniform Traffic Control Devices for Streets and Highways — Millennium Edition	7/02
2003	Manual on Uniform Traffic Control Devices for Streets and Highways	

2. **Guidance—a statement of recommended, but not mandatory, practice in typical situations, with deviations allowed if engineering judgment or engineering study indicates the deviation to be appropriate. All Guidance statements are labeled, and the text appears in unbold type. The verb should is typically used. Guidance statements are sometimes modified by Options.**
3. **Option—a statement of practice that is a permissive condition and carries no requirement or recommendation. Options may contain allowable modifications to a Standard or Guidance. All Option statements are labeled, and the text appears in unbold type. The verb may is typically used.**
4. **Support—an informational statement that does not convey any degree of mandate, recommendation, authorization, prohibition, or enforceable condition. Support statements are labeled, and the text appears in unbold type. The verbs shall, should, and may are not used in Support statements.**

Support:

Throughout this Manual all dimensions and distances are provided in the International System of Units, a modernized version of the Metric system, and their English equivalent units are shown in parentheses.

Guidance:

Before laying out distances or determining sign sizes, the public agency should decide whether to use the International System of Units (Metric) or the English equivalent units. The chosen units should be specified on plan drawings. The chosen unit of measurement should be made known to those responsible for designing, installing, or maintaining traffic control devices.

Except when a specific numeral is required by the text of a Section of this Manual, numerals shown on the sign images in the figures that specify quantities such as times, distances, speed limits, and weights should be regarded as examples only. When installing any of these signs, the numerals should be appropriately altered to fit the specific signing situation.

Support:

The following information will be useful when reference is being made to a specific portion of text in this Manual.

There are ten Parts in this Manual and each Part is comprised of one or more Chapters. Each Chapter is comprised of one or more Sections. Parts are given a numerical identification, such as Part 2-Signs. Chapters are identified by the Part number and a letter, such as Chapter 2B-Regulatory Signs. Sections are identified by the Chapter number and letter followed by a decimal point and a number, such as Section 2B.03-Size of Regulatory Signs.

Each Section is comprised of one or more paragraphs. The paragraphs are indented but are not identified by a number or letter. Paragraphs are counted from the beginning of each Section without regard to the intervening text headings (Standard, Guidance, Option, or Support). Some paragraphs have lettered or numbered items. As an example of how to cite this Manual, the phrase "Not less than 12 m (40 ft) beyond the stop line" that appears on Page 4D-12 of this Manual would be referenced in writing as "Section 4D.15, P7, D1(a)," and would be verbally referenced as "Item D1(a) of Paragraph 7 of Section 4D.15."

Standard:

In accordance with 23 CFR 655.603(b)(1), States or other Federal agencies that have their own MUTCDs or Supplements shall revise these MUTCDs or Supplements to be in substantial conformance with changes to the National MUTCD within 2 years of issuance of the changes. Unless a particular device is no longer serviceable, non-compliant devices on existing highways and bikeways shall be brought into compliance with the current edition of the National MUTCD as part of the systematic upgrading of substandard traffic control devices (and installation of new required traffic control devices) required pursuant to the Highway Safety Program, 23 U.S.C. § 402(a). In cases involving Federal-aid projects for new highway or bikeway construction or reconstruction, the traffic control devices installed (temporary or permanent) shall be in conformance with the most recent edition of the National MUTCD before that highway is opened or re-opened to the public for unrestricted travel [23 CFR 655.603(d)(2)]. The FHWA has the authority to establish other target compliance dates for implementation of particular changes to the MUTCD [23 CFR 655.603(d)(4)]. These target compliance dates established by the FHWA shall be as follows:

Section 2A.19 Lateral Offset—crashworthiness of sign supports—January 17, 2013 for roads with posted speed limit of 80 km/h (50 mph) or higher.

Section 2B.03 Size of Regulatory Signs—increased sign sizes and other changes to Table 2B-1—10 years from the effective date of the Final Rule for the 2003 MUTCD.

Section 2B.04 STOP Sign (R1-1)—4-WAY plaque requirement—January 17, 2004.

Section 2B.06 STOP Sign Placement—signs mounted on back of STOP sign—10 years from the effective date of the Final Rule for the 2003 MUTCD.

Section 2B.09 YIELD Sign Applications—changes in YIELD sign application criteria from the 1988 MUTCD—January 17, 2011.

Section 2B.10 YIELD Sign Placement—signs mounted on back of YIELD sign—10 years from the effective date of the Final Rule for the 2003 MUTCD.

Section 2B.11 Yield Here to Pedestrians Signs (R1-5, R1-5a)—new section—10 years from the effective date of the Final Rule for the 2003 MUTCD.

Section 2B.13 Speed Limit Sign (R2-1)—color of changeable message legend of YOUR SPEED—10 years from the effective date of the Final Rule for the 2003 MUTCD.

Section 2B.25 Reversible Lane Control Signs (R3-9d, R3-9f through R3-9i)—removal of R3-9c and R3-9e signs—10 years from the effective date of the Final Rule for the 2003 MUTCD.

Section 2B.26 Preferential Only Lane Signs (R3-10 through R3-15)—10 years from the effective date of the Final Rule for the 2003 MUTCD.

Section 2B.27 Preferential Only Lanes for High-Occupancy Vehicles (HOVs)—new section in Millennium Edition—January 17, 2007.

Section 2B.28 Preferential Only Lane Sign Applications and Placement—10 years from the effective date of the Final Rule for the 2003 MUTCD.

Section 2B.37 ONE WAY Signs (R6-1, R6-2)—placement requirement at intersecting alleys—January 17, 2008.

Section 2B.46 Photo Enforced Signs (R10-18, R10-19)—new section—10 years from the effective date of the Final Rule for the 2003 MUTCD.

Section 2B.52 Hazardous Material Signs (R14-2, R14-3)—change in sign legend—10 years from the effective date of the Final Rule for the 2003 MUTCD.

Section 2C.04 Size of Warning Signs—increased sizes of W4-1, W5-2, W6-3, and W12-1 signs—January 17, 2008.

Section 2C.04 Size of Warning Signs—sizes of W1 Series Arrows signs, W7 Series truck runaway signs, W12-2p low clearance signs, and W10-1 advance grade crossing sign—10 years from the effective date of the Final Rule for the 2003 MUTCD.

Section 2C.11 Truck Rollover Warning Signs (W1-13, W1-13a)—new section—10 years from the effective date of the Final Rule for the 2003 MUTCD.

Section 2C.16 NARROW BRIDGE Sign (W5-2)—elimination of symbol sign—10 years from the effective date of the Final Rule for the 2003 MUTCD.

Section 2C.25 PAVEMENT ENDS Sign (W8-3)—removal of symbol sign—January 17, 2011.

Section 2C.26 Shoulder Signs (W8-4, W8-9, and W8-9a)—removal of symbol signs—January 17, 2011.

Section 2C.30 Speed Reduction Signs (W3-5, W3-5a)—removal of R2-5 Series Reduced Speed Ahead signs and use of W3-5 or W3-5a warning signs instead—15 years from the effective date of the Final Rule for the 2003 MUTCD.

Section 2C.31 Merge Signs (W4-1, W4-5)—Entering Roadway Merge sign (W4-1a)—10 years from the effective date of the Final Rule for the 2003 MUTCD.

Section 2C.32 Added Lane Signs (W4-3, W4-6)—Entering Roadway Added Lane sign (W4-3a)—10 years from the effective date of the Final Rule for the 2003 MUTCD.

Section 2C.33 Lane Ends Signs (W4-2, W9-1, W9-2)—new design of W4-2 sign—10 years from the effective date of the Final Rule for the 2003 MUTCD.

Section 2C.34 Two-Way Traffic Sign (W6-3)—transition from one-way street—5 years from the effective date of the Final Rule for the 2003 MUTCD.

Section 2C.37 Intersection Warning Signs (W2-1 through W2-6)—new design of Circular Intersection (W2-6) sign—10 years from the effective date of the Final Rule for the 2003 MUTCD.

Section 2C.40 Vehicular Traffic Signs (W8-6, W11-1, W11-5, W11-5a, W11-6, W11-8, W11-10, W11-11, W11-12, W11-14)—new symbol signs W11-1, W11-5, W11-5a, W11-6, W11-11, and W11-14—10 years from the effective date of the Final Rule for the 2003 MUTCD.

Section 2C.41 Nonvehicular Signs (W11-2, W11-3, W11-4, W11-7, W11-9)—elimination of crosswalk lines from crossing signs and use of diagonal downward pointing arrow supplemental plaque (W16-7) if at the crossing—January 17, 2011.

Section 2C.53 PHOTO ENFORCED Plaque (W16-10)—new section—10 years from the effective date of the Final Rule for the 2003 MUTCD.

Section 2D.38 Street Name Sign (D3-1)—symbol sizes, 150 mm (6 in) letter sizes for lettering on ground-mounted Street Name signs on roads that are not multi-lane streets with speed limits greater than 60 km/h (40 mph), other new provisions of Millennium Edition—January 9, 2012.

Section 2D.38 Street Name Sign (D3-1)—letter sizes on ground-mounted signs on multi-lane streets with speed limits greater than 60 km/h (40 mph) and letter sizes on overhead-mounted signs—15 years from the effective date of the Final Rule of the 2003 MUTCD.

Section 2D.39 Advance Street Name Signs (D3-2)—new section in 2000 MUTCD and revisions in 2003 MUTCD—15 years from the effective date of the Final Rule for the 2003 MUTCD.

Section 2D.45 General Service Signs (D9 Series)—Traveler Info Call 511 (D12-5) sign, Channel 9 Monitored (D12-3) sign—10 years from the effective date of the Final Rule for the 2003 MUTCD.

Section 2D.46 Reference Location Signs (D10-1 through D10-3) and Intermediate Reference Location Signs (D10-1a through D10-3a)—location and spacing of Reference Location signs and design of Intermediate Reference Location signs—10 years from the effective date of the Final Rule for the 2003 MUTCD.

Section 2E.28 Interchange Exit Numbering—size of exit number plaque—January 17, 2008.

Section 2E.28 Interchange Exit Numbering—LEFT on exit number plaques for left exits—5 years from the effective date of the Final Rule for the 2003 MUTCD.

Section 2E.30 Advance Guide Signs—advance placement distance—January 17, 2008.

Section 2E.54 Reference Location Signs and Enhanced Reference Location Signs (D10-4, D10-5)—design of Enhanced Reference Location signs and Intermediate Enhanced Reference Location signs—10 years from the effective date of the Final Rule for the 2003 MUTCD.

Section 2E.59 Preferential Only Lane Signs—new section in 2003 Edition—10 years from the effective date of the Final Rule for the 2003 MUTCD.

Section 2F.05 Size of Lettering—minimum height of letters and numerals on specific service signs—January 17, 2011.

Section 2I.03 EVACUATION ROUTE Sign (EM-1)—new design and size of EM-1 sign—15 years from the effective date of the Final Rule for the 2003 MUTCD.

Section 3B.01 Yellow Centerline Pavement Markings and Warrants—new section in Millennium Edition—January 3, 2003.

Section 3B.03 Other Yellow Longitudinal Pavement Markings—spacing requirements for pavement marking arrows in two-way left-turn lanes—5 years from the effective date of the Final Rule for the 2003 MUTCD.

Section 3B.07 Warrants for Use of Edge Lines—new section in Millennium Edition—January 3, 2003.

Section 3B.17 Crosswalk Markings—gap between transverse lines of a crosswalk—10 years from the effective date of the Final Rule for the 2003 MUTCD.

Section 3B.19 Pavement Word and Symbol Markings—typical spacing of lane-use arrows in two-way left-turn lanes shown in Figure 3B-7—5 years from the effective date of the Final Rule for the 2003 MUTCD.

Section 3C.01 Object Marker Design and Placement Height—width of stripes on Type 3 striped marker—10 years from the effective date of the Final Rule for the 2003 MUTCD.

Section 4D.01 General—location of signalized midblock crosswalks—10 years from the effective date of the Final Rule for the 2003 MUTCD.

Section 4D.05 Application of Steady Signal Indications—Item B.4 in STANDARD—5 years from the effective date of the Final Rule for the 2003 MUTCD.

Section 4D.12 Flashing Operation of Traffic Control Signals—duration of steady red clearance interval in change from red-red flashing mode to steady (stop-and-go) mode—10 years from the effective date of the Final Rule for the 2003 MUTCD.

Section 4E.06 Accessible Pedestrian Signals—new section in Millennium Edition—January 17, 2005.

Section 4E.07 Countdown Pedestrian Signals—new section—10 years from the effective date of the Final Rule for the 2003 MUTCD for countdown pedestrian signal hardware; 3 years from the effective date of the Final Rule for the 2003 MUTCD for operational requirements of countdown pedestrian signals.

Section 4E.09 Accessible Pedestrian Signal Detectors—new section in Millennium Edition—January 17, 2005.

Section 4E.10 Pedestrian Intervals and Signal Phases—pedestrian clearance time sufficient to travel to far side of the traveled way—5 years from the effective date of the Final Rule for the 2003 MUTCD.

Section 5C.05 NARROW BRIDGE Sign (W5-2)—elimination of symbol sign—10 years from the effective date of the Final Rule for the 2003 MUTCD.

Section 6D.01 Pedestrian Considerations—all new provisions for pedestrian accessibility—5 years from the effective date of the Final Rule for the 2003 MUTCD.

Section 6D.02 Accessibility Considerations—5 years from the effective date of the Final Rule for the MUTCD.

Section 6D.03 Worker Safety Considerations—high-visibility apparel requirements—3 years from the effective date of the Final Rule for the 2003 MUTCD.

Section 6E.02 High-Visibility Safety Apparel—high-visibility apparel requirements for flaggers—3 years from the effective date of the Final Rule for the 2003 MUTCD.

Section 6F.03 Sign Placement—crashworthiness of sign supports—January 17, 2005.

Section 6F.58 Channelizing Devices—crashworthiness—January 17, 2005.

Section 6F.59 Cones—width of retroreflective stripes—5 years from the effective date of the Final Rule for the 2003 MUTCD.

Section 6F.63 Type I, II, or III Barricades—crashworthiness—January 17, 2005.

Section 6F.66 Longitudinal Channelizing Barricades—crashworthiness—January 17, 2005.

Section 6F.82 Crash Cushions—crashworthiness—January 17, 2005.

Section 7B.08 School Advance Warning Assembly (S1-1 with Supplemental Plaque)—use of AHEAD plaque (W16-9p) or distance plaque (W16-2 or W16-2a)—January 17, 2011.

Section 7B.09 School Crosswalk Warning Assembly (S1-1 with Diagonal Arrow)—elimination of crosswalk lines from crossing signs and use of diagonal downward pointing arrow supplemental plaque (W16-7) —January 17, 2011.

Section 7B.12 Reduced Speed School Zone Ahead Sign (S4-5, S4-5a)—15 years from the effective date of the Final Rule for the 2003 MUTCD.

Section 7E.04 Uniform of Adult Crossing Guards and Student Patrols—requirement for high-visibility apparel for adult crossing guards—5 years from the effective date of the Final Rule for the 2003 MUTCD.

Section 8B.03 Highway-Rail Grade Crossing (Crossbuck) Sign (R15-1) and Number of Tracks Sign (R15-2)—retroreflective strip on crossbuck support—January 17, 2011.

Section 8B.04 Highway-Rail Grade Crossing Advance Warning Signs (W10 Series)—removal of existing W10-6 series signs—January 17, 2006.

Section 8D.07 Traffic Control Signals at or Near Highway-Rail Grade Crossings—pre-signals—10 years from the effective date of the Final Rule for the 2003 MUTCD.

Section 9B.04 Bicycle Lane Signs (R3-17, R3-17a, R3-17b)—deletion of preferential lane symbol (diamond) for bicycle lane signs—January 17, 2006.

Section 9B.17 Bicycle Warning Sign (W11-1)—elimination of crosswalk lines from crossing signs and use of diagonal downward pointing arrow supplemental plaque (W16-7) if at the crossing—January 17, 2011.

Chapter 9C Markings—deletion of preferential lane symbol (diamond) for bicycle pavement markings—January 17, 2007.

Part 10 Traffic Controls for Highway-Light Rail Transit Grade Crossings—automatic gates, flashing-light signals, and blank-out signs—January 17, 2011.

Section 10C.15 Highway-Rail Grade Crossing Advance Warning Signs (W10 Series)—removal of existing W10-6 series signs—January 17, 2006.

Option:

In order for maintenance personnel to understand what to do when replacing a damaged non-compliant traffic control device, agencies may establish a policy regarding whether to replace the device in kind or to replace it with a compliant device.

Support:

Often it is desirable to upgrade to a compliant device at the time of this maintenance of a damaged device. However, it might be appropriate to replace the damaged non-compliant device in kind at the time of this maintenance activity if engineering judgment indicates that:

A. One compliant device in the midst of a series of adjacent non-compliant devices could potentially be confusing to road users; and/or
B. The anticipated schedule for replacement of the whole series of non-compliant devices will result in achieving timely compliance with the MUTCD.

MANUAL ON UNIFORM TRAFFIC CONTROL DEVICES

TABLE OF CONTENTS

INTRODUCTION

PART 1. GENERAL

Chapter 1A. General

PART 2. SIGNS

Chapter 2A. General
Chapter 2B. Regulatory Signs
Chapter 2C. Warning Signs
Chapter 2D. Guide Signs — Conventional Roads
Chapter 2E. Guide Signs — Freeways and Expressways
Chapter 2F. Specific Service Signs
Chapter 2G. Tourist-Oriented Directional Signs
Chapter 2H. Recreational and Cultural Interest Area Signs
Chapter 2I. Emergency Management Signing

PART 3. MARKINGS

Chapter 3A. General
Chapter 3B. Pavement and Curb Markings
Chapter 3C. Object Markers
Chapter 3D. Delineators
Chapter 3E. Colored Pavements
Chapter 3F. Barricades and Channelizing Devices
Chapter 3G. Islands

PART 4. HIGHWAY TRAFFIC SIGNALS

Chapter 4A. General
Chapter 4B. Traffic Control Signals — General
Chapter 4C. Traffic Control Signal Needs Studies
Chapter 4D. Traffic Control Signal Features
Chapter 4E. Pedestrian Control Features
Chapter 4F. Traffic Control Signals for Emergency Vehicle Access
Chapter 4G. Traffic Control Signals for One-Lane, Two-Way Facilities
Chapter 4H. Traffic Control Signals for Freeway Entrance Ramps
Chapter 4I. Traffic Control for Movable Bridges
Chapter 4J. Lane-Use Control Signals
Chapter 4K. Flashing Beacons
Chapter 4L. In-Roadway Lights

PART 5. TRAFFIC CONTROL DEVICES FOR LOW-VOLUME ROADS

Chapter 5A. General
Chapter 5B. Regulatory Signs
Chapter 5C. Warning Signs
Chapter 5D. Guide Signs
Chapter 5E. Markings
Chapter 5F. Traffic Control for Highway-Rail Grade Crossings
Chapter 5G. Temporary Traffic Control Zones

PART 6. TEMPORARY TRAFFIC CONTROL

Chapter 6A. General
Chapter 6B. Fundamental Principles
Chapter 6C. Temporary Traffic Control Elements
Chapter 6D. Pedestrian and Worker Safety
Chapter 6E. Flagger Control
Chapter 6F. Temporary Traffic Control Zone Devices
Chapter 6G. Temporary Traffic Control Zone Activities
Chapter 6H. Typical Applications
Chapter 6I. Control of Traffic Through Traffic Incident Management Areas

PART 7. TRAFFIC CONTROLS FOR SCHOOL AREAS

Chapter 7A. General
Chapter 7B. Signs
Chapter 7C. Markings
Chapter 7D. Signals
Chapter 7E. Crossing Supervision
Chapter 7F. Grade-Separated Crossings

PART 8. TRAFFIC CONTROLS FOR HIGHWAY-RAIL GRADE CROSSINGS

Chapter 8A. General
Chapter 8B. Signs and Markings
Chapter 8C. Illumination
Chapter 8D. Flashing-Light Signals, Gates, and Traffic Control Signals

PART 9. TRAFFIC CONTROLS FOR BICYCLE FACILITIES

Chapter 9A. General
Chapter 9B. Signs
Chapter 9C. Markings
Chapter 9D. Signals

PART 10. TRAFFIC CONTROLS FOR HIGHWAY-LIGHT RAIL TRANSIT GRADE CROSSINGS

Chapter 10A. General
Chapter 10B. Highway-Light Rail Transit Grade Crossing Control Systems
Chapter 10C. Signs, Illumination, and Markings
Chapter 10D. Highway-Light Rail Transit Active Traffic Control Grade Crossing Systems

APPENDIX A1. CONGRESSIONAL LEGISLATION

Exhibit 9 to MDOT's MSJ

JENNIFER M. GRANHOLM
GOVERNOR

STATE OF MICHIGAN
DEPARTMENT OF TRANSPORTATION
LANSING

GLORIA J. JEFF
DIRECTOR

January 4, 2005

James J. Steele, Division Administrator
Federal Highway Administration
315 West Allegan Street, Room 211
Lansing, MI 48933

Re: Michigan Manual of Uniform Traffic Control Devices (MMUTCD)

Dear Mr. Steele:

On November 20, 2003, the Federal Highway Administration (FHWA) released the 2003 Federal Manual of Uniform Traffic Control Devices (MUTCD). Both federal and state law requires the State of Michigan to have a manual in compliance with the federal version. To assist the states in the review process, federal law provides an adoption period of two years. Therefore, by November 20, 2005, the State of Michigan must be in compliance.

To make this possible, the Michigan Department of Transportation and State Police, who are responsible for the Michigan Manual of Uniform Traffic Control Devices (MMUTCD), will adopt the 2003 federal version with a supplement. The supplement will address those items in the Michigan Vehicle Code that conflict with the Federal MUTCD, and special items unique to Michigan. Until a supplement is produced, the 1994 MMUTCD will remain the official manual for the State of Michigan.

Enclosed for your approval is the redline/strikeout version of Michigan's supplement. This will allow you and your staff to review the changes proposed by the State Advisory Committee (SAC) of the MMUTCD. The SAC meeting minutes are also enclosed for your information. David Morena, FHWA Traffic and Safety Engineer, is a member of the SAC and has advised the committee during the review process.

If you have any questions, please contact me or Mark W. Bott, Traffic Operations Engineer at 517-335-2625.

Sincerely,

John C. Friend

John C. Friend
Engineer of Delivery

MURRAY D. VAN WAGONER BUILDING • P.O. BOX 30050 • LANSING, MICHIGAN 48909
www.michigan.gov • (517) 373-2090

Enclosures

cc: L. Tibbits
J. Culp
A. Uzcategui
P. Corlett
B. Munroe
R. Cadena
J. Grossklaus
B. Zimmerman
D. Morena, FHWA
L. Cook, MSP
SAC
TSAD

EXHIBIT 10 TO MDOT's MSJ

Manual on Uniform Traffic Control Devices for Streets and Highways

2005 Michigan MUTCD
2003 Federal Edition

MDOT
Michigan Department of Transportation

MICHIGAN STATE POLICE

U.S. Department of Transportation
Federal Highway Administration

Dotted line indicates
edge of binder spine.

Manual on Uniform Traffic Control Devices

for Streets and Highways

MUTCD

2005 Michigan MUTCD

2003 Federal Edition

MDOT
Michigan Department of Transportation

U.S. Department of Transportation
Federal Highway Administration

Manual on Uniform Traffic Control Devices for Streets and Highways

2005 Michigan MUTCD
2003 Federal Edition

MDOT
Michigan Department of Transportation

MICHIGAN STATE POLICE

U.S. Department of Transportation
Federal Highway Administration

The Manual on Uniform Traffic Control Devices (MUTCD) is approved by the Federal Highway Administrator as the National Standard in accordance with Title 23 U.S. Code, Sections 109(d), 114(a), 217, 315, and 402(a), 23 CFR 655, and 49 CFR 1.48(b)(8), 1.48(b)(33), and 1.48(c)(2). The federal MUTCD can be downloaded at http://mutcd.fhwa.dot.gov/

Addresses for Publications Referenced in the MUTCD

American Association of State Highway and Transportation Officials (AASHTO)
444 North Capitol Street, NW, Suite 249
Washington, DC 20001
www.transportation.org

American Railway Engineering and Maintenance-of-Way Association (AREMA)
8201 Corporate Drive, Suite 1125
Landover, MD 20785-2230
www.arema.org

Federal Highway Administration Report Center
Facsimile number: 301.577.1421
report.center@fhwa.dot.gov

Illuminating Engineering Society (IES)
120 Wall Street, Floor 17
New York, NY 10005
www.iesna.org

Institute of Makers of Explosives
1120 19th Street, NW, Suite 310
Washington, DC 20036-3605
www.ime.org

Institute of Transportation Engineers (ITE)
1099 14th Street, NW, Suite 300 West
Washington, DC 20005-3438
www.ite.org

International Organization for Standards
c/o Mr. Gerard Kuso
Austrian Standards Institute
Heinestrabe 38
Postfach 130
A-1021
Wien, Austria
www.iso.ch

ISEA - The Safety Equipment Association
1901 North Moore Street, Suite 808
Arlington, VA 22209
www.safetyequipment.org

National Committee on Uniform Traffic Laws and Ordinances (NCUTLO)
107 South West Street, Suite 110
Alexandria, VA 22314
www.ncutlo.org

Occupational Safety and Health Administration (OSHA)
U.S. Department of Labor
200 Constitution Avenue, NW
Washington, DC 20210
www.osha.gov

Transportation Research Board (TRB)
The National Academies
2101 Constitution Avenue, NW
Washington, DC 20418
www.nas.edu/trb

U.S. Architectural and Transportation Barriers Compliance Board (The U.S. Access Board)
1331 F Street, NW, Suite 1000
Washington, DC 20004-1111
www.access-board.gov

Acknowledgments

The Federal Highway Administration gratefully acknowledges the valuable assistance that it received from the National Committee on Uniform Traffic Control Devices and its over 200 voluntary members in the development of this Manual.

STATE OF MICHIGAN

August 15, 2005

The Federal Highway Administration has approved and issued the 2003 Edition of the *Manual on Uniform Traffic Control Devices* as the National Standard for all highways open to public travel in accordance with Title 23 U.S. Code of Federal Regulations (CFR) Sections 109(d), 114(a), 217, 315, and 402(a), and 23 CFR 655, and 49 CFR 1.48(b)(33), and 1.48(c)(2).

Pursuant to the provisions contained in Section 257.608 of the Michigan Vehicle Code (Public Act 300 of 1949), we certify we have examined this *Manual on Uniform Traffic Control Devices*. We hereby declare the Federal manual is adopted as the official manual for a uniform system of traffic control devices for the State of Michigan subject to such amendments as are set forth in the Michigan Supplement to address unique State laws and policies. Taken together, the Michigan Supplement and the National Manual become the *2005 Michigan Manual of Uniform Traffic Control Devices*. We hereby certify the provisions of the *2005 Michigan Manual on Uniform Traffic Control Devices* constitute the prescribed standards of design, construction, and application of traffic control devices for use upon highways within this State and declare these to be the standards for adoption by the State, counties, and municipalities. The provisions contained herein shall supersede the policies and standards established by all official manuals published previously.

Gloria J. Jeff, Director
Michigan Department of Transportation

Colonel Tadarial J. Sturdivant, Director
Michigan State Police

JENNIFER M. GRANHOLM
GOVERNOR

STATE OF MICHIGAN
DEPARTMENT OF TRANSPORTATION
LANSING

GLORIA J. JEFF
DIRECTOR

August 8, 2005 File No. 35-47

Re: Michigan Manual of Uniform Traffic Control Devices (MMUTCD)

The Michigan Department of Transportation (MDOT) and Michigan State Police (MSP), are proud to announce the release of the 2005 Michigan Manual of Uniform Traffic Control Devices (MMUTCD). Both MDOT and MSP, per state law, are responsible for the MMUTCD. The State of Michigan has adopted the 2003 Federal Manual on Traffic Control Devices (MUTCD) with a supplement. The supplement addresses those items in the Michigan Vehicle Code that conflict with the 2003 Federal MUTCD and Special items unique to Michigan.

The effective date of the MMUTCD is August 15, 2005, for all sections except Part 6, Temporary Traffic Control. Part 6, Temporary Traffic Control, will go into effect October 1, 2005. The later date is to allow roadway agencies and contractors to adjust, as necessary, their maintaining traffic plans for projects in the design phase. Until October 1, 2005, the 1994 Edition of Part 6, Construction and Maintenance (Revised January 2001) will govern for temporary traffic control.

Unless a particular traffic control device is damaged, non-compliant devices on existing highways and bikeways shall be brought into compliance with the current edition of the MMUTCD as part of the systematic upgrading of substandard traffic control devices (and installation of new required traffic control devices) required pursuant to the Highway Safety Program, 23 U.S.C.§ 402(a). In cases involving Federal-aid projects for new highway or bikeway construction or reconstruction, the traffic control devices installed (temporary or permanent) shall be in conformance with the MMUTCD before that highway is opened or re-opened to the public for unrestricted travel [23 CFR 655.603(d)(2)]. The Federal Highway Administration (FHWA) has the authority to establish other target compliance dates for implementation of particular changes to the MUTCD [23 CFR 655.603(d)(4)]. Attention is directed to Pages I-3(MI) to I-11(MI) of the Introduction for target compliance dates.

In order for maintenance personnel to understand what to do when replacing a damaged non-compliant traffic control device, agencies may establish a policy regarding whether to replace the device in kind or to replace it with a compliant device. Often it is desirable to upgrade to a compliant device at the time of this maintenance of a damaged device. However, it might be appropriate to replace the damaged non-compliant device in kind at the time of this maintenance activity if engineering judgment indicated that:

a. One compliant device in the midst of a series of adjacent non-compliant devices could potentially be confusing to road users; and/or

b. The anticipated schedule for replacement of the whole series of non-compliant devices will result in achieving timely compliance with the MMUTCD.

From time to time there will be revisions to the National MUTCD and the Michigan Supplement. These revisions will be incorporated in the Supplement upon the review and approval of both MDOT and MSP.

The MMUTCD is available from two sources; the MDOT Web site (www.michigan.gov/mdot) and Michigan's Local Technical Assistance Program at Michigan Technological University. Listed below is what is available from each organization:

MDOT Web site

- 2005 MMUTCD (2003 MUTCD with 2005 Michigan Supplement and Change List)
- 2005 Michigan Supplement
- 2003 Federal MUTCD
- 2005 MMUTCD Change List
- 2005 MMUTCD Compliance Dates
- Part 6 Temporary Traffic Control

All above documents are available in Acrobat.pdf format.

Michigan's Local Technical Assistance Program

- 2005 MMUTCD (2003 MUTCD with 2005 Michigan Supplement and Change List)
- 2005 Michigan Supplement

Both items are available in a 3-ring binder version and interactive CD for a nominal cost. Please refer to www.michiganltap.org or call 906-487-2102 for further information regarding the publication.

I would appreciate it if you could pass this information on to those involved with traffic control devices within your organization. Please call me at 517-335-2625 if you have any questions,

Sincerely,

Mark W. Bott
Traffic Operations Engineer

Enclosures

cc:	L. Tibbits	R. Cadena	SAC
	J. Friend	J. Grossklaus	P. Corlett
	J. Culp	B. Zimmerman	L. Cook, MSP
	A. Uzcategui	D. Morena, FHWA	B. Munroe
	A. Clover	T. Colling, Michigan LTAP	J. Townsend

MICHIGAN SUPPLEMENT
TO THE NATIONAL MANUAL ON UNIFORM TRAFFIC CONTROL DEVICES
INTRODUCTION TO THE SUPPLEMENT

As noted in the preceding certification, the 2005 edition of the Michigan Manual of Uniform Traffic Control Devices (MMUTCD) consists of the November 2003 edition of the National Manual on Uniform Traffic Control Devices (MUTCD), including subsequent official revisions thereto, as amended by this Michigan Supplement to the MUTCD. The MMUTCD (Acrobat.pdf) is available online at www.michigan.gov/mdot and can also be obtained in a 3-ring binder version or CD from Michigan's Local Technical Assistance Program at Michigan Technological University for a nominal cost. Refer to www.michiganltap.org or call 906-487-2102 for further information regarding the publication.

The part, section and paragraph numbers used in this supplement match the like numbers used in the MUTCD. Pages from this supplement are identified with a (MI) next to the page number. Sections modified from the MUTCD are identified with a (MI) next to the section title. Where no reference is made to a part, section or paragraph of the MUTCD, said part, section or paragraph has not been amended. Unless specifically noted, none of the provisions of the MUTCD are omitted. Where a section number appears in this supplement with the letters MI added before the paragraph number followed by (Michigan), such as 2C.MI59 (Michigan), such paragraph has no direct counterpart in the MUTCD. All modifications in the supplement are identified by a State of Michigan symbol in the page margin. New language added to the supplement which differs from the MUTCD is highlighted.

The meanings of the text headings of "Standard," "Guidance", "Option," and "Support" have the same meanings in this supplement as they do in the MUTCD. Attention is directed to Pages I-1 to I-3 of the Introduction to the MUTCD. Direct references from Michigan Statute are shown in italics and are current at this Supplement's publication date. All references to the Standard Highway Signs book will pertain to the Michigan version.

Unless a particular traffic control device is damaged, non-compliant devices on existing highways and bikeways shall be brought into compliance with the current edition of the MMUTCD as part of the systematic upgrading of substandard traffic control devices (and installation of new required traffic control devices) required pursuant to the Highway Safety Program, 23 U.S.C. § 402(a). In cases involving Federal-aid projects for new highway or bikeway construction or reconstruction, the traffic control devices installed (temporary or permanent) shall be in conformance with the MMUTCD before that highway is opened or re-opened to the public for unrestricted travel [23 CFR 655.603(d)(2)]. The Federal Highway Administration (FHWA) has the authority to establish other target compliance dates for implementation of particular changes to the MUTCD [23 CFR 655.603(d)(4)]. Attention is directed to Pages I-3 to I-6 of the Introduction for target compliance dates.

In order for maintenance personnel to understand what to do when replacing a damaged non-compliant traffic control device, agencies may establish a policy regarding whether to replace the device in kind or to replace it with a compliant device. Often it is a desirable to upgrade to a compliant device at the time of this maintenance of a damaged device. However, it might be appropriate to replace the damaged non-compliant device in kind at the time of this maintenance activity if engineering judgment indicates that:

a. One compliant device in the midst of a series of adjacent non-compliant devices could potentially be confusing to road users; and/or
b. The anticipated schedule for replacement of the whole series of non-compliant devices will result in achieving timely compliance with the MMUTCD.

From time to time there will be revisions to the National MUTCD and the Michigan Supplement. These revisions will be incorporated in the Supplement upon the review and approval of both the Michigan Department of Transportation and the State Police.

The MUTCD makes reference to the Uniform Vehicle Code (UVC). However, the Michigan Vehicle Code (Public Act 300 of 1949) (MVC) shall govern over the UVC. Section 257.608 of the Michigan Vehicle Code contains the authority for the MMUTCD. Sections 257.609 and 257.610 establish the responsibility for the erection and maintenance of traffic control devices on state highways and on county and local roads. Various other sections of the Michigan Vehicle Code, particularly in Chapter 257, deal with specific traffic regulations and control devices. All references from Michigan Statute, as shown in this Supplement, may not be current; therefore, Michigan Statute takes precedence.

MANUAL ON UNIFORM TRAFFIC CONTROL DEVICES
INTRODUCTION

Standard:

Traffic control devices shall be defined as all signs, signals, markings, and other devices used to regulate, warn, or guide traffic, placed on, over, or adjacent to a street, highway, pedestrian facility, or bikeway by authority of a public agency having jurisdiction.

The Manual on Uniform Traffic Control Devices (MUTCD) is incorporated by reference in 23 Code of Federal Regulations (CFR), Part 655, Subpart F and shall be recognized as the national standard for all traffic control devices installed on any street, highway, or bicycle trail open to public travel in accordance with 23 U.S.C. 109(d) and 402(a). The policies and procedures of the Federal Highway Administration (FHWA) to obtain basic uniformity of traffic control devices shall be as described in 23 CFR 655, Subpart F.

Any traffic control device design or application provision contained in this Manual shall be considered to be in the public domain. Traffic control devices contained in this Manual shall not be protected by a patent, trademark, or copyright, except for the Interstate Shield and any other items owned by FHWA.

Support:

The need for uniform standards was recognized long ago. The American Association of State Highway Officials (AASHO), now known as the American Association of State Highway and Transportation Officials (AASHTO), published a manual for rural highways in 1927, and the National Conference on Street and Highway Safety (NCSHS) published a manual for urban streets in 1930. In the early years, the necessity for unification of the standards applicable to the different classes of road and street systems was obvious. To meet this need, a joint committee of AASHO and NCSHS developed and published the original edition of this Manual on Uniform Traffic Control Devices (MUTCD) in 1935. That committee, now called the National Committee on Uniform Traffic Control Devices (NCUTCD), though changed from time to time in name, organization, and personnel, has been in continuous existence and has contributed to periodic revisions of this Manual. The FHWA has administered the MUTCD since the 1971 edition. The FHWA and its predecessor organizations have participated in the development and publishing of the previous editions. There were eight previous editions of the MUTCD, and several of those editions were revised one or more times. Table I-1 traces the evolution of the MUTCD, including the two manuals developed by AASHO and NCSHS.

Standard:

The U.S. Secretary of Transportation, under authority granted by the Highway Safety Act of 1966, decreed that traffic control devices on all streets and highways open to public travel in accordance with 23 U.S.C. 109(d) and 402(a) in each State shall be in substantial conformance with the Standards issued or endorsed by the FHWA.

Support:

23 CFR 655.603 adopts the MUTCD as the national standard for any street, highway, or bicycle trail open to public travel in accordance with 23 U.S.C. 109(d) and 402(a). The "Uniform Vehicle Code (UVC)" is one of the publications referenced in the MUTCD. The UVC contains a model set of motor vehicle codes and traffic laws for use throughout the United States. The States are encouraged to adopt Section 15-116 of the UVC, which states that, "No person shall install or maintain in any area of private property used by the public any sign, signal, marking, or other device intended to regulate, warn, or guide traffic unless it conforms with the State manual and specifications adopted under Section 15-104."

The Standard, Guidance, Option, and Support material described in this edition of the MUTCD provide the transportation professional with the information needed to make appropriate decisions regarding the use of traffic control devices on streets and highways. The material in this edition is organized to better differentiate between Standards that must be satisfied for the particular circumstances of a situation, Guidances that should be followed for the particular circumstances of a situation, and Options that may be applicable for the particular circumstances of a situation.

Throughout this Manual the headings Standard, Guidance, Option, and Support are used to classify the nature of the text that follows. Figures, tables, and illustrations supplement the text and might constitute a Standard, Guidance, Option, or Support. The user needs to refer to the appropriate text to classify the nature of the figure, table, or illustration.

Standard:

When used in this Manual, the text headings shall be defined as follows:

1. **Standard—a statement of required, mandatory, or specifically prohibitive practice regarding a traffic control device. All standards are labeled, and the text appears in bold type. The verb shall is typically used. Standards are sometimes modified by Options.**

Manual on Uniform Traffic Control Devices for Streets and Highways

2005 Michigan MUTCD
2003 Federal Edition

Part 2
Signs

MDOT
Michigan Department of Transportation

MICHIGAN STATE POLICE

U.S. Department of Transportation
Federal Highway Administration

Figure 2D-3. Route Signs (MI)

Interstate Route Sign
M1-1

Off-Interstate Business Route Sign
M1-2 (Loop)
M1-3 (Spur)

U.S. Route Sign
M1-4

County Route Sign
M1-5

Michigan Route Sign
M1-6

Forest Route Sign
M1-7

Option:

Interstate Route signs may contain the State name in white upper-case letters on a blue background.

Standard:

Off-Interstate Business Route signs (see Figure 2D-3) shall consist of a cutout shield carrying the number of the connecting Interstate route and the words BUSINESS and either LOOP or SPUR in capital letters. The legend and border shall be white on a green background, and the shield shall be the same shape and dimensions as the Interstate Route sign. In no instance shall the word INTERSTATE appear on the Off-Interstate Business Route sign.

Option:

The Off-Interstate Business Route sign may be used on a major highway that is not a part of the Interstate system, but one that serves the business area of a City from an interchange on the system. When used on a green guide sign, a white square or rectangle may be placed behind the shield to improve contrast.

Standard:

U.S. Route signs (see Figure 2D-3) shall consist of black numerals on a white shield surrounded by a black background without a border. This sign shall be used on all U.S. routes and in connection with route sign assemblies on intersecting highways.

A 600 x 600 mm (24 x 24 in) minimum sign size shall be used for U.S. route numbers with one or two digits, and a 750 x 600 mm (30 x 24 in) minimum sign size shall be used for U.S. route numbers having three digits.

The Michigan State Route signs shall be the M1-6 (see Figure 2D-3).

Guidance:

State Route signs (see Figure 2D-3) should be rectangular and should be approximately the same size as the U.S. Route sign. State Route signs should also be similar to the U.S. Route sign by containing approximately the same size black numerals on a white area surrounded by a black background without a border. The shape of the white area should be circular in the absence of any determination to the contrary by the individual State concerned.

Standard:

If County road authorities elect to establish and identify a special system of important County roads, a statewide policy for such signing shall be established that includes a uniform numbering system to uniquely identify each route. The County Route (M1-5) sign (see Figure 2D-3) shall consist of a pentagon shape with a yellow County name and route number and border on a blue background. County Route signs displaying two digits or the equivalent (letter and numeral, or two letters) shall be a minimum size of 450 x 450 mm (18 x 18 in); those carrying three digits or the equivalent shall be a minimum size of 600 x 600 mm (24 x 24 in).

EXHIBIT 11 TO MDOT's MSJ

U.S. Department
of Transportation
**Federal Highway
Administration**

RECEIVED
JAN 11 2005

Michigan Division

315 West Allegan Street, Room 201
Lansing, Michigan 48933

January 7, 2005

Jim

Mr. John C. Friend
Engineer of Delivery – B 235
Michigan Department of Transportation
P.O. Box 30050
Lansing, MI 48909

Dear Mr. Friend:

Thank you for your January 4, 2001 submittal of the redline/strikeout version of the proposed Michigan supplement to the 2003 national Manual on Uniform Traffic Control Devices (MUTCD). Thank you also for including our personnel in the committee deliberations that led to the proposed supplement.

We approve this supplement for use in Michigan, to be used in conjunction with the 2003 national MUTCD. The modifications contained in the supplement fall within the range of individual State authority and maintain substantial compliance with the base (2003) document. Please proceed to publish and distribute the Michigan supplement.

Sincerely,

David A. Morena

David A. Morena
Safety & Traffic Operations Engineer

For: James J. Steele
Division Administrator

BUCKLE UP AMERICA

Exhibit 12 to MDOT's MSJ

Manual on Uniform Traffic Control Devices

for Streets and Highways

2009 Edition

Including Revision 1 dated May 2012
and Revision 2 dated May 2012

U.S.Department of Transportation
Federal Highway Administration

Manual on Uniform Traffic Control Devices

2009 Edition

Including Revision 1 dated May 2012
and Revision 2 dated May 2012

The Manual on Uniform Traffic Control Devices (MUTCD) is approved by the Federal Highway Administrator as the National Standard in accordance with Title 23 U.S. Code, Sections 109(d), 114(a), 217, 315, and 402(a), 23 CFR 655, and 49 CFR 1.48(b)(8), 1.48(b)(33), and 1.48(c)(2).

Addresses for Publications Referenced in the MUTCD

American Automobile Association (AAA)
1000 AAA Drive
Heathrow, FL 32746
www.aaa.com
800-222-4357

American Association of State Highway and Transportation Officials (AASHTO)
444 North Capitol Street, NW, Suite 249
Washington, DC 20001
www.transportation.org
202-624-5800

American National Standards Institute (ANSI)
1819 L Street, NW, 6th Floor
Washington, DC 20036
www.ansi.org
202-293-8020

American Railway Engineering and Maintenance-of-Way Association (AREMA)
10003 Derekwood Lane, Suite 210
Lanham, MD 20706
www.arema.org
301-459-3200

Federal Highway Administration Report Center
Facsimile number: 814-239-2156
report.center@fhwa.dot.gov

Illuminating Engineering Society (IES)
120 Wall Street, Floor 17
New York, NY 10005
www.iesna.org
212-248-5000

Institute of Makers of Explosives
1120 19th Street, NW, Suite 310
Washington, DC 20036-3605
www.ime.org
202-429-9280

Institute of Transportation Engineers (ITE)
1099 14th Street, NW, Suite 300 West
Washington, DC 20005-3438
www.ite.org
202-289-0222

International Organization for Standardization
1, ch. de la Voie-Creuse
Case Postale 56
CH-1211
Geneva 20, Switzerland
www.iso.ch
011-41-22-749-0111

International Safety Equipment Association (ISEA)
1901 North Moore Street, Suite 808
Arlington, VA 22209
www.safetyequipment.org
703-525-1695

National Committee on Uniform Traffic Laws and Ordinances (NCUTLO)
107 South West Street, Suite 110
Alexandria, VA 22314
www.ncutlo.org
800-807-5290

National Electrical Manufacturers Association (NEMA)
1300 North 17th Street, Suite 1752
Rosslyn, VA 22209
www.nema.org
703-841-3200

Occupational Safety and Health Administration (OSHA)
U.S. Department of Labor
200 Constitution Avenue, NW
Washington, DC 20210
www.osha.gov
800-321-6742

Transportation Research Board (TRB)
The National Academies
500 Fifth Street, NW
Washington, DC 20001
www.nas.edu/trb
202-334-3072

U.S. Architectural and Transportation Barriers Compliance Board (The U.S. Access Board)
1331 F Street, NW, Suite 1000
Washington, DC 20004-1111
www.access-board.gov
202-272-0080

Acknowledgments

The Federal Highway Administration gratefully acknowledges the valuable assistance that it received from the National Committee on Uniform Traffic Control Devices and its more than 250 voluntary members in the development of this Manual.

Cover photographs © istockphoto.com/“Open Road” by: narvikk; “Road Closed Sign” by: Fred Hall; “Railroad Crossing” by: Michael Krinke. “Green Light” courtesy of Scott Wainwright. “Express Lane Entrance” courtesy of Kevin Sylvester.

MANUAL ON UNIFORM TRAFFIC CONTROL DEVICES
TABLE OF CONTENTS

Page

INTRODUCTION I-1

PART 1. GENERAL

CHAPTER 1A. GENERAL

Section 1A.01 Purpose of Traffic Control Devices 1
Section 1A.02 Principles of Traffic Control Devices 1
Section 1A.03 Design of Traffic Control Devices 1
Section 1A.04 Placement and Operation of Traffic Control Devices 2
Section 1A.05 Maintenance of Traffic Control Devices 2
Section 1A.06 Uniformity of Traffic Control Devices 2
Section 1A.07 Responsibility for Traffic Control Devices 2
Section 1A.08 Authority for Placement of Traffic Control Devices 3
Section 1A.09 Engineering Study and Engineering Judgment 4
Section 1A.10 Interpretations, Experimentations, Changes, and Interim Approvals 4
Section 1A.11 Relation to Other Publications 7
Section 1A.12 Color Code 10
Section 1A.13 Definitions of Headings, Words, and Phrases in this Manual 10
Section 1A.14 Meanings of Acronyms and Abbreviations in this Manual 23
Section 1A.15 Abbreviations Used on Traffic Control Devices 24

PART 2. SIGNS

CHAPTER 2A. GENERAL

Section 2A.01 Function and Purpose of Signs 27
Section 2A.02 Definitions 27
Section 2A.03 Standardization of Application 27
Section 2A.04 Excessive Use of Signs 27
Section 2A.05 Classification of Signs 28
Section 2A.06 Design of Signs 28
Section 2A.07 Retroreflectivity and Illumination 29
Section 2A.08 Maintaining Minimum Retroreflectivity 30
Section 2A.09 Shapes 32
Section 2A.10 Sign Colors 32
Section 2A.11 Dimensions 32
Section 2A.12 Symbols 34
Section 2A.13 Word Messages 35
Section 2A.14 Sign Borders 36
Section 2A.15 Enhanced Conspicuity for Standard Signs 36
Section 2A.16 Standardization of Location 37
Section 2A.17 Overhead Sign Installations 41
Section 2A.18 Mounting Height 42
Section 2A.19 Lateral Offset 43
Section 2A.20 Orientation 43
Section 2A.21 Posts and Mountings 44
Section 2A.22 Maintenance 44
Section 2A.23 Median Opening Treatments for Divided Highways with Wide Medians 44

CHAPTER 2B. REGULATORY SIGNS, BARRICADES, AND GATES

Section 2B.01 Application of Regulatory Signs 45
Section 2B.02 Design of Regulatory Signs 45
Section 2B.03 Size of Regulatory Signs 45
Section 2B.04 Right-of-Way at Intersections 49
Section 2B.05 STOP Sign (R1-1) and ALL WAY Plaque (R1-3P) 51
Section 2B.06 STOP Sign Applications 52
Section 2B.07 Multi-Way Stop Applications 52
Section 2B.08 YIELD Sign (R1-2) 53
Section 2B.09 YIELD Sign Applications 53
Section 2B.10 STOP Sign or YIELD Sign Placement 53
Section 2B.11 Yield Here To Pedestrians Signs and Stop Here For Pedestrians Signs (R1-5 Series) 54
Section 2B.12 In-Street and Overhead Pedestrian Crossing Signs (R1-6, R1-6a, R1-9, and R1-9a) 55
Section 2B.13 Speed Limit Sign (R2-1) 56
Section 2B.14 Truck Speed Limit Plaque (R2-2P) 58
Section 2B.15 Night Speed Limit Plaque (R2-3P) 58
Section 2B.16 Minimum Speed Limit Plaque (R2-4P) 59
Section 2B.17 Higher Fines Signs and Plaque (R2-6P, R2-10, and R2-11) 59
Section 2B.18 Movement Prohibition Signs (R3-1 through R3-4, R3-18, and R3-27) 60
Section 2B.19 Intersection Lane Control Signs (R3-5 through R3-8) 61
Section 2B.20 Mandatory Movement Lane Control Signs (R3-5, R3-5a, R3-7, and R3-20) 62
Section 2B.21 Optional Movement Lane Control Sign (R3-6) 63
Section 2B.22 Advance Intersection Lane Control Signs (R3-8 Series) 64
Section 2B.23 RIGHT (LEFT) LANE MUST EXIT Sign (R3-33) 64
Section 2B.24 Two-Way Left Turn Only Signs (R3-9a, R3-9b) 64
Section 2B.25 BEGIN and END Plaques (R3-9cP, R3-9dP) 64
Section 2B.26 Reversible Lane Control Signs (R3-9e through R3-9i) 65
Section 2B.27 Jughandle Signs (R3-23, R3-24, R3-25, and R3-26 Series) 67
Section 2B.28 DO NOT PASS Sign (R4-1) 72
Section 2B.29 PASS WITH CARE Sign (R4-2) 73
Section 2B.30 KEEP RIGHT EXCEPT TO PASS Sign (R4-16) and SLOWER TRAFFIC KEEP RIGHT Sign (R4-3) 73
Section 2B.31 TRUCKS USE RIGHT LANE Sign (R4-5) 73
Section 2B.32 Keep Right and Keep Left Signs (R4-7, R4-8) 73
Section 2B.33 STAY IN LANE Sign (R4-9) 74
Section 2B.34 RUNAWAY VEHICLES ONLY Sign (R4-10) 74
Section 2B.35 Slow Vehicle Turn-Out Signs (R4-12, R4-13, and R4-14) 74
Section 2B.36 DO NOT DRIVE ON SHOULDER Sign (R4-17) and DO NOT PASS ON SHOULDER Sign (R4-18) 75
Section 2B.37 DO NOT ENTER Sign (R5-1) 75
Section 2B.38 WRONG WAY Sign (R5-1a) 76
Section 2B.39 Selective Exclusion Signs 76
Section 2B.40 ONE WAY Signs (R6-1, R6-2) 77
Section 2B.41 Wrong-Way Traffic Control at Interchange Ramps 79
Section 2B.42 Divided Highway Crossing Signs (R6-3, R6-3a) 82
Section 2B.43 Roundabout Directional Arrow Signs (R6-4, R6-4a, and R6-4b) 84
Section 2B.44 Roundabout Circulation Plaque (R6-5P) 84
Section 2B.45 Examples of Roundabout Signing 84
Section 2B.46 Parking, Standing, and Stopping Signs (R7 and R8 Series) 88
Section 2B.47 Design of Parking, Standing, and Stopping Signs 89
Section 2B.48 Placement of Parking, Stopping, and Standing Signs 92
Section 2B.49 Emergency Restriction Signs (R8-4, R8-7, R8-8) 92
Section 2B.50 WALK ON LEFT FACING TRAFFIC and No Hitchhiking Signs (R9-1, R9-4, R9-4a) 92

Section 2B.51 Pedestrian Crossing Signs (R9-2, R9-3) 92
Section 2B.52 Traffic Signal Pedestrian and Bicycle Actuation Signs (R10-1 through R10-4, and R10-24 through R10-26) 94
Section 2B.53 Traffic Signal Signs (R10-5 through R10-30) 95
Section 2B.54 No Turn on Red Signs (R10-11 Series, R10-17a, and R10-30) 95
Section 2B.55 Photo Enforced Signs and Plaques (R10-18, R10-19P, R10-19aP) 97
Section 2B.56 Ramp Metering Signs (R10-28 and R10-29) 97
Section 2B.57 KEEP OFF MEDIAN Sign (R11-1) 97
Section 2B.58 ROAD CLOSED Sign (R11-2) and LOCAL TRAFFIC ONLY Signs (R11-3 Series, R11-4) 98
Section 2B.59 Weight Limit Signs (R12-1 through R12-5) 98
Section 2B.60 Weigh Station Signs (R13 Series) 99
Section 2B.61 TRUCK ROUTE Sign (R14-1) 99
Section 2B.62 Hazardous Material Signs (R14-2, R14-3) 99
Section 2B.63 National Network Signs (R14-4, R14-5) 100
Section 2B.64 Headlight Use Signs (R16-5 through R16-11) 100
Section 2B.65 FENDER BENDER Sign (R16-4) 101
Section 2B.66 Seat Belt Symbol 101
Section 2B.67 Barricades 101
Section 2B.68 Gates 101

CHAPTER 2C. WARNING SIGNS AND OBJECT MARKERS

Section 2C.01 Function of Warning Signs 103
Section 2C.02 Application of Warning Signs 103
Section 2C.03 Design of Warning Signs 103
Section 2C.04 Size of Warning Signs 103
Section 2C.05 Placement of Warning Signs 108
Section 2C.06 Horizontal Alignment Warning Signs 109
Section 2C.07 Horizontal Alignment Signs (W1-1 through W1-5, W1-11, W1-15) 110
Section 2C.08 Advisory Speed Plaque (W13-1P) 112
Section 2C.09 Chevron Alignment Sign (W1-8) 112
Section 2C.10 Combination Horizontal Alignment/Advisory Speed Signs (W1-1a, W1-2a) 113
Section 2C.11 Combination Horizontal Alignment/Intersection Signs (W1-10 Series) 113
Section 2C.12 One-Direction Large Arrow Sign (W1-6) 113
Section 2C.13 Truck Rollover Warning Sign (W1-13) 114
Section 2C.14 Advisory Exit and Ramp Speed Signs (W13-2 and W13-3) 114
Section 2C.15 Combination Horizontal Alignment/Advisory Exit and Ramp Speed Signs (W13-6 and W13-7) 115
Section 2C.16 Hill Signs (W7-1, W7-1a) 115
Section 2C.17 Truck Escape Ramp Signs (W7-4 Series) 115
Section 2C.18 HILL BLOCKS VIEW Sign (W7-6) 117
Section 2C.19 ROAD NARROWS Sign (W5-1) 117
Section 2C.20 NARROW BRIDGE Sign (W5-2) 118
Section 2C.21 ONE LANE BRIDGE Sign (W5-3) 118
Section 2C.22 Divided Highway Sign (W6-1) 119
Section 2C.23 Divided Highway Ends Sign (W6-2) 119
Section 2C.24 Freeway or Expressway Ends Signs (W19 Series) 119
Section 2C.25 Double Arrow Sign (W12-1) 119
Section 2C.26 DEAD END/NO OUTLET Signs (W14-1, W14-1a, W14-2, W14-2a) 119
Section 2C.27 Low Clearance Signs (W12-2 and W12-2a) 120
Section 2C.28 BUMP and DIP Signs (W8-1, W8-2) 120
Section 2C.29 SPEED HUMP Sign (W17-1) 120
Section 2C.30 PAVEMENT ENDS Sign (W8-3) 122
Section 2C.31 Shoulder Signs (W8-4, W8-9, W8-17, W8-23, and W8-25) 122
Section 2C.32 Surface Condition Signs (W8-5, W8-7, W8-8, W8-11, W8-13, and W8-14) 122

Section 2C.33 Warning Signs and Plaques for Motorcyclists (W8-15, W8-15P, and W8-16) 123
Section 2C.34 NO CENTER LINE Sign (W8-12) 123
Section 2C.35 Weather Condition Signs (W8-18, W8-19, W8-21, and W8-22) 123
Section 2C.36 Advance Traffic Control Signs (W3-1, W3-2, W3-3, W3-4) 123
Section 2C.37 Advance Ramp Control Signal Signs (W3-7 and W3-8) 124
Section 2C.38 Reduced Speed Limit Ahead Signs (W3-5, W3-5a) 124
Section 2C.39 DRAW BRIDGE Sign (W3-6) 125
Section 2C.40 Merge Signs (W4-1, W4-5) 125
Section 2C.41 Added Lane Signs (W4-3, W4-6) 126
Section 2C.42 Lane Ends Signs (W4-2, W9-1, W9-2) 126
Section 2C.43 RIGHT (LEFT) LANE EXIT ONLY AHEAD Sign (W9-7) 126
Section 2C.44 Two-Way Traffic Sign (W6-3) 127
Section 2C.45 NO PASSING ZONE Sign (W14-3) 127
Section 2C.46 Intersection Warning Signs (W2-1 through W2-8) 127
Section 2C.47 Two-Direction Large Arrow Sign (W1-7) 128
Section 2C.48 Traffic Signal Signs (W25-1, W25-2) 128
Section 2C.49 Vehicular Traffic Warning Signs (W8-6, W11-1, W11-5, W11-5a, W11-8, W11-10, W11-11, W11-12P, W11-14, W11-15, and W11-15a) 128
Section 2C.50 Non-Vehicular Warning Signs (W11-2, W11-3, W11-4, W11-6, W11-7, W11-9, and W11-16 through W11-22) 130
Section 2C.51 Playground Sign (W15-1) 131
Section 2C.52 NEW TRAFFIC PATTERN AHEAD Sign (W23-2) 131
Section 2C.53 Use of Supplemental Warning Plaques 131
Section 2C.54 Design of Supplemental Warning Plaques 132
Section 2C.55 Distance Plaques (W16-2 Series, W16-3 Series, W16-4P, W7-3aP) 132
Section 2C.56 Supplemental Arrow Plaques (W16-5P, W16-6P) 132
Section 2C.57 Hill-Related Plaques (W7-2 Series, W7-3 Series) 133
Section 2C.58 Advance Street Name Plaque (W16-8P, W16-8aP) 133
Section 2C.59 CROSS TRAFFIC DOES NOT STOP Plaque (W4-4P) 133
Section 2C.60 SHARE THE ROAD Plaque (W16-1P) 133
Section 2C.61 Photo Enforced Plaque (W16-10P) 134
Section 2C.62 NEW Plaque (W16-15P) 134
Section 2C.63 Object Marker Design and Placement Height 134
Section 2C.64 Object Markers for Obstructions Within the Roadway 135
Section 2C.65 Object Markers for Obstructions Adjacent to the Roadway 135
Section 2C.66 Object Markers for Ends of Roadways 136

CHAPTER 2D. GUIDE SIGNS—CONVENTIONAL ROADS

Section 2D.01 Scope of Conventional Road Guide Sign Standards 137
Section 2D.02 Application 137
Section 2D.03 Color, Retroreflection, and Illumination 137
Section 2D.04 Size of Signs 137
Section 2D.05 Lettering Style 138
Section 2D.06 Size of Lettering 138
Section 2D.07 Amount of Legend 140
Section 2D.08 Arrows 140
Section 2D.09 Numbered Highway Systems 142
Section 2D.10 Route Signs and Auxiliary Signs 142
Section 2D.11 Design of Route Signs 143
Section 2D.12 Design of Route Sign Auxiliaries 144
Section 2D.13 Junction Auxiliary Sign (M2-1) 144
Section 2D.14 Combination Junction Sign (M2-2) 145
Section 2D.15 Cardinal Direction Auxiliary Signs (M3-1 through M3-4) 145
Section 2D.16 Auxiliary Signs for Alternative Routes (M4 Series) 145

Section 2D.17 ALTERNATE Auxiliary Signs (M4-1, M4-1a) ... 145
Section 2D.18 BY-PASS Auxiliary Sign (M4-2) ... 146
Section 2D.19 BUSINESS Auxiliary Sign (M4-3) ... 146
Section 2D.20 TRUCK Auxiliary Sign (M4-4) ... 146
Section 2D.21 TO Auxiliary Sign (M4-5) ... 146
Section 2D.22 END Auxiliary Sign (M4-6) ... 146
Section 2D.23 BEGIN Auxiliary Sign (M4-14) ... 146
Section 2D.24 TEMPORARY Auxiliary Signs (M4-7, M4-7a) ... 147
Section 2D.25 Temporary Detour and Auxiliary Signs ... 147
Section 2D.26 Advance Turn Arrow Auxiliary Signs (M5-1, M5-2, and M5-3) ... 147
Section 2D.27 Lane Designation Auxiliary Signs (M5-4, M5-5, and M5-6) ... 148
Section 2D.28 Directional Arrow Auxiliary Signs (M6 Series) ... 148
Section 2D.29 Route Sign Assemblies ... 148
Section 2D.30 Junction Assembly ... 153
Section 2D.31 Advance Route Turn Assembly ... 153
Section 2D.32 Directional Assembly ... 153
Section 2D.33 Combination Lane-Use/Destination Overhead Guide Sign (D15-1) ... 154
Section 2D.34 Confirming or Reassurance Assemblies ... 155
Section 2D.35 Trailblazer Assembly ... 155
Section 2D.36 Destination and Distance Signs ... 156
Section 2D.37 Destination Signs (D1 Series) ... 156
Section 2D.38 Destination Signs at Circular Intersections ... 157
Section 2D.39 Destination Signs at Jughandles ... 158
Section 2D.40 Location of Destination Signs ... 158
Section 2D.41 Distance Signs (D2 Series) ... 161
Section 2D.42 Location of Distance Signs ... 161
Section 2D.43 Street Name Signs (D3-1 or D3-1a) ... 161
Section 2D.44 Advance Street Name Signs (D3-2) ... 163
Section 2D.45 Signing on Conventional Roads on Approaches to Interchanges ... 164
Section 2D.46 Freeway Entrance Signs (D13-3 and D13-3a) ... 170
Section 2D.47 Parking Area Guide Sign (D4-1) ... 171
Section 2D.48 PARK - RIDE Sign (D4-2) ... 171
Section 2D.49 Weigh Station Signing (D8 Series) ... 172
Section 2D.50 Community Wayfinding Signs ... 172
Section 2D.51 Truck, Passing, or Climbing Lane Signs (D17-1 and D17-2) ... 178
Section 2D.52 Slow Vehicle Turn-Out Sign (D17-7) ... 178
Section 2D.53 Signing of Named Highways ... 179
Section 2D.54 Crossover Signs (D13-1 and D13-2) ... 179
Section 2D.55 National Scenic Byways Signs (D6-4, D6-4a) ... 179

CHAPTER 2E. GUIDE SIGNS—FREEWAYS AND EXPRESSWAYS

Section 2E.01 Scope of Freeway and Expressway Guide Sign Standards ... 181
Section 2E.02 Freeway and Expressway Signing Principles ... 181
Section 2E.03 Guide Sign Classification ... 181
Section 2E.04 General ... 182
Section 2E.05 Color of Guide Signs ... 182
Section 2E.06 Retroreflection or Illumination ... 182
Section 2E.07 Characteristics of Urban Signing ... 182
Section 2E.08 Characteristics of Rural Signing ... 183
Section 2E.09 Signing of Named Highways ... 183
Section 2E.10 Amount of Legend on Guide Signs ... 183
Section 2E.11 Number of Signs at an Overhead Installation and Sign Spreading ... 183
Section 2E.12 Pull-Through Signs (E6-2, E6-2a) ... 184
Section 2E.13 Designation of Destinations ... 184

Section 2E.14 Size and Style of Letters and Signs 185
Section 2E.15 lnterline and Edge Spacing 185
Section 2E.16 Sign Borders 192
Section 2E.17 Abbreviations 192
Section 2E.18 Symbols 192
Section 2E.19 Arrows for Interchange Guide Signs 192
Section 2E.20 Signing for Option Lanes at Splits and Multi-Lane Exits 193
Section 2E.21 Design of Overhead Arrow-per-Lane Guide Signs for Option Lanes 193
Section 2E.22 Design of Freeway and Expressway Diagrammatic Guide Signs for Option Lanes 198
Section 2E.23 Signing for Intermediate and Minor Interchange Multi-Lane Exits with an Option Lane 203
Section 2E.24 Signing for Interchange Lane Drops 203
Section 2E.25 Overhead Sign Installations 206
Section 2E.26 Lateral Offset 210
Section 2E.27 Route Signs and Trailblazer Assemblies 210
Section 2E.28 Eisenhower Interstate System Signs (M1-10, M1-10a) 211
Section 2E.29 Signs for Intersections at Grade 211
Section 2E.30 Interchange Guide Signs 211
Section 2E.31 Interchange Exit Numbering 212
Section 2E.32 Interchange Classification 216
Section 2E.33 Advance Guide Signs 216
Section 2E.34 Next Exit Plaques 218
Section 2E.35 Other Supplemental Guide Signs 218
Section 2E.36 Exit Direction Signs 220
Section 2E.37 Exit Gore Signs (E5-1 Series) 222
Section 2E.38 Post-Interchange Signs 222
Section 2E.39 Post-Interchange Distance Signs 223
Section 2E.40 Interchange Sequence Signs 223
Section 2E.41 Community Interchanges Identification Signs 225
Section 2E.42 NEXT XX EXITS Sign 225
Section 2E.43 Signing by Type of Interchange 226
Section 2E.44 Freeway-to-Freeway Interchange 226
Section 2E.45 Cloverleaf Interchange 226
Section 2E.46 Cloverleaf Interchange with Collector-Distributor Roadways 230
Section 2E.47 Partial Cloverleaf Interchange 230
Section 2E.48 Diamond Interchange 230
Section 2E.49 Diamond Interchange in Urban Area 234
Section 2E.50 Closely-Spaced Interchanges 234
Section 2E.51 Minor Interchange 234
Section 2E.52 Signing on Conventional Road Approaches and Connecting Roadways 235
Section 2E.53 Wrong-Way Traffic Control at Interchange Ramps 235
Section 2E.54 Weigh Station Signing 236

CHAPTER 2F. TOLL ROAD SIGNS

Section 2F.01 Scope 237
Section 2F.02 Sizes of Toll Road Signs 237
Section 2F.03 Use of Purple Backgrounds and Underlay Panels with ETC Account Pictographs 238
Section 2F.04 Size of ETC Pictographs 238
Section 2F.05 Regulatory Signs for Toll Plazas 238
Section 2F.06 Pay Toll Advance Warning Sign (W9-6) 240
Section 2F.07 Pay Toll Advance Warning Plaque (W9-6P) 241
Section 2F.08 Stop Ahead Pay Toll Warning Sign (W9-6a) 242
Section 2F.09 Stop Ahead Pay Toll Warning Plaque (W9-6aP) 242
Section 2F.10 LAST EXIT BEFORE TOLL Warning Plaque (W16-16P) 242
Section 2F.11 TOLL Auxiliary Sign (M4-15) 242

Section 2F.12 Electronic Toll Collection (ETC) Account-Only Auxiliary Signs (M4-16 and M4-20) 243
Section 2F.13 Toll Facility and Toll Plaza Guide Signs – General 243
Section 2F.14 Advance Signs for Conventional Toll Plazas 248
Section 2F.15 Advance Signs for Toll Plazas on Diverging Alignments from Open-Road ETC Account-Only Lanes 249
Section 2F.16 Toll Plaza Canopy Signs 252
Section 2F.17 Guide Signs for Entrances to ETC Account-Only Facilities 252
Section 2F.18 ETC Program Information Signs 252

CHAPTER 2G. PREFERENTIAL AND MANAGED LANE SIGNS

Section 2G.01 Scope 253
Section 2G.02 Sizes of Preferential and Managed Lane Signs 253
Section 2G.03 Regulatory Signs for Preferential Lanes – General 253
Section 2G.04 Preferential Lane Vehicle Occupancy Definition Regulatory Signs (R3-10 Series and R3-13 Series) 258
Section 2G.05 Preferential Lane Periods of Operation Regulatory Signs (R3-11 Series and R3-14 Series) ... 259
Section 2G.06 Preferential Lane Advance Regulatory Signs (R3-12, R3-12e, R3-12f, R3-15, R3-15a, and R3-15d) 263
Section 2G.07 Preferential Lane Ends Regulatory Signs (R3-12a, R3-12b, R3-12c, R3-12d, R3-12g, R3-12h, R3-15b, R3-15c, and R3-15e) 263
Section 2G.08 Warning Signs on Median Barriers for Preferential Lanes 263
Section 2G.09 High-Occupancy Vehicle (HOV) Plaque (W16-11P) 264
Section 2G.10 Preferential Lane Guide Signs – General 265
Section 2G.11 Guide Signs for Initial Entry Points to Preferential Lanes 267
Section 2G.12 Guide Signs for Intermediate Entry Points to Preferential Lanes 268
Section 2G.13 Guide Signs for Egress from Preferential Lanes to General-Purpose Lanes 270
Section 2G.14 Guide Signs for Direct Entrances to Preferential Lanes from Another Highway 273
Section 2G.15 Guide Signs for Direct Exits from Preferential Lanes to Another Highway 273
Section 2G.16 Signs for Priced Managed Lanes – General 276
Section 2G.17 Regulatory Signs for Priced Managed Lanes 279
Section 2G.18 Guide Signs for Priced Managed Lanes 279

CHAPTER 2H. GENERAL INFORMATION SIGNS

Section 2H.01 Sizes of General Information Signs 292
Section 2H.02 General Information Signs (I Series) 292
Section 2H.03 Traffic Signal Speed Sign (I1-1) 294
Section 2H.04 Miscellaneous Information Signs 294
Section 2H.05 Reference Location Signs (D10-1 through D10-3) and Intermediate Reference Location Signs (D10-1a through D10-3a) 294
Section 2H.06 Enhanced Reference Location Signs (D10-4, D10-5) 296
Section 2H.07 Auto Tour Route Signs 297
Section 2H.08 Acknowledgment Signs 297

CHAPTER 2I. GENERAL SERVICE SIGNS

Section 2I.01 Sizes of General Service Signs 299
Section 2I.02 General Service Signs for Conventional Roads 300
Section 2I.03 General Service Signs for Freeways and Expressways 303
Section 2I.04 Interstate Oasis Signing 306
Section 2I.05 Rest Area and Other Roadside Area Signs 307
Section 2I.06 Brake Check Area Signs (D5-13 and D5-14) 308
Section 2I.07 Chain-Up Area Signs (D5-15 and D5-16) 308
Section 2I.08 Tourist Information and Welcome Center Signs 308
Section 2I.09 Radio Information Signing 310
Section 2I.10 TRAVEL INFO CALL 511 Signs (D12-5 and D12-5a) 311
Section 2I.11 Carpool and Ridesharing Signing 311

CHAPTER 2J. SPECIFIC SERVICE SIGNS

Section 2J.01 Eligibility 312
Section 2J.02 Application 313
Section 2J.03 Logos and Logo Sign Panels 313
Section 2J.04 Number and Size of Signs and Logo Sign Panels 317
Section 2J.05 Size of Lettering 317
Section 2J.06 Signs at Interchanges 317
Section 2J.07 Single-Exit Interchanges 317
Section 2J.08 Double-Exit Interchanges 318
Section 2J.09 Specific Service Trailblazer Signs 318
Section 2J.10 Signs at Intersections 319
Section 2J.11 Signing Policy 319

CHAPTER 2K. TOURIST-ORIENTED DIRECTIONAL SIGNS

Section 2K.01 Purpose and Application 320
Section 2K.02 Design 320
Section 2K.03 Style and Size of Lettering 323
Section 2K.04 Arrangement and Size of Signs 323
Section 2K.05 Advance Signs 323
Section 2K.06 Sign Locations 324
Section 2K.07 State Policy 324

CHAPTER 2L. CHANGEABLE MESSAGE SIGNS

Section 2L.01 Description of Changeable Message Signs 325
Section 2L.02 Applications of Changeable Message Signs 325
Section 2L.03 Legibility and Visibility of Changeable Message Signs 326
Section 2L.04 Design Characteristics of Changeable Message Signs 326
Section 2L.05 Message Length and Units of Information 328
Section 2L.06 Installation of Permanent Changeable Message Signs 329

CHAPTER 2M. RECREATIONAL AND CULTURAL INTEREST AREA SIGNS

Section 2M.01 Scope 330
Section 2M.02 Application of Recreational and Cultural Interest Area Signs 330
Section 2M.03 Regulatory and Warning Signs 330
Section 2M.04 General Design Requirements for Recreational and Cultural Interest Area Symbol Guide Signs 330
Section 2M.05 Symbol Sign Sizes 332
Section 2M.06 Use of Educational Plaques 332
Section 2M.07 Use of Prohibitive Circle and Diagonal Slash for Non-Road Applications 332
Section 2M.08 Placement of Recreational and Cultural Interest Area Symbol Signs 332
Section 2M.09 Destination Guide Signs 333
Section 2M.10 Memorial or Dedication Signing 339

CHAPTER 2N. EMERGENCY MANAGEMENT SIGNING

Section 2N.01 Emergency Management 342
Section 2N.02 Design of Emergency Management Signs 342
Section 2N.03 Evacuation Route Signs (EM-1 and EM-1a) 342
Section 2N.04 AREA CLOSED Sign (EM-2) 344
Section 2N.05 TRAFFIC CONTROL POINT Sign (EM-3) 344
Section 2N.06 MAINTAIN TOP SAFE SPEED Sign (EM-4) 344
Section 2N.07 ROAD (AREA) USE PERMIT REQUIRED FOR THRU TRAFFIC Sign (EM-5) 345
Section 2N.08 Emergency Aid Center Signs (EM-6 Series) 345
Section 2N.09 Shelter Directional Signs (EM-7 Series) 346

PART 3. MARKINGS

CHAPTER 3A. GENERAL

Section 3A.01 Functions and Limitations 347
Section 3A.02 Standardization of Application 347
Section 3A.03 Maintaining Minimum Pavement Marking Retroreflectivity 347
Section 3A.04 Materials 347
Section 3A.05 Colors 348
Section 3A.06 Functions, Widths, and Patterns of Longitudinal Pavement Markings 348

CHAPTER 3B. PAVEMENT AND CURB MARKINGS

Section 3B.01 Yellow Center Line Pavement Markings and Warrants 349
Section 3B.02 No-Passing Zone Pavement Markings and Warrants 352
Section 3B.03 Other Yellow Longitudinal Pavement Markings 354
Section 3B.04 White Lane Line Pavement Markings and Warrants 356
Section 3B.05 Other White Longitudinal Pavement Markings 370
Section 3B.06 Edge Line Pavement Markings 371
Section 3B.07 Warrants for Use of Edge Lines 371
Section 3B.08 Extensions Through Intersections or Interchanges 371
Section 3B.09 Lane-Reduction Transition Markings 374
Section 3B.10 Approach Markings for Obstructions 376
Section 3B.11 Raised Pavement Markers – General 376
Section 3B.12 Raised Pavement Markers as Vehicle Positioning Guides with Other Longitudinal Markings 379
Section 3B.13 Raised Pavement Markers Supplementing Other Markings 379
Section 3B.14 Raised Pavement Markers Substituting for Pavement Markings 380
Section 3B.15 Transverse Markings 381
Section 3B.16 Stop and Yield Lines 381
Section 3B.17 Do Not Block Intersection Markings 382
Section 3B.18 Crosswalk Markings 383
Section 3B.19 Parking Space Markings 385
Section 3B.20 Pavement Word, Symbol, and Arrow Markings 387
Section 3B.21 Speed Measurement Markings 393
Section 3B.22 Speed Reduction Markings 393
Section 3B.23 Curb Markings 394
Section 3B.24 Chevron and Diagonal Crosshatch Markings 395
Section 3B.25 Speed Hump Markings 395
Section 3B.26 Advance Speed Hump Markings 395

CHAPTER 3C. ROUNDABOUT MARKINGS

Section 3C.01 General 399
Section 3C.02 White Lane Line Pavement Markings for Roundabouts 413
Section 3C.03 Edge Line Pavement Markings for Roundabout Circulatory Roadways 413
Section 3C.04 Yield Lines for Roundabouts 413
Section 3C.05 Crosswalk Markings at Roundabouts 413
Section 3C.06 Word, Symbol, and Arrow Pavement Markings for Roundabouts 413
Section 3C.07 Markings for Other Circular Intersections 414

CHAPTER 3D MARKINGS FOR PREFERENTIAL LANES

Section 3D.01 Preferential Lane Word and Symbol Markings 415
Section 3D.02 Preferential Lane Longitudinal Markings for Motor Vehicles 416

CHAPTER 3E. MARKINGS FOR TOLL PLAZAS

Section 3E.01 Markings for Toll Plazas 423

CHAPTER 3F DELINEATORS

Section 3F.01 Delineators 424
Section 3F.02 Delineator Design 424
Section 3F.03 Delineator Application 424
Section 3F.04 Delineator Placement and Spacing 426

CHAPTER 3G COLORED PAVEMENTS

Section 3G.01 General 428

CHAPTER 3H CHANNELIZING DEVICES USED FOR EMPHASIS OF PAVEMENT MARKING PATTERNS

Section 3H.01 Channelizing Devices 429

CHAPTER 3I ISLANDS

Section 3I.01 General 430
Section 3I.02 Approach-End Treatment 430
Section 3I.03 Island Marking Application 430
Section 3I.04 Island Marking Colors 430
Section 3I.05 Island Delineation 431
Section 3I.06 Pedestrian Islands and Medians 431

CHAPTER 3J RUMBLE STRIP MARKINGS

Section 3J.01 Longitudinal Rumble Strip Markings 432
Section 3J.02 Transverse Rumble Strip Markings 432

PART 4 HIGHWAY TRAFFIC SIGNALS

CHAPTER 4A GENERAL

Section 4A.01 Types 433
Section 4A.02 Definitions Relating to Highway Traffic Signals 433

CHAPTER 4B TRAFFIC CONTROL SIGNALS—GENERAL

Section 4B.01 General 434
Section 4B.02 Basis of Installation or Removal of Traffic Control Signals 434
Section 4B.03 Advantages and Disadvantages of Traffic Control Signals 434
Section 4B.04 Alternatives to Traffic Control Signals 435
Section 4B.05 Adequate Roadway Capacity 435

CHAPTER 4C TRAFFIC CONTROL SIGNAL NEEDS STUDIES

Section 4C.01 Studies and Factors for Justifying Traffic Control Signals 436
Section 4C.02 Warrant 1, Eight-Hour Vehicular Volume 437
Section 4C.03 Warrant 2, Four-Hour Vehicular Volume 439
Section 4C.04 Warrant 3, Peak Hour 439
Section 4C.05 Warrant 4, Pedestrian Volume 442
Section 4C.06 Warrant 5, School Crossing 442
Section 4C.07 Warrant 6, Coordinated Signal System 445
Section 4C.08 Warrant 7, Crash Experience 445
Section 4C.09 Warrant 8, Roadway Network 446
Section 4C.10 Warrant 9, Intersection Near a Grade Crossing 446

CHAPTER 4D TRAFFIC CONTROL SIGNAL FEATURES

Section 4D.01 General 449
Section 4D.02 Responsibility for Operation and Maintenance 449
Section 4D.03 Provisions for Pedestrians 450
Section 4D.04 Meaning of Vehicular Signal Indications 450

Section 4D.05 Application of Steady Signal Indications 453
Section 4D.06 Signal Indications – Design, Illumination, Color, and Shape 456
Section 4D.07 Size of Vehicular Signal Indications 456
Section 4D.08 Positions of Signal Indications Within a Signal Face – General 457
Section 4D.09 Positions of Signal Indications Within a Vertical Signal Face 457
Section 4D.10 Positions of Signal Indications Within a Horizontal Signal Face 459
Section 4D.11 Number of Signal Faces on an Approach 459
Section 4D.12 Visibility, Aiming, and Shielding of Signal Faces 461
Section 4D.13 Lateral Positioning of Signal Faces 463
Section 4D.14 Longitudinal Positioning of Signal Faces 464
Section 4D.15 Mounting Height of Signal Faces 465
Section 4D.16 Lateral Offset (Clearance) of Signal Faces 465
Section 4D.17 Signal Indications for Left-Turn Movements – General 465
Section 4D.18 Signal Indications for Permissive Only Mode Left-Turn Movements 467
Section 4D.19 Signal Indications for Protected Only Mode Left-Turn Movements 469
Section 4D.20 Signal Indications for Protected/Permissive Mode Left-Turn Movements 471
Section 4D.21 Signal Indications for Right-Turn Movements – General 474
Section 4D.22 Signal Indications for Permissive Only Mode Right-Turn Movements 475
Section 4D.23 Signal Indications for Protected Only Mode Right-Turn Movements 478
Section 4D.24 Signal Indications for Protected/Permissive Mode Right-Turn Movements 480
Section 4D.25 Signal Indications for Approaches With Shared Left-Turn/Right-Turn Lanes and No Through Movement 484
Section 4D.26 Yellow Change and Red Clearance Intervals 485
Section 4D.27 Preemption and Priority Control of Traffic Control Signals 489
Section 4D.28 Flashing Operation of Traffic Control Signals – General 491
Section 4D.29 Flashing Operation – Transition Into Flashing Mode 491
Section 4D.30 Flashing Operation – Signal Indications During Flashing Mode 491
Section 4D.31 Flashing Operation – Transition Out of Flashing Mode 492
Section 4D.32 Temporary and Portable Traffic Control Signals 492
Section 4D.33 Lateral Offset of Signal Supports and Cabinets 493
Section 4D.34 Use of Signs at Signalized Locations 493
Section 4D.35 Use of Pavement Markings at Signalized Locations 494

CHAPTER 4E PEDESTRIAN CONTROL FEATURES

Section 4E.01 Pedestrian Signal Heads 495
Section 4E.02 Meaning of Pedestrian Signal Head Indications 495
Section 4E.03 Application of Pedestrian Signal Heads 495
Section 4E.04 Size, Design, and Illumination of Pedestrian Signal Head Indications 496
Section 4E.05 Location and Height of Pedestrian Signal Heads 497
Section 4E.06 Pedestrian Intervals and Signal Phases 497
Section 4E.07 Countdown Pedestrian Signals 499
Section 4E.08 Pedestrian Detectors 500
Section 4E.09 Accessible Pedestrian Signals and Detectors – General 504
Section 4E.10 Accessible Pedestrian Signals and Detectors – Location 505
Section 4E.11 Accessible Pedestrian Signals and Detectors – Walk Indications 505
Section 4E.12 Accessible Pedestrian Signals and Detectors – Tactile Arrows and Locator Tones 507
Section 4E.13 Accessible Pedestrian Signals and Detectors – Extended Pushbutton Press Features 507

CHAPTER 4F PEDESTRIAN HYBRID BEACONS

Section 4F.01 Application of Pedestrian Hybrid Beacons 509
Section 4F.02 Design of Pedestrian Hybrid Beacons 509
Section 4F.03 Operation of Pedestrian Hybrid Beacons 511

CHAPTER 4G TRAFFIC CONTROL SIGNALS AND HYBRID BEACONS FOR EMERGENCY-VEHICLE ACCESS

Section 4G.01 Application of Emergency-Vehicle Traffic Control Signals and Hybrid Beacons 513
Section 4G.02 Design of Emergency-Vehicle Traffic Control Signals 513
Section 4G.03 Operation of Emergency-Vehicle Traffic Control Signals 513
Section 4G.04 Emergency-Vehicle Hybrid Beacons 514

CHAPTER 4H TRAFFIC CONTROL SIGNALS FOR ONE-LANE, TWO-WAY FACILITIES

Section 4H.01 Application of Traffic Control Signals for One-Lane, Two-Way Facilities 516
Section 4H.02 Design of Traffic Control Signals for One-Lane, Two-Way Facilities.....516
Section 4H.03 Operation of Traffic Control Signals for One-Lane, Two-Way Facilities 516

CHAPTER 4I TRAFFIC CONTROL SIGNALS FOR FREEWAY ENTRANCE RAMPS

Section 4I.01 Application of Freeway Entrance Ramp Control Signals.....517
Section 4I.02 Design of Freeway Entrance Ramp Control Signals 517
Section 4I.03 Operation of Freeway Entrance Ramp Control Signals 518

CHAPTER 4J TRAFFIC CONTROL FOR MOVABLE BRIDGES

Section 4J.01 Application of Traffic Control for Movable Bridges 519
Section 4J.02 Design and Location of Movable Bridge Signals and Gates 519
Section 4J.03 Operation of Movable Bridge Signals and Gates 521

CHAPTER 4K HIGHWAY TRAFFIC SIGNALS AT TOLL PLAZAS

Section 4K.01 Traffic Signals at Toll Plazas 522
Section 4K.02 Lane-Use Control Signals at or Near Toll Plazas 522
Section 4K.03 Warning Beacons at Toll Plazas 522

CHAPTER 4L FLASHING BEACONS

Section 4L.01 General Design and Operation of Flashing Beacons 523
Section 4L.02 Intersection Control Beacon 523
Section 4L.03 Warning Beacon 523
Section 4L.04 Speed Limit Sign Beacon 524
Section 4L.05 Stop Beacon 524

CHAPTER 4M LANE-USE CONTROL SIGNALS

Section 4M.01 Application of Lane-Use Control Signals 525
Section 4M.02 Meaning of Lane-Use Control Signal Indications 525
Section 4M.03 Design of Lane-Use Control Signals 526
Section 4M.04 Operation of Lane-Use Control Signals 527

CHAPTER 4N IN-ROADWAY LIGHTS

Section 4N.01 Application of In-Roadway Lights 528
Section 4N.02 In-Roadway Warning Lights at Crosswalks 528

PART 5 TRAFFIC CONTROL DEVICES FOR LOW-VOLUME ROADS

CHAPTER 5A GENERAL

Section 5A.01 Function 531
Section 5A.02 Application 531
Section 5A.03 Design 531
Section 5A.04 Placement 533

CHAPTER 5B REGULATORY SIGNS

Section 5B.01 Introduction 534
Section 5B.02 STOP and YIELD Signs (R1-1 and R1-2) 534

Section 5B.03 Speed Limit Signs (R2 Series) 534
Section 5B.04 Traffic Movement and Prohibition Signs (R3, R4, R5, R6, R9, R10, R11, R12, R13, and R14 Series) 535
Section 5B.05 Parking Signs (R8 Series) 535
Section 5B.06 Other Regulatory Signs 535

CHAPTER 5C WARNING SIGNS

Section 5C.01 Introduction 536
Section 5C.02 Horizontal Alignment Signs (W1-1 through W1-8) 536
Section 5C.03 Intersection Warning Signs (W2-1 through W2-6) 537
Section 5C.04 Stop Ahead and Yield Ahead Signs (W3-1, W3-2) 537
Section 5C.05 NARROW BRIDGE Sign (W5-2) 537
Section 5C.06 ONE LANE BRIDGE Sign (W5-3) 537
Section 5C.07 Hill Sign (W7-1) 537
Section 5C.08 PAVEMENT ENDS Sign (W8-3) 537
Section 5C.09 Vehicular Traffic Warning and Non-Vehicular Warning Signs (W11 Series and W8-6) 537
Section 5C.10 Advisory Speed Plaque (W13-1P) 539
Section 5C.11 DEAD END or NO OUTLET Signs (W14-1, W14-1a, W14-2, W14-2a) 539
Section 5C.12 NO TRAFFIC SIGNS Sign (W18-1) 539
Section 5C.13 Other Warning Signs 539
Section 5C.14 Object Markers and Barricades 539

CHAPTER 5D GUIDE SIGNS

Section 5D.01 Introduction 540

CHAPTER 5E MARKINGS

Section 5E.01 Introduction 541
Section 5E.02 Center Line Markings 541
Section 5E.03 Edge Line Markings 541
Section 5E.04 Delineators 541
Section 5E.05 Other Markings 541

CHAPTER 5F TRAFFIC CONTROL FOR HIGHWAY-RAIL GRADE CROSSINGS

Section 5F.01 Introduction 542
Section 5F.02 Grade Crossing (Crossbuck) Sign and Number of Tracks Plaque (R15-1, R15-2P) 542
Section 5F.03 Grade Crossing Advance Warning Signs (W10 Series) 542
Section 5F.04 STOP and YIELD Signs (R1-1, R1-2) 543
Section 5F.05 Pavement Markings 543
Section 5F.06 Other Traffic Control Devices 543

CHAPTER 5G TEMPORARY TRAFFIC CONTROL ZONES

Section 5G.01 Introduction 544
Section 5G.02 Applications 544
Section 5G.03 Channelization Devices 544
Section 5G.04 Markings 545
Section 5G.05 Other Traffic Control Devices 545

CHAPTER 5H TRAFFIC CONTROL FOR SCHOOL AREAS

Section 5H.01 Introduction 546

PART 6 TEMPORARY TRAFFIC CONTROL

CHAPTER 6A GENERAL

Section 6A.01 General 547

CHAPTER 6B FUNDAMENTAL PRINCIPLES

Section 6B.01 Fundamental Principles of Temporary Traffic Control 549

CHAPTER 6C TEMPORARY TRAFFIC CONTROL ELEMENTS

Section 6C.01 Temporary Traffic Control Plans 551
Section 6C.02 Temporary Traffic Control Zones 552
Section 6C.03 Components of Temporary Traffic Control Zones 552
Section 6C.04 Advance Warning Area 552
Section 6C.05 Transition Area 554
Section 6C.06 Activity Area 554
Section 6C.07 Termination Area 555
Section 6C.08 Tapers 555
Section 6C.09 Detours and Diversions 558
Section 6C.10 One-Lane, Two-Way Traffic Control 558
Section 6C.11 Flagger Method of One-Lane, Two-Way Traffic Control 558
Section 6C.12 Flag Transfer Method of One-Lane, Two-Way Traffic Control 558
Section 6C.13 Pilot Car Method of One-Lane, Two-Way Traffic Control 560
Section 6C.14 Temporary Traffic Control Signal Method of One-Lane, Two-Way Traffic Control 560
Section 6C.15 Stop or Yield Control Method of One-Lane, Two-Way Traffic Control 560

CHAPTER 6D PEDESTRIAN AND WORKER SAFETY

Section 6D.01 Pedestrian Considerations 561
Section 6D.02 Accessibility Considerations 563
Section 6D.03 Worker Safety Considerations 564

CHAPTER 6E FLAGGER CONTROL

Section 6E.01 Qualifications for Flaggers 566
Section 6E.02 High-Visibility Safety Apparel 566
Section 6E.03 Hand-Signaling Devices 566
Section 6E.04 Automated Flagger Assistance Devices 567
Section 6E.05 STOP/SLOW Automated Flagger Assistance Devices 569
Section 6E.06 Red/Yellow Lens Automated Flagger Assistance Devices 571
Section 6E.07 Flagger Procedures 573
Section 6E.08 Flagger Stations 575

CHAPTER 6F TEMPORARY TRAFFIC CONTROL ZONE DEVICES

Section 6F.01 Types of Devices 576
Section 6F.02 General Characteristics of Signs 576
Section 6F.03 Sign Placement 577
Section 6F.04 Sign Maintenance 583
Section 6F.05 Regulatory Sign Authority 583
Section 6F.06 Regulatory Sign Design 583
Section 6F.07 Regulatory Sign Applications 583
Section 6F.08 ROAD (STREET) CLOSED Sign (R11-2) 583
Section 6F.09 Local Traffic Only Signs (R11-3a, R11-4) 585
Section 6F.10 Weight Limit Signs (R12-1, R12-2, R12-5) 585
Section 6F.11 STAY IN LANE Sign (R4-9) 586
Section 6F.12 Work Zone and Higher Fines Signs and Plaques 586
Section 6F.13 PEDESTRIAN CROSSWALK Sign (R9-8) 586
Section 6F.14 SIDEWALK CLOSED Signs (R9-9, R9-10, R9-11, R9-11a) 586

Section 6F.15 Special Regulatory Signs 587
Section 6F.16 Warning Sign Function, Design, and Application 587
Section 6F.17 Position of Advance Warning Signs 587
Section 6F.18 ROAD (STREET) WORK Sign (W20-1) 591
Section 6F.19 DETOUR Sign (W20-2) 591
Section 6F.20 ROAD (STREET) CLOSED Sign (W20-3) 591
Section 6F.21 ONE LANE ROAD Sign (W20-4) 591
Section 6F.22 Lane(s) Closed Signs (W20-5, W20-5a) 591
Section 6F.23 CENTER LANE CLOSED AHEAD Sign (W9-3) 592
Section 6F.24 Lane Ends Sign (W4-2) 592
Section 6F.25 ON RAMP Plaque (W13-4P) 592
Section 6F.26 RAMP NARROWS Sign (W5-4) 592
Section 6F.27 SLOW TRAFFIC AHEAD Sign (W23-1) 592
Section 6F.28 EXIT OPEN and EXIT CLOSED Signs (E5-2, E5-2a) 592
Section 6F.29 EXIT ONLY Sign (E5-3) 593
Section 6F.30 NEW TRAFFIC PATTERN AHEAD Sign (W23-2) 593
Section 6F.31 Flagger Signs (W20-7, W20-7a) 593
Section 6F.32 Two-Way Traffic Sign (W6-3) 593
Section 6F.33 Workers Signs (W21-1, W21-1a) 593
Section 6F.34 FRESH OIL (TAR) Sign (W21-2) 593
Section 6F.35 ROAD MACHINERY AHEAD Sign (W21-3) 593
Section 6F.36 Motorized Traffic Signs (W8-6, W11-10) 594
Section 6F.37 Shoulder Work Signs (W21-5, W21-5a, W21-5b) 594
Section 6F.38 SURVEY CREW Sign (W21-6) 594
Section 6F.39 UTILITY WORK Sign (W21-7) 594
Section 6F.40 Signs for Blasting Areas 594
Section 6F.41 BLASTING ZONE AHEAD Sign (W22-1) 595
Section 6F.42 TURN OFF 2-WAY RADIO AND CELL PHONE Sign (W22-2) 595
Section 6F.43 END BLASTING ZONE Sign (W22-3) 595
Section 6F.44 Shoulder Signs and Plaque (W8-4, W8-9, W8-17, and W8-17P) 595
Section 6F.45 UNEVEN LANES Sign (W8-11) 595
Section 6F.46 STEEL PLATE AHEAD Sign (W8-24) 595
Section 6F.47 NO CENTER LINE Sign (W8-12) 595
Section 6F.48 Reverse Curve Signs (W1-4 Series) 596
Section 6F.49 Double Reverse Curve Signs (W24-1 Series) 596
Section 6F.50 Other Warning Signs 596
Section 6F.51 Special Warning Signs 596
Section 6F.52 Advisory Speed Plaque (W13-1P) 596
Section 6F.53 Supplementary Distance Plaque (W7-3aP) 597
Section 6F.54 Motorcycle Plaque (W8-15P) 597
Section 6F.55 Guide Signs 597
Section 6F.56 ROAD WORK NEXT XX MILES Sign (G20-1) 597
Section 6F.57 END ROAD WORK Sign (G20-2) 598
Section 6F.58 PILOT CAR FOLLOW ME Sign (G20-4) 598
Section 6F.59 Detour Signs (M4-8, M4-8a, M4-8b, M4-9, M4-9a, M4-9b, M4-9c, and M4-10) 598
Section 6F.60 Portable Changeable Message Signs 598
Section 6F.61 Arrow Boards 601
Section 6F.62 High-Level Warning Devices (Flag Trees) 603
Section 6F.63 Channelizing Devices 604
Section 6F.64 Cones 606
Section 6F.65 Tubular Markers 606
Section 6F.66 Vertical Panels 607
Section 6F.67 Drums 607

Section 6F.68 Type 1, 2, or 3 Barricades 607
Section 6F.69 Direction Indicator Barricades 609
Section 6F.70 Temporary Traffic Barriers as Channelizing Devices 609
Section 6F.71 Longitudinal Channelizing Devices 609
Section 6F.72 Temporary Lane Separators 610
Section 6F.73 Other Channelizing Devices 610
Section 6F.74 Detectable Edging for Pedestrians 610
Section 6F.75 Temporary Raised Islands 611
Section 6F.76 Opposing Traffic Lane Divider and Sign (W6-4) 611
Section 6F.77 Pavement Markings 612
Section 6F.78 Temporary Markings 612
Section 6F.79 Temporary Raised Pavement Markers 613
Section 6F.80 Delineators 613
Section 6F.81 Lighting Devices 614
Section 6F.82 Floodlights 614
Section 6F.83 Warning Lights 614
Section 6F.84 Temporary Traffic Control Signals 615
Section 6F.85 Temporary Traffic Barriers 616
Section 6F.86 Crash Cushions 617
Section 6F.87 Rumble Strips 618
Section 6F.88 Screens 618

CHAPTER 6G TYPE OF TEMPORARY TRAFFIC CONTROL ZONE ACTIVITIES

Section 6G.01 Typical Applications 619
Section 6G.02 Work Duration 619
Section 6G.03 Location of Work 621
Section 6G.04 Modifications To Fulfill Special Needs 621
Section 6G.05 Work Affecting Pedestrian and Bicycle Facilities 622
Section 6G.06 Work Outside of the Shoulder 622
Section 6G.07 Work on the Shoulder with No Encroachment 623
Section 6G.08 Work on the Shoulder with Minor Encroachment 624
Section 6G.09 Work Within the Median 624
Section 6G.10 Work Within the Traveled Way of a Two-Lane Highway 624
Section 6G.11 Work Within the Traveled Way of an Urban Street 625
Section 6G.12 Work Within the Traveled Way of a Multi-Lane, Non-Access Controlled Highway 625
Section 6G.13 Work Within the Traveled Way at an Intersection 626
Section 6G.14 Work Within the Traveled Way of a Freeway or Expressway 627
Section 6G.15 Two-Lane, Two-Way Traffic on One Roadway of a Normally Divided Highway 628
Section 6G.16 Crossovers 628
Section 6G.17 Interchanges 628
Section 6G.18 Work in the Vicinity of a Grade Crossing 629
Section 6G.19 Temporary Traffic Control During Nighttime Hours 629

CHAPTER 6H TYPICAL APPLICATIONS

Section 6H.01 Typical Applications 631

CHAPTER 6I CONTROL OF TRAFFIC THROUGH TRAFFIC INCIDENT MANAGEMENT AREAS

Section 6I.01 General 726
Section 6I.02 Major Traffic Incidents 727
Section 6I.03 Intermediate Traffic Incidents 728
Section 6I.04 Minor Traffic Incidents 728
Section 6I.05 Use of Emergency-Vehicle Lighting 729

PART 7 TRAFFIC CONTROL FOR SCHOOL AREAS

CHAPTER 7A GENERAL

Section 7A.01 Need for Standards ... 731
Section 7A.02 School Routes and Established School Crossings ... 731
Section 7A.03 School Crossing Control Criteria ... 731
Section 7A.04 Scope ... 732

CHAPTER 7B SIGNS

Section 7B.01 Size of School Signs ... 733
Section 7B.02 Illumination and Reflectorization ... 734
Section 7B.03 Position of Signs ... 734
Section 7B.04 Height of Signs ... 734
Section 7B.05 Installation of Signs ... 734
Section 7B.06 Lettering ... 734
Section 7B.07 Sign Color for School Warning Signs ... 734
Section 7B.08 School Sign (S1-1) and Plaques ... 734
Section 7B.09 School Zone Sign (S1-1) and Plaques (S4-3P, S4-7P) and END SCHOOL ZONE Sign (S5-2) ... 736
Section 7B.10 Higher Fines Zone Signs (R2-10, R2-11) and Plaques ... 736
Section 7B.11 School Advance Crossing Assembly ... 736
Section 7B.12 School Crossing Assembly ... 741
Section 7B.13 School Bus Stop Ahead Sign (S3-1) ... 742
Section 7B.14 SCHOOL BUS TURN AHEAD Sign (S3-2) ... 742
Section 7B.15 School Speed Limit Assembly (S4-1P, S4-2P, S4-3P, S4-4P, S4-6P, S5-1) and END SCHOOL SPEED LIMIT Sign (S5-3) ... 742
Section 7B.16 Reduced School Speed Limit Ahead Sign (S4-5, S4-5a) ... 743
Section 7B.17 Parking and Stopping Signs (R7 and R8 Series) ... 743

CHAPTER 7C MARKINGS

Section 7C.01 Functions and Limitations ... 744
Section 7C.02 Crosswalk Markings ... 744
Section 7C.03 Pavement Word, Symbol, and Arrow Markings ... 744

CHAPTER 7D CROSSING SUPERVISION

Section 7D.01 Types of Crossing Supervision ... 745
Section 7D.02 Adult Crossing Guards ... 745
Section 7D.03 Qualifications of Adult Crossing Guards ... 745
Section 7D.04 Uniform of Adult Crossing Guards ... 745
Section 7D.05 Operating Procedures for Adult Crossing Guards ... 745

PART 8 TRAFFIC CONTROL FOR RAILROAD AND LIGHT RAIL TRANSIT GRADE CROSSINGS

CHAPTER 8A GENERAL

Section 8A.01 Introduction ... 747
Section 8A.02 Use of Standard Devices, Systems, and Practices at Highway-Rail Grade Crossings ... 747
Section 8A.03 Use of Standard Devices, Systems, and Practices at Highway-LRT Grade Crossings ... 748
Section 8A.04 Uniform Provisions ... 749
Section 8A.05 Grade Crossing Elimination ... 749
Section 8A.06 Illumination at Grade Crossings ... 750
Section 8A.07 Quiet Zone Treatments at Highway-Rail Grade Crossings ... 750
Section 8A.08 Temporary Traffic Control Zones ... 750

CHAPTER 8B SIGNS AND MARKINGS

Section 8B.01 Purpose 751
Section 8B.02 Sizes of Grade Crossing Signs 751
Section 8B.03 Grade Crossing (Crossbuck) Sign (R15-1) and Number of Tracks Plaque (R15-2P) at Active and Passive Grade Crossings 751
Section 8B.04 Crossbuck Assemblies with YIELD or STOP Signs at Passive Grade Crossings 754
Section 8B.05 Use of STOP (R1-1) or YIELD (R1-2) Signs without Crossbuck Signs at Highway-LRT Grade Crossings 758
Section 8B.06 Grade Crossing Advance Warning Signs (W10 Series) 758
Section 8B.07 EXEMPT Grade Crossing Plaques (R15-3P, W10-1aP) 759
Section 8B.08 Turn Restrictions During Preemption 760
Section 8B.09 DO NOT STOP ON TRACKS Sign (R8-8) 760
Section 8B.10 TRACKS OUT OF SERVICE Sign (R8-9) 760
Section 8B.11 STOP HERE WHEN FLASHING Signs (R8-10, R8-10a) 761
Section 8B.12 STOP HERE ON RED Signs (R10-6, R10-6a) 761
Section 8B.13 Light Rail Transit Only Lane Signs (R15-4 Series) 761
Section 8B.14 Do Not Pass Light Rail Transit Signs (R15-5, R15-5a) 761
Section 8B.15 No Motor Vehicles On Tracks Signs (R15-6, R15-6a) 762
Section 8B.16 Divided Highway with Light Rail Transit Crossing Signs (R15-7 Series) 762
Section 8B.17 LOOK Sign (R15-8) 762
Section 8B.18 Emergency Notification Sign (I-13) 762
Section 8B.19 Light Rail Transit Approaching-Activated Blank-Out Warning Sign (W10-7) 763
Section 8B.20 TRAINS MAY EXCEED 80 MPH Sign (W10-8) 763
Section 8B.21 NO TRAIN HORN Sign or Plaque (W10-9, W10-9P) 763
Section 8B.22 NO GATES OR LIGHTS Plaque (W10-13P) 763
Section 8B.23 Low Ground Clearance Grade Crossing Sign (W10-5) 763
Section 8B.24 Storage Space Signs (W10-11, W10-11a, W10-11b) 764
Section 8B.25 Skewed Crossing Sign (W10-12) 764
Section 8B.26 Light Rail Transit Station Sign (I-12) 764
Section 8B.27 Pavement Markings 764
Section 8B.28 Stop and Yield Lines 766
Section 8B.29 Dynamic Envelope Markings 767

CHAPTER 8C FLASHING-LIGHT SIGNALS, GATES, AND TRAFFIC CONTROL SIGNALS

Section 8C.01 Introduction 769
Section 8C.02 Flashing-Light Signals 769
Section 8C.03 Flashing-Light Signals at Highway-LRT Grade Crossings 772
Section 8C.04 Automatic Gates 772
Section 8C.05 Use of Automatic Gates at LRT Grade Crossings 773
Section 8C.06 Four-Quadrant Gate Systems 773
Section 8C.07 Wayside Horn Systems 775
Section 8C.08 Rail Traffic Detection 775
Section 8C.09 Traffic Control Signals at or Near Highway-Rail Grade Crossings 776
Section 8C.10 Traffic Control Signals at or Near Highway-LRT Grade Crossings 777
Section 8C.11 Use of Traffic Control Signals for Control of LRT Vehicles at Grade Crossings 778
Section 8C.12 Grade Crossings Within or In Close Proximity to Circular Intersections 780
Section 8C.13 Pedestrian and Bicycle Signals and Crossings at LRT Grade Crossings 780

CHAPTER 8D PATHWAY GRADE CROSSINGS

Section 8D.01 Purpose 786
Section 8D.02 Use of Standard Devices, Systems, and Practices 786
Section 8D.03 Pathway Grade Crossing Signs and Markings 786
Section 8D.04 Stop Lines, Edge Lines, and Detectable Warnings 786
Section 8D.05 Passive Devices for Pathway Grade Crossings 787
Section 8D.06 Active Traffic Control Systems for Pathway Grade Crossings 788

PART 9 TRAFFIC CONTROL FOR BICYCLE FACILITIES

CHAPTER 9A GENERAL

Section 9A.01 Requirements for Bicyclist Traffic Control Devices 789
Section 9A.02 Scope 789
Section 9A.03 Definitions Relating to Bicycles 789
Section 9A.04 Maintenance 789
Section 9A.05 Relation to Other Documents 789
Section 9A.06 Placement Authority 789
Section 9A.07 Meaning of Standard, Guidance, Option, and Support 789
Section 9A.08 Colors 789

CHAPTER 9B SIGNS

Section 9B.01 Application and Placement of Signs 790
Section 9B.02 Design of Bicycle Signs 790
Section 9B.03 STOP and YIELD Signs (R1-1, R1-2) 792
Section 9B.04 Bike Lane Signs and Plaques (R3-17, R3-17aP, R3-17bP) 794
Section 9B.05 BEGIN RIGHT TURN LANE YIELD TO BIKES Sign (R4-4) 794
Section 9B.06 Bicycles May Use Full Lane Sign (R4-11) 794
Section 9B.07 Bicycle WRONG WAY Sign and RIDE WITH TRAFFIC Plaque (R5-1b, R9-3cP) 794
Section 9B.08 NO MOTOR VEHICLES Sign (R5-3) 795
Section 9B.09 Selective Exclusion Signs 795
Section 9B.10 No Parking Bike Lane Signs (R7-9, R7-9a) 795
Section 9B.11 Bicycle Regulatory Signs (R9-5, R9-6, R10-4, R10-24, R10-25, and R10-26) 795
Section 9B.12 Shared-Use Path Restriction Sign (R9-7) 795
Section 9B.13 Bicycle Signal Actuation Sign (R10-22) 796
Section 9B.14 Other Regulatory Signs 796
Section 9B.15 Turn or Curve Warning Signs (W1 Series) 796
Section 9B.16 Intersection Warning Signs (W2 Series) 796
Section 9B.17 Bicycle Surface Condition Warning Sign (W8-10) 796
Section 9B.18 Bicycle Warning and Combined Bicycle/Pedestrian Signs (W11-1 and W11-15) 796
Section 9B.19 Other Bicycle Warning Signs 798
Section 9B.20 Bicycle Guide Signs (D1-1b, D1-1c, D1-2b, D1-2c, D1-3b, D1-3c, D11-1, D11-1c) 798
Section 9B.21 Bicycle Route Signs (M1-8, M1-8a, M1-9) 800
Section 9B.22 Bicycle Route Sign Auxiliary Plaques 802
Section 9B.23 Bicycle Parking Area Sign (D4-3) 804
Section 9B.24 Reference Location Signs (D10-1 through D10-3) and Intermediate Reference Location Signs (D10-1a through D10-3a) 804
Section 9B.25 Mode-Specific Guide Signs for Shared-Use Paths (D11-1a, D11-2, D11-3, D11-4) 805
Section 9B.26 Object Markers 805

CHAPTER 9C MARKINGS

Section 9C.01 Functions of Markings 806
Section 9C.02 General Principles 806
Section 9C.03 Marking Patterns and Colors on Shared-Use Paths 806
Section 9C.04 Markings For Bicycle Lanes 806
Section 9C.05 Bicycle Detector Symbol 810
Section 9C.06 Pavement Markings for Obstructions 810
Section 9C.07 Shared Lane Marking 810

CHAPTER 9D SIGNALS

Section 9D.01 Application 816
Section 9D.02 Signal Operations for Bicycles 816

APPENDIX A1. CONGRESSIONAL LEGISLATION A1-1
APPENDIX A2. METRIC CONVERSIONS A2-1

FIGURES

Page

Figure 1A-1 Process for Requesting and Conducting Experimentations for New Traffic Control Devices ... 5
Figure 1A-2 Process for Incorporating New Traffic Control Devices into the MUTCD ... 8
Figure 2A-1 Examples of Enhanced Conspicuity for Signs ... 37
Figure 2A-2 Examples of Heights and Lateral Locations of Sign Installations ... 38
Figure 2A-3 Examples of Locations for Some Typical Signs at Intersections ... 39
Figure 2A-4 Relative Locations of Regulatory, Warning, and Guide Signs on an Intersection Approach ... 40
Figure 2B-1 STOP and YIELD Signs and Plaques ... 51
Figure 2B-2 Unsignalized Pedestrian Crosswalk Signs ... 55
Figure 2B-3 Speed Limit and Photo Enforcement Signs and Plaques ... 57
Figure 2B-4 Movement Prohibition and Lane Control Signs and Plaques ... 60
Figure 2B-5 Intersection Lane Control Sign Arrow Options for Roundabouts ... 62
Figure 2B-6 Center and Reversible Lane Control Signs and Plaques ... 65
Figure 2B-7 Location of Reversible Two-Way Left-Turn Signs ... 66
Figure 2B-8 Jughandle Regulatory Signs ... 68
Figure 2B-9 Examples of Applications of Jughandle Regulatory and Guide Signing ... 69
Figure 2B-10 Passing, Keep Right, and Slow Traffic Signs ... 72
Figure 2B-11 Selective Exclusion Signs ... 75
Figure 2B-12 Locations of Wrong-Way Signing for Divided Highways with Median Widths of 30 Feet or Wider ... 76
Figure 2B-13 ONE WAY and Divided Highway Crossing Signs ... 78
Figure 2B-14 Locations of ONE WAY Signs ... 79
Figure 2B-15 ONE WAY Signing for Divided Highways with Median Widths of 30 Feet or Wider ... 80
Figure 2B-16 ONE WAY Signing for Divided Highways with Median Widths Narrower Than 30 Feet ... 81
Figure 2B-17 ONE WAY Signing for Divided Highways with Median Widths Narrower Than 30 Feet and Separated Left-Turn Lanes ... 82
Figure 2B-18 Example of Application of Regulatory Signing and Pavement Markings at an Exit Ramp Termination to Deter Wrong-Way Entry ... 83
Figure 2B-19 Example of Application of Regulatory Signing and Pavement Markings at an Entrance Ramp Terminal Where the Design Does Not Clearly Indicate the Direction of Flow ... 83
Figure 2B-20 Roundabout Signs and Plaques ... 84
Figure 2B-21 Example of Regulatory and Warning Signs for a Mini-Roundabout ... 85
Figure 2B-22 Example of Regulatory and Warning Signs for a One-Lane Roundabout ... 86
Figure 2B-23 Example of Regulatory and Warning Signs for a Two-Lane Roundabout with Consecutive Double Lefts ... 87
Figure 2B-24 Parking and Standing Signs and Plaques (R7 Series) ... 88
Figure 2B-25 Parking and Stopping Signs and Plaques (R8 Series) ... 90
Figure 2B-26 Pedestrian Signs and Plaques ... 93
Figure 2B-27 Traffic Signal Signs and Plaques ... 96
Figure 2B-28 Ramp Metering Signs ... 97
Figure 2B-29 Road Closed and Weight Limit Signs ... 98
Figure 2B-30 Truck Signs ... 99
Figure 2B-31 Headlight Use Signs ... 100
Figure 2B-32 Other Regulatory Signs and Symbols ... 101
Figure 2C-1 Horizontal Alignment Signs and Plaques ... 109
Figure 2C-2 Example of Warning Signs for a Turn ... 111
Figure 2C-3 Example of Advisory Speed Signing for an Exit Ramp ... 116
Figure 2C-4 Vertical Grade Signs and Plaques ... 117
Figure 2C-5 Miscellaneous Warning Signs ... 118

Figure 2C-6 Roadway and Weather Condition and Advance Traffic Control Signs and Plaques 121
Figure 2C-7 Reduced Speed Limit Ahead Signs 124
Figure 2C-8 Merging and Passing Signs and Plaques 125
Figure 2C-9 Intersection Warning Signs and Plaques 127
Figure 2C-10 Vehicular Traffic Warning Signs and Plaques 129
Figure 2C-11 Non-Vehicular Warning Signs 130
Figure 2C-12 Supplemental Warning Plaques 132
Figure 2C-13 Object Markers 135
Figure 2D-1 Examples of Color-Coded Destination Guide Signs 138
Figure 2D-2 Arrows for Use on Guide Signs 141
Figure 2D-3 Route Signs 143
Figure 2D-4 Route Sign Auxiliaries 145
Figure 2D-5 Advance Turn and Directional Arrow Auxiliary Signs 147
Figure 2D-6 Illustration of Directional Assemblies and Other Route Signs (for One Direction of Travel Only) 149
Figure 2D-7 Destination and Distance Signs 155
Figure 2D-8 Destination Signs for Roundabouts 158
Figure 2D-9 Examples of Guide Signs for Roundabouts 159
Figure 2D-10 Street Name and Parking Signs 162
Figure 2D-11 Example of Interchange Crossroad Signing for a One-Lane Approach 165
Figure 2D-12 Example of Minor Interchange Crossroad Signing 166
Figure 2D-13 Examples of Multi-Lane Crossroad Signing for a Diamond Interchange 167
Figure 2D-14 Examples of Multi-Lane Crossroad Signing for a Partial Cloverleaf Interchange 168
Figure 2D-15 Examples of Multi-Lane Crossroad Signing for a Cloverleaf Interchange 169
Figure 2D-16 Example of Crossroad Signing for an Entrance Ramp with a Nearby Frontage Road 170
Figure 2D-17 Example of Weigh Station Signing 173
Figure 2D-18 Examples of Community Wayfinding Guide Signs 174
Figure 2D-19 Example of a Community Wayfinding Guide Sign System Showing Direction from a Freeway or Expressway 175
Figure 2D-20 Example of a Color-Coded Community Wayfinding Guide Sign System 176
Figure 2D-21 Crossover, Truck Lane, and Slow Vehicle Signs 178
Figure 2D-22 Examples of Use of the National Scenic Byways Sign 180
Figure 2E-1 Example of Guide Sign Spreading 184
Figure 2E-2 Pull-Through Signs 184
Figure 2E-3 Overhead Arrow-per-Lane Guide Sign for a Multi-Lane Exit with an Option Lane 194
Figure 2E-4 Overhead Arrow-per-Lane Guide Signs for a Two-Lane Exit to the Right with an Option Lane 195
Figure 2E-5 Overhead Arrow-per-Lane Guide Signs for a Two-Lane Exit to the Right with an Option Lane (Through Lanes Curve to the Left) 196
Figure 2E-6 Overhead Arrow-per-Lane Guide Signs for a Split with an Option Lane 197
Figure 2E-7 Diagrammatic Guide Sign for a Multi-Lane Exit with an Option Lane 199
Figure 2E-8 Diagrammatic Guide Signs for a Two-Lane Exit to the Right with an Option Lane 200
Figure 2E-9 Diagrammatic Guide Signs for a Two-Lane Exit to the Right with an Option Lane (Through Lanes Curve to the Left) 201
Figure 2E-10 Diagrammatic Guide Signs for a Split with an Option Lane 202
Figure 2E-11 Example of Signing for a Two-Lane Intermediate or Minor Interchange Exit with an Option Lane and a Dropped Lane 204
Figure 2E-12 Example of Signing for a Two-Lane Intermediate or Minor Interchange Exit with Option and Auxiliary Lanes 205
Figure 2E-13 EXIT ONLY and LEFT Sign Panels 206
Figure 2E-14 Guide Signs for a Split with Dedicated Lanes 207
Figure 2E-15 Guide Signs for a Single-Lane Exit to the Left with a Dropped Lane 208
Figure 2E-16 Guide Signs for a Single-Lane Exit to the Right with a Dropped Lane 209
Figure 2E-17 Interstate, Off-Interstate, and U.S. Route Signs 210

Figure 2E-18 Eisenhower Interstate System Signs 211
Figure 2E-19 Example of Interchange Numbering for Mainline and Circumferential Routes 213
Figure 2E-20 Example of Interchange Numbering for Mainline, Loop, and Spur Routes 214
Figure 2E-21 Example of Interchange Numbering for Overlapping Routes 215
Figure 2E-22 Examples of Interchange Advance Guide Signs, Exit Number Plaques, and LEFT Plaque....217
Figure 2E-23 Next Exit Plaques 218
Figure 2E-24 Supplemental Guide Sign for a Multi-Exit Interchange 219
Figure 2E-25 Supplemental Guide Sign for a Park – Ride Facility 219
Figure 2E-26 Examples of Interchange Exit Direction Signs 220
Figure 2E-27 Interchange Exit Direction Sign with an Advisory Speed Panel 221
Figure 2E-28 Exit Gore Signs 222
Figure 2E-29 Post-Interchange Distance Sign 223
Figure 2E-30 Example of Using an Interchange Sequence Sign for Closely-Spaced Interchanges 224
Figure 2E-31 Interchange Sequence Sign 225
Figure 2E-32 Community Interchanges Identification Sign 225
Figure 2E-33 NEXT EXITS Sign 225
Figure 2E-34 Examples of Guide Signs for a Freeway-to-Freeway Interchange 227
Figure 2E-35 Examples of Guide Signs for a Full Cloverleaf Interchange 229
Figure 2E-36 Examples of Guide Signs for a Full Cloverleaf Interchange with Collector-Distributor Roadways 231
Figure 2E-37 Examples of Guide Signs for a Partial Cloverleaf Interchange 232
Figure 2E-38 Examples of Guide Signs for a Diamond Interchange 233
Figure 2E-39 Examples of Guide Signs for a Diamond Interchange in an Urban Area 235
Figure 2E-40 Examples of Guide Signs for a Minor Interchange 236
Figure 2F-1 Examples of ETC Account Pictographs and Use of Purple Backgrounds and Underlay Panels 239
Figure 2F-2 Toll Plaza Regulatory Signs and Plaques 240
Figure 2F-3 Toll Plaza Warning Signs and Plaques 241
Figure 2F-4 ETC Account-Only Auxiliary Signs for Use in Route Sign Assemblies 243
Figure 2F-5 Examples of Guide Signs for Entrances to Toll Highways or Ramps 245
Figure 2F-6 Examples of Guide Signs for the Entrance to a Toll Highway on which Tolls are Collected Electronically Only 246
Figure 2F-7 Examples of Guide Signs for Alternative Toll and Non-Toll Ramp Connections to a Non-Toll Highway 247
Figure 2F-8 Examples of Conventional Toll Plaza Advance Signs 248
Figure 2F-9 Examples of Toll Plaza Canopy Signs 248
Figure 2F-10 Examples of Mainline Toll Plaza Approach and Canopy Signing 250
Figure 2F-11 Examples of Guide Signs for a Mainline Toll Plaza on a Diverging Alignment from Open-Road ETC Lanes 251
Figure 2G-1 Preferential Lane Regulatory Signs and Plaques 255
Figure 2G-2 Example of Signing for an Added Continuous-Access Contiguous or Buffer-Separated HOV Lane 261
Figure 2G-3 Example of Signing for a General-Purpose Lane that Becomes a Continuous-Access Contiguous or Buffer-Separated HOV Lane 262
Figure 2G-4 Examples of Warning Signs and Plaques Applicable Only to Preferential Lanes 264
Figure 2G-5 Example of an Overhead Advance Guide Sign for a Preferential Lane Entrance 267
Figure 2G-6 Examples of Overhead or Post-Mounted Preferential Lane Entrance Direction Signs 267
Figure 2G-7 Entrance Gore Signs for Barrier-Separated Preferential Lanes 268
Figure 2G-8 Example of Signing for an Entrance to Access-Restricted HOV Lanes 269
Figure 2G-9 Example of Signing for an Intermediate Entry to a Barrier- or Buffer-Separated HOV Lane 271
Figure 2G-10 Example of Signing for the Intermediate Entry to, Egress from, and End of Access-Restricted HOV Lanes 272

Figure 2G-11 Examples of Barrier-Mounted Guide Signs for an Intermediate Egress from Preferential Lanes 273
Figure 2G-12 Examples of Guide Signs for an Intermediate Egress from a Barrier- or Buffer-Separated HOV Lane 274
Figure 2G-13 Example of Signing for a Direct Entrance Ramp to an HOV Lane from a Park-and-Ride Facility and a Local Street 275
Figure 2G-14 Exit Gore Sign for a Direct Exit from a Preferential Lane 276
Figure 2G-15 Examples of Guide Signs for Direct HOV Lane Entrance and Exit Ramps 277
Figure 2G-16 Examples of Guide Signs for a Direct Access Ramp between HOV Lanes on Separate Freeways 278
Figure 2G-17 Regulatory Signs for Managed Lanes 280
Figure 2G-18 Examples of Guide Signs for Entrances to Priced Managed Lanes 281
Figure 2G-19 Example of an Exit Destinations Sign for a Managed Lane 282
Figure 2G-20 Example of a Comparative Travel Time Information Sign for Preferential or Managed Lanes 282
Figure 2G-21 Example of Signing for the Entrance to an Access-Restricted Priced Managed Lane 283
Figure 2G-22 Example of Signing for the Entrance to an Access-Restricted Priced Managed Lane Where a General-Purpose Lane Becomes the Managed Lane 284
Figure 2G-23 Example of Signing for an Intermediate Entry to a Barrier- or Buffer-Separated Priced Managed Lane 285
Figure 2G-24 Example of Signing for the Intermediate Entry to, Egress from, and End of Access-Restricted Priced Managed Lanes 286
Figure 2G-25 Examples of Guide Signs for an Intermediate Egress from a Barrier- or Buffer-Separated HOV Lane 287
Figure 2G-26 Examples of Guide Signs for Direct Managed Lane Entrance and Exit Ramps 288
Figure 2G-27 Examples of Guide Signs for a Direct Access Ramp between Managed Lanes on Separate Freeways 289
Figure 2G-28 Examples of Guide Signs for a Direct Entrance Ramp to a Priced Managed Lane and Trailblazing to a Nearby Entrance to the General-Purpose Lanes 290
Figure 2G-29 Examples of Guide Signs for Separate Entrance Ramps to General-Purpose and Priced Managed Lanes from the Same Crossroad 291
Figure 2H-1 General Information and Miscellaneous Information Signs 293
Figure 2H-2 Reference Location Signs 295
Figure 2H-3 Intermediate Reference Location Signs 295
Figure 2H-4 Enhanced Reference Location Signs 296
Figure 2H-5 Examples of Acknowledgment Sign Designs 298
Figure 2I-1 General Service Signs and Plaques 301
Figure 2I-2 Example of Next Services Plaque 302
Figure 2I-3 Examples of General Service Signs with and without Exit Numbering 304
Figure 2I-4 Examples of Interstate Oasis Signs and Plaques 306
Figure 2I-5 Rest Area and Other Roadside Area Signs 307
Figure 2I-6 Brake Check Area and Chain-Up Area Signs 308
Figure 2I-7 Examples of Tourist Information and Welcome Center Signs 309
Figure 2I-8 Radio, Telephone, and Carpool Information Signs 310
Figure 2J-1 Examples of Specific Service Signs 314
Figure 2J-2 Examples of Specific Service Sign Locations 315
Figure 2J-3 Examples of Supplemental Messages on Logo Sign Panels 316
Figure 2J-4 Examples of RV Access Supplemental Messages on Logo Sign Panels 316
Figure 2J-5 Examples of Specific Service Trailblazer Signs 319
Figure 2K-1 Examples of Tourist-Oriented Directional Signs 321
Figure 2K-2 Examples of Intersection Approach Signs and Advance Signs for Tourist-Oriented Directional Signs 322
Figure 2M-1 Examples of Use of Arrows, Educational Plaques, and Prohibitory Slashes 333

Figure 2M-2 Examples of Recreational and Cultural Interest Area Guide Signs 334
Figure 2M-3 Arrangement, Height, and Lateral Position of Signs Located Within Recreational and Cultural Interest Areas 335
Figure 2M-4 Examples of Symbol and Destination Guide Signing Layout 336
Figure 2M-5 Recreational and Cultural Interest Area Symbol Signs for General Applications 337
Figure 2M-6 Recreational and Cultural Interest Area Symbol Signs for Accommodations 338
Figure 2M-7 Recreational and Cultural Interest Area Symbol Signs for Services 338
Figure 2M-8 Recreational and Cultural Interest Area Symbol Signs for Land Recreation 339
Figure 2M-9 Recreational and Cultural Interest Area Symbol Signs for Water Recreation 340
Figure 2M-10 Recreational and Cultural Interest Area Symbol Signs for Winter Recreation 341
Figure 2N-1 Emergency Management Signs 343
Figure 3B-1 Examples of Two-Lane, Two-Way Marking Applications 350
Figure 3B-2 Examples of Four-or-More Lane, Two-Way Marking Applications 351
Figure 3B-3 Examples of Three-Lane, Two-Way Marking Applications 352
Figure 3B-4 Method of Locating and Determining the Limits of No-Passing Zones at Curves 353
Figure 3B-5 Example of Application of Three-Lane, Two-Way Marking for Changing Direction of the Center Lane 355
Figure 3B-6 Example of Reversible Lane Marking Application 356
Figure 3B-7 Example of Two-Way Left-Turn Lane Marking Applications 357
Figure 3B-8 Examples of Dotted Line and Channelizing Line Applications for Exit Ramp Markings 358
Figure 3B-9 Examples of Dotted Line and Channelizing Line Applications for Entrance Ramp Markings 360
Figure 3B-10 Examples of Applications of Freeway and Expressway Lane-Drop Markings 363
Figure 3B-11 Examples of Applications of Conventional Road Lane-Drop Markings 368
Figure 3B-12 Example of Solid Double White Lines Used to Prohibit Lane Changing 370
Figure 3B-13 Examples of Line Extensions through Intersections 372
Figure 3B-14 Examples of Applications of Lane-Reduction Transition Markings 375
Figure 3B-15 Examples of Applications of Markings for Obstructions in the Roadway 377
Figure 3B-16 Recommended Yield Line Layouts 382
Figure 3B-17 Examples of Yield Lines at Unsignalized Midblock Crosswalks 383
Figure 3B-18 Do Not Block Intersection Markings 384
Figure 3B-19 Examples of Crosswalk Markings 384
Figure 3B-20 Example of Crosswalk Markings for an Exclusive Pedestrian Phase that Permits Diagonal Crossing 385
Figure 3B-21 Examples of Parking Space Markings 386
Figure 3B-22 International Symbol of Accessibility Parking Space Marking 387
Figure 3B-23 Example of Elongated Letters for Word Pavement Markings 387
Figure 3B-24 Examples of Standard Arrows for Pavement Markings 388
Figure 3B-25 Examples of Elongated Route Shields for Pavement Markings 390
Figure 3B-26 Yield Ahead Triangle Symbols 391
Figure 3B-27 Examples of Lane-Use Control Word and Arrow Pavement Markings 392
Figure 3B-28 Example of the Application of Speed Reduction Markings 394
Figure 3B-29 Pavement Markings for Speed Humps without Crosswalks 396
Figure 3B-30 Pavement Markings for Speed Tables or Speed Humps with Crosswalks 397
Figure 3B-31 Advance Warning Markings for Speed Humps 398
Figure 3C-1 Example of Markings for Approach and Circulatory Roadways at a Roundabout 399
Figure 3C-2 Lane-Use Arrow Pavement Marking Options for Roundabout Approaches 400
Figure 3C-3 Example of Markings for a One-Lane Roundabout 400
Figure 3C-4 Example of Markings for a Two-Lane Roundabout with One- and Two-Lane Approaches 401
Figure 3C-5 Example of Markings for a Two-Lane Roundabout with One-Lane Exits 403
Figure 3C-6 Example of Markings for a Two-Lane Roundabout with Two-Lane Exits 404
Figure 3C-7 Example of Markings for a Two-Lane Roundabout with a Double Left Turn 405
Figure 3C-8 Example of Markings for a Two-Lane Roundabout with a Double Right Turn 406
Figure 3C-9 Example of Markings for a Two-Lane Roundabout with Consecutive Double Lefts 407

Figure 3C-10 Example of Markings for a Three-Lane Roundabout with Two- and Three-Lane Approaches 408
Figure 3C-11 Example of Markings for a Three-Lane Roundabout with Three-Lane Approaches 409
Figure 3C-12 Example of Markings for a Three-Lane Roundabout with Two-Lane Exits 410
Figure 3C-13 Example of Markings for Two Linked Roundabouts 411
Figure 3C-14 Example of Markings for a Diamond Interchange with Two Circular-Shaped Roundabout Ramp Terminals 412
Figure 3D-1 Markings for Barrier-Separated Preferential Lanes 418
Figure 3D-2 Markings for Buffer-Separated Preferential Lanes 418
Figure 3D-3 Markings for Contiguous Preferential Lanes 420
Figure 3D-4 Markings for Counter-Flow Preferential Lanes on Divided Highways 422
Figure 3F-1 Examples of Delineator Placement 425
Figure 3J-1 Examples of Longitudinal Rumble Strip Markings 432
Figure 4C-1 Warrant 2, Four-Hour Vehicular Volume 440
Figure 4C-2 Warrant 2, Four-Hour Vehicular Volume (70% Factor) 440
Figure 4C-3 Warrant 3, Peak Hour 441
Figure 4C-4 Warrant 3, Peak Hour (70% Factor) 441
Figure 4C-5 Warrant 4, Pedestrian Four-Hour Volume 443
Figure 4C-6 Warrant 4, Pedestrian Four-Hour Volume (70% Factor) 443
Figure 4C-7 Warrant 4, Pedestrian Peak Hour 444
Figure 4C-8 Warrant 4, Pedestrian Peak Hour (70% Factor) 444
Figure 4C-9 Warrant 9, Intersection Near a Grade Crossing (One Approach Lane at the Track Crossing) 447
Figure 4C-10 Warrant 9, Intersection Near a Grade Crossing (Two or More Approach Lanes at the Track Crossing) 447
Figure 4D-1 Example of U-Turn Signal Face 456
Figure 4D-2 Typical Arrangements of Signal Sections in Signal Faces That Do Not Control Turning Movements 458
Figure 4D-3 Recommended Vehicular Signal Faces for Approaches with Posted, Statutory, or 85th-Percentile Speed of 45 mph or Higher 460
Figure 4D-4 Lateral and Longitudinal Location of Primary Signal Faces 463
Figure 4D-5 Maximum Mounting Height of Signal Faces Located Between 40 Feet and 53 Feet from Stop Line 465
Figure 4D-6 Typical Position and Arrangements of Shared Signal Faces for Permissive Only Mode Left Turns 467
Figure 4D-7 Typical Position and Arrangements of Separate Signal Faces with Flashing Yellow Arrow for Permissive Only Mode Left Turns 468
Figure 4D-8 Typical Position and Arrangements of Separate Signal Faces with Flashing Red Arrow for Permissive Only Mode and Protected/Permissive Mode Left Turns 469
Figure 4D-9 Typical Positions and Arrangements of Shared Signal Faces for Protected Only Mode Left Turns 470
Figure 4D-10 Typical Position and Arrangements of Separate Signal Faces for Protected Only Mode Left Turns 471
Figure 4D-11 Typical Position and Arrangements of Shared Signal Faces for Protected/Permissive Mode Left Turns 472
Figure 4D-12 Typical Position and Arrangements of Separate Signal Faces with Flashing Yellow Arrow for Protected/Permissive Mode and Protected Only Mode Left Turns 473
Figure 4D-13 Typical Positions and Arrangements of Shared Signal Faces for Permissive Only Mode Right Turns 476
Figure 4D-14 Typical Position and Arrangements of Separate Signal Faces with Flashing Yellow Arrow for Permissive Only Mode Right Turns 477
Figure 4D-15 Typical Position and Arrangements of Separate Signal Faces with Flashing Red Arrow for Permissive Only Mode and Protected/Permissive Mode Right Turns 478

Figure 4D-16 Typical Positions and Arrangements of Shared Signal Faces for Protected Only Mode Right Turns 479
Figure 4D-17 Typical Position and Arrangements of Separate Signal Faces for Protected Only Mode Right Turns 480
Figure 4D-18 Typical Positions and Arrangements of Shared Signal Faces for Protected/Permissive Mode Right Turns 481
Figure 4D-19 Typical Position and Arrangements of Separate Signal Faces with Flashing Yellow Arrow for Protected/Permissive Mode and Protected Only Mode Right Turns 482
Figure 4D-20 Signal Indications for Approaches with a Shared Left-Turn/Right-Turn Lane and No Through Movement 486
Figure 4E-1 Typical Pedestrian Signal Indications 496
Figure 4E-2 Pedestrian Intervals 498
Figure 4E-3 Pushbutton Location Area 501
Figure 4E-4 Typical Pushbutton Locations 502
Figure 4F-1 Guidelines for the Installation of Pedestrian Hybrid Beacons on Low-Speed Roadways 510
Figure 4F-2 Guidelines for the Installation of Pedestrian Hybrid Beacons on High-Speed Roadways 510
Figure 4F-3 Sequence for a Pedestrian Hybrid Beacon 511
Figure 4G-1 Sequence for an Emergency-Vehicle Hybrid Beacon 515
Figure 4M-1 Left-Turn Lane-Use Control Signals 526
Figure 5B-1 Regulatory Signs on Low-Volume Roads 534
Figure 5B-2 Parking Signs and Plaques on Low-Volume Roads 535
Figure 5C-1 Horizontal Alignment and Intersection Warning Signs and Plaques and Object Markers on Low-Volume Roads 536
Figure 5C-2 Other Warning Signs and Plaques on Low-Volume Roads 538
Figure 5F-1 Highway-Rail Grade Crossing Signs and Plaques for Low-Volume Roads 542
Figure 5G-1 Temporary Traffic Control Signs and Plaques on Low-Volume Roads 545
Figure 6C-1 Component Parts of a Temporary Traffic Control Zone 553
Figure 6C-2 Types of Tapers and Buffer Spaces 556
Figure 6C-3 Example of a One-Lane, Two-Way Traffic Taper 559
Figure 6E-1 Example of the Use of a STOP/SLOW Automated Flagger Assistance Device (AFAD) 570
Figure 6E-2 Example of the Use of a Red/Yellow Lens Automated Flagger Assistance Device (AFAD) 572
Figure 6E-3 Use of Hand-Signaling Devices by Flaggers 574
Figure 6F-1 Height and Lateral Location of Signs—Typical Installations 581
Figure 6F-2 Methods of Mounting Signs Other Than on Posts 582
Figure 6F-3 Regulatory Signs and Plaques in Temporary Traffic Control Zones 584
Figure 6F-4 Warning Signs and Plaques in Temporary Traffic Control Zones 588
Figure 6F-5 Exit Open and Closed and Detour Signs 592
Figure 6F-6 Advance Warning Arrow Board Display Specifications 602
Figure 6F-7 Channelizing Devices 605
Figure 6H-1 Work Beyond the Shoulder (TA-1) 635
Figure 6H-2 Blasting Zone (TA-2) 637
Figure 6H-3 Work on the Shoulders (TA-3) 639
Figure 6H-4 Short-Duration or Mobile Operation on a Shoulder (TA-4) 641
Figure 6H-5 Shoulder Closure on a Freeway (TA-5) 643
Figure 6H-6 Shoulder Work with Minor Encroachment (TA-6) 645
Figure 6H-7 Road Closure with a Diversion (TA-7) 647
Figure 6H-8 Road Closure with an Off-Site Detour (TA-8) 649
Figure 6H-9 Overlapping Routes with a Detour (TA-9) 651
Figure 6H-10 Lane Closure on a Two-Lane Road Using Flaggers (TA-10) 653
Figure 6H-11 Lane Closure on a Two-Lane Road with Low Traffic Volumes (TA-11) 655
Figure 6H-12 Lane Closure on a Two-Lane Road Using Traffic Control Signals (TA-12) 657
Figure 6H-13 Temporary Road Closure (TA-13) 659
Figure 6H-14 Haul Road Crossing (TA-14) 661
Figure 6H-15 Work in the Center of a Road with Low Traffic Volumes (TA-15) 663

Figure 6H-16 Surveying Along the Center Line of a Road with Low Traffic Volumes (TA-16) 665
Figure 6H-17 Mobile Operations on a Two-Lane Road (TA-17) 667
Figure 6H-18 Lane Closure on a Minor Street (TA-18) 669
Figure 6H-19 Detour for One Travel Direction (TA-19) 671
Figure 6H-20 Detour for a Closed Street (TA-20) 673
Figure 6H-21 Lane Closure on the Near Side of an Intersection (TA-21) 675
Figure 6H-22 Right-Hand Lane Closure on the Far Side of an Intersection (TA-22) 677
Figure 6H-23 Left-Hand Lane Closure on the Far Side of an Intersection (TA-23) 679
Figure 6H-24 Half Road Closure on the Far Side of an Intersection (TA-24) 681
Figure 6H-25 Multiple Lane Closures at an Intersection (TA-25) 683
Figure 6H-26 Closure in the Center of an Intersection (TA-26) 685
Figure 6H-27 Closure at the Side of an Intersection (TA-27) 687
Figure 6H-28 Sidewalk Detour or Diversion (TA-28) 689
Figure 6H-29 Crosswalk Closures and Pedestrian Detours (TA-29) 691
Figure 6H-30 Interior Lane Closure on a Multi-Lane Street (TA-30) 693
Figure 6H-31 Lane Closures on a Street with Uneven Directional Volumes (TA-31) 695
Figure 6H-32 Half Road Closure on a Multi-Lane, High-Speed Highway (TA-32) 697
Figure 6H-33 Stationary Lane Closure on a Divided Highway (TA-33) 699
Figure 6H-34 Lane Closure with a Temporary Traffic Barrier (TA-34) 701
Figure 6H-35 Mobile Operation on a Multi-Lane Road (TA-35) 703
Figure 6H-36 Lane Shift on a Freeway (TA-36) 705
Figure 6H-37 Double Lane Closure on a Freeway (TA-37) 707
Figure 6H-38 Interior Lane Closure on a Freeway (TA-38) 709
Figure 6H-39 Median Crossover on a Freeway (TA-39) 711
Figure 6H-40 Median Crossover for an Entrance Ramp (TA-40) 713
Figure 6H-41 Median Crossover for an Exit Ramp (TA-41) 715
Figure 6H-42 Work in the Vicinity of an Exit Ramp (TA-42) 717
Figure 6H-43 Partial Exit Ramp Closure (TA-43) 719
Figure 6H-44 Work in the Vicinity of an Entrance Ramp (TA-44) 721
Figure 6H-45 Temporary Reversible Lane Using Movable Barriers (TA-45) 723
Figure 6H-46 Work in the Vicinity of a Grade Crossing (TA-46) 725
Figure 6I-1 Examples of Traffic Incident Management Area Signs 727
Figure 7A-1 Example of School Route Plan Map 732
Figure 7B-1 School Area Signs 735
Figure 7B-2 Example of Signing for a Higher Fines School Zone without a School Crossing 737
Figure 7B-3 Example of Signing for a Higher Fines School Zone with a School Speed Limit 738
Figure 7B-4 Example of Signing for a School Crossing Outside of a School Zone 739
Figure 7B-5 Example of Signing for a School Zone with a School Speed Limit and a School Crossing .. 740
Figure 7B-6 In-Street Signs in School Areas 741
Figure 7C-1 Two-Lane Pavement Marking of “SCHOOL” 744
Figure 8B-1 Regulatory Signs and Plaques for Grade Crossings 753
Figure 8B-2 Crossbuck Assembly with a YIELD or STOP Sign on the Crossbuck Sign Support 754
Figure 8B-3 Crossbuck Assembly with a YIELD or STOP Sign on a Separate Sign Support 755
Figure 8B-4 Warning Signs and Plaques for Grade Crossings 759
Figure 8B-5 Example of an Emergency Notification Sign 762
Figure 8B-6 Example of Placement of Warning Signs and Pavement Markings at Grade Crossings 765
Figure 8B-7 Grade Crossing Pavement Markings 766
Figure 8B-8 Example of Dynamic Envelope Pavement Markings at Grade Crossings 767
Figure 8B-9 Examples of Light Rail Transit Vehicle Dynamic Envelope Markings for Mixed-Use Alignments 768
Figure 8C-1 Composite Drawing of Active Traffic Control Devices for Grade Crossings Showing Clearances 770
Figure 8C-2 Example of Location Plan for Flashing-Light Signals and Four-Quadrant Gates 774
Figure 8C-3 Light Rail Transit Signals 779

Figure 8C-4 Example of Flashing-Light Signal Assembly for Pedestrian Crossings 781
Figure 8C-5 Example of a Shared Pedestrian/Roadway Gate 782
Figure 8C-6 Example of a Separate Pedestrian Gate 782
Figure 8C-7 Examples of Placement of Pedestrian Gates 783
Figure 8C-8 Example of Swing Gates 784
Figure 8C-9 Example of Pedestrian Barriers at an Offset Grade Crossing 784
Figure 8C-10 Examples of Pedestrian Barrier Installation at an Offset Non-Intersection Grade Crossing... 785
Figure 8D-1 Example of Signing and Markings for a Pathway Grade Crossing 787
Figure 9B-1 Sign Placement on Shared-Use Paths 790
Figure 9B-2 Regulatory Signs and Plaques for Bicycle Facilities 793
Figure 9B-3 Warning Signs and Plaques and Object Markers for Bicycle Facilities 797
Figure 9B-4 Guide Signs and Plaques for Bicycle Facilities 799
Figure 9B-5 Example of Signing for the Beginning and End of a Designated Bicycle Route on a Shared-Use Path 801
Figure 9B-6 Example of Bicycle Guide Signing 802
Figure 9B-7 Examples of Signing and Markings for a Shared-Use Path Crossing 803
Figure 9B-8 Example of Mode-Specific Guide Signing on a Shared-Use Path 805
Figure 9C-1 Example of Intersection Pavement Markings—Designated Bicycle Lane with Left-Turn Area, Heavy Turn Volumes, Parking, One-Way Traffic, or Divided Highway 807
Figure 9C-2 Examples of Center Line Markings for Shared-Use Paths 808
Figure 9C-3 Word, Symbol, and Arrow Pavement Markings for Bicycle Lanes 809
Figure 9C-4 Example of Bicycle Lane Treatment at a Right Turn Only Lane 811
Figure 9C-5 Example of Bicycle Lane Treatment at Parking Lane into a Right Turn Only Lane 812
Figure 9C-6 Example of Pavement Markings for Bicycle Lanes on a Two-Way Street 813
Figure 9C-7 Bicycle Detector Pavement Marking 814
Figure 9C-8 Examples of Obstruction Pavement Markings 815
Figure 9C-9 Shared Lane Marking 815

TABLES

Page

Table I-1 Evolution of the MUTCD I-2
Table I-2 Target Compliance Dates Established by the FHWA I-4
Table 1A-1 Acceptable Abbreviations 24
Table 1A-2 Abbreviations that Shall be Used Only on Portable Changeable Message Signs 25
Table 1A-3 Unacceptable Abbreviations 26
Table 2A-1 Illumination of Sign Elements 29
Table 2A-2 Retroreflection of Sign Elements 29
Table 2A-3 Minimum Maintained Retroreflectivity Levels 31
Table 2A-4 Use of Sign Shapes 32
Table 2A-5 Common Uses of Sign Colors 33
Table 2B-1 Regulatory Sign and Plaque Sizes 46
Table 2B-2 Meanings of Symbols and Legends on Reversible Lane Control Signs 65
Table 2C-1 Categories of Warning Signs and Plaques 104
Table 2C-2 Warning Sign and Plaque Sizes 105
Table 2C-3 Minimum Size of Supplemental Warning Plaques 107
Table 2C-4 Guidelines for Advance Placement of Warning Signs 108
Table 2C-5 Horizontal Alignment Sign Selection 110
Table 2C-6 Approximate Spacing of Chevron Alignment Signs on Horizontal Curves 113
Table 2D-1 Conventional Road Guide Sign Sizes 139
Table 2D-2 Recommended Minimum Letter Heights on Street Name Signs 163
Table 2E-1 Freeway or Expressway Guide Sign and Plaque Sizes 186

Table 2E-2 Minimum Letter and Numeral Sizes for Expressway Guide Signs According to Interchange Classification 188
Table 2E-3 Minimum Letter and Numeral Sizes for Expressway Guide Signs According to Sign Type .. 189
Table 2E-4 Minimum Letter and Numeral Sizes for Freeway Guide Signs According to Interchange Classification 190
Table 2E-5 Minimum Letter and Numeral Sizes for Freeway Guide Signs According to Sign Type 191
Table 2F-1 Toll Facility Sign and Plaque Minimum Sizes 237
Table 2G-1 Managed and Preferential Lanes Sign and Plaque Minimum Sizes 254
Table 2H-1 General Information Sign Sizes 292
Table 2I-1 General Service Sign and Plaque Sizes 299
Table 2J-1 Minimum Letter and Numeral Sizes for Specific Service Signs According to Sign Type 316
Table 2L-1 Example of Units of Information 328
Table 2M-1 Category Chart for Recreational and Cultural Interest Area Symbols 331
Table 2N-1 Emergency Management Sign Sizes 343
Table 3B-1 Minimum Passing Sight Distances for No-Passing Zone Markings 352
Table 3D-1 Standard Edge Line and Lane Line Markings for Preferential Lanes 417
Table 3F-1 Approximate Spacing for Delineators on Horizontal Curves 427
Table 4C-1 Warrant 1, Eight-Hour Vehicular Volume 438
Table 4C-2 Warrant 9, Adjustment Factor for Daily Frequency of Rail Traffic 448
Table 4C-3 Warrant 9, Adjustment Factor for Percentage of High-Occupancy Buses 448
Table 4C-4 Warrant 9, Adjustment Factor for Percentage of Tractor-Trailer Trucks 448
Table 4D-1 Recommended Minimum Number of Primary Signal Faces for Through Traffic on Approaches with Posted, Statutory, or 85th-Percentile Speed of 45 mph or Higher 461
Table 4D-2 Minimum Sight Distance for Signal Visibility 461
Table 5A-1 Sign and Plaque Sizes on Low-Volume Roads 532
Table 6C-1 Recommended Advance Warning Sign Minimum Spacing 554
Table 6C-2 Stopping Sight Distance as a Function of Speed 555
Table 6C-3 Taper Length Criteria for Temporary Traffic Control Zones 557
Table 6C-4 Formulas for Determining Taper Length 557
Table 6E-1 Stopping Sight Distance as a Function of Speed 575
Table 6F-1 Temporary Traffic Control Zone Sign and Plaque Sizes 578
Table 6H-1 Index to Typical Applications 632
Table 6H-2 Meaning of Symbols on Typical Application Diagrams 633
Table 6H-3 Meaning of Letter Codes on Typical Application Diagrams 633
Table 6H-4 Formulas for Determining Taper Length 633
Table 7B-1 School Area Sign and Plaque Sizes 733
Table 8B-1 Grade Crossing Sign and Plaque Minimum Sizes 752
Table 9B-1 Bicycle Facility Sign and Plaque Minimum Sizes 791
Table A2-1 Conversion of Inches to Millimeters A2-1
Table A2-2 Conversion of Feet to Meters A2-1
Table A2-3 Conversion of Miles to Kilometers A2-1
Table A2-4 Conversion of Miles per Hour to Kilometers/Hour A2-1

MANUAL ON UNIFORM TRAFFIC CONTROL DEVICES
INTRODUCTION

Standard:

01 **Traffic control devices shall be defined as all signs, signals, markings, and other devices used to regulate, warn, or guide traffic, placed on, over, or adjacent to a street, highway, pedestrian facility, bikeway, or private road open to public travel (see definition in Section 1A.13) by authority of a public agency or official having jurisdiction, or, in the case of a private road, by authority of the private owner or private official having jurisdiction.**

02 **The Manual on Uniform Traffic Control Devices (MUTCD) is incorporated by reference in 23 Code of Federal Regulations (CFR), Part 655, Subpart F and shall be recognized as the national standard for all traffic control devices installed on any street, highway, bikeway, or private road open to public travel (see definition in Section 1A.13) in accordance with 23 U.S.C. 109(d) and 402(a). The policies and procedures of the Federal Highway Administration (FHWA) to obtain basic uniformity of traffic control devices shall be as described in 23 CFR 655, Subpart F.**

03 **In accordance with 23 CFR 655.603(a), for the purposes of applicability of the MUTCD:**

A. Toll roads under the jurisdiction of public agencies or authorities or public-private partnerships shall be considered to be public highways;
B. Private roads open to public travel shall be as defined in Section 1A.13; and
C. Parking areas, including the driving aisles within those parking areas, that are either publicly or privately owned shall not be considered to be "open to public travel" for purposes of MUTCD applicability.

04 **Any traffic control device design or application provision contained in this Manual shall be considered to be in the public domain. Traffic control devices contained in this Manual shall not be protected by a patent, trademark, or copyright, except for the Interstate Shield and any items owned by FHWA.**

Support:

05 Pictographs, as defined in Section 1A.13, are embedded in traffic control devices but the pictographs themselves are not considered traffic control devices for the purposes of Paragraph 4.

06 The need for uniform standards was recognized long ago. The American Association of State Highway Officials (AASHO), now known as the American Association of State Highway and Transportation Officials (AASHTO), published a manual for rural highways in 1927, and the National Conference on Street and Highway Safety (NCSHS) published a manual for urban streets in 1930. In the early years, the necessity for unification of the standards applicable to the different classes of road and street systems was obvious. To meet this need, a joint committee of AASHO and NCSHS developed and published the original edition of this Manual on Uniform Traffic Control Devices (MUTCD) in 1935. That committee, now called the National Committee on Uniform Traffic Control Devices (NCUTCD), though changed from time to time in name, organization, and personnel, has been in continuous existence and has contributed to periodic revisions of this Manual. The FHWA has administered the MUTCD since the 1971 edition. The FHWA and its predecessor organizations have participated in the development and publishing of the previous editions. There were nine previous editions of the MUTCD, and several of those editions were revised one or more times. Table I-1 traces the evolution of the MUTCD, including the two manuals developed by AASHO and NCSHS.

Standard:

07 **The U.S. Secretary of Transportation, under authority granted by the Highway Safety Act of 1966, decreed that traffic control devices on all streets and highways open to public travel in accordance with 23 U.S.C. 109(d) and 402(a) in each State shall be in substantial conformance with the Standards issued or endorsed by the FHWA.**

Support:

08 The "Uniform Vehicle Code (UVC)" is one of the publications referenced in the MUTCD. The UVC contains a model set of motor vehicle codes and traffic laws for use throughout the United States.

Guidance:

09 *The States should adopt Section 15-116 of the UVC, which states that, "No person shall install or maintain in any area of private property used by the public any sign, signal, marking, or other device intended to regulate, warn, or guide traffic unless it conforms with the State manual and specifications adopted under Section 15-104."*

Table I-1. Evolution of the MUTCD

Year	Name	Month / Year Revised
1927	Manual and Specifications for the Manufacture, Display, and Erection of U.S. Standard Road Markers and Signs (for rural roads)	4/29, 12/31
1930	Manual on Street Traffic Signs, Signals, and Markings (for urban streets)	No revisions
1935	Manual on Uniform Traffic Control Devices for Streets and Highways (MUTCD)	2/39
1942	Manual on Uniform Traffic Control Devices for Streets and Highways — War Emergency Edition	No revisions
1948	Manual on Uniform Traffic Control Devices for Streets and Highways	9/54
1961	Manual on Uniform Traffic Control Devices for Streets and Highways	No revisions
1971	Manual on Uniform Traffic Control Devices for Streets and Highways	11/71, 4/72, 3/73, 10/73, 6/74, 6/75, 9/76, 12/77
1978	Manual on Uniform Traffic Control Devices for Streets and Highways	12/79, 12/83, 9/84, 3/86
1988	Manual on Uniform Traffic Control Devices for Streets and Highways	1/90, 3/92, 9/93, 11/94, 12/96, 6/98, 1/00
2000	Manual on Uniform Traffic Control Devices for Streets and Highways — Millennium Edition	7/02
2003	Manual on Uniform Traffic Control Devices for Streets and Highways	11/04, 12/07
2009	Manual on Uniform Traffic Control Devices for Streets and Highways	

Support:

10 The Standard, Guidance, Option, and Support material described in this edition of the MUTCD provide the transportation professional with the information needed to make appropriate decisions regarding the use of traffic control devices on streets, highways, bikeways, and private roads open to public travel (see definition in Section 1A.13).

11 Throughout this Manual the headings Standard, Guidance, Option, and Support are used to classify the nature of the text that follows. Figures and tables, including the notes contained therein, supplement the text and might constitute a Standard, Guidance, Option, or Support. The user needs to refer to the appropriate text to classify the nature of the figure, table, or note contained therein.

Standard:

12 **When used in this Manual, the text headings of Standard, Guidance, Option, and Support shall be as defined in Paragraph 1 of Section 1A.13.**

Support:

13 Throughout this Manual all dimensions and distances are provided in English units. Appendix A2 contains tables for converting each of the English unit numerical values that are used in this Manual to the equivalent Metric (International System of Units) values.

Guidance:

14 *If Metric units are to be used in laying out distances or determining sizes of devices, such units should be specified on plan drawings and made known to those responsible for designing, installing, or maintaining traffic control devices.*

15 *Except when a specific numeral is required or recommended by the text of a Section of this Manual, numerals displayed on the images of devices in the figures that specify quantities such as times, distances, speed limits, and weights should be regarded as examples only. When installing any of these devices, the numerals should be appropriately altered to fit the specific situation.*

Support:

16 The following information will be useful when reference is being made to a specific portion of text in this Manual.

17 There are nine Parts in this Manual and each Part is comprised of one or more Chapters. Each Chapter is comprised of one or more Sections. Parts are given a numerical identification, such as Part 2 – Signs. Chapters are identified by the Part number and a letter, such as Chapter 2B – Regulatory Signs, Barricades, and Gates. Sections are identified by the Chapter number and letter followed by a decimal point and a number, such as Section 2B.03 – Size of Regulatory Signs.

39. "Guidelines for Accessible Pedestrian Signals (NCHRP Web-Only Document 117B)," 2008 Edition (TRB)
40. "Highway Capacity Manual," 2000 Edition (TRB)
41. "Recommended Procedures for the Safety Performance Evaluation of Highway Features," (NCHRP Report 350), 1993 Edition (TRB)
42. "The Americans with Disabilities Act Accessibility Guidelines for Buildings and Facilities (ADAAG)," July 1998 Edition (The U.S. Access Board)

Section 1A.12 Color Code

Support:

01 The following color code establishes general meanings for 11 colors of a total of 13 colors that have been identified as being appropriate for use in conveying traffic control information. tolerance limits for each color are contained in 23 CFR Part 655, Appendix to Subpart F and are available at the Federal Highway Administration's MUTCD website at http://mutcd.fhwa.dot.gov or by writing to the FHWA, Office of Safety Research and Development (HRD-T-301), 6300 Georgetown Pike, McLean, VA 22101.

02 The two colors for which general meanings have not yet been assigned are being reserved for future applications that will be determined only by FHWA after consultation with the States, the engineering community, and the general public. The meanings described in this Section are of a general nature. More specific assignments of colors are given in the individual Parts of this Manual relating to each class of devices.

Standard:

03 **The general meaning of the 13 colors shall be as follows:**

A. Black—regulation
B. Blue—road user services guidance, tourist information, and evacuation route
C. Brown—recreational and cultural interest area guidance
D. Coral—unassigned
E. Fluorescent Pink—incident management
F. Fluorescent Yellow-Green—pedestrian warning, bicycle warning, playground warning, school bus and school warning
G. Green—indicated movements permitted, direction guidance
H. Light Blue—unassigned
I. Orange—temporary traffic control
J. Purple—lanes restricted to use only by vehicles with registered electronic toll collection (ETC) accounts
K. Red—stop or prohibition
L. White—regulation
M. Yellow—warning

Section 1A.13 Definitions of Headings, Words, and Phrases in this Manual

Standard:

01 **When used in this Manual, the text headings of Standard, Guidance, Option, and Support shall be defined as follows:**

Rev. 1

A. Standard—a statement of required, mandatory, or specifically prohibitive practice regarding a traffic control device. All Standard statements are labeled, and the text appears in bold type. The verb "shall" is typically used. The verbs "should" and "may" are not used in Standard statements. Standard statements are sometimes modified by Options.

B. Guidance—a statement of recommended, but not mandatory, practice in typical situations, with deviations allowed if engineering judgment or engineering study indicates the deviation to be appropriate. All Guidance statements are labeled, and the text appears in unbold type. The verb "should" is typically used. The verbs "shall" and "may" are not used in Guidance statements. Guidance statements are sometimes modified by Options.

C. Option—a statement of practice that is a permissive condition and carries no requirement or recommendation. Option statements sometime contain allowable modifications to a Standard or Guidance statement. All Option statements are labeled, and the text appears in unbold type. The verb "may" is typically used. The verbs "shall" and "should" are not used in Option statements.

D. Support—an informational statement that does not convey any degree of mandate, recommendation, authorization, prohibition, or enforceable condition. Support statements are labeled, and the text appears in unbold type. The verbs "shall," "should," and "may" are not used in Support statements.

Exhibit 13 to MDOT's MSJ

Manual on Uniform Traffic Control Devices

2011 Michigan MUTCD
2009 Federal Edition

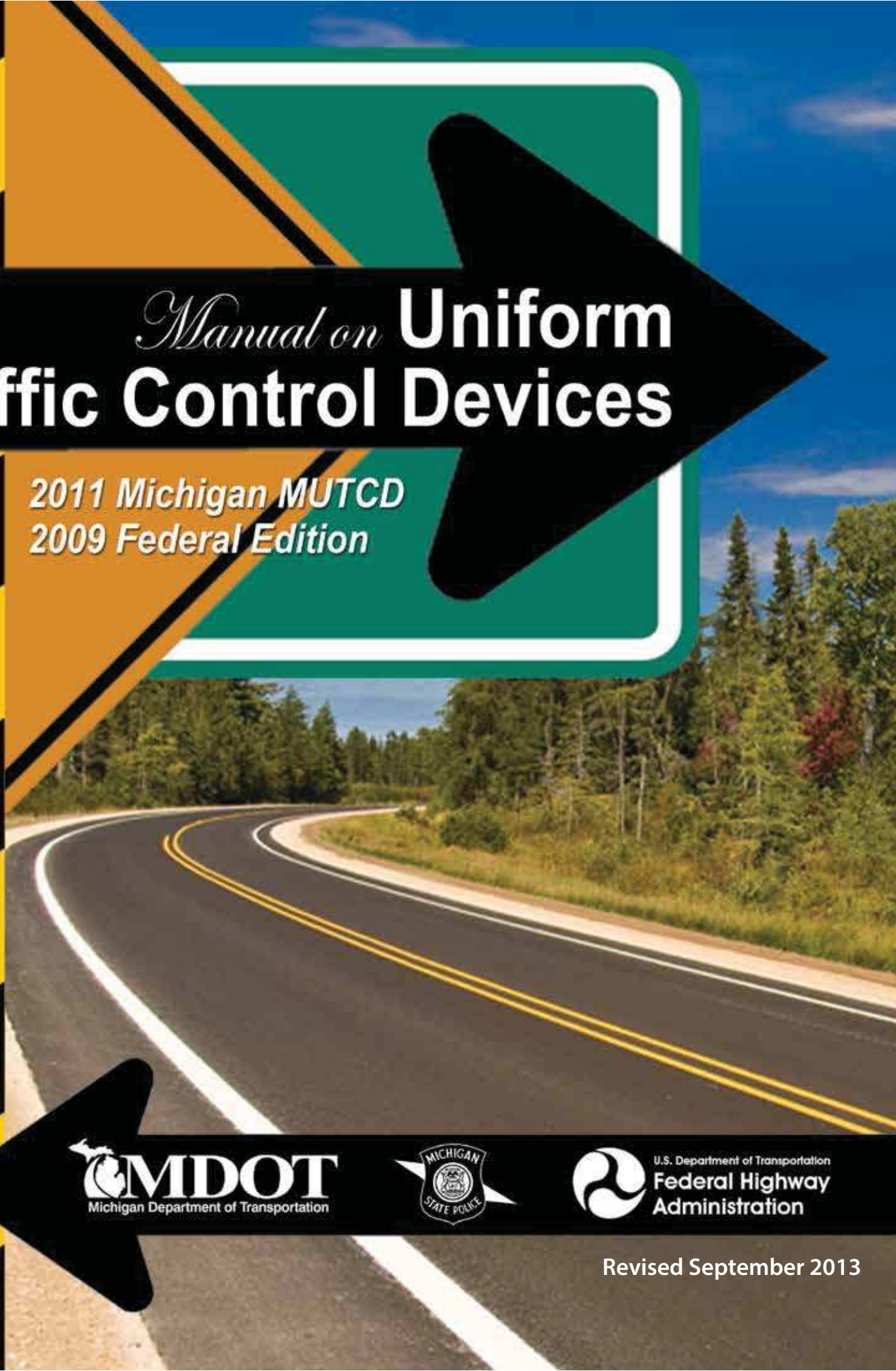

MDOT
Michigan Department of Transportation

MICHIGAN STATE POLICE

U.S. Department of Transportation
Federal Highway Administration

Revised September 2013

LEAVE BLANK PAGE

The Manual on Uniform Traffic Control Devices (MUTCD) is approved by the Federal Highway Administrator as the National Standard in accordance with Title 23 U.S. Code, Sections 109(d), 114(a), 217, 315, and 402(a), 23 CFR 655, and 49 CFR 1.48(b)(8), 1.48(b)(33), and 1.48(c)(2). The Federal MUTCD can be downloaded at http://mutcd.fhwa.dot.gov/.

Addresses for Publications Referenced in the MUTCD

American Automobile Association (AAA)
1000 AAA Drive
Heathrow, FL 32746
www.aaa.com
800-222-4357

American Association of State Highway and Transportation Officials (AASHTO)
444 North Capitol Street, NW, Suite 249
Washington, DC 20001
www.transportation.org
202-624-5800

American National Standards Institute (ANSI)
1819 L Street, NW, 6th Floor
Washington, DC 20036
www.ansi.org
202-293-8020

American Railway Engineering and Maintenance-of-Way Association (AREMA)
10003 Derekwood Lane, Suite 210
Lanham, MD 20706
www.arema.org
301-459-3200

Federal Highway Administration Report Center
Facsimile number: 814-239-2156
report.center@fhwa.dot.gov

Illuminating Engineering Society (IES)
120 Wall Street, Floor 17
New York, NY 10005
www.iesna.org
212-248-5000

Institute of Makers of Explosives
1120 19th Street, NW, Suite 310
Washington, DC 20036-3605
www.ime.org
202-429-9280

Institute of Transportation Engineers (ITE)
1099 14th Street, NW, Suite 300 West
Washington, DC 20005-3438
www.ite.org
202-289-0222

International Organization for Standardization
1, ch. de la Voie-Creuse
Case Postale 56
CH-1211
Geneva 20, Switzerland
www.iso.ch
011-41-22-749-0111

International Safety Equipment Association (ISEA)
1901 North Moore Street, Suite 808
Arlington, VA 22209
www.safetyequipment.org
703-525-1695

National Committee on Uniform Traffic Laws and Ordinances (NCUTLO)
107 South West Street, Suite 110
Alexandria, VA 22314
www.ncutlo.org
800-807-5290

National Electrical Manufacturers Association (NEMA)
1300 North 17th Street, Suite 1752
Rosslyn, VA 22209
www.nema.org
703-841-3200

Occupational Safety and Health Administration (OSHA)
U.S. Department of Labor
200 Constitution Avenue, NW
Washington, DC 20210
www.osha.gov
800-321-6742

Transportation Research Board (TRB)
The National Academies
500 Fifth Street, NW
Washington, DC 20001
www.nas.edu/trb
202-334-3072

U.S. Architectural and Transportation Barriers Compliance Board (The U.S. Access Board)
1331 F Street, NW, Suite 1000
Washington, DC 20004-1111
www.access-board.gov
202-272-0080

Acknowledgments

The Federal Highway Administration gratefully acknowledges the valuable assistance that it received from the National Committee on Uniform Traffic Control Devices and its more than 250 voluntary members in the development of this Manual.

MANUAL ON UNIFORM TRAFFIC CONTROL DEVICES
TABLE OF CONTENTS

Page

INTRODUCTION I

PART 1. GENERAL

CHAPTER 1A. GENERAL

Section 1A.01 Purpose of Traffic Control Devices 1
Section 1A.02 Principles of Traffic Control Devices 1
Section 1A.03 Design of Traffic Control Devices 1a
Section 1A.04 Placement and Operation of Traffic Control Devices 2
Section 1A.05 Maintenance of Traffic Control Devices 2
Section 1A.06 Uniformity of Traffic Control Devices 2
Section 1A.07 Responsibility for Traffic Control Devices 2
Section 1A.08 Authority for Placement of Traffic Control Devices 3
Section 1A.09 Engineering Study and Engineering Judgment 4
Section 1A.10 Interpretations, Experimentations, Changes, and Interim Approvals 4
Section 1A.11 Relation to Other Publications 7
Section 1A.12 Color Code 10
Section 1A.13 Definitions of Headings, Words, and Phrases in this Manual 10
Section 1A.14 Meanings of Acronyms and Abbreviations in this Manual 23
Section 1A.15 Abbreviations Used on Traffic Control Devices 24
Section 1A.MI16 (Michigan) Signs or Lights Resembling Traffic Control Devices or Emergency Vehicle Lights 26

PART 2. SIGNS

CHAPTER 2A. GENERAL

Section 2A.01 Function and Purpose of Signs 27
Section 2A.02 Definitions 27
Section 2A.03 Standardization of Application 27
Section 2A.04 Excessive Use of Signs 27
Section 2A.05 Classification of Signs 28
Section 2A.06 Design of Signs 28
Section 2A.07 Retroreflectivity and Illumination 29
Section 2A.08 Maintaining Minimum Retroreflectivity 30
Section 2A.09 Shapes 32
Section 2A.10 Sign Colors 32
Section 2A.11 Dimensions 32
Section 2A.12 Symbols 34
Section 2A.13 Word Messages 35
Section 2A.14 Sign Borders 36
Section 2A.15 Enhanced Conspicuity for Standard Signs 36
Section 2A.16 Standardization of Location 37
Section 2A.17 Overhead Sign Installations 41
Section 2A.18 Mounting Height 42
Section 2A.19 Lateral Offset 43
Section 2A.20 Orientation 43
Section 2A.21 Posts and Mountings 44
Section 2A.22 Maintenance 44
Section 2A.23 Median Opening Treatments for Divided Highways with Wide Medians 44

CHAPTER 2B. REGULATORY SIGNS, BARRICADES, AND GATES

Section 2B.01 Application of Regulatory Signs 45
Section 2B.02 Design of Regulatory Signs 45
Section 2B.03 Size of Regulatory Signs 45
Section 2B.04 Right-of-Way at Intersections 49
Section 2B.05 STOP Sign (R1-1) and ALL WAY Plaque (R1-3P) 51
Section 2B.06 STOP Sign Applications 52
Section 2B.07 Multi-Way Stop Applications 52
Section 2B.08 YIELD Sign (R1-2) 53
Section 2B.09 YIELD Sign Applications 53
Section 2B.10 STOP Sign or YIELD Sign Placement 53
Section 2B.11 Yield Here To Pedestrians Signs and Stop Here For Pedestrians Signs (R1-5 Series) 54
Section 2B.12 In-Street and Overhead Pedestrian Crossing Signs (R1-6, R1-6a, R1-9, and R1-9a) 55
Section 2B.13 Speed Limit Sign (R2-1) 56
Section 2B.14 Truck Speed Limit Plaque (R2-2P) 58
Section 2B.15 Night Speed Limit Plaque (R2-3P) 58
Section 2B.16 Minimum Speed Limit Plaque (R2-4P) 59
Section 2B.17 Higher Fines Signs and Plaque (R2-6P, R2-10, and R2-11) 59
Section 2B.18 Movement Prohibition Signs (R3-1 through R3-4, R3-18, and R3-27) 60
Section 2B.19 Intersection Lane Control Signs (R3-5 through R3-8) 61
Section 2B.20 Mandatory Movement Lane Control Signs (R3-5, R3-5a, R3-7, and R3-20) 62
Section 2B.21 Optional Movement Lane Control Sign (R3-6) 63
Section 2B.22 Advance Intersection Lane Control Signs (R3-8 Series) 64
Section 2B.23 RIGHT (LEFT) LANE MUST EXIT Sign (R3-33) 64
Section 2B.24 Two-Way Left Turn Only Signs (R3-9a, R3-9b) 64
Section 2B.25 BEGIN and END Plaques (R3-9cP, R3-9dP) 64
Section 2B.26 Reversible Lane Control Signs (R3-9e through R3-9i) 65
Section 2B.27 Jughandle Signs (R3-23, R3-24, R3-25, and R3-26 Series) 67
Section 2B.28 DO NOT PASS Sign (R4-1) 72
Section 2B.29 PASS WITH CARE Sign (R4-2) 73
Section 2B.30 KEEP RIGHT EXCEPT TO PASS Sign (R4-16) and SLOWER TRAFFIC KEEP RIGHT Sign (R4-3) 73
Section 2B.31 TRUCKS USE RIGHT LANE Sign (R4-5) 73
Section 2B.32 Keep Right and Keep Left Signs (R4-7, R4-8) 73
Section 2B.33 STAY IN LANE Sign (R4-9) 74
Section 2B.34 RUNAWAY VEHICLES ONLY Sign (R4-10) 74
Section 2B.35 Slow Vehicle Turn-Out Signs (R4-12, R4-13, and R4-14) 74
Section 2B.36 DO NOT DRIVE ON SHOULDER Sign (R4-17) and DO NOT PASS ON SHOULDER Sign (R4-18) 75
Section 2B.37 DO NOT ENTER Sign (R5-1) 75
Section 2B.38 WRONG WAY Sign (R5-1a) 76
Section 2B.39 Selective Exclusion Signs 76
Section 2B.40 ONE WAY Signs (R6-1, R6-2) 77
Section 2B.41 Wrong-Way Traffic Control at Interchange Ramps 79
Section 2B.42 Divided Highway Crossing Signs (R6-3, R6-3a) 82
Section 2B.43 Roundabout Directional Arrow Signs (R6-4, R6-4a, and R6-4b) 84
Section 2B.44 Roundabout Circulation Plaque (R6-5P) 84
Section 2B.45 Examples of Roundabout Signing 84
Section 2B.46 Parking, Standing, and Stopping Signs (R7 and R8 Series) 88
Section 2B.47 Design of Parking, Standing, and Stopping Signs 89
Section 2B.48 Placement of Parking, Stopping, and Standing Signs 92
Section 2B.49 Emergency Restriction Signs (R8-4, R8-7, R8-8) 92
Section 2B.50 WALK ON LEFT FACING TRAFFIC and No Hitchhiking Signs (R9-1, R9-4, R9-4a) 92

Section 2B.51 Pedestrian Crossing Signs (R9-2, R9-3) 92
Section 2B.52 Traffic Signal Pedestrian and Bicycle Actuation Signs (R10-1 through R10-4, and R10-24 through R10-26) 94
Section 2B.53 Traffic Signal Signs (R10-5 through R10-30) 95
Section 2B.54 No Turn on Red Signs (R10-11 Series, R10-17a, and R10-30) 95
Section 2B.55 Photo Enforced Signs and Plaques (R10-18, R10-19P, R10-19aP) Section Deleted 97
Section 2B.56 Ramp Metering Signs (R10-28 and R10-29) 97
Section 2B.57 KEEP OFF MEDIAN Sign (R11-1) 97
Section 2B.58 ROAD CLOSED Sign (R11-2) and LOCAL TRAFFIC ONLY Signs (R11-3 Series, R11-4) ... 98
Section 2B.59 Weight Limit Signs (R12-1 through R12-5) 98
Section 2B.60 Weigh Station Signs (R13 Series) 99
Section 2B.61 TRUCK ROUTE Sign (R14-1) 99
Section 2B.62 Hazardous Material Signs (R14-2, R14-3) 99
Section 2B.63 National Network Signs (R14-4, R14-5) 100
Section 2B.64 Headlight Use Signs (R16-5 through R16-11) 100
Section 2B.65 FENDER BENDER Sign (R16-4) 101
Section 2B.66 Seat Belt Symbol 101
Section 2B.67 Barricades 101
Section 2B.68 Gates 101

CHAPTER 2C. WARNING SIGNS AND OBJECT MARKERS

Section 2C.01 Function of Warning Signs 103
Section 2C.02 Application of Warning Signs 103
Section 2C.03 Design of Warning Signs 103
Section 2C.04 Size of Warning Signs 103
Section 2C.05 Placement of Warning Signs 108
Section 2C.06 Horizontal Alignment Warning Signs 109
Section 2C.07 Horizontal Alignment Signs (W1-1 through W1-5, W1-11, W1-15) 110
Section 2C.08 Advisory Speed Plaque (W13-1P) 112
Section 2C.09 Chevron Alignment Sign (W1-8) 112
Section 2C.10 Combination Horizontal Alignment/Advisory Speed Signs (W1-1a, W1-2a) 113
Section 2C.11 Combination Horizontal Alignment/Intersection Signs (W1-10 Series) 113
Section 2C.12 One-Direction Large Arrow Sign (W1-6) 113
Section 2C.13 Truck Rollover Warning Sign (W1-13) 114
Section 2C.14 Advisory Exit and Ramp Speed Signs (W13-2 and W13-3) 114
Section 2C.15 Combination Horizontal Alignment/Advisory Exit and Ramp Speed Signs (W13-6 and W13-7) 115
Section 2C.16 Hill Signs (W7-1, W7-1a) 115
Section 2C.17 Truck Escape Ramp Signs (W7-4 Series) 115
Section 2C.18 HILL BLOCKS VIEW Sign (W7-6) 117
Section 2C.19 ROAD NARROWS Sign (W5-1) 117
Section 2C.20 NARROW BRIDGE Sign (W5-2) 118
Section 2C.21 ONE LANE BRIDGE Sign (W5-3) 118
Section 2C.22 Divided Highway Sign (W6-1) 119
Section 2C.23 Divided Highway Ends Sign (W6-2) 119
Section 2C.24 Freeway or Expressway Ends Signs (W19 Series) 119
Section 2C.25 Double Arrow Sign (W12-1) 119
Section 2C.26 DEAD END/NO OUTLET Signs (W14-1, W14-1a, W14-2, W14-2a) 119
Section 2C.27 Low Clearance Signs (W12-2 and W12-2a) 120
Section 2C.28 BUMP and DIP Signs (W8-1, W8-2) 120
Section 2C.29 SPEED HUMP Sign (W17-1) 120
Section 2C.30 PAVEMENT ENDS Sign (W8-3) 122
Section 2C.31 Shoulder Signs (W8-4, W8-9, W8-17, W8-23, and W8-25) 122
Section 2C.32 Surface Condition Signs (W8-5, W8-7, W8-8, W8-11, W8-13, and W8-14) 122

Section 2C.33 Warning Signs and Plaques for Motorcyclists (W8-15, W8-15P, and W8-16) ... 123
Section 2C.34 NO CENTER LINE Sign (W8-12) ... 123
Section 2C.35 Weather Condition Signs (W8-18, W8-19, W8-21, and W8-22) ... 123
Section 2C.36 Advance Traffic Control Signs (W3-1, W3-2, W3-3, W3-4) ... 123
Section 2C.37 Advance Ramp Control Signal Signs (W3-7 and W3-8) ... 124
Section 2C.38 Reduced Speed Limit Ahead Signs (W3-5, W3-5a) ... 124
Section 2C.39 DRAW BRIDGE Sign (W3-6) ... 125
Section 2C.40 Merge Signs (W4-1, W4-5) ... 125
Section 2C.41 Added Lane Signs (W4-3, W4-6) ... 126
Section 2C.42 Lane Ends Signs (W4-2, W9-1, W9-2) ... 126
Section 2C.43 RIGHT (LEFT) LANE EXIT ONLY AHEAD Sign (W9-7) ... 126
Section 2C.44 Two-Way Traffic Sign (W6-3) ... 127
Section 2C.45 NO PASSING ZONE Sign (W14-3) ... 127
Section 2C.46 Intersection Warning Signs (W2-1 through W2-8) ... 127
Section 2C.47 Two-Direction Large Arrow Sign (W1-7) ... 128
Section 2C.48 Traffic Signal Signs (W25-1, W25-2) ... 128
Section 2C.49 Vehicular Traffic Warning Signs (W8-6, W11-1, W11-5, W11-5a, W11-8, W11-10, W11-11, W11-12P, W11-14, W11-15, and W11-15a) ... 128
Section 2C.50 Non-Vehicular Warning Signs (W11-2, W11-3, W11-4, W11-6, W11-7, W11-9, and W11-16 through W11-22) ... 130
Section 2C.51 Playground Sign (W15-1) ... 131
Section 2C.52 NEW TRAFFIC PATTERN AHEAD Sign (W23-2) ... 131
Section 2C.53 Use of Supplemental Warning Plaques ... 131
Section 2C.54 Design of Supplemental Warning Plaques ... 132
Section 2C.55 Distance Plaques (W16-2 Series, W16-3 Series, W16-4P, W7-3aP) ... 132
Section 2C.56 Supplemental Arrow Plaques (W16-5P, W16-6P) ... 132
Section 2C.57 Hill-Related Plaques (W7-2 Series, W7-3 Series) ... 133
Section 2C.58 Advance Street Name Plaque (W16-8P, W16-8aP) ... 133
Section 2C.59 CROSS TRAFFIC DOES NOT STOP Plaque (W4-4P) ... 133
Section 2C.60 SHARE THE ROAD Plaque (W16-1P) ... 133
Section 2C.61 Photo Enforced Plaque (W16-10P) ... 134
Section 2C.62 NEW Plaque (W16-15P) ... 134
Section 2C.63 Object Marker Design and Placement Height ... 134
Section 2C.64 Object Markers for Obstructions Within the Roadway ... 135
Section 2C.65 Object Markers for Obstructions Adjacent to the Roadway ... 135
Section 2C.66 Object Markers for Ends of Roadways ... 136
Section 2C.MI67 (Michigan) ROAD ENDS Sign (W14-2b) ... 136

CHAPTER 2D. GUIDE SIGNS—CONVENTIONAL ROADS

Section 2D.01 Scope of Conventional Road Guide Sign Standards ... 137
Section 2D.02 Application ... 137
Section 2D.03 Color, Retroreflection, and Illumination ... 137
Section 2D.04 Size of Signs ... 137
Section 2D.05 Lettering Style ... 138
Section 2D.06 Size of Lettering ... 138
Section 2D.07 Amount of Legend ... 140
Section 2D.08 Arrows ... 140
Section 2D.09 Numbered Highway Systems ... 142
Section 2D.10 Route Signs and Auxiliary Signs ... 142
Section 2D.11 Design of Route Signs ... 143
Section 2D.12 Design of Route Sign Auxiliaries ... 144
Section 2D.13 Junction Auxiliary Sign (M2-1) ... 144
Section 2D.14 Combination Junction Sign (M2-2) ... 145
Section 2D.15 Cardinal Direction Auxiliary Signs (M3-1 through M3-4) ... 145
Section 2D.16 Auxiliary Signs for Alternative Routes (M4 Series) ... 145

Section 2D.17 ALTERNATE Auxiliary Signs (M4-1, M4-1a) 145
Section 2D.18 BY-PASS Auxiliary Sign (M4-2) 146
Section 2D.19 BUSINESS Auxiliary Sign (M4-3) 146
Section 2D.20 TRUCK Auxiliary Sign (M4-4) 146
Section 2D.21 TO Auxiliary Sign (M4-5) 146
Section 2D.22 END Auxiliary Sign (M4-6) 146
Section 2D.23 BEGIN Auxiliary Sign (M4-14) 146
Section 2D.24 TEMPORARY Auxiliary Signs (M4-7, M4-7a) 147
Section 2D.25 Temporary Detour and Auxiliary Signs 147
Section 2D.26 Advance Turn Arrow Auxiliary Signs (M5-1, M5-2, and M5-3) 147
Section 2D.27 Lane Designation Auxiliary Signs (M5-4, M5-5, and M5-6) 148
Section 2D.28 Directional Arrow Auxiliary Signs (M6 Series) 148
Section 2D.29 Route Sign Assemblies 148
Section 2D.30 Junction Assembly 153
Section 2D.31 Advance Route Turn Assembly 153
Section 2D.32 Directional Assembly 153
Section 2D.33 Combination Lane-Use/Destination Overhead Guide Sign (D15-1) 154
Section 2D.34 Confirming or Reassurance Assemblies 155
Section 2D.35 Trailblazer Assembly 155
Section 2D.36 Destination and Distance Signs 156
Section 2D.37 Destination Signs (D1 Series) 156
Section 2D.38 Destination Signs at Circular Intersections 157
Section 2D.39 Destination Signs at Jughandles 158
Section 2D.40 Location of Destination Signs 158
Section 2D.41 Distance Signs (D2 Series) 161
Section 2D.42 Location of Distance Signs 161
Section 2D.43 Street Name Signs (D3-1 or D3-1a) 161
Section 2D.44 Advance Street Name Signs (D3-2) 163
Section 2D.45 Signing on Conventional Roads on Approaches to Interchanges 164
Section 2D.46 Freeway Entrance Signs (D13-3 and D13-3a) 170
Section 2D.47 Parking Area Guide Sign (D4-1) 171
Section 2D.48 PARK - RIDE Sign (D4-2) 171
Section 2D.49 Weigh Station Signing (D8 Series) 172
Section 2D.50 Community Wayfinding Signs 172
Section 2D.51 Truck, Passing, or Climbing Lane Signs (D17-1 and D17-2) 178
Section 2D.52 Slow Vehicle Turn-Out Sign (D17-7) 178
Section 2D.53 Signing of Named Highways 179
Section 2D.54 Crossover Signs (D13-1 and D13-2) 179
Section 2D.55 National Scenic Byways Signs (D6-4, D6-4a) 179
Section 2D.MI56 (Michigan) Snowmobile Route Sign (D11-2) 180

CHAPTER 2E. GUIDE SIGNS—FREEWAYS AND EXPRESSWAYS

Section 2E.01 Scope of Freeway and Expressway Guide Sign Standards 181
Section 2E.02 Freeway and Expressway Signing Principles 181
Section 2E.03 Guide Sign Classification 181
Section 2E.04 General 182
Section 2E.05 Color of Guide Signs 182
Section 2E.06 Retroreflection or Illumination 182
Section 2E.07 Characteristics of Urban Signing 182
Section 2E.08 Characteristics of Rural Signing 183
Section 2E.09 Signing of Named Highways 183
Section 2E.10 Amount of Legend on Guide Signs 183
Section 2E.11 Number of Signs at an Overhead Installation and Sign Spreading 183
Section 2E.12 Pull-Through Signs (E6-2, E6-2a) 184
Section 2E.13 Designation of Destinations 184

Section 2E.14 Size and Style of Letters and Signs 185
Section 2E.15 lnterline and Edge Spacing 185
Section 2E.16 Sign Borders 192
Section 2E.17 Abbreviations 192
Section 2E.18 Symbols 192
Section 2E.19 Arrows for Interchange Guide Signs 192
Section 2E.20 Signing for Option Lanes at Splits and Multi-Lane Exits 193
Section 2E.21 Design of Overhead Arrow-per-Lane Guide Signs for Option Lanes 193
Section 2E.22 Design of Freeway and Expressway Diagrammatic Guide Signs for Option Lanes 198
Section 2E.23 Signing for Intermediate and Minor Interchange Multi-Lane Exits with an Option Lane ... 203
Section 2E.24 Signing for Interchange Lane Drops 203
Section 2E.25 Overhead Sign Installations 206
Section 2E.26 Lateral Offset 210
Section 2E.27 Route Signs and Trailblazer Assemblies 210
Section 2E.28 Eisenhower Interstate System Signs (M1-10, M1-10a) 211
Section 2E.29 Signs for Intersections at Grade 211
Section 2E.30 Interchange Guide Signs 211
Section 2E.31 Interchange Exit Numbering 212
Section 2E.32 Interchange Classification 216
Section 2E.33 Advance Guide Signs 216
Section 2E.34 Next Exit Plaques 218
Section 2E.35 Other Supplemental Guide Signs 218
Section 2E.36 Exit Direction Signs 220
Section 2E.37 Exit Gore Signs (E5-1 Series) 222
Section 2E.38 Post-Interchange Signs 222
Section 2E.39 Post-Interchange Distance Signs 223
Section 2E.40 Interchange Sequence Signs 223
Section 2E.41 Community Interchanges Identification Signs 225
Section 2E.42 NEXT XX EXITS Sign 225
Section 2E.43 Signing by Type of Interchange 226
Section 2E.44 Freeway-to-Freeway Interchange 226
Section 2E.45 Cloverleaf Interchange 226
Section 2E.46 Cloverleaf Interchange with Collector-Distributor Roadways 230
Section 2E.47 Partial Cloverleaf Interchange 230
Section 2E.48 Diamond Interchange 230
Section 2E.49 Diamond Interchange in Urban Area 234
Section 2E.50 Closely-Spaced Interchanges 234
Section 2E.51 Minor Interchange 234
Section 2E.52 Signing on Conventional Road Approaches and Connecting Roadways 235
Section 2E.53 Wrong-Way Traffic Control at Interchange Ramps 235
Section 2E.54 Weigh Station Signing 236

CHAPTER 2F. TOLL ROAD SIGNS

Section 2F.01 Scope 237
Section 2F.02 Sizes of Toll Road Signs 237
Section 2F.03 Use of Purple Backgrounds and Underlay Panels with ETC Account Pictographs 238
Section 2F.04 Size of ETC Pictographs 238
Section 2F.05 Regulatory Signs for Toll Plazas 238
Section 2F.06 Pay Toll Advance Warning Sign (W9-6) 240
Section 2F.07 Pay Toll Advance Warning Plaque (W9-6P) 241
Section 2F.08 Stop Ahead Pay Toll Warning Sign (W9-6a) 242
Section 2F.09 Stop Ahead Pay Toll Warning Plaque (W9-6aP) 242
Section 2F.10 LAST EXIT BEFORE TOLL Warning Plaque (W16-16P) 242
Section 2F.11 TOLL Auxiliary Sign (M4-15) 242

Section 2F.12 Electronic Toll Collection (ETC) Account-Only Auxiliary Signs (M4-16 and M4-20) 243
Section 2F.13 Toll Facility and Toll Plaza Guide Signs – General 243
Section 2F.14 Advance Signs for Conventional Toll Plazas 248
Section 2F.15 Advance Signs for Toll Plazas on Diverging Alignments from Open-Road ETC Account-Only Lanes 249
Section 2F.16 Toll Plaza Canopy Signs 252
Section 2F.17 Guide Signs for Entrances to ETC Account-Only Facilities 252
Section 2F.18 ETC Program Information Signs 252

CHAPTER 2G. PREFERENTIAL AND MANAGED LANE SIGNS

Section 2G.01 Scope 253
Section 2G.02 Sizes of Preferential and Managed Lane Signs 253
Section 2G.03 Regulatory Signs for Preferential Lanes – General 253
Section 2G.04 Preferential Lane Vehicle Occupancy Definition Regulatory Signs (R3-10 Series and R3-13 Series) 258
Section 2G.05 Preferential Lane Periods of Operation Regulatory Signs (R3-11 Series and R3-14 Series) .. 259
Section 2G.06 Preferential Lane Advance Regulatory Signs (R3-12, R3-12e, R3-12f, R3-15, R3-15a, and R3-15d) 263
Section 2G.07 Preferential Lane Ends Regulatory Signs (R3-12a, R3-12b, R3-12c, R3-12d, R3-12g, R3-12h, R3-15b, R3-15c, and R3-15e) 263
Section 2G.08 Warning Signs on Median Barriers for Preferential Lanes 263
Section 2G.09 High-Occupancy Vehicle (HOV) Plaque (W16-11P) 264
Section 2G.10 Preferential Lane Guide Signs – General 265
Section 2G.11 Guide Signs for Initial Entry Points to Preferential Lanes 267
Section 2G.12 Guide Signs for Intermediate Entry Points to Preferential Lanes 268
Section 2G.13 Guide Signs for Egress from Preferential Lanes to General-Purpose Lanes 270
Section 2G.14 Guide Signs for Direct Entrances to Preferential Lanes from Another Highway 273
Section 2G.15 Guide Signs for Direct Exits from Preferential Lanes to Another Highway 273
Section 2G.16 Signs for Priced Managed Lanes – General 276
Section 2G.17 Regulatory Signs for Priced Managed Lanes 279
Section 2G.18 Guide Signs for Priced Managed Lanes 279

CHAPTER 2H. GENERAL INFORMATION SIGNS

Section 2H.01 Sizes of General Information Signs 292
Section 2H.02 General Information Signs (I Series) 292
Section 2H.03 Traffic Signal Speed Sign (I1-1) 294
Section 2H.04 Miscellaneous Information Signs 294
Section 2H.05 Reference Location Signs (D10-1 through D10-3) and Intermediate Reference Location Signs (D10-1a through D10-3a) 294
Section 2H.06 Enhanced Reference Location Signs (D10-4, D10-5) 296
Section 2H.07 Auto Tour Route Signs 297
Section 2H.08 Acknowledgment Signs 297

CHAPTER 2I. GENERAL SERVICE SIGNS

Section 2I.01 Sizes of General Service Signs 299
Section 2I.02 General Service Signs for Conventional Roads 300
Section 2I.03 General Service Signs for Freeways and Expressways 303
Section 2I.04 Interstate Oasis Signing 306
Section 2I.05 Rest Area and Other Roadside Area Signs 307
Section 2I.06 Brake Check Area Signs (D5-13 and D5-14) 308
Section 2I.07 Chain-Up Area Signs (D5-15 and D5-16) 308
Section 2I.08 Tourist Information and Welcome Center Signs 308
Section 2I.09 Radio Information Signing 310
Section 2I.10 TRAVEL INFO CALL 511 Signs (D12-5 and D12-5a) 311
Section 2I.11 Carpool and Ridesharing Signing 311

CHAPTER 2J. SPECIFIC SERVICE SIGNS

Section 2J.01 Eligibility 312
Section 2J.02 Application....313
Section 2J.03 Logos and Logo Sign Panels....313
Section 2J.04 Number and Size of Signs and Logo Sign Panels....317
Section 2J.05 Size of Lettering 317
Section 2J.06 Signs at Interchanges 317
Section 2J.07 Single-Exit Interchanges....317
Section 2J.08 Double-Exit Interchanges 318
Section 2J.09 Specific Service Trailblazer Signs 318
Section 2J.10 Signs at Intersections 319
Section 2J.11 Signing Policy 319

CHAPTER 2K. TOURIST-ORIENTED DIRECTIONAL SIGNS

Section 2K.01 Purpose and Application.... 320
Section 2K.02 Design 320
Section 2K.03 Style and Size of Lettering 323
Section 2K.04 Arrangement and Size of Signs 323
Section 2K.05 Advance Signs 323
Section 2K.06 Sign Locations 324
Section 2K.07 State Policy 324

CHAPTER 2L. CHANGEABLE MESSAGE SIGNS

Section 2L.01 Description of Changeable Message Signs.... 325
Section 2L.02 Applications of Changeable Message Signs 325
Section 2L.03 Legibility and Visibility of Changeable Message Signs.... 326
Section 2L.04 Design Characteristics of Changeable Message Signs 326
Section 2L.05 Message Length and Units of Information 328
Section 2L.06 Installation of Permanent Changeable Message Signs 329

CHAPTER 2M. RECREATIONAL AND CULTURAL INTEREST AREA SIGNS

Section 2M.01 Scope.... 330
Section 2M.02 Application of Recreational and Cultural Interest Area Signs 330
Section 2M.03 Regulatory and Warning Signs.... 330
Section 2M.04 General Design Requirements for Recreational and Cultural Interest Area Symbol Guide Signs.... 330
Section 2M.05 Symbol Sign Sizes 332
Section 2M.06 Use of Educational Plaques.... 332
Section 2M.07 Use of Prohibitive Circle and Diagonal Slash for Non-Road Applications 332
Section 2M.08 Placement of Recreational and Cultural Interest Area Symbol Signs.... 332
Section 2M.09 Destination Guide Signs 333
Section 2M.10 Memorial or Dedication Signing 339

CHAPTER 2N. EMERGENCY MANAGEMENT SIGNING

Section 2N.01 Emergency Management 342
Section 2N.02 Design of Emergency Management Signs.... 342
Section 2N.03 Evacuation Route Signs (EM-1 and EM-1a) 342
Section 2N.04 AREA CLOSED Sign (EM-2).... 344
Section 2N.05 TRAFFIC CONTROL POINT Sign (EM-3) 344
Section 2N.06 MAINTAIN TOP SAFE SPEED Sign (EM-4) 344
Section 2N.07 ROAD (AREA) USE PERMIT REQUIRED FOR THRU TRAFFIC Sign (EM-5).... 345
Section 2N.08 Emergency Aid Center Signs (EM-6 Series).... 345
Section 2N.09 Shelter Directional Signs (EM-7 Series).... 346

PART 3. MARKINGS

CHAPTER 3A. GENERAL

Section 3A.01 Functions and Limitations 347
Section 3A.02 Standardization of Application 347
Section 3A.03 Maintaining Minimum Pavement Marking Retroreflectivity 347
Section 3A.04 Materials 347
Section 3A.05 Colors 348
Section 3A.06 Functions, Widths, and Patterns of Longitudinal Pavement Markings 348

CHAPTER 3B. PAVEMENT AND CURB MARKINGS

Section 3B.01 Yellow Center Line Pavement Markings and Warrants 349
Section 3B.02 No-Passing Zone Pavement Markings and Warrants 352
Section 3B.03 Other Yellow Longitudinal Pavement Markings 354
Section 3B.04 White Lane Line Pavement Markings and Warrants 356
Section 3B.05 Other White Longitudinal Pavement Markings 370
Section 3B.06 Edge Line Pavement Markings 371
Section 3B.07 Warrants for Use of Edge Lines 371
Section 3B.08 Extensions Through Intersections or Interchanges 371
Section 3B.09 Lane-Reduction Transition Markings 374
Section 3B.10 Approach Markings for Obstructions 376
Section 3B.11 Raised Pavement Markers – General 376
Section 3B.12 Raised Pavement Markers as Vehicle Positioning Guides with Other Longitudinal Markings 379
Section 3B.13 Raised Pavement Markers Supplementing Other Markings 379
Section 3B.14 Raised Pavement Markers Substituting for Pavement Markings 380
Section 3B.15 Transverse Markings 381
Section 3B.16 Stop and Yield Lines 381
Section 3B.17 Do Not Block Intersection Markings 382
Section 3B.18 Crosswalk Markings 383
Section 3B.19 Parking Space Markings 385
Section 3B.20 Pavement Word, Symbol, and Arrow Markings 387
Section 3B.21 Speed Measurement Markings 393
Section 3B.22 Speed Reduction Markings 393
Section 3B.23 Curb Markings 394
Section 3B.24 Chevron and Diagonal Crosshatch Markings 395
Section 3B.25 Speed Hump Markings 395
Section 3B.26 Advance Speed Hump Markings 395

CHAPTER 3C. ROUNDABOUT MARKINGS

Section 3C.01 General 399
Section 3C.02 White Lane Line Pavement Markings for Roundabouts 413
Section 3C.03 Edge Line Pavement Markings for Roundabout Circulatory Roadways 413
Section 3C.04 Yield Lines for Roundabouts 413
Section 3C.05 Crosswalk Markings at Roundabouts 413
Section 3C.06 Word, Symbol, and Arrow Pavement Markings for Roundabouts 413
Section 3C.07 Markings for Other Circular Intersections 414

CHAPTER 3D MARKINGS FOR PREFERENTIAL LANES

Section 3D.01 Preferential Lane Word and Symbol Markings 415
Section 3D.02 Preferential Lane Longitudinal Markings for Motor Vehicles 416

CHAPTER 3E. MARKINGS FOR TOLL PLAZAS

Section 3E.01 Markings for Toll Plazas 423

CHAPTER 3F DELINEATORS

Section 3F.01 Delineators 424
Section 3F.02 Delineator Design 424
Section 3F.03 Delineator Application 424
Section 3F.04 Delineator Placement and Spacing 426

CHAPTER 3G COLORED PAVEMENTS

Section 3G.01 General 428

CHAPTER 3H CHANNELIZING DEVICES USED FOR EMPHASIS OF PAVEMENT MARKING PATTERNS

Section 3H.01 Channelizing Devices 429

CHAPTER 3I ISLANDS

Section 3I.01 General 430
Section 3I.02 Approach-End Treatment 430
Section 3I.03 Island Marking Application 430
Section 3I.04 Island Marking Colors 430
Section 3I.05 Island Delineation 431
Section 3I.06 Pedestrian Islands and Medians 431

CHAPTER 3J RUMBLE STRIP MARKINGS

Section 3J.01 Longitudinal Rumble Strip Markings 432
Section 3J.02 Transverse Rumble Strip Markings 432

PART 4 HIGHWAY TRAFFIC SIGNALS

CHAPTER 4A GENERAL

Section 4A.01 Types 433
Section 4A.02 Definitions Relating to Highway Traffic Signals 433

CHAPTER 4B TRAFFIC CONTROL SIGNALS—GENERAL

Section 4B.01 General 434
Section 4B.02 Basis of Installation or Removal of Traffic Control Signals 434
Section 4B.03 Advantages and Disadvantages of Traffic Control Signals 434
Section 4B.04 Alternatives to Traffic Control Signals 435
Section 4B.05 Adequate Roadway Capacity 435

CHAPTER 4C TRAFFIC CONTROL SIGNAL NEEDS STUDIES

Section 4C.01 Studies and Factors for Justifying Traffic Control Signals 436
Section 4C.02 Warrant 1, Eight-Hour Vehicular Volume 437
Section 4C.03 Warrant 2, Four-Hour Vehicular Volume 439
Section 4C.04 Warrant 3, Peak Hour 439
Section 4C.05 Warrant 4, Pedestrian Volume 442
Section 4C.06 Warrant 5, School Crossing 442
Section 4C.07 Warrant 6, Coordinated Signal System 445
Section 4C.08 Warrant 7, Crash Experience 445
Section 4C.09 Warrant 8, Roadway Network 446
Section 4C.10 Warrant 9, Intersection Near a Grade Crossing 446

CHAPTER 4D TRAFFIC CONTROL SIGNAL FEATURES

Section 4D.01 General 449
Section 4D.02 Responsibility for Operation and Maintenance 449
Section 4D.03 Provisions for Pedestrians 450
Section 4D.04 Meaning of Vehicular Signal Indications 450

Section 4D.05 Application of Steady Signal Indications ... 453
Section 4D.06 Signal Indications – Design, Illumination, Color, and Shape ... 456
Section 4D.07 Size of Vehicular Signal Indications ... 456
Section 4D.08 Positions of Signal Indications Within a Signal Face – General ... 457
Section 4D.09 Positions of Signal Indications Within a Vertical Signal Face ... 457
Section 4D.10 Positions of Signal Indications Within a Horizontal Signal Face ... 459
Section 4D.11 Number of Signal Faces on an Approach ... 459
Section 4D.12 Visibility, Aiming, and Shielding of Signal Faces ... 461
Section 4D.13 Lateral Positioning of Signal Faces ... 463
Section 4D.14 Longitudinal Positioning of Signal Faces ... 464
Section 4D.15 Mounting Height of Signal Faces ... 465
Section 4D.16 Lateral Offset (Clearance) of Signal Faces ... 465
Section 4D.17 Signal Indications for Left-Turn Movements – General ... 465
Section 4D.18 Signal Indications for Permissive Only Mode Left-Turn Movements ... 467
Section 4D.19 Signal Indications for Protected Only Mode Left-Turn Movements ... 469
Section 4D.20 Signal Indications for Protected/Permissive Mode Left-Turn Movements ... 471
Section 4D.21 Signal Indications for Right-Turn Movements – General ... 474
Section 4D.22 Signal Indications for Permissive Only Mode Right-Turn Movements ... 475
Section 4D.23 Signal Indications for Protected Only Mode Right-Turn Movements ... 478
Section 4D.24 Signal Indications for Protected/Permissive Mode Right-Turn Movements ... 480
Section 4D.25 Signal Indications for Approaches With Shared Left-Turn/Right-Turn Lanes and No Through Movement ... 484
Section 4D.26 Yellow Change and Red Clearance Intervals ... 485
Section 4D.27 Preemption and Priority Control of Traffic Control Signals ... 489
Section 4D.28 Flashing Operation of Traffic Control Signals – General ... 491
Section 4D.29 Flashing Operation – Transition Into Flashing Mode ... 491
Section 4D.30 Flashing Operation – Signal Indications During Flashing Mode ... 491
Section 4D.31 Flashing Operation – Transition Out of Flashing Mode ... 492
Section 4D.32 Temporary and Portable Traffic Control Signals ... 492
Section 4D.33 Lateral Offset of Signal Supports and Cabinets ... 493
Section 4D.34 Use of Signs at Signalized Locations ... 493
Section 4D.35 Use of Pavement Markings at Signalized Locations ... 494

CHAPTER 4E PEDESTRIAN CONTROL FEATURES

Section 4E.01 Pedestrian Signal Heads ... 495
Section 4E.02 Meaning of Pedestrian Signal Head Indications ... 495
Section 4E.03 Application of Pedestrian Signal Heads ... 495
Section 4E.04 Size, Design, and Illumination of Pedestrian Signal Head Indications ... 496
Section 4E.05 Location and Height of Pedestrian Signal Heads ... 497
Section 4E.06 Pedestrian Intervals and Signal Phases ... 497
Section 4E.07 Countdown Pedestrian Signals ... 499
Section 4E.08 Pedestrian Detectors ... 500
Section 4E.09 Accessible Pedestrian Signals and Detectors – General ... 504
Section 4E.10 Accessible Pedestrian Signals and Detectors – Location ... 505
Section 4E.11 Accessible Pedestrian Signals and Detectors – Walk Indications ... 505
Section 4E.12 Accessible Pedestrian Signals and Detectors – Tactile Arrows and Locator Tones ... 507
Section 4E.13 Accessible Pedestrian Signals and Detectors – Extended Pushbutton Press Features ... 507

CHAPTER 4F PEDESTRIAN HYBRID BEACONS

Section 4F.01 Application of Pedestrian Hybrid Beacons ... 509
Section 4F.02 Design of Pedestrian Hybrid Beacons ... 509
Section 4F.03 Operation of Pedestrian Hybrid Beacons ... 511

CHAPTER 4G TRAFFIC CONTROL SIGNALS AND HYBRID BEACONS FOR EMERGENCY-VEHICLE ACCESS

Section 4G.01 Application of Emergency-Vehicle Traffic Control Signals and Hybrid Beacons 513
Section 4G.02 Design of Emergency-Vehicle Traffic Control Signals 513
Section 4G.03 Operation of Emergency-Vehicle Traffic Control Signals 513
Section 4G.04 Emergency-Vehicle Hybrid Beacons 514

CHAPTER 4H TRAFFIC CONTROL SIGNALS FOR ONE-LANE, TWO-WAY FACILITIES

Section 4H.01 Application of Traffic Control Signals for One-Lane, Two-Way Facilities 516
Section 4H.02 Design of Traffic Control Signals for One-Lane, Two-Way Facilities.....516
Section 4H.03 Operation of Traffic Control Signals for One-Lane, Two-Way Facilities.....516

CHAPTER 4I TRAFFIC CONTROL SIGNALS FOR FREEWAY ENTRANCE RAMPS

Section 4I.01 Application of Freeway Entrance Ramp Control Signals.....517
Section 4I.02 Design of Freeway Entrance Ramp Control Signals 517
Section 4I.03 Operation of Freeway Entrance Ramp Control Signals.....518

CHAPTER 4J TRAFFIC CONTROL FOR MOVABLE BRIDGES

Section 4J.01 Application of Traffic Control for Movable Bridges.....519
Section 4J.02 Design and Location of Movable Bridge Signals and Gates 519
Section 4J.03 Operation of Movable Bridge Signals and Gates..... 521

CHAPTER 4K HIGHWAY TRAFFIC SIGNALS AT TOLL PLAZAS

Section 4K.01 Traffic Signals at Toll Plazas..... 522
Section 4K.02 Lane-Use Control Signals at or Near Toll Plazas 522
Section 4K.03 Warning Beacons at Toll Plazas 522

CHAPTER 4L FLASHING BEACONS

Section 4L.01 General Design and Operation of Flashing Beacons..... 523
Section 4L.02 Intersection Control Beacon 523
Section 4L.03 Warning Beacon 523
Section 4L.04 Speed Limit Sign Beacon 524
Section 4L.05 Stop Beacon 524

CHAPTER 4M LANE-USE CONTROL SIGNALS

Section 4M.01 Application of Lane-Use Control Signals..... 525
Section 4M.02 Meaning of Lane-Use Control Signal Indications 525
Section 4M.03 Design of Lane-Use Control Signals 526
Section 4M.04 Operation of Lane-Use Control Signals..... 527

CHAPTER 4N IN-ROADWAY LIGHTS

Section 4N.01 Application of In-Roadway Lights..... 528
Section 4N.02 In-Roadway Warning Lights at Crosswalks 528

PART 5 TRAFFIC CONTROL DEVICES FOR LOW-VOLUME ROADS

CHAPTER 5A GENERAL

Section 5A.01 Function 531
Section 5A.02 Application.....531
Section 5A.03 Design 531
Section 5A.04 Placement..... 533

CHAPTER 5B REGULATORY SIGNS

Section 5B.01 Introduction..... 534
Section 5B.02 STOP and YIELD Signs (R1-1 and R1-2)..... 534

Section 5B.03 Speed Limit Signs (R2 Series) ... 534
Section 5B.04 Traffic Movement and Prohibition Signs (R3, R4, R5, R6, R9, R10, R11, R12, R13, and R14 Series) ... 535
Section 5B.05 Parking Signs (R8 Series) ... 535
Section 5B.06 Other Regulatory Signs ... 535

CHAPTER 5C WARNING SIGNS

Section 5C.01 Introduction ... 536
Section 5C.02 Horizontal Alignment Signs (W1-1 through W1-8) ... 536
Section 5C.03 Intersection Warning Signs (W2-1 through W2-6) ... 537
Section 5C.04 Stop Ahead and Yield Ahead Signs (W3-1, W3-2) ... 537
Section 5C.05 NARROW BRIDGE Sign (W5-2) ... 537
Section 5C.06 ONE LANE BRIDGE Sign (W5-3) ... 537
Section 5C.07 Hill Sign (W7-1) ... 537
Section 5C.08 PAVEMENT ENDS Sign (W8-3) ... 537
Section 5C.09 Vehicular Traffic Warning and Non-Vehicular Warning Signs (W11 Series and W8-6) ... 537
Section 5C.10 Advisory Speed Plaque (W13-1P) ... 539
Section 5C.11 DEAD END or NO OUTLET Signs (W14-1, W14-1a, W14-2, W14-2a) ... 539
Section 5C.12 NO TRAFFIC SIGNS Sign (W18-1) ... 539
Section 5C.13 Other Warning Signs ... 539
Section 5C.14 Object Markers and Barricades ... 539

CHAPTER 5D GUIDE SIGNS

Section 5D.01 Introduction ... 540

CHAPTER 5E MARKINGS

Section 5E.01 Introduction ... 541
Section 5E.02 Center Line Markings ... 541
Section 5E.03 Edge Line Markings ... 541
Section 5E.04 Delineators ... 541
Section 5E.05 Other Markings ... 541

CHAPTER 5F TRAFFIC CONTROL FOR HIGHWAY-RAIL GRADE CROSSINGS

Section 5F.01 Introduction ... 542
Section 5F.02 Grade Crossing (Crossbuck) Sign and Number of Tracks Plaque (R15-1, R15-2P) ... 542
Section 5F.03 Grade Crossing Advance Warning Signs (W10 Series) ... 542
Section 5F.04 STOP and YIELD Signs (R1-1, R1-2) ... 543
Section 5F.05 Pavement Markings ... 543
Section 5F.06 Other Traffic Control Devices ... 543

CHAPTER 5G TEMPORARY TRAFFIC CONTROL ZONES

Section 5G.01 Introduction ... 544
Section 5G.02 Applications ... 544
Section 5G.03 Channelization Devices ... 544
Section 5G.04 Markings ... 545
Section 5G.05 Other Traffic Control Devices ... 545

CHAPTER 5H TRAFFIC CONTROL FOR SCHOOL AREAS

Section 5H.01 Introduction ... 546
Section 6F.14 SIDEWALK CLOSED Signs (R9-9, R9-10, R9-11, R9-11a) ... 586a
Section 6F.15 Special Regulatory Signs ... 587

PART 6 TEMPORARY TRAFFIC CONTROL

CHAPTER 6A GENERAL

Section 6A.01 General 547

CHAPTER 6B FUNDAMENTAL PRINCIPLES

Section 6B.01 Fundamental Principles of Temporary Traffic Control 549

CHAPTER 6C TEMPORARY TRAFFIC CONTROL ELEMENTS

Section 6C.01 Temporary Traffic Control Plans 551
Section 6C.02 Temporary Traffic Control Zones 552
Section 6C.03 Components of Temporary Traffic Control Zones 552
Section 6C.04 Advance Warning Area 552a
Section 6C.05 Transition Area 554
Section 6C.06 Activity Area 554
Section 6C.07 Termination Area 555
Section 6C.08 Tapers 555
Section 6C.09 Detours and Diversions 555
Section 6C.10 One-Lane, Two-Way Traffic Control 558
Section 6C.11 Traffic Regulator Method of One-Lane, Two-Way Traffic Control 558a
Section 6C.12 Flag Transfer Method of One-Lane, Two-Way Traffic Control 558a
Section 6C.13 Pilot Car Method of One-Lane, Two-Way Traffic Control 560
Section 6C.14 Temporary Traffic Control Signal Method of One-Lane, Two-Way Traffic Control 560
Section 6C.15 Stop or Yield Control Method of One-Lane, Two-Way Traffic Control 560

CHAPTER 6D PEDESTRIAN AND WORKER SAFETY

Section 6D.01 Pedestrian Considerations 561
Section 6D.02 Accessibility Considerations 563
Section 6D.03 Worker Safety Considerations 564

CHAPTER 6E TRAFFIC REGULATOR CONTROL

Section 6E.01 Qualifications for Traffic Regulator 566
Section 6E.02 High-Visibility Safety Apparel 566
Section 6E.03 Hand-Signaling Devices 566
Section 6E.04 Automated Flagger Assistance Devices 567
Section 6E.05 STOP/SLOW Automated Flagger Assistance Devices 569
Section 6E.06 Red/Yellow Lens Automated Flagger Assistance Devices 571
Section 6E.07 Traffic Regulator Procedures 573
Section 6E.08 Traffic Regulator Stations 575

CHAPTER 6F TEMPORARY TRAFFIC CONTROL ZONE DEVICES

Section 6F.01 Types of Devices 576
Section 6F.02 General Characteristics of Signs 576
Section 6F.03 Sign Placement 577
Section 6F.04 Sign Maintenance 583
Section 6F.05 Regulatory Sign Authority 583
Section 6F.06 Regulatory Sign Design 583
Section 6F.07 Regulatory Sign Applications 583
Section 6F.08 ROAD (STREET) CLOSED Sign (R11-2) 583
Section 6F.09 Local Traffic Only Signs (R11-3a, R11-4) 585
Section 6F.10 Weight Limit Signs (R12-1, R12-2, R12-5) 585
Section 6F.11 STAY IN LANE Sign (R4-9) 586
Section 6F.12 Work Zone and Higher Fines Signs and Plaques 586
Section 6F.13 PEDESTRIAN CROSSWALK Sign (R9-8) 586a
Section 6F.14 SIDEWALK CLOSED Signs (R9-9, R9-10, R9-11, R9-11a) 586a

Section 6F.15 Special Regulatory Signs 586b
Section 6F.16 Warning Sign Function, Design and Application 586b
Section 6F.17 Position of Advance Warning Signs 587
Section 6F.18 ROAD (STREET) WORK Sign (W20-1) 591
Section 6F.19 DETOUR Sign (W20-2) 591
Section 6F.20 ROAD (STREET) CLOSED Sign (W20-3) 591
Section 6F.21 ONE LANE ROAD Sign (W20-4) 591
Section 6F.22 Lane(s) Closed Signs (W20-5, W20-5a) 591
Section 6F.23 CENTER LANE CLOSED AHEAD Sign (W9-3) 592
Section 6F.24 Lane Ends Sign (W4-2) 592
Section 6F.25 ON RAMP Plaque (W13-4P) 592
Section 6F.26 RAMP NARROWS Sign (W5-4) 592
Section 6F.27 SLOW TRAFFIC AHEAD Sign (W23-1) 592
Section 6F.28 EXIT OPEN and EXIT CLOSED Signs (E5-2, E5-2a) 592
Section 6F.29 EXIT ONLY Sign (E5-3) 593
Section 6F.30 NEW TRAFFIC PATTERN AHEAD Sign (W23-2) 593
Section 6F.31 Traffic Regulator Signs (W20-7, W20-7a) 593
Section 6F.32 Two-Way Traffic Sign (W6-3) 593
Section 6F.33 Workers Signs (W21-1, W21-1a) 593
Section 6F.34 FRESH OIL (TAR) Sign (W21-2) 593
Section 6F.35 ROAD MACHINERY AHEAD Sign (W21-3) 593
Section 6F.36 Motorized Traffic Signs (W8-6, W11-10) 594
Section 6F.37 Shoulder Work Signs (W21-5, W21-5a, W21-5b) 594
Section 6F.38 SURVEY CREW Sign (W21-6) 594
Section 6F.39 UTILITY WORK Sign (W21-7) 594
Section 6F.40 Signs for Blasting Areas 594
Section 6F.41 BLASTING ZONE AHEAD Sign (W22-1) 595
Section 6F.42 TURN OFF 2-WAY RADIO AND CELL PHONE Sign (W22-2) 595
Section 6F.43 END BLASTING ZONE Sign (W22-3) 595
Section 6F.44 Shoulder Signs and Plaque (W8-4, W8-9, W8-17, and W8-17P) 595
Section 6F.45 UNEVEN LANES Sign (W8-11) 595
Section 6F.46 STEEL PLATE AHEAD Sign (W8-24) 595
Section 6F.47 NO CENTER LINE Sign (W8-12) 595
Section 6F.48 Reverse Curve Signs (W1-4 Series) 596
Section 6F.49 Double Reverse Curve Signs (W24-1 Series) 596
Section 6F.50 Other Warning Signs 596
Section 6F.51 Special Warning Signs 596
Section 6F.52 Advisory Speed Plaque (W13-1P) 596
Section 6F.53 Supplementary Distance Plaque (W7-3aP) 597
Section 6F.54 Motorcycle Plaque (W8-15P) 597
Section 6F.55 Guide Signs 597
Section 6F.56 ROAD WORK NEXT XX MILES Sign (G20-1) 597
Section 6F.57 END ROAD WORK Sign (G20-2) 598
Section 6F.58 PILOT CAR FOLLOW ME Sign (G20-4) 598
Section 6F.59 Detour Signs (M4-8, M4-8a, M4-8b, M4-9, M4-9a, M4-9b, M4-9c, and M4-10) 598
Section 6F.60 Portable Changeable Message Signs 598a
Section 6F.61 Arrow Boards 601
Section 6F.62 High-Level Warning Devices (Flag Trees) 603
Section 6F.63 Channelizing Devices 604
Section 6F.64 Cones 606
Section 6F.65 Tubular Markers 606
Section 6F.66 Vertical Panels 607
Section 6F.67 Drums 607

Section 6F.68 Type 1, 2, or 3 Barricades 607
Section 6F.69 Direction Indicator Barricades 609
Section 6F.70 Temporary Traffic Barriers as Channelizing Devices 609
Section 6F.71 Longitudinal Channelizing Devices 609
Section 6F.72 Temporary Lane Separators 610
Section 6F.73 Other Channelizing Devices 610
Section 6F.74 Detectable Edging for Pedestrians 610
Section 6F.75 Temporary Raised Islands 611
Section 6F.76 Opposing Traffic Lane Divider and Sign (W6-4) 611
Section 6F.77 Pavement Markings 612
Section 6F.78 Temporary Markings 612
Section 6F.79 Temporary Raised Pavement Markers 613
Section 6F.80 Delineators 613
Section 6F.81 Lighting Devices 614
Section 6F.82 Floodlights 614
Section 6F.83 Warning Lights 614
Section 6F.84 Temporary Traffic Control Signals 615
Section 6F.85 Temporary Traffic Barriers 616
Section 6F.86 Crash Cushions 617
Section 6F.87 Rumble Strips 618
Section 6F.88 Screens 618

CHAPTER 6G TYPE OF TEMPORARY TRAFFIC CONTROL ZONE ACTIVITIES

Section 6G.01 Typical Applications 619
Section 6G.02 Work Duration 619
Section 6G.03 Location of Work 621
Section 6G.04 Modifications To Fulfill Special Needs 621
Section 6G.05 Work Affecting Pedestrian and Bicycle Facilities 622
Section 6G.06 Work Outside of the Shoulder 622
Section 6G.07 Work on the Shoulder with No Encroachment 623
Section 6G.08 Work on the Shoulder with Minor Encroachment 624
Section 6G.09 Work Within the Median 624
Section 6G.10 Work Within the Traveled Way of a Two-Lane Highway 624
Section 6G.11 Work Within the Traveled Way of an Urban Street 625
Section 6G.12 Work Within the Traveled Way of a Multi-Lane, Non-Access Controlled Highway 625
Section 6G.13 Work Within the Traveled Way at an Intersection 626
Section 6G.14 Work Within the Traveled Way of a Freeway or Expressway 627
Section 6G.15 Two-Lane, Two-Way Traffic on One Roadway of a Normally Divided Highway 628
Section 6G.16 Crossovers 628
Section 6G.17 Interchanges 628
Section 6G.18 Work in the Vicinity of a Grade Crossing 629
Section 6G.19 Temporary Traffic Control During Nighttime Hours 629

CHAPTER 6H TYPICAL APPLICATIONS

Section 6H.01 Typical Applications 631

CHAPTER 6I CONTROL OF TRAFFIC THROUGH TRAFFIC INCIDENT MANAGEMENT AREAS

Section 6I.01 General 726
Section 6I.02 Major Traffic Incidents 727
Section 6I.03 Intermediate Traffic Incidents 728
Section 6I.04 Minor Traffic Incidents 728
Section 6I.05 Use of Emergency-Vehicle Lighting 729

PART 7 TRAFFIC CONTROL FOR SCHOOL AREAS

CHAPTER 7A GENERAL

Section 7A.01 Need for Standards ... 731
Section 7A.02 School Routes and Established School Crossings ... 731
Section 7A.03 School Crossing Control Criteria ... 731a
Section 7A.04 Scope ... 732

CHAPTER 7B SIGNS

Section 7B.01 Size of School Signs ... 733
Section 7B.02 Illumination and Reflectorization ... 734
Section 7B.03 Position of Signs ... 734
Section 7B.04 Height of Signs ... 734
Section 7B.05 Installation of Signs ... 734
Section 7B.06 Lettering ... 734
Section 7B.07 Sign Color for School Warning Signs ... 734
Section 7B.08 School Sign (S1-1) and Plaques ... 734
Section 7B.09 School Zone Sign (S1-1) and Plaques (S4-3P, S4-7P) and END SCHOOL ZONE Sign (S5-2) ... 736
Section 7B.10 Higher Fines Zone Signs (R2-10, R2-11, R2-11a) and Plaques ... 736
Section 7B.11 School Advance Crossing Assembly ... 736
Section 7B.12 School Crossing Assembly ... 741
Section 7B.13 School Bus Stop Ahead Sign (S3-1) ... 742
Section 7B.14 SCHOOL BUS TURN AHEAD Sign (S3-2) ... 742
Section 7B.15 School Speed Limit Assembly (S4-1P, S4-2P, S4-3P, S4-4P, S4-6P, S5-1) and END SCHOOL SPEED LIMIT Sign (S5-3) ... 742
Section 7B.16 Reduced School Speed Limit Ahead Sign (S4-5, S4-5a) ... 743
Section 7B.17 Parking and Stopping Signs (R7 and R8 Series) ... 743

CHAPTER 7C MARKINGS

Section 7C.01 Functions and Limitations ... 744
Section 7C.02 Crosswalk Markings ... 744
Section 7C.03 Pavement Word, Symbol, and Arrow Markings ... 744

CHAPTER 7D CROSSING SUPERVISION

Section 7D.01 Types of Crossing Supervision ... 745
Section 7D.02 Adult Crossing Guards ... 745
Section 7D.03 Qualifications of Adult Crossing Guards ... 745
Section 7D.04 Uniform of Adult Crossing Guards ... 745
Section 7D.05 Operating Procedures for Adult Crossing Guards ... 746
Section 7D.MI06 (Michigan) Student Patrols ... 746
Section 7D.MI07 (Michigan) Operating Procedures for Student Patrols ... 746

PART 8 TRAFFIC CONTROL FOR RAILROAD AND LIGHT RAIL TRANSIT GRADE CROSSINGS

CHAPTER 8A GENERAL

Section 8A.01 Introduction ... 747
Section 8A.02 Use of Standard Devices, Systems, and Practices at Highway-Rail Grade Crossings ... 748
Section 8A.03 Use of Standard Devices, Systems, and Practices at Highway-LRT Grade Crossings ... 748a
Section 8A.04 Uniform Provisions ... 749
Section 8A.05 Grade Crossing Elimination ... 749
Section 8A.06 Illumination at Grade Crossings ... 750
Section 8A.07 Quiet Zone Treatments at Highway-Rail Grade Crossings ... 750
Section 8A.08 Temporary Traffic Control Zones ... 750

CHAPTER 8B SIGNS AND MARKINGS

Section 8B.01 Purpose 751
Section 8B.02 Sizes of Grade Crossing Signs 751
Section 8B.03 Grade Crossing (Crossbuck) Sign (R15-1) and Number of Tracks Plaque (R15-2P) at Active and Passive Grade Crossings 751
Section 8B.04 Crossbuck Assemblies with YIELD or STOP Signs at Passive Grade Crossings 754
Section 8B.05 Use of STOP (R1-1) or YIELD (R1-2) Signs without Crossbuck Signs at Highway-LRT Grade Crossings 758
Section 8B.06 Grade Crossing Advance Warning Signs (W10 Series) 758
Section 8B.07 EXEMPT Grade Crossing Plaques (R15-3P, W10-1aP) 759
Section 8B.08 Turn Restrictions During Preemption 760
Section 8B.09 DO NOT STOP ON TRACKS Sign (R8-8) 760
Section 8B.10 TRACKS OUT OF SERVICE Sign (R8-9) 760
Section 8B.11 STOP HERE WHEN FLASHING Signs (R8-10, R8-10a) 761
Section 8B.12 STOP HERE ON RED Signs (R10-6, R10-6a) 761
Section 8B.13 Light Rail Transit Only Lane Signs (R15-4 Series) 761
Section 8B.14 Do Not Pass Light Rail Transit Signs (R15-5, R15-5a) 761
Section 8B.15 No Motor Vehicles On Tracks Signs (R15-6, R15-6a) 762
Section 8B.16 Divided Highway with Light Rail Transit Crossing Signs (R15-7 Series) 762
Section 8B.17 LOOK Sign (R15-8) 762
Section 8B.18 Emergency Notification Sign (I-13) 762
Section 8B.19 Light Rail Transit Approaching-Activated Blank-Out Warning Sign (W10-7) 763
Section 8B.20 TRAINS MAY EXCEED 80 MPH Sign (W10-8) 763
Section 8B.21 NO TRAIN HORN Sign or Plaque (W10-9, W10-9P) 763
Section 8B.22 NO GATES OR LIGHTS Plaque (W10-13P) 763
Section 8B.23 Low Ground Clearance Grade Crossing Sign (W10-5) 763
Section 8B.24 Storage Space Signs (W10-11, W10-11a, W10-11b) 764
Section 8B.25 Skewed Crossing Sign (W10-12) 764
Section 8B.26 Light Rail Transit Station Sign (I-12) 764
Section 8B.27 Pavement Markings 764
Section 8B.28 Stop and Yield Lines 766
Section 8B.29 Dynamic Envelope Markings 767
Section 8B.MI30 (Michigan) Stop On Red Signal Sign (R15-5) 768

CHAPTER 8C FLASHING-LIGHT SIGNALS, GATES, AND TRAFFIC CONTROL SIGNALS

Section 8C.01 Introduction 769
Section 8C.02 Flashing-Light Signals 769
Section 8C.03 Flashing-Light Signals at Highway-LRT Grade Crossings 772
Section 8C.04 Automatic Gates 772
Section 8C.05 Use of Automatic Gates at LRT Grade Crossings 773
Section 8C.06 Four-Quadrant Gate Systems 773
Section 8C.07 Wayside Horn Systems 775
Section 8C.08 Rail Traffic Detection 775
Section 8C.09 Traffic Control Signals at or Near Highway-Rail Grade Crossings 776
Section 8C.10 Traffic Control Signals at or Near Highway-LRT Grade Crossings 777
Section 8C.11 Use of Traffic Control Signals for Control of LRT Vehicles at Grade Crossings 778
Section 8C.12 Grade Crossings Within or In Close Proximity to Circular Intersections 780
Section 8C.13 Pedestrian and Bicycle Signals and Crossings at LRT Grade Crossings 780

CHAPTER 8D PATHWAY GRADE CROSSINGS

Section 8D.01 Purpose 786
Section 8D.02 Use of Standard Devices, Systems, and Practices 786
Section 8D.03 Pathway Grade Crossing Signs and Markings 786
Section 8D.04 Stop Lines, Edge Lines, and Detectable Warnings 786
Section 8D.05 Passive Devices for Pathway Grade Crossings 787
Section 8D.06 Active Traffic Control Systems for Pathway Grade Crossings 788

PART 9 TRAFFIC CONTROL FOR BICYCLE FACILITIES

CHAPTER 9A GENERAL

Section 9A.01 Requirements for Bicyclist Traffic Control Devices 789
Section 9A.02 Scope 789
Section 9A.03 Definitions Relating to Bicycles 789
Section 9A.04 Maintenance 789
Section 9A.05 Relation to Other Documents 789
Section 9A.06 Placement Authority 789
Section 9A.07 Meaning of Standard, Guidance, Option, and Support 789
Section 9A.08 Colors 789

CHAPTER 9B SIGNS

Section 9B.01 Application and Placement of Signs 790
Section 9B.02 Design of Bicycle Signs 790
Section 9B.03 STOP and YIELD Signs (R1-1, R1-2) 792
Section 9B.04 Bike Lane Signs and Plaques (R3-17, R3-17aP, R3-17bP) 794
Section 9B.05 BEGIN RIGHT TURN LANE YIELD TO BIKES Sign (R4-4) 794
Section 9B.06 Bicycles May Use Full Lane Sign (R4-11) 794
Section 9B.07 Bicycle WRONG WAY Sign and RIDE WITH TRAFFIC Plaque (R5-1b, R9-3cP) 794
Section 9B.08 NO MOTOR VEHICLES Sign (R5-3) 795
Section 9B.09 Selective Exclusion Signs 795
Section 9B.10 No Parking Bike Lane Signs (R7-9, R7-9a) 795
Section 9B.11 Bicycle Regulatory Signs (R9-5, R9-6, R10-4, R10-24, R10-25, and R10-26) 795
Section 9B.12 Shared-Use Path Restriction Sign (R9-7) 795
Section 9B.13 Bicycle Signal Actuation Sign (R10-22) 796
Section 9B.14 Other Regulatory Signs 796
Section 9B.15 Turn or Curve Warning Signs (W1 Series) 796
Section 9B.16 Intersection Warning Signs (W2 Series) 796
Section 9B.17 Bicycle Surface Condition Warning Sign (W8-10) 796
Section 9B.18 Bicycle Warning and Combined Bicycle/Pedestrian Signs (W11-1 and W11-15) 796
Section 9B.19 Other Bicycle Warning Signs 798
Section 9B.20 Bicycle Guide Signs (D1-1b, D1-1c, D1-2b, D1-2c, D1-3b, D1-3c, D11-1, D11-1c) 798
Section 9B.21 Bicycle Route Signs (M1-8, M1-8a, M1-9) 800
Section 9B.22 Bicycle Route Sign Auxiliary Plaques 802
Section 9B.23 Bicycle Parking Area Sign (D4-3) 804
Section 9B.24 Reference Location Signs (D10-1 through D10-3) and Intermediate Reference Location Signs (D10-1a through D10-3a) 804
Section 9B.25 Mode-Specific Guide Signs for Shared-Use Paths (D11-1a, D11-2, D11-3, D11-4) 805
Section 9B.26 Object Markers 805

CHAPTER 9C MARKINGS

Section 9C.01 Functions of Markings 806
Section 9C.02 General Principles 806
Section 9C.03 Marking Patterns and Colors on Shared-Use Paths 806
Section 9C.04 Markings For Bicycle Lanes 806
Section 9C.05 Bicycle Detector Symbol 810
Section 9C.06 Pavement Markings for Obstructions 810
Section 9C.07 Shared Lane Marking 810

CHAPTER 9D SIGNALS

Section 9D.01 Application 816
Section 9D.02 Signal Operations for Bicycles 816

APPENDIX A1. CONGRESSIONAL LEGISLATION A1-1
APPENDIX A2. METRIC CONVERSIONS A2-1

FIGURES

Page

Figure 1A-1 Process for Requesting and Conducting Experimentations for New Traffic Control Devices ... 5a
Figure 1A-2 Process for Incorporating New Traffic Control Devices into the MUTCD 8
Figure 2A-1 Examples of Enhanced Conspicuity for Signs 37
Figure 2A-2 Examples of Heights and Lateral Locations of Sign Installations 38
Figure 2A-3 Examples of Locations for Some Typical Signs at Intersections 39
Figure 2A-4 Relative Locations of Regulatory, Warning, and Guide Signs on an Intersection Approach.... 40
Figure 2B-1 STOP and YIELD Signs and Plaques 51
Figure 2B-2 Unsignalized Pedestrian Crosswalk Signs 55
Figure 2B-3 Speed Limit and Photo Enforcement Signs and Plaques 57
Figure 2B-4 Movement Prohibition and Lane Control Signs and Plaques 60
Figure 2B-5 Intersection Lane Control Sign Arrow Options for Roundabouts 62
Figure 2B-6 Center and Reversible Lane Control Signs and Plaques 65
Figure 2B-7 Location of Reversible Two-Way Left-Turn Signs 66
Figure 2B-8 Jughandle Regulatory Signs 68
Figure 2B-9 Examples of Applications of Jughandle Regulatory and Guide Signing 69
Figure 2B-10 Passing, Keep Right, and Slow Traffic Signs 72
Figure 2B-11 Selective Exclusion Signs 75
Figure 2B-12 Locations of Wrong-Way Signing for Divided Highways with Median Widths of 30 Feet or Wider 76
Figure 2B-13 ONE WAY and Divided Highway Crossing Signs 78
Figure 2B-14 Locations of ONE WAY Signs 79
Figure 2B-15 ONE WAY Signing for Divided Highways with Median Widths of 30 Feet or Wider 80
Figure 2B-16 ONE WAY Signing for Divided Highways with Median Widths Narrower Than 30 Feet 81
Figure 2B-17 ONE WAY Signing for Divided Highways with Median Widths Narrower Than 30 Feet and Separated Left-Turn Lanes 82
Figure 2B-18 Example of Application of Regulatory Signing and Pavement Markings at an Exit Ramp Termination to Deter Wrong-Way Entry 83
Figure 2B-19 Example of Application of Regulatory Signing and Pavement Markings at an Entrance Ramp Terminal Where the Design Does Not Clearly Indicate the Direction of Flow 83
Figure 2B-20 Roundabout Signs and Plaques 84
Figure 2B-21 Example of Regulatory and Warning Signs for a Mini-Roundabout 85
Figure 2B-22 Example of Regulatory and Warning Signs for a One-Lane Roundabout 86
Figure 2B-23 Example of Regulatory and Warning Signs for a Two-Lane Roundabout with Consecutive Double Lefts 87
Figure 2B-24 Parking and Standing Signs and Plaques (R7 Series) 88
Figure 2B-25 Parking and Stopping Signs and Plaques (R8 Series) 90
Figure 2B-26 Pedestrian Signs and Plaques 93
Figure 2B-27 Traffic Signal Signs and Plaques 96
Figure 2B-28 Ramp Metering Signs 97
Figure 2B-29 Road Closed and Weight Limit Signs 98
Figure 2B-30 Truck Signs 99a
Figure 2B-31 Headlight Use Signs 100
Figure 2B-32 Other Regulatory Signs and Symbols 101
Figure 2C-1 Horizontal Alignment Signs and Plaques 109
Figure 2C-2 Example of Warning Signs for a Turn 111

Figure 2C-3 Example of Advisory Speed Signing for an Exit Ramp 116
Figure 2C-4 Vertical Grade Signs and Plaques....117
Figure 2C-5 Miscellaneous Warning Signs 118
Figure 2C-6 Roadway and Weather Condition and Advance Traffic Control Signs and Plaques 121
Figure 2C-7 Reduced Speed Limit Ahead Signs 124
Figure 2C-8 Merging and Passing Signs and Plaques.... 125
Figure 2C-9 Intersection Warning Signs and Plaques 127
Figure 2C-10 Vehicular Traffic Warning Signs and Plaques 129
Figure 2C-11 Non-Vehicular Warning Signs 130
Figure 2C-12 Supplemental Warning Plaques 132
Figure 2C-13 Object Markers.... 135
Figure 2D-1 Examples of Color-Coded Destination Guide Signs.... 138
Figure 2D-2 Arrows for Use on Guide Signs 141
Figure 2D-3 Route Signs 143
Figure 2D-4 Route Sign Auxiliaries....145
Figure 2D-5 Advance Turn and Directional Arrow Auxiliary Signs....147
Figure 2D-6 Illustration of Directional Assemblies and Other Route Signs (for One Direction of Travel Only) 149
Figure 2D-7 Destination and Distance Signs 155
Figure 2D-8 Destination Signs for Roundabouts 158
Figure 2D-9 Examples of Guide Signs for Roundabouts 159
Figure 2D-10 Street Name and Parking Signs 162
Figure 2D-11 Example of Interchange Crossroad Signing for a One-Lane Approach 165
Figure 2D-12 Example of Minor Interchange Crossroad Signing 166
Figure 2D-13 Examples of Multi-Lane Crossroad Signing for a Diamond Interchange 167
Figure 2D-14 Examples of Multi-Lane Crossroad Signing for a Partial Cloverleaf Interchange 168
Figure 2D-15 Examples of Multi-Lane Crossroad Signing for a Cloverleaf Interchange.... 169
Figure 2D-16 Example of Crossroad Signing for an Entrance Ramp with a Nearby Frontage Road....170
Figure 2D-17 Example of Weigh Station Signing.... 173
Figure 2D-18 Examples of Community Wayfinding Guide Signs....174
Figure 2D-19 Example of a Community Wayfinding Guide Sign System Showing Direction from a Freeway or Expressway 175
Figure 2D-20 Example of a Color-Coded Community Wayfinding Guide Sign System....176
Figure 2D-21 Crossover, Truck Lane, and Slow Vehicle Signs 178
Figure 2D-22 Examples of Use of the National Scenic Byways Sign.... 180
Figure 2E-1 Example of Guide Sign Spreading.... 184
Figure 2E-2 Pull-Through Signs 184
Figure 2E-3 Overhead Arrow-per-Lane Guide Sign for a Multi-Lane Exit with an Option Lane 194
Figure 2E-4 Overhead Arrow-per-Lane Guide Signs for a Two-Lane Exit to the Right with an Option Lane 195
Figure 2E-5 Overhead Arrow-per-Lane Guide Signs for a Two-Lane Exit to the Right with an Option Lane (Through Lanes Curve to the Left) 196
Figure 2E-6 Overhead Arrow-per-Lane Guide Signs for a Split with an Option Lane 197
Figure 2E-7 Diagrammatic Guide Sign for a Multi-Lane Exit with an Option Lane.... 199
Figure 2E-8 Diagrammatic Guide Signs for a Two-Lane Exit to the Right with an Option Lane 200
Figure 2E-9 Diagrammatic Guide Signs for a Two-Lane Exit to the Right with an Option Lane (Through Lanes Curve to the Left).... 201
Figure 2E-10 Diagrammatic Guide Signs for a Split with an Option Lane.... 202
Figure 2E-11 Example of Signing for a Two-Lane Intermediate or Minor Interchange Exit with an Option Lane and a Dropped Lane.... 204
Figure 2E-12 Example of Signing for a Two-Lane Intermediate or Minor Interchange Exit with Option and Auxiliary Lanes 205
Figure 2E-13 EXIT ONLY and LEFT Sign Panels.... 206
Figure 2E-14 Guide Signs for a Split with Dedicated Lanes 207

Figure 2E-15 Guide Signs for a Single-Lane Exit to the Left with a Dropped Lane 208
Figure 2E-16 Guide Signs for a Single-Lane Exit to the Right with a Dropped Lane 209
Figure 2E-17 Interstate, Off-Interstate, and U.S. Route Signs 210
Figure 2E-18 Eisenhower Interstate System Signs 211
Figure 2E-19 Example of Interchange Numbering for Mainline and Circumferential Routes 213
Figure 2E-20 Example of Interchange Numbering for Mainline, Loop, and Spur Routes 214
Figure 2E-21 Example of Interchange Numbering for Overlapping Routes 215
Figure 2E-22 Examples of Interchange Advance Guide Signs, Exit Number Plaques, and LEFT Plaque ... 217
Figure 2E-23 Next Exit Plaques 218
Figure 2E-24 Supplemental Guide Sign for a Multi-Exit Interchange 219
Figure 2E-25 Supplemental Guide Sign for a Park – Ride Facility 219
Figure 2E-26 Examples of Interchange Exit Direction Signs 220
Figure 2E-27 Interchange Exit Direction Sign with an Advisory Speed Panel 221
Figure 2E-28 Exit Gore Signs 222
Figure 2E-29 Post-Interchange Distance Sign 223
Figure 2E-30 Example of Using an Interchange Sequence Sign for Closely-Spaced Interchanges 224
Figure 2E-31 Interchange Sequence Sign 225
Figure 2E-32 Community Interchanges Identification Sign 225
Figure 2E-33 NEXT EXITS Sign 225
Figure 2E-34 Examples of Guide Signs for a Freeway-to-Freeway Interchange 227
Figure 2E-35 Examples of Guide Signs for a Full Cloverleaf Interchange 229
Figure 2E-36 Examples of Guide Signs for a Full Cloverleaf Interchange with Collector-Distributor Roadways 231
Figure 2E-37 Examples of Guide Signs for a Partial Cloverleaf Interchange 232
Figure 2E-38 Examples of Guide Signs for a Diamond Interchange 233
Figure 2E-39 Examples of Guide Signs for a Diamond Interchange in an Urban Area 235
Figure 2E-40 Examples of Guide Signs for a Minor Interchange 236
Figure 2F-1 Examples of ETC Account Pictographs and Use of Purple Backgrounds and Underlay Panels 239
Figure 2F-2 Toll Plaza Regulatory Signs and Plaques 240
Figure 2F-3 Toll Plaza Warning Signs and Plaques 241
Figure 2F-4 ETC Account-Only Auxiliary Signs for Use in Route Sign Assemblies 243
Figure 2F-5 Examples of Guide Signs for Entrances to Toll Highways or Ramps 245
Figure 2F-6 Examples of Guide Signs for the Entrance to a Toll Highway on which Tolls are Collected Electronically Only 246
Figure 2F-7 Examples of Guide Signs for Alternative Toll and Non-Toll Ramp Connections to a Non-Toll Highway 247
Figure 2F-8 Examples of Conventional Toll Plaza Advance Signs 248
Figure 2F-9 Examples of Toll Plaza Canopy Signs 248
Figure 2F-10 Examples of Mainline Toll Plaza Approach and Canopy Signing 250
Figure 2F-11 Examples of Guide Signs for a Mainline Toll Plaza on a Diverging Alignment from Open-Road ETC Lanes 251
Figure 2G-1 Preferential Lane Regulatory Signs and Plaques 255
Figure 2G-2 Example of Signing for an Added Continuous-Access Contiguous or Buffer-Separated HOV Lane 261
Figure 2G-3 Example of Signing for a General-Purpose Lane that Becomes a Continuous-Access Contiguous or Buffer-Separated HOV Lane 262
Figure 2G-4 Examples of Warning Signs and Plaques Applicable Only to Preferential Lanes 264
Figure 2G-5 Example of an Overhead Advance Guide Sign for a Preferential Lane Entrance 267
Figure 2G-6 Examples of Overhead or Post-Mounted Preferential Lane Entrance Direction Signs 267
Figure 2G-7 Entrance Gore Signs for Barrier-Separated Preferential Lanes 268
Figure 2G-8 Example of Signing for an Entrance to Access-Restricted HOV Lanes 269
Figure 2G-9 Example of Signing for an Intermediate Entry to a Barrier- or Buffer-Separated HOV Lane 271

Figure 2G-10 Example of Signing for the Intermediate Entry to, Egress from, and End of Access-Restricted HOV Lanes ... 272
Figure 2G-11 Examples of Barrier-Mounted Guide Signs for an Intermediate Egress from Preferential Lanes ... 273
Figure 2G-12 Examples of Guide Signs for an Intermediate Egress from a Barrier- or Buffer-Separated HOV Lane ... 274
Figure 2G-13 Example of Signing for a Direct Entrance Ramp to an HOV Lane from a Park-and-Ride Facility and a Local Street ... 275
Figure 2G-14 Exit Gore Sign for a Direct Exit from a Preferential Lane ... 276
Figure 2G-15 Examples of Guide Signs for Direct HOV Lane Entrance and Exit Ramps ... 277
Figure 2G-16 Examples of Guide Signs for a Direct Access Ramp between HOV Lanes on Separate Freeways ... 278
Figure 2G-17 Regulatory Signs for Managed Lanes ... 280
Figure 2G-18 Examples of Guide Signs for Entrances to Priced Managed Lanes ... 281
Figure 2G-19 Example of an Exit Destinations Sign for a Managed Lane ... 282
Figure 2G-20 Example of a Comparative Travel Time Information Sign for Preferential or Managed Lanes ... 282
Figure 2G-21 Example of Signing for the Entrance to an Access-Restricted Priced Managed Lane ... 283
Figure 2G-22 Example of Signing for the Entrance to an Access-Restricted Priced Managed Lane Where a General-Purpose Lane Becomes the Managed Lane ... 284
Figure 2G-23 Example of Signing for an Intermediate Entry to a Barrier- or Buffer-Separated Priced Managed Lane ... 285
Figure 2G-24 Example of Signing for the Intermediate Entry to, Egress from, and End of Access-Restricted Priced Managed Lanes ... 286
Figure 2G-25 Examples of Guide Signs for an Intermediate Egress from a Barrier- or Buffer-Separated HOV Lane ... 287
Figure 2G-26 Examples of Guide Signs for Direct Managed Lane Entrance and Exit Ramps ... 288
Figure 2G-27 Examples of Guide Signs for a Direct Access Ramp between Managed Lanes on Separate Freeways ... 289
Figure 2G-28 Examples of Guide Signs for a Direct Entrance Ramp to a Priced Managed Lane and Trailblazing to a Nearby Entrance to the General-Purpose Lanes ... 290
Figure 2G-29 Examples of Guide Signs for Separate Entrance Ramps to General-Purpose and Priced Managed Lanes from the Same Crossroad ... 291
Figure 2H-1 General Information and Miscellaneous Information Signs ... 293
Figure 2H-2 Reference Location Signs ... 295
Figure 2H-3 Intermediate Reference Location Signs ... 295
Figure 2H-4 Enhanced Reference Location Signs ... 296
Figure 2H-5 Examples of Acknowledgment Sign Designs ... 298
Figure 2I-1 General Service Signs and Plaques ... 301
Figure 2I-2 Example of Next Services Plaque ... 302
Figure 2I-3 Examples of General Service Signs with and without Exit Numbering ... 304
Figure 2I-4 Examples of Interstate Oasis Signs and Plaques ... 306
Figure 2I-5 Rest Area and Other Roadside Area Signs ... 307
Figure 2I-6 Brake Check Area and Chain-Up Area Signs ... 308
Figure 2I-7 Examples of Tourist Information and Welcome Center Signs ... 309
Figure 2I-8 Radio, Telephone, and Carpool Information Signs ... 310
Figure 2J-1 Examples of Specific Service Signs ... 314
Figure 2J-2 Examples of Specific Service Sign Locations ... 315
Figure 2J-3 Examples of Supplemental Messages on Logo Sign Panels ... 316
Figure 2J-4 Examples of RV Access Supplemental Messages on Logo Sign Panels ... 316
Figure 2J-5 Examples of Specific Service Trailblazer Signs ... 319
Figure 2K-1 Examples of Tourist-Oriented Directional Signs ... 321
Figure 2K-2 Examples of Intersection Approach Signs and Advance Signs for Tourist-Oriented Directional Signs ... 322

Figure 2M-1 Examples of Use of Arrows, Educational Plaques, and Prohibitory Slashes 333
Figure 2M-2 Examples of Recreational and Cultural Interest Area Guide Signs 334
Figure 2M-3 Arrangement, Height, and Lateral Position of Signs Located Within Recreational and Cultural Interest Areas 335
Figure 2M-4 Examples of Symbol and Destination Guide Signing Layout 336
Figure 2M-5 Recreational and Cultural Interest Area Symbol Signs for General Applications 337
Figure 2M-6 Recreational and Cultural Interest Area Symbol Signs for Accommodations 338
Figure 2M-7 Recreational and Cultural Interest Area Symbol Signs for Services 338
Figure 2M-8 Recreational and Cultural Interest Area Symbol Signs for Land Recreation 339
Figure 2M-9 Recreational and Cultural Interest Area Symbol Signs for Water Recreation 340
Figure 2M-10 Recreational and Cultural Interest Area Symbol Signs for Winter Recreation 341
Figure 2N-1 Emergency Management Signs 343
Figure 3B-1 Examples of Two-Lane, Two-Way Marking Applications 350
Figure 3B-2 Examples of Four-or-More Lane, Two-Way Marking Applications 351
Figure 3B-3 Examples of Three-Lane, Two-Way Marking Applications 352
Figure 3B-4 Method of Locating and Determining the Limits of No-Passing Zones at Curves 353
Figure 3B-5 Example of Application of Three-Lane, Two-Way Marking for Changing Direction of the Center Lane 355
Figure 3B-6 Example of Reversible Lane Marking Application 356
Figure 3B-7 Example of Two-Way Left-Turn Lane Marking Applications 357
Figure 3B-8 Examples of Dotted Line and Channelizing Line Applications for Exit Ramp Markings 358
Figure 3B-9 Examples of Dotted Line and Channelizing Line Applications for Entrance Ramp Markings 360
Figure 3B-10 Examples of Applications of Freeway and Expressway Lane-Drop Markings 363
Figure 3B-11 Examples of Applications of Conventional Road Lane-Drop Markings 368
Figure 3B-12 Example of Solid Double White Lines Used to Prohibit Lane Changing 370
Figure 3B-13 Examples of Line Extensions through Intersections 372
Figure 3B-14 Examples of Applications of Lane-Reduction Transition Markings 375
Figure 3B-15 Examples of Applications of Markings for Obstructions in the Roadway 377
Figure 3B-16 Recommended Yield Line Layouts 382
Figure 3B-17 Examples of Yield Lines at Unsignalized Midblock Crosswalks 383
Figure 3B-18 Do Not Block Intersection Markings 384
Figure 3B-19 Examples of Crosswalk Markings 384
Figure 3B-20 Example of Crosswalk Markings for an Exclusive Pedestrian Phase that Permits Diagonal Crossing 385
Figure 3B-21 Examples of Parking Space Markings 386
Figure 3B-22 International Symbol of Accessibility Parking Space Marking 387
Figure 3B-23 Example of Elongated Letters for Word Pavement Markings 387
Figure 3B-24 Examples of Standard Arrows for Pavement Markings 388
Figure 3B-25 Examples of Elongated Route Shields for Pavement Markings 390
Figure 3B-26 Yield Ahead Triangle Symbols 391
Figure 3B-27 Examples of Lane-Use Control Word and Arrow Pavement Markings 392
Figure 3B-28 Example of the Application of Speed Reduction Markings 394
Figure 3B-29 Pavement Markings for Speed Humps without Crosswalks 396
Figure 3B-30 Pavement Markings for Speed Tables or Speed Humps with Crosswalks 397
Figure 3B-31 Advance Warning Markings for Speed Humps 398
Figure 3C-1 Example of Markings for Approach and Circulatory Roadways at a Roundabout 399
Figure 3C-2 Lane-Use Arrow Pavement Marking Options for Roundabout Approaches 400
Figure 3C-3 Example of Markings for a One-Lane Roundabout 400
Figure 3C-4 Example of Markings for a Two-Lane Roundabout with One- and Two-Lane Approaches 401
Figure 3C-5 Example of Markings for a Two-Lane Roundabout with One-Lane Exits 403
Figure 3C-6 Example of Markings for a Two-Lane Roundabout with Two-Lane Exits 404
Figure 3C-7 Example of Markings for a Two-Lane Roundabout with a Double Left Turn 405
Figure 3C-8 Example of Markings for a Two-Lane Roundabout with a Double Right Turn 406

Figure 3C-9 Example of Markings for a Two-Lane Roundabout with Consecutive Double Lefts 407
Figure 3C-10 Example of Markings for a Three-Lane Roundabout with Two- and Three-Lane Approaches 408
Figure 3C-11 Example of Markings for a Three-Lane Roundabout with Three-Lane Approaches 409
Figure 3C-12 Example of Markings for a Three-Lane Roundabout with Two-Lane Exits 410
Figure 3C-13 Example of Markings for Two Linked Roundabouts 411
Figure 3C-14 Example of Markings for a Diamond Interchange with Two Circular-Shaped Roundabout Ramp Terminals 412
Figure 3D-1 Markings for Barrier-Separated Preferential Lanes 418
Figure 3D-2 Markings for Buffer-Separated Preferential Lanes 418
Figure 3D-3 Markings for Contiguous Preferential Lanes 420
Figure 3D-4 Markings for Counter-Flow Preferential Lanes on Divided Highways 422
Figure 3F-1 Examples of Delineator Placement 425
Figure 3J-1 Examples of Longitudinal Rumble Strip Markings 432
Figure 4C-1 Warrant 2, Four-Hour Vehicular Volume 440
Figure 4C-2 Warrant 2, Four-Hour Vehicular Volume (70% Factor) 440
Figure 4C-3 Warrant 3, Peak Hour 441
Figure 4C-4 Warrant 3, Peak Hour (70% Factor) 441
Figure 4C-5 Warrant 4, Pedestrian Four-Hour Volume 443
Figure 4C-6 Warrant 4, Pedestrian Four-Hour Volume (70% Factor) 443
Figure 4C-7 Warrant 4, Pedestrian Peak Hour 444
Figure 4C-8 Warrant 4, Pedestrian Peak Hour (70% Factor) 444
Figure 4C-9 Warrant 9, Intersection Near a Grade Crossing (One Approach Lane at the Track Crossing) 447
Figure 4C-10 Warrant 9, Intersection Near a Grade Crossing (Two or More Approach Lanes at the Track Crossing) 447
Figure 4D-1 Example of U-Turn Signal Face 456
Figure 4D-2 Typical Arrangements of Signal Sections in Signal Faces That Do Not Control Turning Movements 458
Figure 4D-3 Recommended Vehicular Signal Faces for Approaches with Posted, Statutory, or 85th-Percentile Speed of 45 mph or Higher 460
Figure 4D-4 Lateral and Longitudinal Location of Primary Signal Faces 463
Figure 4D-5 Maximum Mounting Height of Signal Faces Located Between 40 Feet and 53 Feet from Stop Line 465
Figure 4D-6 Typical Position and Arrangements of Shared Signal Faces for Permissive Only Mode Left Turns 467
Figure 4D-7 Typical Position and Arrangements of Separate Signal Faces with Flashing Yellow Arrow for Permissive Only Mode Left Turns 468
Figure 4D-8 Typical Position and Arrangements of Separate Signal Faces with Flashing Red Arrow for Permissive Only Mode and Protected/Permissive Mode Left Turns - Deleted 469
Figure 4D-9 Typical Positions and Arrangements of Shared Signal Faces for Protected Only Mode Left Turns 470
Figure 4D-10 Typical Position and Arrangements of Separate Signal Faces for Protected Only Mode Left Turns 471
Figure 4D-11 Typical Position and Arrangements of Shared Signal Faces for Protected/Permissive Mode Left Turns 472
Figure 4D-12 Typical Position and Arrangements of Separate Signal Faces with Flashing Yellow Arrow for Protected/Permissive Mode and Protected Only Mode Left Turns 473
Figure 4D-13 Typical Positions and Arrangements of Shared Signal Faces for Permissive Only Mode Right Turns 476
Figure 4D-14 Typical Position and Arrangements of Separate Signal Faces with Flashing Yellow Arrow for Permissive Only Mode Right Turns 477
Figure 4D-15 Typical Position and Arrangements of Separate Signal Faces with Flashing Red Arrow for Permissive Only Mode and Protected/Permissive Mode Right Turns 478

Figure 4D-16 Typical Positions and Arrangements of Shared Signal Faces for Protected Only Mode Right Turns ... 479
Figure 4D-17 Typical Position and Arrangements of Separate Signal Faces for Protected Only Mode Right Turns ... 480
Figure 4D-18 Typical Positions and Arrangements of Shared Signal Faces for Protected/Permissive Mode Right Turns ... 481
Figure 4D-19 Typical Position and Arrangements of Separate Signal Faces with Flashing Yellow Arrow for Protected/Permissive Mode and Protected Only Mode Right Turns ... 482
Figure 4D-20 Signal Indications for Approaches with a Shared Left-Turn/Right-Turn Lane and No Through Movement ... 486
Figure 4E-1 Typical Pedestrian Signal Indications ... 496
Figure 4E-2 Pedestrian Intervals ... 498
Figure 4E-3 Pushbutton Location Area ... 501
Figure 4E-4 Typical Pushbutton Locations ... 502
Figure 4F-1 Guidelines for the Installation of Pedestrian Hybrid Beacons on Low-Speed Roadways ... 510
Figure 4F-2 Guidelines for the Installation of Pedestrian Hybrid Beacons on High-Speed Roadways ... 510
Figure 4F-3 Sequence for a Pedestrian Hybrid Beacon ... 511
Figure 4G-1 Sequence for an Emergency-Vehicle Hybrid Beacon ... 515
Figure 4M-1 Left-Turn Lane-Use Control Signals ... 526
Figure 5B-1 Regulatory Signs on Low-Volume Roads ... 534
Figure 5B-2 Parking Signs and Plaques on Low-Volume Roads ... 535
Figure 5C-1 Horizontal Alignment and Intersection Warning Signs and Plaques and Object Markers on Low-Volume Roads ... 536
Figure 5C-2 Other Warning Signs and Plaques on Low-Volume Roads ... 538
Figure 5F-1 Highway-Rail Grade Crossing Signs and Plaques for Low-Volume Roads ... 542
Figure 5G-1 Temporary Traffic Control Signs and Plaques on Low-Volume Roads ... 545
Figure 6C-1 Component Parts of a Temporary Traffic Control Zone ... 553
Figure 6C-2 Types of Tapers and Buffer Spaces ... 556
Figure 6C-3 Example of a One-Lane, Two-Way Traffic Taper ... 559
Figure 6E-1 Example of the Use of a STOP/SLOW Automated Flagger Assistance Device (AFAD) ... 570
Figure 6E-2 Example of the Use of a Red/Yellow Lens Automated Flagger Assistance Device (AFAD) ... 572
Figure 6E-3 Use of Hand-Signaling Devices by Traffic Regulators ... 574
Figure 6F-1 Height and Lateral Location of Signs on Posts—Typical Installations ... 581
Figure 6F-2 Methods of Mounting Signs Other Than on Posts ... 582
Figure 6F-3 Regulatory Signs and Plaques in Temporary Traffic Control Zones ... 584
Figure 6F-4 Warning Signs and Plaques in Temporary Traffic Control Zones ... 588
Figure 6F-5 Exit Open and Closed and Detour Signs ... 592
Figure 6F-6 Advance Warning Arrow Board Display Specifications ... 602
Figure 6F-7 Channelizing Devices ... 605
Figure 6H-1 Work Beyond the Shoulder (TA-1) ... 635
Figure 6H-2 Blasting Zone (TA-2) ... 637
Figure 6H-3 Work on the Shoulders (TA-3) ... 639
Figure 6H-4 Short-Duration or Mobile Operation on a Shoulder (TA-4) ... 641
Figure 6H-5 Shoulder Closure on a Freeway (TA-5) ... 643
Figure 6H-6 Shoulder Work with Minor Encroachment (TA-6) ... 645
Figure 6H-7 Road Closure with a Diversion (TA-7) ... 647
Figure 6H-8 Road Closure with an Off-Site Detour (TA-8) ... 649
Figure 6H-9 Overlapping Routes with a Detour (TA-9) ... 651
Figure 6H-10 Lane Closure on a Two-Lane Road Using Traffic Regulators (TA-10) ... 653
Figure 6H-11 Lane Closure on a Two-Lane Road with Low Traffic Volumes (TA-11) ... 655
Figure 6H-12 Lane Closure on a Two-Lane Road Using Traffic Control Signals (TA-12) ... 657
Figure 6H-13 Temporary Road Closure (TA-13) ... 659
Figure 6H-14 Haul Road Crossing (TA-14) ... 661
Figure 6H-15 Work in the Center of a Road with Low Traffic Volumes (TA-15) ... 663

Figure 6H-16 Surveying Along the Center Line of a Road with Low Traffic Volumes (TA-16) 665
Figure 6H-17 Mobile Operations on a Two-Lane Road (TA-17) 667
Figure 6H-18 Lane Closure on a Minor Street (TA-18) 669
Figure 6H-19 Detour for One Travel Direction (TA-19) 671
Figure 6H-20 Detour for a Closed Street (TA-20) 673
Figure 6H-21 Lane Closure on the Near Side of an Intersection (TA-21) 675
Figure 6H-22 Right-Hand Lane Closure on the Far Side of an Intersection (TA-22) 677
Figure 6H-23 Left-Hand Lane Closure on the Far Side of an Intersection (TA-23) 679
Figure 6H-24 Half Road Closure on the Far Side of an Intersection (TA-24) 681
Figure 6H-25 Multiple Lane Closures at an Intersection (TA-25) 683
Figure 6H-26 Closure in the Center of an Intersection (TA-26) 685
Figure 6H-27 Closure at the Side of an Intersection (TA-27) 687
Figure 6H-28 Sidewalk Detour or Diversion (TA-28) 689
Figure 6H-29 Crosswalk Closures and Pedestrian Detours (TA-29) 691
Figure 6H-30 Interior Lane Closure on a Multi-Lane Street (TA-30) 693
Figure 6H-31 Lane Closures on a Street with Uneven Directional Volumes (TA-31) 695
Figure 6H-32 Half Road Closure on a Multi-Lane, High-Speed Highway (TA-32) 697
Figure 6H-33 Stationary Lane Closure on a Divided Highway (TA-33) 699
Figure 6H-34 Lane Closure with a Temporary Traffic Barrier (TA-34) 701
Figure 6H-35 Mobile Operation on a Multi-Lane Road (TA-35) 703
Figure 6H-36 Lane Shift on a Freeway (TA-36) 705
Figure 6H-37 Double Lane Closure on a Freeway (TA-37) 707
Figure 6H-38 Interior Lane Closure on a Freeway (TA-38) 709
Figure 6H-39 Median Crossover on a Freeway (TA-39) 711
Figure 6H-40 Median Crossover for an Entrance Ramp (TA-40) 713
Figure 6H-41 Median Crossover for an Exit Ramp (TA-41) 715
Figure 6H-42 Work in the Vicinity of an Exit Ramp (TA-42) 717
Figure 6H-43 Partial Exit Ramp Closure (TA-43) 719
Figure 6H-44 Work in the Vicinity of an Entrance Ramp (TA-44) 721
Figure 6H-45 Temporary Reversible Lane Using Movable Barriers (TA-45) 723
Figure 6H-46 Work in the Vicinity of a Grade Crossing (TA-46) 725
Figure 6I-1 Examples of Traffic Incident Management Area Signs 727
Figure 7A-1 Example of School Route Plan Map 732
Figure 7B-1 School Area Signs 735
Figure 7B-2 Example of Signing for a Higher Fines School Zone without a School Crossing 737
Figure 7B-3 Example of Signing for a Higher Fines School Zone with a School Speed Limit 738
Figure 7B-4 Example of Signing for a School Crossing Not Next to a School 739
Figure 7B-5 Example of Signing for a School Zone with a School Speed Limit and a School Crossing 740
Figure 7B-6 In-Street Signs in School Areas 741
Figure 7C-1 Two-Lane Pavement Marking of “SCHOOL” 744
Figure 8B-1 Regulatory Signs and Plaques for Grade Crossings 753
Figure 8B-2 Crossbuck Assembly with a YIELD or STOP Sign on the Crossbuck Sign Support 754
Figure 8B-3 Crossbuck Assembly with a YIELD or STOP Sign on a Separate Sign Support 755
Figure 8B-4 Warning Signs and Plaques for Grade Crossings 759
Figure 8B-5 Example of an Emergency Notification Sign 762
Figure 8B-6 Example of Placement of Warning Signs and Pavement Markings at Grade Crossings 765
Figure 8B-7 Grade Crossing Pavement Markings 766
Figure 8B-8 Example of Dynamic Envelope Pavement Markings at Grade Crossings 767
Figure 8B-9 Examples of Light Rail Transit Vehicle Dynamic Envelope Markings for Mixed-Use Alignments 768
Figure 8C-1 Composite Drawing of Active Traffic Control Devices for Grade Crossings Showing Clearances 770
Figure 8C-2 Example of Location Plan for Flashing-Light Signals and Four-Quadrant Gates 774
Figure 8C-3 Light Rail Transit Signals 779

Figure 8C-4 Example of Flashing-Light Signal Assembly for Pedestrian Crossings 781
Figure 8C-5 Example of a Shared Pedestrian/Roadway Gate 782
Figure 8C-6 Example of a Separate Pedestrian Gate 782
Figure 8C-7 Examples of Placement of Pedestrian Gates 783
Figure 8C-8 Example of Swing Gates 784
Figure 8C-9 Example of Pedestrian Barriers at an Offset Grade Crossing 784
Figure 8C-10 Examples of Pedestrian Barrier Installation at an Offset Non-Intersection Grade Crossing ... 785
Figure 8D-1 Example of Signing and Markings for a Pathway Grade Crossing 787
Figure 9B-1 Sign Placement on Shared-Use Paths 790
Figure 9B-2 Regulatory Signs and Plaques for Bicycle Facilities 793
Figure 9B-3 Warning Signs and Plaques and Object Markers for Bicycle Facilities 797
Figure 9B-4 Guide Signs and Plaques for Bicycle Facilities 799
Figure 9B-5 Example of Signing for the Beginning and End of a Designated Bicycle Route on a Shared-Use Path 801
Figure 9B-6 Example of Bicycle Guide Signing 802
Figure 9B-7 Examples of Signing and Markings for a Shared-Use Path Crossing 803
Figure 9B-8 Example of Mode-Specific Guide Signing on a Shared-Use Path 805
Figure 9C-1 Example of Intersection Pavement Markings—Designated Bicycle Lane with Left-Turn Area, Heavy Turn Volumes, Parking, One-Way Traffic, or Divided Highway 807
Figure 9C-2 Examples of Center Line Markings for Shared-Use Paths 808
Figure 9C-3 Word, Symbol, and Arrow Pavement Markings for Bicycle Lanes 809
Figure 9C-4 Example of Bicycle Lane Treatment at a Right Turn Only Lane 811
Figure 9C-5 Example of Bicycle Lane Treatment at Parking Lane into a Right Turn Only Lane 812
Figure 9C-6 Example of Pavement Markings for Bicycle Lanes on a Two-Way Street 813
Figure 9C-7 Bicycle Detector Pavement Marking 814
Figure 9C-8 Examples of Obstruction Pavement Markings 815
Figure 9C-9 Shared Lane Marking 815

TABLES

Page

Table I-1 Evolution of the MUTCD I-2
Table I-1a History of the MMUTCD I-3
Table I-2 Target Compliance Dates Established by the FHWA I-5
Table 1A-1 Acceptable Abbreviations 25
Table 1A-2 Abbreviations that Shall be Used Only on Portable Changeable Message Signs 25a
Table 1A-3 Unacceptable Abbreviations 25a
Table 2A-1 Illumination of Sign Elements 29
Table 2A-2 Retroreflection of Sign Elements 29
Table 2A-3 Minimum Maintained Retroreflectivity Levels 31
Table 2A-4 Use of Sign Shapes 32
Table 2A-5 Common Uses of Sign Colors 33
Table 2B-1 Regulatory Sign and Plaque Sizes 46
Table 2B-2 Meanings of Symbols and Legends on Reversible Lane Control Signs 65
Table 2C-1 Categories of Warning Signs and Plaques 104
Table 2C-2 Warning Sign and Plaque Sizes 105
Table 2C-3 Minimum Size of Supplemental Warning Plaques 107
Table 2C-4 Guidelines for Advance Placement of Warning Signs 108
Table 2C-5 Horizontal Alignment Sign Selection 110
Table 2C-6 Approximate Spacing of Chevron Alignment Signs on Horizontal Curves 113
Table 2D-1 Conventional Road Guide Sign Sizes 139
Table 2D-2 Recommended Minimum Letter Heights on Street Name Signs 163
Table 2E-1 Freeway or Expressway Guide Sign and Plaque Sizes 186

Table 2E-2 Minimum Letter and Numeral Sizes for Expressway Guide Signs According to Interchange Classification 188
Table 2E-3 Minimum Letter and Numeral Sizes for Expressway Guide Signs According to Sign Type .. 189
Table 2E-4 Minimum Letter and Numeral Sizes for Freeway Guide Signs According to Interchange Classification 190
Table 2E-5 Minimum Letter and Numeral Sizes for Freeway Guide Signs According to Sign Type 191
Table 2F-1 Toll Facility Sign and Plaque Minimum Sizes 237
Table 2G-1 Managed and Preferential Lanes Sign and Plaque Minimum Sizes 254
Table 2H-1 General Information Sign Sizes 292
Table 2I-1 General Service Sign and Plaque Sizes 299
Table 2J-1 Minimum Letter and Numeral Sizes for Specific Service Signs According to Sign Type 316
Table 2L-1 Example of Units of Information 328
Table 2M-1 Category Chart for Recreational and Cultural Interest Area Symbols 331
Table 2N-1 Emergency Management Sign Sizes 343
Table 3B-1 Minimum Passing Sight Distances for No-Passing Zone Markings 352
Table 3D-1 Standard Edge Line and Lane Line Markings for Preferential Lanes 417
Table 3F-1 Approximate Spacing for Delineators on Horizontal Curves 427
Table 4C-1 Warrant 1, Eight-Hour Vehicular Volume 438
Table 4C-2 Warrant 9, Adjustment Factor for Daily Frequency of Rail Traffic 448
Table 4C-3 Warrant 9, Adjustment Factor for Percentage of High-Occupancy Buses 448
Table 4C-4 Warrant 9, Adjustment Factor for Percentage of Tractor-Trailer Trucks 448
Table 4D-1 Recommended Minimum Number of Primary Signal Faces for Through Traffic on Approaches with Posted, Statutory, or 85th-Percentile Speed of 45 mph or Higher 461
Table 4D-2 Minimum Sight Distance for Signal Visibility 461
Table 5A-1 Sign and Plaque Sizes on Low-Volume Roads 532
Table 6C-1 Recommended Advance Warning Sign Minimum Spacing 554
Table 6C-2 Stopping Sight Distance as a Function of Speed 555
Table 6C-3 Taper Length Criteria for Temporary Traffic Control Zones 557
Table 6C-4 Formulas for Determining Taper Length 557
Table 6E-1 Stopping Sight Distance as a Function of Speed 575
Table 6F-1 Temporary Traffic Control Zone Sign and Plaque Sizes 578
Table 6H-1 Index to Typical Applications 632
Table 6H-2 Meaning of Symbols on Typical Application Diagrams 633
Table 6H-3 Meaning of Letter Codes on Typical Application Diagrams 633
Table 6H-4 Formulas for Determining Taper Length 633
Table 7B-1 School Area Sign and Plaque Sizes 733
Table 8B-1 Grade Crossing Sign and Plaque Minimum Sizes 752
Table 9B-1 Bicycle Facility Sign and Plaque Minimum Sizes 791
Table A2-1 Conversion of Inches to Millimeters A2-1
Table A2-2 Conversion of Feet to Meters A2-1
Table A2-3 Conversion of Miles to Kilometers A2-1
Table A2-4 Conversion of Miles per Hour to Kilometers/Hour A2-1

LEAVE BLANK PAGE

STATE OF MICHIGAN

December 1, 2011

The Federal Highway Administration has approved and issued the 2009 Edition of the Manual on Uniform Traffic Control Devices as the National Standard for all highways open to public travel in accordance with Title 23 U.S. Code of Federal Regulations (CFR) Sections 109(d), 114(a), 217, 315, and 402(a), and 23 CFR 655, and 49 CFR 1.48(b)(33) and 1.48(c)(2).

Pursuant to the provisions contained in Section 257.608 of the Michigan Vehicle Code (Public Act 300 of 1949), we certify we have examined this Manual on Uniform Traffic Control Devices. We hereby declare the Federal manual is adopted as the official manual for a uniform system of traffic control devices for the State of Michigan subject to such amendments as are set forth in Michigan to address unique State laws and policies. Taken together, the Michigan Amendments and the Federal Manual become the 2011 Michigan Manual on Uniform Traffic Control Devices. We hereby certify the provisions of the 2011 Michigan Manual on Uniform Traffic Control Devices constitute the prescribed standards of design, construction, and application of traffic control devices for use upon roadways and public parking areas within this State and declare these to be the standards for adoption by the State, counties, and municipalities. The provisions contained herein shall supersede the policies and standards established by all official manuals published previously.

Kirk T. Steudle, Director
Michigan Department of Transportation

Colonel Kriste Kibbey Etue, Director
Michigan State Police

MANUAL ON UNIFORM TRAFFIC CONTROL DEVICES
INTRODUCTION TO MICHIGAN EDITION

As noted in the preceding certification, the 2011 edition of the *Michigan Manual on Uniform Traffic Control Devices* (MMUTCD) consists of the 2009 edition of the Federal *Manual on Uniform Traffic Control Devices* (MUTCD), including subsequent official revisions thereto, as amended by this Michigan Edition.

The part, section, and paragraph numbers used in this state specific edition match the like numbers used in the MUTCD. Pages with revisions are identified with a (MI) next to the page number. Where no reference is made to a part, section, or paragraph of the MUTCD, said part, section, or paragraph has not been amended. Unless specifically noted, none of the provisions of the MUTCD are omitted. Where a section number appears in this supplement with the letters MI added before the paragraph number followed by (Michigan), such as 2C.MI67 (Michigan), such paragraph has no direct counterpart in the MUTCD. All modifications in the MMUTCD are identified by a State of Michigan Symbol in the page margin. New language added which differs from the MUTCD is highlighted.

The meanings of the text headings of "Standard," "Guidance," "Option," and "Support" have the same meanings in this state specific edition as they do in the MUTCD. Direct references from Michigan Statute are current at publication date. All references to the Standard Highway Signs book will pertain to the Michigan version.

From time to time, there will be revisions to the Federal MUTCD and the MMUTCD. These revisions will be incorporated in the manual upon review and approval of both the Michigan Department of Transportation and the Michigan State Police. The MUTCD makes reference to the Uniform Vehicle Code (UVC). However, the Michigan Vehicle Code (Public Act 300 of 1949) (MVC) shall govern over the UVC. Section 257.608 of the MVC contains the authority for the MMUTCD. Sections 257.609 and 257.610 establish the responsibility for the erection and maintenance of traffic control devices on state highways and on county and local roads. Various other sections of the MVC, particularly in Chapter 257, deal with specific traffic regulations and control devices. All references from Michigan Statute, as shown in the manual, may not be current; therefore, Michigan Statute takes precedence.

MANUAL ON UNIFORM TRAFFIC CONTROL DEVICES
INTRODUCTION

Standard:

01 **Traffic control devices shall be defined as all signs, signals, markings, and devices placed or erected by authority of a public body or official having jurisdiction, for the purpose of regulating, warning or guiding traffic as per Section 257.70 of the "Michigan Vehicle Code".**

01A **A peace officer may enter upon a private road that is open to the general public to enforce provisions of this act if signs meeting the requirements of the manual are posted on the private road per Section 257.601a(2) of the "Michigan Vehicle Code".**

01B **A sign or other traffic control device required in a parking area shall conform to the requirements of the manual per Michigan State Statue 257.942b.**

02 **The Manual on Uniform Traffic Control Devices (MUTCD) is incorporated by reference in 23 Code of Federal Regulations (CFR), Part 655, Subpart F and shall be recognized as the national standard for all traffic control devices installed on any street, highway, bikeway, or private road open to public travel (see definition in Section 1A.13) in accordance with 23 U.S.C. 109(d) and 402(a). The policies and procedures of the Federal Highway Administration (FHWA) to obtain basic uniformity of traffic control devices shall be as described in 23 CFR 655, Subpart F.**

03 **In accordance with 23 CFR 655.603(a), and Michigan State Statue for the purposes of applicability of the MUTCD:**

A. Toll roads under the jurisdiction of public agencies or authorities or public-private partnerships shall be considered to be public highways;

B. Private roads open to public travel shall be as defined in Section 1A.13; and

C. Per Michigan State Statue 257.941, parking area means an area used by the public as a means of access to and egress from, and for the free parking of motor vehicles by patrons of a shopping center, business, factory, hospital, institution, or similar building or location. Shopping center means a minimum area of 3 acres of land on which there is located 1 or more stores or business establishments, and where there is provided a parking area.

04 **Any traffic control device design or application provision contained in this Manual shall be considered to be in the public domain. Traffic control devices contained in this Manual shall not be protected by a patent, trademark, or copyright, except for the Interstate Shield and any items owned by FHWA.**

Support:

05 Pictographs, as defined in Section 1A.13, are embedded in traffic control devices but the pictographs themselves are not considered traffic control devices for the purposes of Paragraph 4.

06 The need for uniform standards was recognized long ago. The American Association of State Highway Officials (AASHO), now known as the American Association of State Highway and Transportation Officials (AASHTO), published a manual for rural highways in 1927, and the National Conference on Street and Highway Safety (NCSHS) published a manual for urban streets in 1930. In the early years, the necessity for unification of the standards applicable to the different classes of road and street systems was obvious. To meet this need, a joint committee of AASHO and NCSHS developed and published the original edition of this Manual on Uniform Traffic Control Devices (MUTCD) in 1935. That committee, now called the National Committee on Uniform Traffic Control Devices (NCUTCD), though changed from time to time in name, organization, and personnel, has been in continuous existence and has contributed to periodic revisions of this Manual. The FHWA has administered the MUTCD since the 1971 edition. The FHWA and its predecessor organizations have participated in the development and publishing of the previous editions. There were nine previous editions of the MUTCD, and several of those editions were revised one or more times. Table I-1 traces the evolution of the MUTCD, including the two manuals developed by AASHO and NCSHS. Table I-1a shows the history of the Michigan Manual.

Standard:

07 **The U.S. Secretary of Transportation, under authority granted by the Highway Safety Act of 1966, decreed that traffic control devices on all streets and highways open to public travel in accordance with 23 U.S.C. 109(d) and 402(a) in each State shall be in substantial conformance with the Standards issued or endorsed by the FHWA.**

Support:

08 The "Uniform Vehicle Code (UVC)" is one of the publications referenced in the MUTCD. The UVC contains a model set of motor vehicle codes and traffic laws for use throughout the United States. **In Michigan, the "Michigan Vehicle Code" (MVC) contains motor vehicle codes and traffic laws for use in Michigan. The MVC takes precedent over the UVC. Where appropriate, sections from Michigan State Statue including the MVC have been added to this manual. All references from the MVC may not be current; therefore, current Michigan Statue takes precedence.**

PART 2
SIGNS

CHAPTER 2A. GENERAL

Section 2A.01 Function and Purpose of Signs

Support:

01 This Manual contains Standards, Guidance, and Options for the signing of all types of highways, and private roads open to public travel. The functions of signs are to provide regulations, warnings, and guidance information for road users. Words, symbols, and arrows are used to convey the messages. Signs are not typically used to confirm rules of the road.

02 Detailed sign requirements are located in the following Chapters of Part 2:

Chapter 2B — Regulatory Signs, Barricades, and Gates
Chapter 2C — Warning Signs and Object Markers
Chapter 2D — Guide Signs for Conventional Roads
Chapter 2E — Guide Signs for Freeways and Expressways
Chapter 2F — Toll Road Signs
Chapter 2G — Preferential and Managed Lane Signs
Chapter 2H — General Information Signs
Chapter 2I — General Service Signs
Chapter 2J — Specific Service (Logo) Signs
Chapter 2K — Tourist-Oriented Directional Signs
Chapter 2L — Changeable Message Signs
Chapter 2M — Recreational and Cultural Interest Area Signs
Chapter 2N — Emergency Management Signs

Standard:

03 **Because the requirements and standards for signs depend on the particular type of highway upon which they are to be used, the definitions for freeway, expressway, conventional road, and special purpose road given in Section 1A.13 shall apply in Part 2.**

Section 2A.02 Definitions

Support:

01 Definitions and acronyms that are applicable to signs are given in Sections 1A.13 and 1A.14.

Section 2A.03 Standardization of Application

Support:

01 It is recognized that urban traffic conditions differ from those in rural environments, and in many instances signs are applied and located differently. Where pertinent and practical, this Manual sets forth separate recommendations for urban and rural conditions.

Guidance:

02 *Signs should be used only where justified by engineering judgment or studies, as provided in Section 1A.09.*

03 *Results from traffic engineering studies of physical and traffic factors should indicate the locations where signs are deemed necessary or desirable.*

04 *Roadway geometric design and sign application should be coordinated so that signing can be effectively placed to give the road user any necessary regulatory, warning, guidance, and other information.*

Standard:

05 **Each standard sign shall be displayed only for the specific purpose as prescribed in this Manual. Determination of the particular signs to be applied to a specific condition shall be made in accordance with the provisions set forth in Part 2. Before any new highway, private road open to public travel (see definition in Section 1A.13), detour, or temporary route is opened to public travel, all necessary signs shall be in place. Signs required by road conditions or restrictions shall be removed when those conditions cease to exist or the restrictions are withdrawn.**

Section 2A.04 Excessive Use of Signs

Guidance:

01 *Regulatory and warning signs should be used conservatively because these signs, if used to excess, tend to lose their effectiveness. If used, route signs and directional guide signs should be used frequently because their use promotes efficient operations by keeping road users informed of their location.*

Section 2D.11 Design of Route Signs

Standard:

01 **The "Standard Highway Signs and Markings" book (see Section 1A.11) shall be used for designing route signs. Other route sign designs shall be established by the authority having jurisdiction.**

02 **Interstate Route signs (see Figure 2D-3) shall consist of a cutout shield, with the route number in white letters on a blue background, the word INTERSTATE in white upper-case letters on a red background, and a white border. This sign shall be used on all Interstate routes and in connection with route sign assemblies on intersecting highways.**

03 **A 24 x 24-inch minimum sign size shall be used for Interstate route numbers with one or two digits, and a 30 x 24-inch minimum sign size shall be used for Interstate route numbers having three digits.**

Option:

04 Interstate Route signs may contain the State name in white upper-case letters on a blue background.

Standard:

05 **Off-Interstate Business Route signs (see Figure 2D-3) shall consist of a cutout shield carrying the number of the connecting Interstate route and the words BUSINESS and either LOOP or SPUR in upper-case letters. The legend and border shall be white on a green background, and the shield shall be the same shape and dimensions as the Interstate Route sign. In no instance shall the word INTERSTATE appear on the Off-Interstate Business Route sign.**

Figure 2D-3. Route Signs

Option:

06 The Off-Interstate Business Route sign may be used on a major highway that is not a part of the Interstate system, but one that serves the business area of a city from an interchange on the system.

07 When used on a green guide sign, a white square or rectangle may be placed behind the shield to improve contrast.

Standard:

08 **U.S. Route signs (see Figure 2D-3) shall consist of black numerals on a white shield surrounded by a rectangular black background without a border. This sign shall be used on all U.S. routes and in connection with route sign assemblies on intersecting highways.**

09 **A 24 x 24-inch minimum sign size shall be used for U.S. route numbers with one or two digits, and a 30 x 24-inch minimum sign size shall be used for U.S. route numbers having three digits.**

10 **The Michigan State Route signs shall be the M1-6 (see Figure 2D-3).**

Guidance:

11 *State Route signs (see Figure 2D-3) should be rectangular and should be approximately the same size as the U.S. Route sign. State Route signs should also be similar to the U.S. Route sign by containing approximately the same size black numerals on a white area surrounded by a rectangular black background without a border. The shape of the white area should be circular in the absence of any determination to the contrary by the individual State concerned.*

12 *Where U.S. or State Route signs are used as components of guide signs, only the distinctive shape of the shield itself and the route numerals within should be used. The rectangular background upon which the distinctive shape of the shield is mounted, such as the black area around the outside of the shields on the M1-4 and standard M1-6 signs, should not be included on the guide sign. Where U.S. or State Route signs are used as components of other signs of non-contrasting background colors, the rectangular background should be used to so that recognition of the distinctive shape of the shield can be maintained.*

Exhibit 14 to MDOT's MSJ

U.S. Department of Transportation
Federal Highway Administration

Michigan Division

315 W. Allegan Street, Room 201
Lansing, MI 48933
517-377-1844 (office)
517-377-1804 (fax)
Michigan.FHWA@dot.gov

October 19, 2011

In Reply Refer To:
HDA-MI

Mr. Mark A. Van Port Fleet, P.E.
Director, Bureau of Highway Development
Michigan Department of Transportation
Lansing, MI

Dear Mr. Van Port Fleet:

Thank you for your September 28, 2011 submittal of the draft version of the proposed 2011 Michigan Manual on Uniform Traffic Control Devices (MUTCD). Thank you also for including our personnel in the committee deliberations that led to the development of the proposed manual.

We approve this manual for use in Michigan. The modifications contained in this draft fall within the range of individual State authority and maintain substantial compliance with the most current (2009) national MUTCD. Please proceed to publish and distribute the 2011 Michigan MUTCD.

Sincerely,

David Morena

David A. Morena
Safety & Traffic Operations Engineer

For: Russell L. Jorgenson
Division Administrator

lmk
By e-mail
cc: Mark Bott, BottM@michigan.gov, MDOT, T&S Division
DMS: FHWA Approval- 2011 Mich MUTCD
File Directory: J:\GroupWiseFiles
File Name: DAM_FHWA Approval- 2011 Mich MUTCD_OCT192011.docx

RICK SNYDER
GOVERNOR

STATE OF MICHIGAN
DEPARTMENT OF TRANSPORTATION
LANSING

KIRK T. STEUDLE
DIRECTOR

September 28, 2011

Mr. Russell L. Jorgenson
Michigan Division Administrator
Federal Highway Administration
315 West Allegan Street, Room 211
Lansing, Michigan 48933

Dear Mr. Jorgenson:

Subject: *Michigan Manual on Uniform Traffic Control Devices* (MMUTCD)

Enclosed for your approval is the draft 2011 MMUTCD, along with a list of the proposed changes from the MMUTCD State Advisory Committee (SAC). David Morena, FHWA Traffic and Safety Engineer, is a member of the SAC and advised the committee during the review process.

On December 16, 2009, the Federal Highway Administration (FHWA) released the 2009 Federal *Manual on Uniform Traffic Control Devices* (MUTCD). Federal and state law requires the State of Michigan to be in compliance with the federal version. Federal law provides an adoption period of two years to allow states adequate time to adjust to changes in the manual. Therefore, the State of Michigan must be in compliance by December 16, 2011.

The Michigan Departments of Transportation and State Police will adopt a state manual based on the 2009 federal version. The MMUTCD will address items in the Michigan Vehicle Code that conflict with the federal MUTCD, and special items unique to Michigan. The 2005 MMUTCD remains the official manual for the State of Michigan until the 2011 MMUTCD is published.

If you have any questions, please contact me or Mark W. Bott, Traffic Operations Manager, at 517-335-2625.

Sincerely,

Mark A. Van Port Fleet, Director
Bureau of Highway Development

Enclosures

BOHD:DD:MB:nw

cc:	G. Johnson	B. Wieferich
	T. Frake	P. Corlett
	A. Uzcategui	R. Cadena
	A. Kremer	D. Morena, FHWA
	SAC	TSAD

Exhibit 15 to MDOT's MSJ

MUTCD 2000

Manual on Uniform Traffic Control Devices

millennium edition

December 2000

Incorporating:
Revision No. 1 dated December 28, 2001
Errata No. 1 dated June 14, 2001

U.S. Department of Transportation

Federal Highway Administration

MUTCD 2000

Manual on Uniform Traffic Control Devices

millennium edition

December 2000

U.S. Department of Transportation

Federal Highway Administration

MUTCD 2000

Manual on Uniform Traffic Control Devices

millennium edition

December 2000

Incorporating:
Revision No. 1 dated December 28, 2001
Errata No. 1 dated June 14, 2001

U.S. Department of Transportation

Federal Highway Administration

The Manual on Uniform Traffic Control Devices (MUTCD) is approved by the Federal Highway Administrator as the National Standard in accordance with Title 23 U.S. Code, Sections 109(d), 114(a), 217, 315, and 402(a), 23 CFR 655, and 49 CFR 1.48(b)(8), 1.48(b)(33), and 1.48(c)(2).

Addresses for Publications Referenced in the MUTCD

American Association of State Highway and Transportation Officials
444 North Capitol Street, NW, Suite 225
Washington, DC 20001

American Railway Engineering and Maintenance-of-Way Association
8201 Corporate Dr., Suite 1125
Landover, MD 20785-2230

Illuminating Engineering Society
120 Wall Street, Floor 17
New York, NY 10005

Institute of Makers of Explosives
1120 19th St., NW, Suite 310
Washington, DC 20036-3605

Institute of Transportation Engineers
1099 14th St., NW, Suite 300 West
Washington, DC 20005

National Committee on Uniform Traffic Laws and Ordinances
107 S. West St., #110
Alexandria, VA 22314

Transportation Research Board
The National Academies
2101 Constitution Avenue, NW
Washington, DC 20418

U.S. Architectural and Transportation Barriers Compliance Board (The U. S. Access Board)
1331 F Street, NW, Suite 1000
Washington, DC 20004-1111

Acknowledgments

The Federal Highway Administration gratefully acknowledges that valuable assistance that it received from the National Committee on Uniform Traffic Control Devices and its over 200 voluntary members in the development of this Manual.

MANUAL ON UNIFORM TRAFFIC CONTROL DEVICES

INTRODUCTION

Standard:

Traffic control devices shall be defined as all signs, signals, markings, and other devices used to regulate, warn, or guide traffic, placed on, over, or adjacent to a street, highway, pedestrian facility, or bikeway by authority of a public agency having jurisdiction.

The Manual on Uniform Traffic Control Devices (MUTCD) is incorporated by reference in 23 Code of Federal Regulations (CFR), Part 655, Subpart F and shall be recognized as the national standard for traffic control devices on all public roads open to public travel in accordance with 23 U.S.C. 109(d) and 402(a). The policies and procedures of the Federal Highway Administration (FHWA) to obtain basic uniformity of traffic control devices shall be as described in 23 CFR 655, Subpart F.

Any traffic control device design or application provision contained in this Manual shall be considered to be in the public domain. Traffic control devices contained in this Manual shall not be protected by a patent or copyright, except for the Interstate Shield.

Support:

The need for uniform standards was recognized long ago. The American Association of State and Highway Officials (AASHO), now known as the American Association of State Highway and Transportation Officials (AASHTO), published a manual for rural highways in 1927, and the National Conference on Street and Highway Safety (NCSHS) published a manual for urban streets in 1930. In the early years, the necessity for unification of the standards applicable to the different classes of road and street systems was obvious. To meet this need, a joint committee of AASHO and NCSHS developed and published the original edition of this Manual of Uniform Traffic Control Devices (MUTCD) in 1935. That committee, now called the National Committee on Uniform Traffic Control Devices (NCUTCD), though changed from time to time in name, organization, and personnel, has been in continuous existence and has contributed to periodic revisions of this Manual. The FHWA has administered the MUTCD since the 1971 edition. The FHWA and its predecessor organizations have participated in the development and publishing of the previous editions. There were seven previous editions of the MUTCD, and several of those editions were revised one or more times. Table I-1 traces the evolution of the MUTCD, including the two manuals developed by AASHO and NCSHS.

Standard:

The U.S. Secretary of Transportation, under authority granted by the Highway Safety Act of 1966, decreed that traffic control devices on all streets and highways open to public travel in accordance with 23 U.S.C. 109(d) and 402(a) in each State shall be in substantial conformance with the Standards issued or endorsed by the FHWA.

Table I-1. Evolution of the MUTCD

Year	Name	Month / Year Revised
1927	Manual and Specifications for the Manufacture, Display, and Erection of U.S. Standard Road Markers and Signs (for rural roads)	4/29, 12/31
1930	Manual on Street Traffic Signs, Signals, and Markings (for urban streets)	No revisions
1935	Manual on Uniform Traffic Control Devices for Streets and Highways (MUTCD)	2/39
1942	Manual on Uniform Traffic Control Devices for Streets and Highways — War Emergency Edition	No revisions
1948	Manual on Uniform Traffic Control Devices for Streets and Highways	9/54
1961	Manual on Uniform Traffic Control Devices for Streets and Highways	No revisions
1971	Manual on Uniform Traffic Control Devices for Streets and Highways	11/71, 4/72, 3/73, 10/73, 6/74, 6/75, 9/76, 12/77
1978	Manual on Uniform Traffic Control Devices for Streets and Highways	12/79, 12/83, 9/84, 3/86
1988	Manual on Uniform Traffic Control Devices for Streets and Highways	1/90, 3/92, 9/93, 11/94, 12/96, 6/98, 1/00
2000	Manual on Uniform Traffic Control Devices for Streets and Highways — Millennium Edition	6/01

Support:

23 CFR, Part 655.603 adopts the MUTCD as the national standard for any street, highway, or bicycle trail open to public travel in accordance with 23 U.S.C. 109(d) and 402(a). The "Uniform Vehicle Code (UVC)" is one of the documents referenced in the MUTCD. The UVC contains a model set of motor vehicle codes and traffic laws for use throughout the United States. The States are encouraged to adopt Section 15-117 of the UVC, which states that, "No person shall install or maintain in any area of private property used by the public any sign, signal, marking, or other device intended to regulate, warn, or guide traffic unless it conforms with the State manual and specifications adopted under Section 15-104." Section 15-104 of the UVC adopts the MUTCD as the standard for conformance.

The Standard, Guidance, Option, and Support material described in this edition of the MUTCD provide the transportation professional with the information needed to make appropriate decisions regarding the use of traffic control devices on streets and highways. The material in this edition is organized to better differentiate between Standards that must be satisfied for the particular circumstances of a situation, Guidances that should be followed for the particular circumstances of a situation, and Options that may be applicable for the particular circumstances of a situation.

Throughout this Manual the headings Standard, Guidance, Option, and Support are used to classify the nature of the text that follows. Figures, tables, and illustrations supplement the text and might constitute a Standard, Guidance, Option, or Support. The user needs to refer to the appropriate text to classify the nature of the figure, table, or illustration.

Standard:

When used in this Manual, the text headings shall be defined as follows:

1. **Standard—a statement of required, mandatory, or specifically prohibitive practice regarding a traffic control device. All standards are labeled, and the text appears in bold large type. The verb shall is typically used. Standards are sometimes modified by Options.**

2. **Guidance—a statement of recommended, but not mandatory, practice in typical situations, with deviations allowed if engineering judgment or engineering study indicates the deviation to be appropriate. All Guidance statements are labeled and the text appears in large type. Guidance text is the same size as Standard text, but it is not bold. The verb should is typically used. Guidance statements are sometimes modified by Options.**

3. **Option—a statement of practice that is a permissive condition and carries no requirement or recommendation. Options may contain allowable modifications to a Standard or Guidance. All Option statements are labeled, and the text appears in small type. The verb may is typically used.**

4. **Support—an informational statement that does not convey any degree of mandate, recommendation, authorization, prohibition, or enforceable condition. Support statements are labeled, and the text appears in small type. The verbs shall, should, and may are not used in Support statements.**

Support:

Throughout this Manual all dimensions and distances are provided in the International System of Units, a modernized version of the Metric system, and their English equivalent units are shown in parentheses.

Guidance:

Before laying out distances or determining sign sizes, the public agency should decide whether to use the International System of Units (Metric) or the English equivalent units. The chosen units should be specified on plan drawings. Care should be given to ensure that the chosen unit of measurement is known to those responsible for designing, installing, or maintaining traffic control devices.

EXHIBIT 16 TO MDOT's MSJ

(A) None of the three items listed in paragraph (f)(3)(ii)(A) of this section exceeds $30 million (positive or negative).

(B) For fiscal year 2002 only, it is less than 20 percent owned, directly or indirectly, by all U.S. Reporters of the affiliate combined and none of the three items listed in paragraph (f)(3)(ii)(A) of this section exceeds $100 million (positive or negative).

(C) For fiscal years other than 2002, it is less than 20 percent owned, directly or indirectly by all U.S. Reporters of the affiliate combined.

* * * * *

[FR Doc. 00–32089 Filed 12–15–00; 8:45 am]

BILLING CODE 3510–06–M

DEPARTMENT OF TRANSPORTATION

Federal Highway Administration

23 CFR Part 655

[FHWA Docket Nos. 97–2295 (Formerly 96–47), 97–3032, 98–3644, 98–4720, 99–5704, 99–6298, 99–6575, and 99–6576]

RIN 2125–AE11, AE25, AE38, AE50, AE58, AE66, AE71, and AE72

National Standards for Traffic Control Devices; Manual on Uniform Traffic Control Devices for Streets and Highways

AGENCY: Federal Highway Administration (FHWA), DOT.

ACTION: Final amendments to the Manual on Uniform Traffic Control Devices for Streets and Highways (MUTCD).

SUMMARY: This document contains the complete revision to the MUTCD as adopted by the FHWA. The MUTCD is incorporated by reference in 23 CFR part 655, subpart F and recognized as the national standard for traffic control devices on all public roads. The new MUTCD has incorporated technological advances and application change, as well as improved the overall organization to clarify the discussion of the content.

DATES: The final rule is effective January 17, 2001. However, the FHWA is setting later compliance dates for some portions of the MUTCD; see the **SUPPLEMENTARY INFORMATION** section for further details. Incorporation by reference of the publication listed in the regulations is approved by the Director of the **Federal Register** as of January 17, 2001.

FOR FURTHER INFORMATION CONTACT: Mr. Ernest D. L. Huckaby, Office of Transportation Operations (HOTO–1), (202) 366–9064, Department of Transportation, Federal Highway Administration, 400 Seventh Street, SW., Room 3412, Washington, DC 20590. Office hours are from 7:45 a.m. to 4:15 p.m. E.T., Monday through Friday, except Federal holidays.

SUPPLEMENTARY INFORMATION:

Electronic Access

Internet users may access all comments received by the U.S. DOT Dockets, Room PL–401, by using the universal resource locator (URL) *http://dms.dot.gov.* It is available 24 hours each day, 365 days each year. Please follow the instructions online for more information and help.

An electronic copy of this document may be downloaded using a modem and suitable communications software from the Government Printing Office's Electronic Bulletin Board Service at (202) 512–1661. Internet users may reach the Office of the Federal Register's home page at *http://www.nara.gov/fedreg* and the Government Printing Office's web site at *http://www.access.gpo.gov/nara.*

The text for the millennium edition of the MUTCD is available from the FHWA Office of Transportation Operations' web site at: *http://mutcd.fhwa.dot.gov*

Background

The FHWA announced its intent to rewrite and reformat the MUTCD on January 10, 1992, at 57 FR 1134. The purpose of this rewrite effort is to reformat the text for clarity of intended meanings, to include metric dimensions (*i.e.,* both English and metric dimensions will be included in the text) and values for the design and installation of traffic control devices, and to improve the overall organization and discussion of the contents in the MUTCD.

Although the Federal Highway Administrator is responsible for adopting the changes contained in this new millennium edition, the National Committee on Uniform Traffic Control Devices (NCUTCD) took the lead in this effort to rewrite and reformat the MUTCD. The NCUTCD is a national organization of individuals from the American Association of State Highway and Transportation Officials (AASHTO), the National Association of County Engineers (NACE), the American Public Works Association (APWA), the Institute of Transportation Engineers (ITE), and other organizations that have extensive experience in the installation and maintenance of traffic control devices. The NCUTCD voluntarily assumed the arduous task of rewriting, reformatting and editing the entire 1988 MUTCD into an updated and more user friendly document.

The FHWA reviewed and incorporated most of the NCUTCD's proposals for revising the MUTCD in several **Federal Register** notices of proposed amendments. This document contains the disposition of the comments to the dockets of the notices of proposed amendments which were published in the **Federal Register** shown in the table below. The table also shows the number of letters submitted to each docket and the number of separate comments addressed as part of the FHWA review and deliberation.

Adopted changes to the MUTCD text, as discussed herein, are available on the MUTCD Internet site *(http://mutcd.fhwa.dot.gov).* The final rule text will be available on the MUTCD Internet site in December 2000. Anyone unable to download the text should write to the Federal Highway Administration, Office of Transportation Operations, HOTO–1, 400 Seventh Street, SW., Washington, DC 20590.

TABLE OF NOTICES OF PROPOSED AMENDMENTS PUBLISHED BY FHWA

MUTCD part	Title	Docket number and date	Number of letters received	Separate comment entries
Part 1	General provisions/Definitions	97–3032 12/05/97	24	86
Part 1 (update)	General provisions/Definitions	99–6575 12/30/99	14	60
Chapters 2A,D,E,F,I	Signs	98–3644 06/11/98	47	800
Chapters 2G, 2H	Tourist oriented directional signs, & recreation & cultural interest signs.	98–4720 06/24/99	80	95

TABLE OF NOTICES OF PROPOSED AMENDMENTS PUBLISHED BY FHWA—Continued

MUTCD part	Title	Docket number and date	Number of letters received	Separate comment entries
Chapter 2C	Warning signs	99–5704 06/24/99	42	329
Chapter 2B	Regulatory signs	99–6298 12/21/99	86	304
Part 3	Markings	97–2295 01/06/97	40	247
Part 3 (update)	Markings	99–6575 12/30/99	27	181
Part 4	Signals	97–2295 01/06/97	24	264
Part 4 (update)	Signals	99–6575 12/30/99	111	578
Part 5	Low volume roads	99–6298 12/21/99	23	231
Part 6	Temporary traffic control	99–6576 12/30/99	56	2652
Part 7	Traffic controls for school areas	97–3032 12/05/97	20	156
Part 8	Traffic control systems for railroad-highway grade crossings.	97–2295 01/06/97	29	210
Part 8 (update)	Highway-rail grade crossings	99–6298 12/21/99	23	210
Part 9	Traffic controls for bicycles	98–4720 06/24/99	79	357
Part 10	Traffic controls for highway-light rail grade crossings	99–5704 06/24/99	46	381

Summary of Comments

The FHWA has reviewed the comments received in response to the dockets listed above and other information related to the MUTCD and these proposals. The FHWA is acting on the following items published in the notice of proposed amendments. Each action and its basis is summarized below:

Discussion of Adopted Amendments to Part 1—General Provisions

The FHWA received 146 comments from 38 commenters concerning Part 1. Only the technical (not editorial) comments are addressed in this discussion. Two notices of proposed amendments (NPA) were published at 62 FR 64324 on December 5, 1997, and at 64 FR 73612 on December 30, 1999.

1. In Part 1 Introduction, the FHWA is incorporating a discussion on defining the following condition headings: STANDARD, OPTION, GUIDANCE, and SUPPORT. This change addresses many comments received regarding the difficulty in distinguishing between distinct sections in previous editions of the MUTCD. In the NPA for Part 1, this discussion was covered in Section 1A.10 MUTCD Changes, Interpretations, and Experimentations. Based on docket comments, the FHWA believes it is important for the reader to see this discussion before proceeding to the other sections of the manual. Therefore, the FHWA is moving this discussion to the Introduction.

The FHWA is also changing the way that these condition headings appear throughout the text. The FHWA received many comments expressing a need for improvement in the blocked headings found in the notice of proposed amendments. An explanation of both the terms and new heading style is included in the Introduction.

Also being added is a new STANDARD statement indicating that any traffic control device design or application provision contained in the MUTCD shall be considered in the public domain. The FHWA will not include any copyrighted or patented devices in the MUTCD with the exception of the Interstate Shield, a copyrighted device developed by the American Association of State Highway and Transportation Officials (AASHTO). Since this is a frequently asked question, the FHWA has decided to include language in the MUTCD to address this policy.

A new GUIDANCE paragraph is added to Part 1 Introduction to discuss the use of the International System of Units, a modernized version of the Metric system, and English units used throughout the MUTCD. The FHWA recommends that a decision be made to consistently use either the International System of Units (Metric) or English units in the design and installation of traffic control devices.

2. In Table I.1, Evolution of the MUTCD, two other revisions to the 1988 MUTCD are added for a total of seven revisions to the 1988 MUTCD, instead of the five revisions previously shown in the table. The FHWA has also added the new millennium edition to this table.

3. In Section 1A.01 Purpose of Traffic Control Devices, paragraph 1, the term ''road users'' is referenced. Road user is the preferred term because it encompasses both motorized and non-motorized traffic. The term ''road user'' is defined in Section 1A.13. The FHWA did not receive any docket comments on this change.

4. In Section 1A.02 Principles of Traffic Control Devices, under the SUPPORT statement, the term ''speed'' is added as a variable that governs the design, operation, placement, and location of various traffic control devices. The traveling speed of road users can affect their ability to appropriately respond to the driving task. The FHWA did not receive any docket comments on this change.

5. In Section 1A.03 Design of Traffic Control Devices, under the STANDARD statement, the term ''colors'' is added to the statement that all symbols not shown in the ''Standard Highway Signs'' [1] book shall be adopted using the

[1] ''Standard Highway Signs,'' FHWA, 1979 Edition is included by reference in the 1988

EXHIBIT 17 TO MDOT's MSJ

750 Administrative practice and procedure, Exports, Reporting and recordkeeping requirements.

Eileen Albanese,

Director, Office of Exporter Services.

[FR Doc. 04–26518 Filed 11–30–04; 8:45 am]

BILLING CODE 3510–33–P

DEPARTMENT OF TRANSPORTATION

Federal Highway Administration

23 CFR Part 655

[FHWA Docket No. FHWA–2004–17321]

RIN 2125–AF02

National Standards for Traffic Control Devices; the Manual on Uniform Traffic Control Devices for Streets and Highways; Specific Service and General Service Signing for 24-Hour Pharmacies

AGENCY: Federal Highway Administration (FHWA), DOT.

ACTION: Final rule.

SUMMARY: The FHWA published an interim final rule on May 10, 2004, that amended the 2003 Edition of the Manual on Uniform Traffic Control Devices (MUTCD) to permit the use of Specific Service and General Service signing to assist motorists in locating licensed 24-hour pharmacy services open to the public. Those changes were designated as Revision No. 1 to the 2003 Edition of the MUTCD, and they became effective on July 21, 2004. In the interim final rule, the FHWA provided a 50-day comment period for the public to review and make comment on the technical details. The FHWA adopts as final the interim rule for Revision No. 1, with certain changes to the technical details to address pertinent comments to the docket. The MUTCD is incorporated by reference in 23 CFR part 655, subpart F, and recognized as the national standard for traffic control devices used on all public roads.

DATES: This regulation is effective January 3, 2005. The incorporation by reference of the publication listed in this rule is approved by the Director of the Federal Register as of January 3, 2005.

FOR FURTHER INFORMATION CONTACT: Mr. Ernest Huckaby, Office of Transportation Operations (HOTO–1), (202) 366–9064, or Mr. Raymond Cuprill, Office of the Chief Counsel, (202) 366–0791, Federal Highway Administration, 400 Seventh Street, SW., Washington, DC 20590–0001. Office hours are from 7:45 a.m. to 4:15 p.m., *e.t.*, Monday through Friday, except Federal holidays.

SUPPLEMENTARY INFORMATION:

Electronic Access

This document and all comments received by the U.S. DOT Docket Facility, Room PL–401, may be viewed through the Docket Management System (DMS) at *http://dms.dot.gov*. The DMS is available 24 hours each day, 365 days each year. Electronic retrieval help and guidelines are available under the help section of this Web site.

An electronic copy of this document may be downloaded by using a computer, modem and suitable communications software from the Government Printing Office's Electronic Bulletin Board Service at (202) 512–1661. Internet users may reach the Office of the Federal Register's home page at *http://www.archives.gov* and the Government Printing Office's Web page at *http://www.gpoaccess.gov/nara*.

Background

On January 23, 2004, the President signed, thereby enacting into law, the Consolidated Appropriations Act, Fiscal Year 2004 (the Act), Public Law 108–199, 118 Stat. 3. Division F of the Act (the Transportation, Treasury, and Independent Agencies Appropriations Act, 2004, at 118 Stat. 279), Title I, section 124, directs the Secretary of Transportation to amend the MUTCD to include a provision permitting information to be provided to motorists to assist motorists in locating licensed 24-hour pharmacy services open to the public. The Act also allows placement of logo panels that display information disclosing the names or logos of pharmacies that are located within three miles of an interchange on the Federal-aid system.[1]

The FHWA published an interim final rule on May 10, 2004, at 69 FR 25828, that amended the 2003 Edition of the Manual on Uniform Traffic Control Devices (MUTCD) to implement the requirements of the Act and provide for the uniformity of signing for pharmacy services when jurisdictions choose to install such signs. Those changes were designated as Revision No. 1 to the 2003 Edition of the MUTCD, and they became effective on July 21, 2004. In the interim final rule, the FHWA provided a 50-day comment period for the public to review and make comment on the technical details. Based on the comments received and its own experience, the FHWA is adopting as final the interim rule for Revision No. 1, with certain changes to the technical details to address pertinent comments to the docket.

The text of this Revision No. 1 and the text of the 2003 Edition of the MUTCD with Revision No. 1 final text incorporated are available for inspection and copying as prescribed in 49 CFR part 7 at the FHWA Office of Transportation Operations. Furthermore, final Revision No. 1 changes are available on the MUTCD Internet site (*http://mutcd.fhwa.dot.gov*). The entire MUTCD text with final Revision No. 1 text incorporated is also available on this Internet site.

Summary of Comments

The FHWA received 36 letters submitted to the docket, of which four were duplicates of letters previously submitted to the docket. Comments were received from the National Committee on Uniform Traffic Control Devices (NCUTCD), four State Departments of Transportation, four members of Congress and a Senator all representing the State of Illinois, two national organizations representing pharmacy businesses, six other national organizations representing a variety of interests, nine organizations representing retail merchants or drug stores in individual States, one major national chain drug store company, and four individual private citizens. The FHWA has reviewed and analyzed all the comments received. General comments are discussed first, followed by discussion of significant comments and adopted changes in each of the individual sections of the MUTCD affected by this final rule.

Discussion of General Comments—Part 2 Signs

Nearly all the letters to the docket expressed either support for or opposition to the general concept of adding signing for 24-hour pharmacies to the MUTCD. The comments from the four members of Congress and the Senator representing the State of Illinois were in support of the changes. The FHWA was required by the law described above to add pharmacy signing to the MUTCD and, as a result, the interim final rule solicited comments only on the technical details of the signing and not the general concept. The comments we received in opposition to the general concept provided insufficient information to suggest that the FHWA should seek legislative relief at this time.

[1] Federal-aid systems are defined in 23 U.S.C. 101 and 103.

Discussion of Section 2D.45 General Service Signs (D9 Series)

A private citizen commented that the MUTCD changes included in the interim final rule went beyond the legislative mandate by including General Service signs as well as Specific Service (logo) signs, and that this was inappropriate. Although General Service signs for 24-hour pharmacies were not specifically mentioned in the law, these were addressed in the interim final rule because some States have no program for Specific Service signs and only use General Service signs. Also, in urban areas it is often impractical to provide Specific Service signing due to close spacing of interchanges and, in these conditions, many States use General Service signs instead as a stand-alone supplemental sign (such as the D9–18 or D9–18a) or as sets of individual D9 series signs attached to (supplementing) interchange guide signs. Therefore, the FHWA retains the General Service signs for 24-hour pharmacies in this final rule.

A national association representing pharmacists commented that eligibility for signing should be extended to pharmacies that are open less than 24 hours per day. Many other commenters, however, supported limiting the signing eligibility to 24-hour pharmacies, stating that there is a need for access to pharmacy services 24 hours a day and that signing leading travelers to a closed pharmacy would not be in the public interest. Because of these reasons and the fact that the legislation was specific in directing that eligibility be limited to 24-hour pharmacies, the FHWA declines to make any change to the 24 hours per day criterion for eligibility for General Service signing as contained in the interim final rule. This discussion and decision also apply to the similar criterion for pharmacy signing eligibility as stated in other applicable sections of Part 2 of the MUTCD, and the FHWA makes minor editorial changes to the text of various sections in Part 2 to add the words ''24-hour'' preceding ''pharmacy'' where needed for clarity.

A national association representing chain drug stores commented that the signing eligibility requirement for a licensed pharmacist to be on duty ''at all times'' and ''7 days per week'' are too inflexible, since pharmacists could be ''on a break'' and since some 24-hour pharmacies are closed on some holidays. The FHWA declines to make a change in these requirements as stated in the interim final rule. The FHWA believes that the intent of the legislation is to assure that road users can locate pharmacy services that are available at all times. A pharmacist can be on a ''break'' and still be on duty in the pharmacy, and in all probability will also be present on the pharmacy premises during the break. The service availability criterion for other 24 hours per day services, such as hospitals, emergency services, etc., is stated as ''24 hour service, 7 days per week'' in Section 2D.45 and these facilities are in fact open for service on holidays. States could make provisions in their service signing eligibility policies to account for pharmacist breaks and holidays, particularly if their individual State laws make reference to these situations and how they are to be handled.

The NCUTCD and a private citizen commented that the eligibility criteria for pharmacy signing should be modified to add that a State-licensed pharmacist must be ''present'' as well as ''on duty'' 24 hours per day, 7 days per week. The FHWA agrees with this comment and changes the text of Sections 2D.45, 2E.51, and 2F.01 accordingly. For a pharmacy to truly offer its prescription-dispensing services on a 24 hours per day basis, it is necessary that a licensed pharmacist be physically present at all times. It is possible for a pharmacist to be ''on duty'' in the employ of the individual pharmacy or of the pharmacy chain company that owns or operates the pharmacy, but not physically present (such as one ''late night'' pharmacist ''shared'' between two or more stores in a given city or region). If a pharmacist must travel to the pharmacy from some other location during late night hours if a road user needs his or her services, delays would result in filling the needed prescription. This would be inconsistent with the intent of the legislation. Adding the requirement for a licensed pharmacist to be ''present'' as well as on duty clarifies the intent.

The American Pharmacists Association (APhA), a national organization representing pharmacists, suggested that the D9–20 pharmacy symbol sign shown in Figure 2D–11 General Service Signs in the interim final rule should use a different design. Specifically, the APhA suggested that the ''One Symbol for Pharmacy'' design be used instead of the bold ''Rx'' symbol. The design of that symbol (hereafter referred to as ''the APhA symbol''), features an ''Rx'' with the ''x'' visually less distinct from the ''R'' than in the symbol used by the FHWA in the interim final rule (hereafter referred to as ''the FHWA symbol''). Also, inside the loop of the ''R'' of the APhA symbol are graphical stylized representations of three human figures (a man, a woman, and a child.) The APhA symbol is more visually cluttered than the FHWA symbol and would therefore provide a legibility distance considerably less than that of the FHWA symbol. There is no research indicating that the APhA symbol is more recognizable by the traveling public than the FHWA symbol. The FHWA believes that the simplicity and boldness of the FHWA symbol will aid in recognition, conspicuity, and legibility for road users, as compared to the APhA symbol. Also, the APhA comments state that that organization trademarked the APhA symbol in 1993. Because patented or trademarked symbols cannot be included in the MUTCD, the FHWA would require that the symbol be released to the public domain. Although the comments indicate that APhA would be willing to allow the FHWA to use the symbol, that is different from placing it into the public domain. It is likely that the APhA would want to retain its trademark so that the symbol could be used for other purposes regarding pharmacies and pharmacists, such as letterhead, business signs, etc. For these reasons, the FHWA believes that the pharmacy symbol shown for the D9–20 sign in the interim final rule is a better alternative to the APhA symbol and therefore makes no change in the symbol design.

The NCUTCD, 3 State highway authorities, and one private citizen suggested that the D9–20a ''24 HR'' plaque shown with the D9–20 pharmacy symbol in Figure 2D–11 in the interim final rule should be eliminated. These commenters stated that ''24 HR'' plaques are not required in the MUTCD for other services that must be available 24 hours per day in order to be eligible for signing (such as hospitals and emergency services).

A comment from a national chain drug store company supported the ''24 HR'' plaque because of the information and benefit it provides to travelers.

The FHWA believes that, although other services that must operate 24 hours per day to be eligible for signing do not require the use of a ''24 HR'' plaque, there is good reason to require the D9–20a ''24 HR'' plaque with the D9–20 Pharmacy symbol. Most road users expect and understand that a hospital must be open 24 hours per day; however, this is not the case with pharmacies. Most pharmacies are not open 24 hours per day, but the legislation specifically limits eligibility to 24-hour pharmacies. Therefore, it is necessary that road users being guided to a 24-hour pharmacy by these signs be advised that it is in fact a 24-hour pharmacy that can be accessed via the signed exit. Otherwise, there would be

doubt in the road user's mind as to whether or not to exit if he or she were seeking the pharmacy services during the middle of the night. Also, if the plaque were made an option rather than a requirement, then some States might use it and others would not, and this lack of uniform application would lead to road user confusion. The FHWA retains the required use of the D9–20a plaque with the D9–20 pharmacy symbol sign as stated in the interim final rule.

Discussion of Section 2E.51 General Services Signs

As stated earlier in the discussion of comments on Section 2D.45 General Service Signs, the FHWA retains the required use of the D9–20a "24 HR" plaque with the D9–20 pharmacy symbol General Service sign. For consistency with the principles stated in that discussion, the FHWA modifies Figure 2E–42 Examples of General Service Signs (with Exit Numbering) accordingly. In the D9–18 sign (with six service symbols) shown as the lower right sign of the 4 signs shown in the figure, the "Rx" symbol is shifted slightly upward on the sign so that it is closer to the lodging symbol above it, and the legend "24 HR" is added underneath the "Rx" symbol. Also, in the D9–18a sign shown as the lower left sign of the 4 signs shown in the figure, the legend "24 HR" is added to precede the word "PHARMACY".

The NCUTCD commented that the order of the services shown on the D9–18a word message sign in the lower left of the figure should be modified so that "24 HR PHARMACY" would be above "HOSPITAL." The NCUTCD stated that this would avoid potential confusion with a hospital that has a pharmacy. The FHWA agrees with this comment and makes the change in Figure 2E–42. Some hospitals have pharmacies that serve hospital inpatients but not travelers, and a road user could misinterpret the two last lines of the D9–18a word message sign as being a single phrase "hospital pharmacy," rather than two separate services, and infer that the pharmacy services might not be available to the traveler. Changing the order of the services such that hospital is on the bottom line will help prevent such a misinterpretation. For consistency with this change in the figure, the FHWA also modifies the last sentence of the fourth Option statement of Section 2E.51 to delete the phrase "in the last position."

Discussion of Section 2F.01 Eligibility

A few commenters suggested that the maximum distance of 3 miles from an interchange on the Federal-aid highway system to be eligible for pharmacy signing should be extended to up to 15 miles in cases where eligible pharmacies do not exist within 3 miles. These commenters cited the existing Option statement in Section 2F.01 that provides for extending the distance limit up to a maximum of 15 miles from an interchange for signing eligibility for other services, such as gas, food, and lodging, if those facilities within 3 miles are not available or choose not to participate in the program.

Other commenters stated their specific support of limiting eligibility to pharmacies within 3 miles and not extending that limit. These commenters stated that requiring the pharmacy to be within 3 miles is self-limiting and serve the best interests of travelers in need of pharmacy services. Further, the legislation was specific in directing that eligibility be limited to pharmacies within 3 miles of an interchange on the Federal-aid highway system. Accordingly, the FHWA declines to make any change to the maximum distance of 3 miles as a criterion for eligibility for Specific Service signing as contained in the interim final rule. This discussion and decision also apply to the similar criterion for pharmacy signing eligibility as stated in other applicable sections of Part 2 of the MUTCD.

A State highway authority commented that the phrase "in either direction" in both the last paragraph of the second Standard statement and the first paragraph of the second Guidance statement should be revised to "in any direction" to clarify that pharmacies are not limited to only one direction from an interchange. The FHWA agrees with this comment and makes this editorial change in both places in this final rule. "Any direction" is more accurate and inclusive than "either direction," since there could be more than two directions that can be traveled away from a given interchange.

Discussion of Section 2F.02 Application

In the interim final rule, the first paragraph of the Option statement was modified to remove the list of various services that may be signed on any class of highway. The resulting text of this paragraph in the interim final rule stated, "Specific Service signs may be used on any class of highway." The NCUTCD recommended that this wording is unnecessary because it repeats a similar statement that is in the first Option statement in Section 2F.01. The FHWA agrees that this is an unnecessary duplication and removes the first paragraph of the Option statement in Section 2F.02 in this final rule.

Discussion of Chapter 2H Recreational and Cultural Interest Area Signs

Comments from the NCUTCD, one State highway authority, and one private citizen opposed the addition of the RM–230 24-Hour Pharmacy symbol sign in the series of brown and white recreational and cultural interest area symbol signs. These commenters stated that pharmacy signing is not needed as a recreational area sign.

A national chain drug store company stated its support for adding the RM–230 sign in Chapter 2H, citing consistency with similar brown and white symbol signs for gas, food, and lodging that are included in Chapter 2H. The FHWA agrees and declines to remove the RM–230 sign that was included in Chapter 2H in the interim final rule. Brown and white symbol signs for gas, food, and lodging are included in Chapter 2H because these services are often available within recreational areas such as National Parks, and thus there can be a need to provide guide signing to those facilities from the park entrance road or from other areas within the park. Also, there are certain park roadways in some urbanized areas, such as National Historical Parkways, and some linear park roads such as adjacent to Grand Tetons National Park, that also provide access to nearby towns and cities where 24-hour pharmacies may exist and may meet the criteria for signing. Chapter 2H provides for the use of brown and white General Service signing on park roadways. Therefore, it is appropriate and consistent to include in Chapter 2H a brown and white version of the pharmacy symbol sign for use if General Service signing for a 24-hour pharmacy is needed on a roadway of this type.

Rulemaking Analyses and Notices

Executive Order 12866 (Regulatory Planning and Review) and U.S. DOT Regulatory Policies and Procedures

The FHWA has determined that this action is not a significant regulatory action within the meaning of Executive Order 12866 or significant within the meaning of the U.S. Department of Transportation regulatory policies and procedures. Including 24-hour pharmacies in General and Specific Service signs is required by law (see section 124 Division F, Title I, of Public Law 108–199, January 23, 2004). States and other jurisdictions are not required to install signs for pharmacy services,

but if they elect to do so, these amendments to the MUTCD will create uniformity in how the Pharmacy signs are used on public roads. These changes will not adversely affect, in a material way, any sector of the economy. In addition, these changes will not create a serious inconsistency with any other agency's action or materially alter the budgetary impact of any entitlements, grants, user fees, or loan programs; nor will the changes raise any novel legal or policy issues. Therefore, a full regulatory evaluation is not required.

Regulatory Flexibility Act

In compliance with the Regulatory Flexibility Act (RFA) (Pub. L. 96–354, 5 U.S.C. 601–612) the FHWA has evaluated the effects of this action on small entities and has determined that this action will not have a significant economic impact on a substantial number of small entities. This action adds General Service and Specific Service signing for optional use by States to provide motorist information concerning pharmacies in order to aid the traveling public. States are not included in the definition of small entity set forth in 5 U.S.C. 601. For these reasons, the RFA does not apply and the FHWA certifies that this action will not have a significant economic impact on a substantial number of small entities.

Unfunded Mandates Reform Act of 1995

This final rule will not impose unfunded mandates as defined by the Unfunded Mandates Reform Act of 1995 (Pub. L. 104–4, March 22, 1995, 109 Stat. 48). This final rule will not result in the expenditure by State, local, and tribal governments, in the aggregate, or by the private sector, of $120.7 million or more in any one year (2 U.S.C. 1532). States and other jurisdictions are not required to install signs for pharmacy services, but if they elect to do so, these amendments to the MUTCD will create uniformity in how the signs are used on public roads.

Executive Order 13132 (Federalism)

This action has been analyzed in accordance with the principles and criteria contained in Executive Order 13132, dated August 4, 1999, and it has been determined that this action does not have a substantial direct effect or sufficient federalism implications on States that would limit the policymaking discretion of the States. The FHWA has also determined that this action does not preempt any State law or State regulation or affect the States' ability to discharge traditional State governmental functions.

The MUTCD is incorporated by reference in 23 CFR part 655, subpart F. These amendments are in keeping with the Secretary of Transportation's authority under 23 U.S.C. 109(d), 315, and 402(a) to promulgate uniform guidelines to promote the safe and efficient use of the highway. The overriding safety benefits of the uniformity prescribed by the MUTCD are shared by all of the State and local governments, and changes made to this rule are directed at enhancing safety. To the extent that these amendments override any existing State requirements regarding traffic control devices, they do so in the interest of national uniformity.

Executive Order 12372 (Intergovernmental Review)

Catalog of Federal Domestic Assistance Program Number 20.205, Highway Planning and Construction. The regulations implementing Executive Order 12372 regarding intergovernmental consultation on Federal programs and activities apply to this program.

Paperwork Reduction Act of 1995

This action does not contain a collection of information requirement under the Paperwork Reduction Act of 1995, 44 U.S.C. 3501–3520.

Executive Order 13175 (Tribal Consultation)

The FHWA has analyzed this action under Executive Order 13175, dated November 6, 2000, and believes that it will not have substantial direct effects on one or more Indian tribes; will not impose substantial direct compliance costs on Indian tribal governments; and will not preempt tribal law. The requirements set forth in this final rule do not directly affect one or more Indian tribes. Therefore, a tribal summary impact statement is not required.

Executive Order 13211 (Energy Effects)

The FHWA has analyzed this action under Executive Order 13211, Actions Concerning Regulations That Significantly Affect Energy Supply, Distribution, or Use. We have determined that this is not a significant energy action under that order because it is not a significant regulatory action under Executive Order 12866 and is not likely to have a significant adverse effect on the supply, distribution, or use of energy.

National Environmental Policy Act

The agency has analyzed this action for the purposes of the National Environmental Policy Act of 1969 (42 U.S.C. 4321–4347 *et seq.*) and has determined that it will not have any effect on the quality of the environment.

Executive Order 12630 (Taking of Private Property)

The FHWA has analyzed this final rule under Executive Order 12630, Government Actions and Interference with Constitutionally Protected Property Rights. The FHWA does not anticipate that this action will effect a taking of private property or otherwise have taking implications under Executive Order 12630.

Executive Order 12988 (Civil Justice Reform)

This action meets applicable standards in Sections 3(a) and 3(b)(2) of Executive Order 12988, Civil Justice Reform, to minimize litigation, eliminate ambiguity, and reduce burden.

Executive Order 13045 (Protection of Children)

The FHWA has analyzed this action under Executive Order 13045, Protection of Children from Environmental Health Risks and Safety Risks. The FHWA certifies that this action will not cause an environmental risk to health or safety that may disproportionately affect children.

Regulation Identification Number

A regulation identification number (RIN) is assigned to each regulatory action listed in the Unified Agenda of Federal Regulations. The Regulatory Information Service Center publishes the Unified Agenda in April and October of each year. The RIN contained in the heading of this document can be used to cross reference this action with the Unified Agenda.

List of Subjects in 23 CFR Part 655

Design standards, Grant programs—Transportation, Highways and roads, Incorporation by reference, Signs and symbols, Traffic regulations.

Issued on: November 22, 2004.

Mary E. Peters,

Federal Highway Administrator.

■ In consideration of the foregoing, FHWA adopts as final the interim final rule published May 10, 2004 (69 FR 25828), with the following change:

PART 655—TRAFFIC OPERATIONS

■ 1. The authority citation for part 655 continues to read as follows:

Authority: 23 U.S.C. 101(a), 104, 109(d), 114(a), 217, 315, and 402(a); 23 CFR 1.32; and 49 CFR 1.48(b).

Subpart F—Traffic Control Devices on Federal-Aid and Other Streets and Highways—[Amended]

■ 2. Amend §655.601(a), to read as follows:

§ 655.601 Purpose.

* * * * *

(a) Manual on Uniform Traffic Control Devices for Streets and Highways (MUTCD), 2003 Edition, including Revision No.1, FHWA, dated November 2004. This publication is incorporated by reference in accordance with 5 U.S.C. 552 (a) and 1 CFR part 51 and is on file at the National Archives and Record Administration (NARA). For information on the availability of this material at NARA call (202) 741–6030, or go to *http://www.archives.gov/federal_register/code_of_federal_regulations/ibr_locations.html*. It is available for inspection and copying at the Federal Highway Administration, 400 Seventh Street, SW., Room 3408, Washington, DC 20590, as provided in 49 CFR part 7. The text is also available from the FHWA Office of Transportation Operations' Web site at: *http://mutcd.fhwa.dot.gov*.

* * * * *

[FR Doc. 04–26417 Filed 11–30–04; 8:45 am]

BILLING CODE 4910–22–P

DEPARTMENT OF THE TREASURY

Internal Revenue Service

26 CFR Part 31

[TD 9162]

RIN 1545–BB66

Federal Unemployment Tax Deposits—De Minimis Threshold

AGENCY: Internal Revenue Service (IRS), Treasury.

ACTION: Final regulations.

SUMMARY: This document contains final regulations relating to the deposit of Federal Unemployment Tax Act (FUTA) taxes. The regulations change the accumulated amount of tax liability above which taxpayers must begin depositing Federal unemployment taxes. The regulations affect employers that have an accumulated FUTA tax liability of $500 or less.

DATES: *Effective Date:* These regulations are effective December 1, 2004.

Applicability Date: For dates of applicability, see § 31.6302(c)–3(a)(2) and (3).

FOR FURTHER INFORMATION CONTACT: Heather L. Dostaler, (202) 622–4940 (not a toll-free number).

SUPPLEMENTARY INFORMATION:

Background

This document contains amendments to the Regulations on Employment Taxes and Collection of Income Tax at Source (26 CFR part 31) under section 6302 relating to mode or time of collection. The current rules relating to the deposit of FUTA taxes generally require employers to deposit taxes on a quarterly basis. An exception provides that an employer is not required to make a deposit until accumulated FUTA tax liability exceeds $100.

A notice of proposed rulemaking (REG–144908–02) providing an additional exception to the FUTA tax deposit requirements was published in the **Federal Register** (68 FR 42329) on July 17, 2003. Under the proposed exception, an employer would not be required to deposit FUTA taxes if the employer's liability for other employment taxes (FICA taxes and withheld income taxes) was below the threshold at which deposits were required for those other taxes.

Three written comments were received in response to the notice of proposed rulemaking, but there was no request for a public hearing and a public hearing was not held. All comments were considered and are available for public inspection upon request. After consideration of the written comments, the proposed regulations under section 6302 are adopted as revised by this Treasury decision. The public comments and the revisions are discussed below.

Summary of Comments

Two commentators expressed concern that the creation of an additional exception linked to the deposit rules for other employment taxes will create complexity and that a single exception based on FUTA tax liability is sufficient. One commentator expressed concern regarding the low threshold amounts under both exceptions, and also expressed concern that the proposed exception could be misinterpreted by those accustomed to referring only to the amount of accumulated FUTA taxes.

One commentator suggested that the regulations should exempt household employers who file Schedule H, ''Household Employment Taxes,'' with Form 1040. This comment is outside the scope of these regulations, which are limited to the deposit rules issued under section 6302. Household employment taxes reported on Schedule H are paid with the employer's income taxes.

Explanation of Provisions

After considering the public comments, the IRS and Treasury Department agree that a single exception based on a higher FUTA tax liability threshold is preferable to the exception in the proposed regulations. Accordingly, the final regulations do not include an exception linked to the deposit rules for other employment taxes. Instead, they increase the FUTA tax liability threshold from $100 to $500. Thus, an employer will not be required to make a deposit of FUTA taxes until FUTA tax liability exceeds $500. This change is a simple and straightforward step to reduce the burden on small businesses.

Special Analyses

It has been determined that this Treasury decision is not a significant regulatory action as defined in Executive Order 12866. Therefore, a regulatory assessment is not required. It also has been determined that section 553(b) of the Administrative Procedure Act (5 U.S.C. chapter 5) does not apply to these regulations, and, because these regulations do not impose a collection of information on small entities, the Regulatory Flexibility Act (5 U.S.C. chapter 6) does not apply. Pursuant to section 7805(f) of the Internal Revenue Code, the notice of proposed rulemaking preceding these regulations was submitted to the Chief Counsel for Advocacy of the Small Business Administration for comment on its impact on small business.

Drafting Information

The principal author of these regulations is Heather L. Dostaler of the Office of Associate Chief Counsel, Procedure and Administration (Administrative Provisions and Judicial Practice Division).

List of Subjects in 26 CFR Part 31

Employment taxes, Income taxes, Penalties, Pensions, Railroad retirement, Reporting and recordkeeping requirements, Social Security, Unemployment compensation.

Adoption of Amendments to the Regulations

■ Accordingly, 26 CFR part 31 is amended as follows:

PART 31—EMPLOYMENT TAXES AND COLLECTION OF INCOME TAX AT SOURCE

■ **Paragraph 1.** The authority citation for part 31 continues to read, in part, as follows:

Authority: 26 U.S.C. 7805 * * *

EXHIBIT 18 TO MDOT's MSJ

Washington, DC 20591; telephone: (202) 267–8783.

SUPPLEMENTARY INFORMATION:

Background

The non-compulsory reporting points AYZOL, BORAN, EMSOW, and TIBOY are in use by the Anchorage Center on a daily basis and are needed for the separation of air traffic.

The Rule

This action amends Title 14 Code of Federal Regulations (14 CFR) part 71 by establishing four high altitude reporting points, AYZOL, BORAN, EMSOW, and TIBOY in Alaska. The FAA has determined these reporting points are needed to support the NAS. This action improves air safety and facilitates the management of air traffic in Alaska. Since this action involves the designation of reporting points already in use by ATC, no additional impact will be incurred by the public. Therefore, I find that notice or public procedure under 5 U.S.C. 553(b) is impractical and contrary to the public interest.

Alaskan High Altitude Reporting Points are published in paragraph 7005 of FAA Order 7400.9P September 1, 2006, and effective September 15, 2006, which is incorporated by reference in 14 CFR 71.1. The Alaskan High Altitude Reporting Points listed in this document will be published subsequently in the Order.

The FAA has determined that this regulation only involves an established body of technical regulations for which frequent and routine amendments are necessary to keep them operationally current. Therefore, this proposed regulation: (1) Is not a ''significant regulatory action'' under Executive Order 12866; (2) is not a ''significant rule'' under Department of Transportation (DOT) Regulatory Policies and Procedures (44 FR 11034; February 26, 1979); and (3) does not warrant preparation of a regulatory evaluation as the anticipated impact is so minimal. Since this is a routine matter that will only affect air traffic procedures and air navigation, it is certified that this rule, when promulgated, will not have a significant economic impact on a substantial number of small entities under the criteria of the Regulatory Flexibility Act.

Environmental Review

The FAA has determined that this action qualifies for categorical exclusion under the National Environmental Policy Act in accordance with FAA Order 1050.1E, ''Environmental Impacts: Policies and Procedures,'' paragraph 311a. This airspace action is not expected to cause any potentially significant environmental impacts, and no extraordinary circumstances exist that warrant preparation of an environmental assessment.

List of Subjects in 14 CFR Part 71

Airspace, Incorporation by reference, Navigation (air).

Adoption of the Amendment

■ In consideration of the foregoing, the Federal Aviation Administration amends 14 CFR part 71 as follows:

PART 71—DESIGNATION OF CLASS A, B, C, D, AND E AIRSPACE AREAS; AIR TRAFFIC SERVICE ROUTES; AND REPORTING POINTS

■ 1. The authority citation for part 71 continues to read as follows:

Authority: 49 U.S.C. 106(g), 40103, 40113, 40120; E.O. 10854, 24 FR 9565, 3 CFR, 1959–1963 Comp., p. 389.

§ 71.1 [Amended]

■ 2. The incorporation by reference in 14 CFR 71.1 of FAA Order 7400.9P, Airspace Designations and Reporting Points, dated September 1, 2006, and effective September 15, 2006, is amended as follows:

Paragraph 7005 Alaskan High Altitude Reporting Points.

* * * * *

7001 [Amend]

AYZOL AK [New]

* * * * *

BORAN AK [New]

* * * * *

EMSOW AK [New]

* * * * *

TIBOY AK [New]

* * * * *

Issued in Washington, DC on December 7, 2006.

Edith V. Parish,

Acting Manager, Airspace and Rules.

[FR Doc. E6–21190 Filed 12–13–06; 8:45 am]

BILLING CODE 4910–13–P

DEPARTMENT OF TRANSPORTATION

Federal Highway Administration

23 CFR Part 655

[FHWA Docket No. FHWA–2005–23182]

RIN 2125–AF16

Traffic Control Devices on Federal-Aid and Other Streets and Highways; Standards

AGENCY: Federal Highway Administration (FHWA), DOT.

ACTION: Final rule.

SUMMARY: The FHWA is revising its regulation that prescribes procedures for obtaining basic uniformity of traffic control devices on Federal-aid and other streets and highways. This final rule makes some nomenclature changes, removes outdated references, and provides clarification on the meaning of roads ''open to public travel'' and ''substantial conformance.''

DATES: Effective January 16, 2007.

FOR FURTHER INFORMATION CONTACT: Mr. Hari Kalla, Office of Transportation Operations, (202) 366–5915, or Mr. Raymond Cuprill, Office of the Chief Counsel, (202) 366–0791, U.S. Department of Transportation, Federal Highway Administration, 400 Seventh Street, SW., Washington, DC 20590. Office hours are from 7:45 a.m. to 4:15 p.m. e.t., Monday through Friday, except Federal holidays.

SUPPLEMENTARY INFORMATION:

Electronic Access

This document, the notice of proposed rulemaking (NPRM), and all of the comments received may be viewed online through the Document Management System (DMS) at *http://dms.dot.gov.* The DMS is available 24 hours each day, 365 days each year. Electronic submission and retrieval help and guidelines are available under the help section of the Web site.

An electronic copy of this document may also be downloaded by accessing the Office of the Federal Register's home page at *http://www.archives.gov* or the Government Printing Office's Web page at *http://www.gpoaccess.gov/nara.* An electronic version of this document may also be downloaded at the FHWA Web site: *http://mutcd.fhwa.dot.gov.*

Background

The Manual on Uniform Traffic Control Devices (MUTCD), also referred to as the Manual, is developed and approved by the Federal Highway Administration and recognized as the national standard for all traffic control

devices installed on any street, highway, or shared-use path open to public travel in accordance with 23 U.S.C. 109(d) and 402(a). It is incorporated by reference into the Code of Federal Regulations at 23 CFR part 655. The FHWA proposed a number of changes to 23 CFR 655 in order to update its regulations. The FHWA proposed removing certain outdated references, making certain nomenclature changes, and providing clarification of certain terms.

Discussion of Comments Received to the Notice of Proposed Rulemaking (NPRM)

On April 25, 2006, the FHWA published a NPRM in the **Federal Register** at 71 FR 23877 to provide an opportunity for public comment on the proposed changes to 23 CFR part 655. In response to the NPRM, the FHWA received comments to the docket from 20 entities, including 4 national associations, 8 State transportation agencies (California, Maryland, Michigan, North Carolina, Ohio, Oregon, Washington, and Minnesota), 2 city transportation agencies (City of Phoenix and City of Tucson), 1 private company (KDD and Associates), and 4 private individuals. The national associations included the American Association of State Highway and Transportation Officials (AASHTO), the Advocates for Highway and Auto Safety (AHAS), the American Traffic Safety Services Association (ATSSA), and the National Committee on Uniform Traffic Control Devices (NCUTCD). One of the 20 docket submissions was a request from the NCUTCD for a time extension of the docket comment period. In response to this request, on June 14, 2006, the FHWA published a notice in the **Federal Register** at 71 FR 34297 to extend the comment closing date from June 26, 2006, to July 21, 2006.

While four of the docket submissions addressed all of the proposed changes, the majority of the letters to the docket addressed specific proposed changes. The FHWA considered each of these comments in adopting this final rule. These issues are identified and addressed under the appropriate section below.

Section-by-Section Discussion of Changes

Section 655.601 Purpose

The FHWA is removing the reference to the Standard Alphabets for Highway Signs (SAHS) by removing paragraph (b). The SAHS, 1966 Edition, is outdated and no longer exists as a separate document. The FHWA now publishes the SAHS as part of the Standard Highway Signs (SHS) Book. The SHS Book is referenced in MUTCD Section 1A.11 and throughout MUTCD Part 2. The SHS Book is also posted on the MUTCD Web page at *http://mutcd.fhwa.dot.gov.* The FHWA received five comments in support of this change and no comments opposed. This change will be adopted without modification in the final rule.

Section 655.603 Standards

''Open to Public Travel''

The FHWA is revising the language in 23 CFR 655.603(a) to clarify that, for the purpose of MUTCD applicability, the phrase ''open to public travel'' includes toll roads and roads within shopping centers, parking lots, airports, sports arenas, and other similar business and recreation facilities that are privately owned but where the public is allowed to travel without access restrictions. Military bases and other gated properties where access is restricted and private railroad grade crossings are not included in the term ''open to public travel.''

Eleven comments generally supported this clarification but offered potential areas of concern for consideration by the FHWA, and one comment opposed this clarification. Based on the comments received, the FHWA has modified the clarification to include parking lots on the list of examples where the term ''open to public travel'' applies, and to include military bases and other gated properties as examples of what is not included in the term. We have also indicated that the clarification of ''open to public travel'' is for the purpose of MUTCD applicability only. It is important to note that FHWA's intent is only to provide some general examples of what is meant by ''open to public travel'' because we recognize that it would not be possible to list them all.

Of the 11 docket comments in support of this clarification, some expressed the following concerns: (1) This could create an unreasonable State responsibility to mandate compliance without the necessary authority; (2) Without enforcement, the intent of this change would be undermined; (3) It is not reasonable to expect all private property owners to have the means and expertise to place and maintain standard traffic control devices; and (4) The language needs to consider State law.

The FHWA does not believe it is necessary for State and/or local highway agencies to have specific authority or enforcement responsibility for traffic control devices on private roads. This change to 23 CFR part 655 does not require State or local agencies to police the private properties open to public travel to ensure compliance with the MUTCD. However, this change does make it clear that private roads open to public travel are subject to the same traffic control standards as public streets and highways. Therefore, owners or parties responsible for such private roads are encouraged to bring the traffic control devices into compliance with the MUTCD and other applicable State Manuals.

The FHWA believes that the change to 23 CFR 655.603(a) will clarify the application of this term, create awareness of the applicability of the MUTCD to certain private properties, improve safety, and increase the uniformity of traffic control devices on roads used by the general public.

''Substantial Conformance''

23 CFR 655.603(b)(1) provides that where State or other Federal agency MUTCDs or supplements are required, they shall be in ''substantial conformance'' with the National MUTCD as approved by the FHWA Division Administrator. The FHWA proposed to define ''substantial conformance'' to mean that the State MUTCD or supplement shall conform as a minimum to the standard statements included in the National MUTCD. Standard statements in the MUTCD describe required practices and are indicated by the term ''shall.'' The FHWA also proposed to define ''substantial conformance'' to mean that the guidance statements contained in the National MUTCD also are expected to be in the State Manual or supplement unless the reason for not including it is satisfactorily explained based on engineering judgment or a documented engineering study. Guidance statements in the MUTCD describe recommended practices and are indicated by the term ''should.'' Under the proposed definition, a State Manual or supplement could not be less prescriptive than the MUTCD but it could be more prescriptive; meaning, for example, that a guidance or ''should'' statement in the National MUTCD could not be an option in the State Manual, but that it could be a standard or ''shall'' statement. The Division Administrator and the FHWA Associate Administrator of the Federal Lands Highway Program have the flexibility to determine on a case-by-case basis the degree of variation allowed.

Seven comments generally supported this change but offered potential areas of concern for consideration by the FHWA, and 10 comments opposed this proposed change. Some of the areas of

concern from those who supported the change included the following: (1) Agree that there needs to be a definition but do not agree that all ''shalls'' must be included. (2) Agree, but what happens if States have specific legislation which conflicts with the standards. (3) The proposed definition is fundamentally sound, but will be challenging to meet because of statutory laws that differ from the MUTCD. (4) This change puts unfair liability on cities, particularly the part of the definition that suggests State Manuals or supplements cannot be less prescriptive than the National MUTCD. In urban conditions, there may be any number of reasons why a less prescriptive proposal would still meet the goal of providing adequate uniformity (*i.e.*, the MUTCD requires overhead signs for all HOV but in urban areas this may not be possible).

Some of the comments from those opposed to this change included the following: (1) A State's right to use alternative techniques that are equal to or better than the MUTCD should be protected. (2) The definition does not allow flexibility to accommodate State and local issues. (3) States should retain the option to deviate from standard statements. (4) In some situations, legislative action would put the State in conflict with the National MUTCD.

The FHWA agrees with the comments above that suggest this regulation should address the impact of State laws that may force non-conformance with the National MUTCD and should allow more flexibility to accommodate State and local issues. Therefore, in addition to the definition provided for substantial conformance as it applies to the standard statements in the National MUTCD, the FHWA is also adding the following sentence to 23 CFR 655.603(b)(1) to address these comments: ''The FHWA Division Administrators and Associate Administrator for the Federal Lands Highway Program may grant exceptions in cases where a State MUTCD or supplement cannot conform to standard statements in the National MUTCD because of the requirements of a specific State law that was in effect prior to the effective date of this final rule, provided that the Division Administrator or Associate Administrator determines based on information available and documentation received from the State that the non-conformance does not create a safety concern.'' In addition to the definition for substantial conformance as it applies to the guidance statements in the National MUTCD, the FHWA is modifying the sentence to read: ''The guidance statements contained in the National MUTCD shall also be in the State Manual or supplement unless the reason for not including it is satisfactorily explained based on engineering judgment, specific conflicting State law, or a documented engineering study.'' Finally, since the FHWA is adding flexibility in the description of substantial conformance as it relates to standard and guidance statements in the National MUTCD, the FHWA agrees that describing State Manuals or supplements in terms of being either ''less prescriptive'' or ''more prescriptive'' is not necessary and the language has been removed from this final rule.

These additional comments were also submitted to the docket and were handled as follows: (1) Defining substantial conformance should be left up to the Division Office in each State. (2) Eliminates right of practitioner to exercise engineering judgment and destroys the only current method by which FHWA employees get to consult and exchange ideas with practitioners. (3) States should not have to incur cost of engineering study to deviate from guidance statements. The FHWA believes that the concern about the Division Office involvement is already addressed because the Division Administrator is an integral part of the process for adopting State Manuals or supplements and this does not change by incorporating any of these changes in the final rule. The FHWA believes that the comment about ''engineering judgment'' is also addressed in that States have a choice of using engineering judgment to explain deviations from the guidance statements and unlike an engineering study, engineering judgment does not involve a cost. One comment suggested that FHWA should conduct a thorough review of State exceptions or supplements and search for ways to improve the 2003 MUTCD before making this change. The FHWA believes that this comment is beyond the intent of this rulemaking activity.

''Issuance Date''

In the current § 655.603(b)(1), States or other Federal agencies are required to adopt the National MUTCD within 2 years of issuance any changes. The term ''issuance date'' is incorrect nomenclature and the FHWA is changing this term to ''effective date.'' The effective date occurs 30 days after a final rule is published in the **Federal Register** in order to allow parties affected by the rule a reasonable time to prepare for the effective date of a rule, or to take any other action which a final rule may prompt. The FHWA is also moving this discussion to new paragraph (b)(3). The FHWA received four comments in support of this change and no comments opposed. This change will be adopted without modification in the final rule.

Two-Year Adoption Period for States That Automatically Adopt the MUTCD

The FHWA is revising the second sentence in § 655.603(b)(1) to include language that will provide the Division Administrators and the Associate Administrator of the Federal Lands Highway Program the flexibility to allow States that automatically adopt the MUTCD immediately upon the effective date, the option of a 2-year adoption period. This will give States the opportunity to use their existing stocks of certain noncompliant traffic control devices and complete construction projects with previously approved plans that have certain non-compliant traffic control devices under the new MUTCD. The FHWA is also moving this discussion to new § 655.603(b)(3). The FHWA received five comments in support of this change and no comments opposed. This change will be adopted without modification in the final rule.

Reorganization and Editorial Changes

In 23 CFR 655.603(b)(2), the FHWA is combining the first sentence, which gives the FHWA Associate Administrator of the Federal Lands Highway Program approval authority for Federal land management agencies' MUTCDs, with the discussion in 23 CFR 655.603(b)(1) which discusses the Division Administrator's authority to approve State MUTCDs and supplements. The second sentence in paragraph (b)(2) will now become the first and only sentence for paragraph (b)(2).

The FHWA is amending § 655.603(c) by removing footnote number and footnote reference ''2'' and adding in its place footnote number and footnote reference ''1''.

The FHWA is moving the discussion in § 655.603(d)(4) to § 655.603(d)(1). The discussion in § 655.603(d)(4) about the FHWA's option to establish target dates for achieving compliance with changes in the MUTCD is more appropriate for inclusion in § 655.603(d)(1). Therefore, § 655.603(d)(4) is removed.

The FHWA is removing § 655.603(e). This paragraph was originally included when the Specific Service Sign Program was first adopted on January 23, 1969, so that interested persons would be directed to the MUTCD for more details. Since the Specific Service Sign Program has been in the MUTCD for 35 years and

the public is very familiar with this program, the FHWA believes that this information is no longer necessary or appropriate for inclusion in Title 23, Code of Federal Regulations.

The FHWA received three comments in support and no comments opposed to the above reorganization and editorial changes. These changes will be adopted without modification in the final rule.

Section 655.604 Achieving Basic Uniformity

In § 655.604, paragraphs (a) and (b) indicate that the systematic upgrading of existing traffic control devices and installation of devices should be based on inventories made in accordance with 23 CFR 1204.4. That section refers to a program required by the former Highway Safety Program Standard Number 13, Traffic Engineering Services (23 CFR 1204.4), a NHTSA regulation that no longer exists. Therefore, the FHWA is removing this reference to 23 CFR 1204.4. The FHWA received five comments in support of this change and no comments opposed. Two of the comments that supported this change and understood why we are removing the outdated reference, did not agree with downgrading the contents of 23 CFR 1204.4 from standards to guidelines. This particular comment is outside the scope of this effort to update the information in 23 CFR part 655 and has not been addressed in this document. This change will be adopted without modification in the final rule.

Rulemaking Analysis and Notices

Executive Order 12866 (Regulatory Planning and Review) and U.S. DOT Regulatory Policies and Procedures

The FHWA has determined that this action would not be a significant regulatory action within the meaning of Executive Order 12866 or significant within the meaning of U.S. Department of Transportation regulatory policies and procedures. These changes are not anticipated to adversely affect, in any material way, any sector of the economy. The FHWA expects that these changes will provide clarity at little or no additional expense to public agencies or the motoring public. In addition, these changes would not create a serious inconsistency with any other agency's action or materially alter the budgetary impact of any entitlements, grants, user fees, or loan programs. Therefore, a full regulatory evaluation is not required.

Regulatory Flexibility Act

In compliance with the Regulatory Flexibility Act (Pub. L. 96–354, 5 U.S.C. 601–612), the FHWA has evaluated the effects of these changes on small entities and has determined that this action would not have a significant economic impact on a substantial number of small entities.

This rule updates the authorities of the FHWA and referenced documents regarding MUTCD compliance on existing highways. Such updates will provide transportation entities with the appropriate points of contact regarding the MUTCD. The FHWA hereby certifies that these revisions would not have a significant economic impact on a substantial number of small entities.

Unfunded Mandates Reform Act of 1995

This final rule would not impose unfunded mandates as defined by the Unfunded Mandates Reform Act of 1995 (Pub. L. 104–4, 109 Stat. 48, March 22, 1995). This action will not result in the expenditure by State, local, and tribal governments, in the aggregate, or by the private sector, of $128.1 million or more in any one year (2 U.S.C. 1532).

Executive Order 13132 (Federalism)

This action has been analyzed in accordance with the principles and criteria contained in Executive Order 13132 dated August 4, 1999, and the FHWA has determined that this action would not have sufficient federalism implications to warrant the preparation of a federalism assessment. The FHWA has also determined that this rulemaking will not preempt any State law or State regulation or affect the States' ability to discharge traditional State governmental functions.

Executive Order 13175 (Tribal Consultation)

The FHWA has analyzed this action under Executive Order 13175, dated November 6, 2000, and believes that it would not have substantial direct effects on one or more Indian tribes; would not impose substantial direct compliance costs on Indian tribal governments; and would not preempt tribal law. Therefore, a tribal summary impact statement is not required.

Executive Order 13211 (Energy Effects)

The FHWA has analyzed this action under Executive Order 13211, Actions Concerning Regulations That Significantly Affect Energy Supply, Distribution, or Use. We have determined that it is not a significant energy action under that order because it is not likely to have a significant adverse effect on the supply, distribution, or use of energy. Therefore, a Statement of Energy Effects under Executive Order 13211 is not required.

Executive Order 12372 (Intergovernmental Review)

Catalog of Federal Domestic Assistance program Number 20.205, Highway Planning and Construction. The regulations implementing Executive Order 12372 regarding intergovernmental consultation on Federal programs and activities apply to this program.

Paperwork Reduction Act

Under the Paperwork Reduction Act of 1995 (PRA) (44 U.S.C. 3501, *et seq.*), Federal agencies must obtain approval from the Office of Management and Budget (OMB) for each collection of information they conduct, sponsor, or require through regulations. The FHWA has determined that this action does not contain collection information requirements for purposes of the PRA.

Executive Order 12988 (Civil Justice Reform)

This action meets applicable standards in sections 3(a) and 3(b)(2) of Executive Order 12988, Civil Justice Reform, to minimize litigation, eliminate ambiguity, and reduce burden.

Executive Order 13045 (Protection of Children)

The FHWA has analyzed this action under Executive Order 13045, Protection of Children from Environmental Health Risks and Safety Risks. The FHWA certifies that this action would not concern an environmental risk to health or safety that may disproportionately affect children.

Executive Order 12630 (Taking of Private Property)

The FHWA does not anticipate that this action would affect a taking of private property or otherwise have taking implications under Executive Order 12630, Governmental Actions and Interference with Constitutionally Protected Property Rights.

National Environmental Policy Act

The agency has analyzed this action for the purpose of the National Environmental Policy Act of 1969 (42 U.S.C. 4321–4347) and has determined that it would not have any effect on the quality of the environment.

Regulation Identification Number

A regulation identification number (RIN) is assigned to each regulatory action listed in the Unified Agenda of Federal Regulations. The Regulatory Information Service Center publishes the Unified Agenda in April and

October of each year. The RIN contained in the heading of this document can be used to cross reference this action with the Unified Agenda.

List of Subjects in 23 CFR Part 655

Design standards, Grant programs—transportation, Highways and roads, Incorporation by reference, Signs, Traffic regulations.

Issued on: December 7, 2006.

J. Richard Capka,

Federal Highway Administrator.

■ In consideration of the foregoing, the FHWA amends title 23, Code of Federal Regulations, part 655, subpart F as follows:

PART 655—TRAFFIC OPERATIONS

■ 1. The authority citation for part 655 continues to read as follows:

Authority: 23 U.S.C. 101(a), 104, 109(d), 114(a), 217, 315, and 402(a); 23 CFR 1.32; and, 49 CFR 1.48(b).

§ 655.601 [Amended]

■ 2. Amend § 655.601 by removing paragraph (b) and by redesignating paragraphs (c) and (d) as paragraphs (b) and (c), respectively.

■ 3. Amend § 655.603 by revising paragraphs (a) and (b); amending paragraph (c), by redesignating footnote 2 as footnote 1; by revising paragraph (d)(1); and by removing paragraphs (d)(4) and (e) to read as follows:

§ 655.603 Standards.

(a) *National MUTCD.* The MUTCD approved by the Federal Highway Administrator is the national standard for all traffic control devices installed on any street, highway, or bicycle trail open to public travel in accordance with 23 U.S.C. 109(d) and 402(a). For the purpose of MUTCD applicability, open to public travel includes toll roads and roads within shopping centers, parking lot areas, airports, sports arenas, and other similar business and/or recreation facilities that are privately owned but where the public is allowed to travel without access restrictions. Military bases and other gated properties where access is restricted and private highway-rail grade crossings are not included in this definition.

(b) *State or other Federal MUTCD.* (1) Where State or other Federal agency MUTCDs or supplements are required, they shall be in substantial conformance with the National MUTCD. Substantial conformance means that the State MUTCD or supplement shall conform as a minimum to the standard statements included in the National MUTCD. The FHWA Division Administrators and Associate Administrator for the Federal Lands Highway Program may grant exceptions in cases where a State MUTCD or supplement cannot conform to standard statements in the National MUTCD because of the requirements of a specific State law that was in effect prior to the effective date of this final rule, provided that the Division Administrator or Associate Administrator determines based on information available and documentation received from the State that the non-conformance does not create a safety concern. The guidance statements contained in the National MUTCD shall also be in the State Manual or supplement unless the reason for not including it is satisfactorily explained based on engineering judgment, specific conflicting State law, or a documented engineering study. The FHWA Division Administrators shall approve the State MUTCDs and supplements that are in substantial conformance with the National MUTCD. The FHWA Associate Administrator of the Federal Lands Highway Program shall approve other Federal land management agencies MUTCDs and supplements that are in substantial conformance with the National MUTCD. The FHWA Division Administrators and the FHWA Associate Administrators for the Federal Lands Highway Program have the flexibility to determine on a case-by-case basis the degree of variation allowed.

(2) States and other Federal agencies are encouraged to adopt the National MUTCD in its entirety as their official Manual on Uniform Traffic Control Devices.

(3) States and other Federal agencies shall adopt changes issued by the FHWA to the National MUTCD within two years from the effective date of the final rule. For those States that automatically adopt the MUTCD immediately upon the effective date of the latest edition or revision of the MUTCD, the FHWA Division Administrators have the flexibility to allow these States to install certain devices from existing inventory or previously approved construction plans that comply with the previous MUTCD during the two-year adoption period.

* * * * *

(d) *Compliance*—(1) *Existing highways.* Each State, in cooperation with its political subdivisions, and Federal agency shall have a program as required by 23 U.S.C. 402(a), which shall include provisions for the systematic upgrading of substandard traffic control devices and for the installation of needed devices to achieve conformity with the MUTCD. The FHWA may establish target dates of achieving compliance with changes to specific devices in the MUTCD.

* * * * *

■ 4. Revise the first sentence of paragraph (a) and the first sentence of paragraph (b) of § 655.604 to read as follows:

§ 655.604 Achieving basic uniformity.

(a) *Programs.* Programs for the orderly and systematic upgrading of existing traffic control devices or the installation of needed traffic control devices on or off the Federal-aid system should be based on inventories made in accordance with the Highway Safety Program Guideline 21, ''Roadway Safety.'' * * *

(b) *Inventory.* An inventory of all traffic control devices is recommended in the Highway Safety Program Guideline 21, ''Roadway Safety.'' * * *

[FR Doc. E6–21228 Filed 12–13–06; 8:45 am]

BILLING CODE 4910–22–P

PENSION BENEFIT GUARANTY CORPORATION

29 CFR Parts 4050 and 4281

RIN 1212–AB08

Mortality Assumptions

AGENCY: Pension Benefit Guaranty Corporation.

ACTION: Direct final rule.

SUMMARY: This document makes changes to the mortality assumptions under parts 4050 (Missing Participants) and 4281 (Duties of Plan Sponsor Following Mass Withdrawal) of PBGC's regulations. In a final rule published in the **Federal Register** on December 2, 2005, PBGC amended part 4044 (Allocation of Assets in Single-employer Plans) of its regulations to update mortality tables used for certain valuations for single-employer plans. Because of the dependence of certain valuations under part 4050 on part 4044, amendments updating the mortality assumptions under part 4050 are needed. This rule also makes a minor conforming amendment to the mortality assumptions in part 4281.

DATES: Effective February 27, 2007, without further notice, unless PBGC receives significant adverse comment by January 16, 2007. For a discussion of applicability of this rule, see **SUPPLEMENTARY INFORMATION**.

ADDRESSES: Comments, identified by RIN number 1212–AB08, may be submitted by any of the following methods:

EXHIBIT 19 TO MDOT's MSJ

DEPARTMENT OF TRANSPORTATION

Federal Highway Administration

23 CFR Part 655

[FHWA Docket No. FHWA–2007–28977]

RIN 2125–AF22

National Standards for Traffic Control Devices; the Manual on Uniform Traffic Control Devices for Streets and Highways; Revision

AGENCY: Federal Highway Administration (FHWA), (DOT).

ACTION: Final rule.

SUMMARY: The Manual on Uniform Traffic Control Devices for Streets and Highways (MUTCD) (also referred to as ''the Manual'') is incorporated by reference within our regulations, approved by the Federal Highway Administration, and recognized as the national standard for traffic control devices used on all public roads. The purpose of this final rule is to revise standards, guidance, options, and supporting information relating to the traffic control devices in all parts of the MUTCD to expedite traffic, promote uniformity, improve safety, and incorporate technology advances in traffic control device application. The MUTCD, with these changes incorporated, is being designated as the 2009 Edition of the MUTCD.

DATES: *Effective Date:* This final rule is effective January 15, 2010. The incorporation by reference of the publication listed in this regulation is approved by the Director of the Office of the Federal Register as of January 15, 2010.

FOR FURTHER INFORMATION CONTACT: Mr. Hari Kalla, Office of Transportation Operations, (202) 366–5915; or Mr. Raymond Cuprill, Office of the Chief Counsel, (202) 366–0791, Federal Highway Administration, 1200 New Jersey Ave., SE., Washington, DC 20590. Office hours are from 7:45 a.m. to 4:15 p.m., e.t., Monday through Friday, except Federal holidays.

SUPPLEMENTARY INFORMATION:

Electronic Access

This document, the notice of proposed amendments (NPA), and all comments received may be viewed online through the Federal eRulemaking portal at: *http://www.regulations.gov.* Electronic submission and retrieval help and guidelines are available under the help section of the Web site. It is available 24 hours each day, 365 days each year. Please follow the instructions. An electronic copy of this document may also be downloaded from the Office of the Federal Register's home page at: *http://www.archives.gov* and the Government Printing Office's Web page at: *http://www.access.gpo.gov/nara.*

Background

On January 2, 2008, at 73 FR 268, the FHWA published an NPA proposing revisions to the MUTCD. Those changes were proposed to be designated as the next edition of the MUTCD. Interested persons were invited to submit comments to FHWA Docket No. FHWA–2007–28977. Based on the comments received and its own experience, the FHWA is issuing a final rule and is designating the MUTCD, with these changes incorporated, as the 2009 Edition of the MUTCD.

The text of the 2009 Edition of the MUTCD, with these final rule changes incorporated, and documents showing the adopted changes from the 2003 Edition, are available for inspection and copying, as prescribed in 49 CFR part 7, at the FHWA Office of Transportation Operations (HOTO–1), 1200 New Jersey Avenue, SE., Washington, DC 20590. Furthermore, the text of the 2009 Edition of the MUTCD, with these final rule changes incorporated, and documents showing the adopted changes from the 2003 Edition, are available on the FHWA's MUTCD Internet site *http://mutcd.fhwa.dot.gov.* The previous version of the MUTCD, the 2003 MUTCD with Revisions 1 and 2 incorporated, is also available on this Internet site. The 2009 Edition supersedes all previous editions and revisions of the MUTCD.

Summary of Comments

The FHWA received 1,841 letters submitted to the docket, containing over 15,000 individual comments on the MUTCD in general or on one or more parts, chapters, sections, or paragraphs contained in the MUTCD. The National Committee on Uniform Traffic Control Devices (NCUTCD), State Departments of Transportation (DOTs), city and county government agencies, Federal government agencies, consulting firms, private industry, associations, other organizations, and individual private citizens submitted comments. The FHWA has reviewed and analyzed all of the comments received. The NCUTCD comments included support for all items in the NPA except as otherwise indicated. The significant comments and summaries of the FHWA's analyses and determinations are discussed below. General comments and significant global changes throughout the MUTCD are discussed first, followed by discussion of significant comments and adopted changes in each of the individual Parts of the MUTCD. All of the items discussed below were proposed in the NPA unless otherwise indicated.

Discussion of General Amendments to the MUTCD

1. The FHWA received several general comments from State DOTs, local agencies, associations, and citizens regarding the NPA. Two local agencies, a traffic control device vendor, an association, and two citizens expressed general support for the changes in the MUTCD, such as incorporating into the MUTCD recommendations of the Older Driver Handbook, the Synthesis of Non-MUTCD Traffic Signs, and new technologies. In addition to the overall general comments, some of the commenters had specific comments that relate to the entire MUTCD. Those topics that the FHWA considers to be substantive and non-editorial in nature are discussed in the following items within this section.

2. The NCUTCD submitted a letter suggesting that the FHWA issue a supplemental notice of proposed amendments (SNPA). Fourteen State DOTs, AASHTO, and the Chair of the NCUTCD submitted duplicate copies of the NCUTCD's letter in support of an SNPA. In addition, three State DOTs, a county DOT, an NCUTCD member, and a traffic engineering consultant also stated support for the NCUTCD's letter. The NCUTCD's letter included the following statements in support of an SNPA:

1. The NPA did not include a quantified assessment of the economic impacts of the proposed changes on public agencies and the private sector.

2. More details are needed regarding some of the proposed changes and some of the proposed changes need to be reorganized or reformatted.

3. The extent of the proposed changes and the number of expected comments is such that the final rule would be significantly different from the NPA version, and would therefore constitute a new document which should be reviewed as an SNPA prior to becoming a final rule.

4. Because of the interconnectivity between the language in the various sections, chapters, and parts, a change in one section might have impacts on multiple other sections. Therefore, an SNPA is needed in order to have the opportunity to review additional changes resulting from responses to comments to assess whether they are consistent with each other.

5. There is precedent for issuing multiple proposed rules for changes to the MUTCD.

6. It is essential that the FHWA provide an opportunity to review the FHWA responses to the docket so that implementation and liability changes can be identified, assessed, and discussed before a final rule is published.

7. An SNPA is needed to assess the FHWA response to comments and evaluate the level of engineering flexibility that will be provided in the next edition of the MUTCD.

Five State DOTs, a local agency, nine toll road operators, a major retail business owner, and a traffic engineering consultant also expressed general support for an SNPA.

Two bicycle associations, a traffic engineering consultant, and a citizen disagreed with the need for an SNPA and requested that FHWA publish a final rule. The two bicycle associations suggested that if an SNPA were to be published instead of a final rule, the FHWA should issue Interim Approvals for all new devices and applications in Part 9 so that public agencies can begin installing them to improve conditions for bicyclists.

The FHWA carefully reviewed and considered the concerns both for and against issuing an SNPA and decided that an SNPA is not necessary or appropriate. The FHWA determined that the seven specific statements cited by the NCUTCD in support of an SNPA do not justify delaying the finalization of a new edition of the MUTCD that will significantly improve the safety and efficiency of highway travel. Additionally, in making decisions in the final rule regarding the various technical issues cited in the letters from the NCUTCD and others who requested an SNPA, the FHWA has taken into consideration the concerns expressed. To address the concerns, in most cases the FHWA has revised certain provisions to make them less restrictive or has deleted from the final rule certain provisions that were proposed in the NPA, has reorganized and reformatted material to clarify it, and has eliminated specific target compliance dates or established long compliance periods consistent with service lives of the devices. In most cases the new provisions apply only to new installations or reconstructions of devices, and the provisions for systematic upgrading cited in Section 655.603(d)(1) of title 23, Code of Federal Regulations [1] allow existing noncompliant devices in good condition to remain in place until the end of their service lives, thus minimizing any impacts of new requirements on State or local highway agencies and owners of private roads open to public travel.

3. The FHWA received comments from three local agency DOTs, an association of counties, and a citizen suggesting that there are too many proposed changes to the MUTCD and that many of the changes are too complex. The FHWA believes that continuously updating the MUTCD is necessary in order to incorporate advances in technology, new research results, and state of the practice in traffic control devices. Since the MUTCD's purpose is to improve safety and efficiency, the MUTCD must be revised to remain current with these new technologies and applications.

4. A State DOT, 10 local agency DOTs, an association representing local DOTs, and a traffic engineering consultant expressed concern that there were too many new STANDARD statements (or GUIDANCE statements elevated to STANDARD statements) in the proposed revisions, and that the large number of changes places an undue financial burden on agencies. The FHWA believes that the changes to the MUTCD will provide improved uniformity in traffic control device applications across the country, thereby increasing safety, and that the additional Standards will not result in undue financial burden on agencies. As discussed under Amendments to the MUTCD Introduction, in the vast majority of cases existing devices in good condition that are not in compliance with new standards can remain in place for the remainder of their service life, thus minimizing any impacts of new requirements on State or local highway agencies and owners of private roads open to public travel.

5. The FHWA received comments from a State DOT and three city DOTs opposing the scope of the changes within the MUTCD and suggesting that many of the changes are more appropriate for a handbook, rather than the MUTCD. Several of the commenters expressed concern that the MUTCD was becoming more prescriptive in nature, thus limiting creativity, flexibility, and judgment. The FHWA believes that the widespread use of the MUTCD by State and local agencies and design professionals, and its importance as a Federal regulation for traffic control devices justifies the level of detail incorporated in the MUTCD. Further, the FHWA believes that sufficient justification has been provided for any new standards and that ample latitude for flexibility and judgment is provided in the application of Guidance and Options in the MUTCD.

6. The FHWA adopts a new cover page for this edition of the MUTCD that maintains general consistency with covers of previous editions, but with changes to give it a distinctive appearance to minimize the possibility of confusion by users. The date of this edition, which is identified on the cover and elsewhere within the document, is the year in which the final rule is issued.

7. The FHWA includes paragraph numbers in the margins for each paragraph of each section for the final page images of this edition of the MUTCD. The FHWA includes these paragraph numbers in order to aid practitioners in referencing the MUTCD, as well as to assist readers of future MUTCD notices of proposed amendments. The FHWA posted sample pages on its MUTCD Web site showing four possible methods for paragraph numbering and as part of the NPA asked interested persons to review the sample pages and provide comments to the docket on the paragraph numbering options. Based on comments, the FHWA numbers the paragraphs in the manner that was shown as Alternative #3, with dark numerals outside the margin, and in a font that is easy to read without being distracting.

8. The NCUTCD, two State DOTs, and a citizen provided comments regarding the format of MUTCD pages, print style, numbering of sections, etc. Based on a comment from the NCUTCD, the FHWA changes the font of GUIDANCE statements to italics to distinguish them from OPTION and SUPPORT statements. As part of this change, the FHWA eliminates italics from the titles of figures and tables.

9. The FHWA received several comments regarding the use of metric units in the MUTCD. The NCUTCD, six State DOTs, ATSSA, an NCUTCD member, and two traffic engineering consultants suggested that the metric units be removed in their entirety or that the English units precede the metric units, and a traffic engineering consultant suggested that the MUTCD continue to be issued with both systems of measurement. Because metric units are not currently used in the U.S. for traffic control device applications, the FHWA determines that only English units are to be used in the MUTCD text, figures, and tables and places metric

[1] The Code of Federal Regulations can be viewed at the following Internet Web site: *http://www.gpoaccess.gov/CFR/*.

equivalent values for all English unit values used in the MUTCD in a new Appendix A2 in this final rule. This preserves the soft conversions of the English to metric values in the MUTCD while also providing a document that is less cumbersome to read and apply. This change is consistent with an Informational Memorandum from FHWA's Executive Director, dated November 25, 2008,[2] stating that use of metric measurements will now be optional in all FHWA documents, including letters, memoranda, publications, reports, and information on FHWA Web sites.

10. Throughout the MUTCD, the FHWA incorporates minor changes in text, figures, and tables for grammatical or style consistency, to improve consistency with related text or figures, to improve clarity, or to correct minor errors. Where the FHWA adds a new chapter within a part of the MUTCD, a new section within a chapter of the MUTCD, or a new item within a listing, the chapters or sections or items that follow the addition are renumbered or relettered accordingly. All Tables of Contents, Lists of Figures, Lists of Tables, and page headers and footers are revised as appropriate to reflect the changes.

11. The FHWA modifies figures and tables to reflect changes in the text and adds figures and tables to illustrate new or revised text.

12. In various sections of the Manual, the FHWA relocates statements or paragraphs in order to place subject material together in logical order, to provide continuity, or to improve flow. In addition, the FHWA changes the titles of some sections, figures, and tables in order to more accurately describe the content.

13. As proposed in the NPA, the FHWA removes the phrase ''reasonably safe'' throughout the Manual because it cannot be easily defined, and as a result it is open to too much subjective interpretation. The FHWA received a comment from a local DOT opposed to this revision, stating that there are some circumstances in the MUTCD where the phrase ''reasonably safe'' reflects real-world conditions, and that removing the phrase could pose a liability problem to State and local agencies in civil litigation. The FHWA disagrees because of the subjectivity of the term and for each occurrence of the term either eliminates or replaces the term with suitable language that is more appropriate.

14. The FHWA changes the references to the book previously titled ''Standard Highway Signs'' to refer to the current title, ''Standard Highway Signs and Markings.'' This reflects FHWA's change of the title of that book to more accurately reflect its content, which includes information regarding pavement markings. The FHWA received a comment from ATSSA in support of this change. The FHWA also resolves the inaccuracies between the sign illustrations in the MUTCD and the ''Standard Highway Signs and Markings'' (SHSM) book to the extent practical in the MUTCD figures.

15. The FHWA conducted a comprehensive review of all of the sign codes used throughout the Manual, and revises sign codes in several places in order to provide more consistency and clarity. As part of this process, the FHWA revises the term ''sign code'' to ''sign designation'' to avoid confusion with other uses of the word ''code.'' The FHWA received a comment from ATSSA in support of this change. A State DOT opposed sign nomenclature changes, stating that these changes could be complex for agencies that catalog sign inventory databases based on the nomenclature. The FHWA understands the issues related to inventory databases but determines that the nomenclature changes are necessary for consistency. The FHWA received a comment from ATSSA suggesting that the suffix ''w'' be used for word message signs to avoid confusion with the ''a'' suffix being used for abbreviations in the route marker series (such as M4–1a and M4–7a). The FHWA disagrees and uses the ''a'' suffix in sign designations for word message signs that are alternatives to symbol signs, as presented in the NPA. The FHWA uses the ''P'' suffix for designations for plaques to clarify that these devices must accompany a sign and cannot be used alone. ATSSA supported this change. Also, based on a comment from a citizen, the FHWA adds a column to the sign size tables in Parts 6 and 9 to cite the applicable MUTCD Section for each sign so that MUTCD users can review the pertinent information for each sign. The sign size tables for other Parts of the MUTCD already have this column.

16. Based on a comment from the NCUTCD that a single location should be provided where all definitions can be found, the FHWA places all definitions in Part 1 by relocating to Section 1A.13 all definitions that were previously contained or repeated in the MUTCD Introduction and in Parts 2 through 10 of the 2003 MUTCD and in the NPA.

17. The FHWA adds information in the MUTCD regarding toll plaza applications, because toll facilities are becoming more common and there is a need to provide more consistent use of signs, signals, and markings in advance of and at toll plazas, in order to enhance safety and convenience for road users. The FHWA adds provisions on toll plaza traffic control devices to Parts 2, 3, and 4 that reflect the results of research studies on best practices for traffic control strategies at toll plazas,[3] FHWA's policy on toll plaza traffic control devices,[4] and FHWA's report on ''Strategies for Improving Safety at Toll Collection Facilities.''[5] The NCUTCD and 10 agencies that operate toll facilities suggested that the toll road related material be placed in a new, separate Part to facilitate the use of this material. The FHWA understands that the toll operators would like to have the information consolidated into one area, but disagrees with adding a separate Part. Instead, the FHWA creates new chapters for toll plazas within Parts 2, 3, and 4 and places the new toll-related material in those chapters.

18. The FHWA expands the provisions regarding preferential lanes and adds new provisions regarding managed lanes in various parts of the MUTCD to address the increasing complexity and use of these types of lanes. Although four agencies that operate toll facilities expressed support for the need for increased uniformity in traffic control devices on managed lanes for the purposes of improving traffic safety, eight agencies (including some of those who also supported the need for including toll facilities in the MUTCD) expressed concern that the changes will place a financial burden on their agency, and two of these agencies felt that the changes were too restrictive and should reflect recommendations, rather than requirements. The FHWA understands that changes in the MUTCD are often met with financial concerns; however, the FHWA believes that the provisions for systematic upgrading

[2] Informational Memorandum, ''Update on Metric Use Requirements for FHWA Documents,'' by Jeffrey Paniati, dated November 25, 2008, can be viewed at the following Internet Web site: *http://www.fhwa.dot.gov/programadmin/contracts/1108metr.cfm.*

[3] ''State of the Practice and Recommendations on Traffic Control Strategies at Toll Plazas,'' June 2006, can be viewed at the following Internet Web site: *http://mutcd.fhwa.dot.gov/rpt/tcstoll/index.htm.*

[4] ''Toll Plaza Traffic Control Devices Policy,'' dated September 8, 2006, can be viewed at the following Internet Web site: *http://mutcd.fhwa.dot.gov/resources/policy/tcstollmemo/tcstoll_policy.htm.*

[5] ''Strategies for Improving Safety at Toll Collection Facilities,'' Report number FHWA–IF–08–005, May 2008, can be viewed at the following Internet Web site: *http://ops.fhwa.dot.gov/tolling_pricing/resources/report/toll_summary/index.htm.*

cited in Section 655.603(d)(1) of title 23, Code of Federal Regulations [6] will enable changes associated with the final rule to be accommodated without significant expense. The information on preferential and managed lanes is contained primarily in Parts 2 and 3 and is intended to address specific signing and marking issues associated with High Occupancy Toll (HOT) lanes, variable tolls and other operational strategies on managed lanes, etc. To better facilitate user understanding, the FHWA creates new chapters for preferential and managed lanes in Parts 2 and 3 and places the new and existing material on those subjects in those chapters. In addition, as proposed in the NPA, the FHWA eliminates some information regarding preferential lanes that is too specific for the MUTCD because it deals with highway planning and programmatic matters rather than the traffic control devices for preferential lanes.

19. The FHWA received comments from a variety of commenters on subject material that was not included in the NPA. In some cases those comments pertain to existing subject matter in the 2003 Edition that was not proposed for change in the NPA, while in other cases the commenters suggest new material for the MUTCD such as new signs or different traffic control device applications from those included in the 2003 Edition or the NPA. Comments received during the comment period that were outside the scope of this rulemaking are neither discussed in this preamble nor addressed in the final rule. The FHWA appreciates these comments, and might consider some of these ideas for potential future rulemaking activities.

Discussion of Amendments Within the Introduction

20. The FHWA revises paragraph 01 regarding the definition of traffic control devices to reflect that traffic control devices on private roads open to public travel are placed by authority of the private property owner or private official having jurisdiction. A State DOT commented that the existing language and that proposed in the NPA for this paragraph implied that public agencies have the authority to place traffic control devices on private roads open to public travel. The FHWA agrees that clarification is needed and revises the text accordingly.

21. In the NPA, the FHWA proposed revisions and additions to the text regarding the locations where the MUTCD applies. Two city DOTs, an NCUTCD member, three transportation professionals, a traffic control device vendor, and two citizens all supported the changes, as proposed in the NPA and as currently provided in the CFR, to apply the MUTCD to private roads open to public travel. Two State DOTs, a local DOT, and an employee of a State DOT opposed applying the MUTCD to private roads, mostly because of concerns about enforcement of the provisions. The FHWA recognizes that enforcement can only occur when a State includes the requirement to comply with MUTCD in State ordinances, local building codes, development approvals, site plans, etc., and as a result of the potential tort liability to the owners of the private roads. The FHWA believes that public agency traffic engineers are not expected to enforce this provision for existing conditions on private roads open to public travel.

Two State DOTs and two toll road operators suggested that the wording be revised to reflect that toll roads may be operated by public, quasi-public, or private entities and that toll roads are gated and restricted by tolling. The FHWA agrees and revises the language in this final rule and in 23 CFR 655.603(a),[7] to clarify that, for the purpose of applicability of the MUTCD, toll roads under the jurisdiction of public agencies or authorities or of public-private partnerships are considered to be public facilities, and that ''open to public travel'' includes private toll roads and roads within shopping centers, airports, sports arenas, and other similar business and/or recreation facilities that are privately owned, but where the public is allowed to travel without access restrictions. To address the comments from two toll road operators, this final rule language further clarifies that except for gated toll roads, roads within private gated properties where public access is restricted at all times shall not be considered to be open to public travel.

The FHWA received several comments from a major retail business operator suggesting that there are many items in the MUTCD that are not easily applicable to parking lots within shopping centers and the driving aisles within those parking lots. The FHWA agrees that, while MUTCD general principles and standard traffic control device designs should be used in parking lots, there are some MUTCD provisions that do not easily translate to conditions typically found in parking lots and parking garages. The FHWA believes that additional future consideration is needed to determine appropriate and feasible standards and guidance for the application of traffic control devices in parking lots. Therefore, the FHWA exempts parking spaces and driving aisles in parking lots, both privately and publicly owned, from MUTCD applicability in this final rule. The MUTCD continues to be applicable to ring roads, roads providing access to or egress from public roads, and circulation roads on private property open to public travel. Accordingly, throughout the MUTCD, where the term ''private property open to public travel'' was used in the NPA, the FHWA clarifies the term to be ''private road open to public travel'' and provides a precise definition of that term in Section 1A.13 in this final rule. The FHWA also incorporates these changes into 23 CFR 655.603(a).

As proposed in the NPA, the FHWA also modifies the wording of 23 CFR 655.603(a) to remove the exemption from MUTCD applicability for military bases, based on a request from the Military Surface Deployment and Distribution Command to include military bases, in order to facilitate road user safety through conformity and consistency with national standards.

22. The FHWA adds SUPPORT paragraph 05 to clarify that pictographs embedded within signs are not in themselves considered traffic control devices and thus the pictographs are not subject to the provisions in paragraph 04 that prohibit patented, copyrighted, or trademarked items. This clarification is necessary to address frequent questions from users of the MUTCD on this subject.

23. In concert with the change to show dimensions throughout the MUTCD in only English units, the FHWA revises the text in paragraphs 13 and 14 to provide a reference to new Appendix A2 for tables converting each of the English unit numerical values to the equivalent Metric values and to recommend that if metric units are to be used in laying out distances or determining sizes of devices, such units should be specified on plan drawings and made known to those responsible for designing, installing, or maintaining traffic control devices.

24. In the NPA, the FHWA proposed to revise the paragraph regarding adoption of MUTCD revisions by the States or other Federal agencies, substantial conformance of State or

[6] The Code of Federal Regulations can be viewed at the following Internet Web site: *http://www.gpoaccess.gov/CFR/.*

[7] The **Federal Register** Notice for the Final Rule, dated December 14, 2006, Vol. 71, No. 240, pages 75111–75115, can be viewed at the following Internet Web site: *http://frwebgate.access.gpo.gov/cgi-bin/getdoc.cgi?dbname=2006_register&docid=fr14de06-6.pdf.*

EXHIBIT 20 TO MDOT's MSJ

IN THE UNITED STATES PATENT AND TRADEMARK OFFICE
BEFORE THE TRADEMARK TRIAL AND APPEAL BOARD

State of Michigan

Petitioner,

Proceeding No: 92058315

v.

M22, LLC,

Registrant.

REGISTRANT'S RESPONSE TO PETITIONER'S FIRST SET OF REQUESTS FOR PRODUCTION OF DOCUMENTS AND INTERROGATORIES

Registrant states the following as its response to Petitioner's First Set of Requests for Production and Interrogatories, subject to the general and specific objections below:

PRELIMINARY STATEMENT

Pursuant to Federal Rules of Civil Procedure §§ 33 and 34, Registrant M22, LLC ("M22") hereby objects and responds to Petitioner's First Requests for Production of Documents and Interrogatories as follows:

1. Registrant's investigation into the facts and circumstances related to this action is ongoing. Registrant's responses and objections are made without prejudice to, and are not a waiver of, Registrant's right to rely on other facts or documents at trial.
2. In making the accompanying responses and objections to Petitioner's requests for production and interrogatories, Registrant does not waive, and hereby

expressly reserves, its right to assert any and all objections as to the admissibility of such responses into evidence into this action, or in any other proceedings, on any and all grounds including, but not limited to, competency, relevancy, materiality, and privilege. Registrant makes the responses and objections herein without in any way implying that it considers the requests for production or responses thereto to be relevant or material to the subject matter of this action.

3. Except for facts explicitly admitted, no admissions of any kind are implied or should be inferred from these responses. The fact that a request for production has been answered should not be taken as an admission or acceptance of the existence of any facts set forth or assumed by such request for production, or that such production constitutes admissible evidence.
4. Registrant expressly reserves the right to supplement, clarify, revise, or correct any or all of the responses and objections herein, and to assert additional objections or privileges, in one or more subsequent supplemental response(s).

GENERAL OBJECTIONS

Specific objections to each request for production are, where applicable, stated in the responses to the requests set forth below. In addition to those specific objections, M22 states the following general objections to each and every request for production and interrogatory propounded by Petitioner and set forth below.

1. Each response is subject to all appropriate objections, including but not limited to objections concerning competency, relevancy, materiality, propriety, and admissibility, which would require the exclusion of any statement contained therein if the request were asked of a witness present and testifying in court, or of

any statement contained therein, if the answer were given by the witness. All such objections and grounds are reserved and may be interposed at the time of trial.

2. Registrant objects to the entire set of requests for production and interrogatories, and each request for production and interrogatory, to the extent that the request for production or interrogatory calls for information that is protected by the attorney-client privilege, the attorney work product privilege, and/or any other applicable privilege or protection.
3. Registrant objects to the entire set of requests for production and interrogatories, and to each and every individual request for production and interrogatory contained therein, to the extent that they purport to seek information the disclosure of which would violate the constitutional, statutory, and/or common law privacy rights of third parties.
4. Defined terms used by Petitioner will have the same meaning herein.

INTERROGATORIES

Interrogatory No. 1: Describe in detail the factual basis for Your claim that the M22 Retail Mark is not identical to the M22 Sign.

Answer: Registrant incorporates into this response its General Objections above as if fully set forth herein. The M22 Retail Mark is not identical to the M22 Sign because Registrant modified the M22 Sign by rounding the corners of the white diamond located in the middle of the sign and increased the thickness of both the "M" and the "22" located in the white diamond.

Interrogatory No. 2: Describe in detail the factual basis for Your claim that the M22 Apparel Mark is not identical to the M22 Sign.

Answer: Registrant incorporates into this response its General Objections above as if fully set forth herein. The M22 Retail Mark is not identical to the M22 Sign because Registrant modified the M22 Sign by rounding the corners of the white diamond located in the middle of the sign, increased the thickness of both the "M" and the "22" located in the white diamond, and added a white border around the outside of the mark for emphasis, which contains the term "m22online.com."

Interrogatory No. 3: Detail the factual basis for Your claim that the M22 Apparel Mark is not geographically descriptive.

Answer: Registrant incorporates into this response its General Objections above as if fully set forth herein. Registrant objects because this interrogatory is vague, ambiguous, overly broad, unduly burdensome, and calls for a legal conclusion.

Interrogatory No. 4: Describe in detail the factual basis for Your claim that the M22 Apparel Mark is not geographically descriptive.

Answer: Registrant incorporates into this response its General Objections above as if fully set forth herein. Registrant objects because this interrogatory is vague, ambiguous, overly broad, unduly burdensome, and calls for a legal conclusion.

Interrogatory No. 5: Identify the names and contact information of all individuals that have expressed to You a belief, understanding or opinion that one or both of the M22 Apparel Mark or the M22 Retail Mark point solely to Respondent as the source of goods and services and not to a region in northern Michigan.

Matt Myers, Member

Respectfully submitted,

Dated: August 12, 2015

John Di Giacomo
Revision Legal, PLLC
Attorneys for Plaintiff
109 E. Front St.
Suite 309
Traverse City, MI 49684
P: (231) 714-0100
F: (231) 714-0200
john@revisionlegal.com

EXHIBIT 21 TO MDOT's MSJ

United States Patent and Trademark Office

Home | Site Index | Search | FAQ | Glossary | Guides | Contacts | eBusiness | eBiz alerts | News | Help

Trademarks > Trademark Electronic Search System (TESS)

TESS was last updated on Thu Jul 16 03:20:58 EDT 2015

TESS Home | New User | Structured | Free Form | Browse Dict | SEARCH OG | Bottom | HELP | Prev List | Curr List | Next List | First Doc | Prev Doc | Next Doc | Last Doc

Logout Please logout when you are done to release system resources allocated for you.

Start **List At:** OR Jump **to record:** **Record 2 out of 6**

TSDR | ASSIGN Status | TTAB Status ***(Use the "Back" button of the Internet Browser to return to TESS)***

Word Mark	**M22**
Goods and Services	IC 035. US 100 101 102. G & S: Retail store services featuring clothing, sporting goods, and novelty items. FIRST USE: 20071121. FIRST USE IN COMMERCE: 20071121
Mark Drawing Code	(3) DESIGN PLUS WORDS, LETTERS, AND/OR NUMBERS
Design Search Code	26.07.01 - Diamonds with plain multiple line border; Diamonds with plain single line border 26.11.21 - Rectangles that are completely or partially shaded
Serial Number	85041051
Filing Date	May 18, 2010
Current Basis	1A
Original Filing Basis	1A
Published for Opposition	April 26, 2011
Registration Number	3992159
Registration Date	July 12, 2011
Owner	(REGISTRANT) Broneah, Inc. CORPORATION MICHIGAN 125 E. Front St Traverse City MICHIGAN 49684
Assignment Recorded	ASSIGNMENT RECORDED
Attorney of Record	Brian A. Hall
	3348635;3427900

Prior Registrations	
Description of Mark	The color(s) black and white is/are claimed as a feature of the mark. The mark consists of a small, black, stylized letter "M" above a large, black number "22", within a white diamond, on a black square background.
Type of Mark	SERVICE MARK
Register	PRINCIPAL-2(F)
Live/Dead Indicator	LIVE

EXHIBIT 22 TO MDOT's MSJ

United States Patent and Trademark Office

Home | Site Index | Search | FAQ | Glossary | Guides | Contacts | eBusiness | eBiz alerts | News | Help

Trademarks > Trademark Electronic Search System (TESS)

TESS was last updated on Thu Jul 16 03:20:58 EDT 2015

TESS Home | New User | Structured | Free Form | Browse Dict | SEARCH OG | Bottom | HELP

Logout Please logout when you are done to release system resources allocated for you.

Record 1 out of 1

TSDR | ASSIGN Status | TTAB Status ***(Use the "Back" button of the Internet Browser to return to TESS)***

Word Mark	M 22 M22ONLINE.COM
Goods and Services	IC 025. US 022 039. G & S: Apparel specifically hats, t-shirts, long sleeve shirts, sweat shirts, pants, shorts, underwear, tank tops. FIRST USE: 20040101. FIRST USE IN COMMERCE: 20040101
Mark Drawing Code	(3) DESIGN PLUS WORDS, LETTERS, AND/OR NUMBERS
Design Search Code	26.07.01 - Diamonds with plain multiple line border; Diamonds with plain single line border 26.09.20 - Squares inside one another 26.09.21 - Squares that are completely or partially shaded
Trademark Search Facility Classification Code	ART-07.13 Billboards, Signs LETS-1 M A single letter, multiples of a single letter or in combination with a design NUM-26-UP 22 Other Numerals - 26 and Up SHAPES-DIAMONDS Diamond shaped designs including shaded or more than one diamond SHAPES-GEOMETRIC Geometric figures and solids including squares, rectangles, quadrilaterals and polygons
Serial Number	78963038
Filing Date	August 29, 2006
Current Basis	1A
Original Filing Basis	1A
Published for Opposition	September 18, 2007
Registration Number	3348635
Registration Date	December 4, 2007
Owner	

	(REGISTRANT) Broneah, Inc. CORPORATION MICHIGAN 125 E. Front St Traverse City MICHIGAN 49684
Assignment Recorded	ASSIGNMENT RECORDED
Attorney of Record	Enrico Schaefer
Description of Mark	Color is not claimed as a feature of the mark. The mark consists of an unmounted square street sign with a centered diamond containing M 22 and with M22online.com in the bottom border of the square.
Type of Mark	TRADEMARK
Register	PRINCIPAL
Affidavit Text	SECT 15. SECT 8 (6-YR).
Live/Dead Indicator	LIVE

EXHIBIT 23 TO MDOT's MSJ

IN THE UNITED STATES PATENT AND TRADEMARK OFFICE
BEFORE THE TRADEMARK TRIAL AND APPEAL BOARD

State of Michigan

Petitioner,

Proceeding No: 92058315

v.

M22, LLC,

Registrations: 3992159
3348635

Respondent.

PETITIONER'S RESPONSES TO RESPONDENT'S FIRST REQUESTS FOR ADMISSION

Petitioner, State of Michigan, by and through its attorneys, hereby submit the following responses and objections to Respondent M22, LLC's First Requests for Admissions:

GENERAL OBJECTIONS

The State of Michigan objects to the instructions as set forth in Respondent's First Requests for Admission, and each request, to the extent they purport to place obligations or require conduct by the State of Michigan contrary to, or in excess of, that required by the Federal Rules of Civil Procedure or the Trademark Rules of Practice, 37 C.F.R. §§ 1 *et seq.*

RESPONSES TO REQUESTS FOR ADMISSION

Request to Admit 1: Admit that the State of Michigan has never used the M22 Sign in association with the sale or offering for sale of goods or services.

Response: The State of Michigan admits it has never used the M22 sign in association with the sale or offering for sale of goods and services because the State does not sell goods or services. In further answer, the State has used and continues to use the M22 Sign since 1919 as an approved traffic control device and designation under the Manual on Uniform Traffic Control Devices to designate a highway provided and maintained as part of its state highway system.

Request to Admit 2: Admit that the State of Michigan has never displayed the M22 Sign on clothing sold by the State of Michigan.

Response: Admitted.

Request to Admit 3: Admit that the State of Michigan has never displayed the M22 Sign on a retail store.

Response: Admitted.

Request to Admit 4: Admit that the M22 Retail Mark is not identical to the M22 Sign.

Response: Denied. A comparison of the M22 Retail Mark to the M22 Sign indicates that the M22 Retail Mark is designed to be identical to the M22 Sign, using the same design with a white diamond on a black background with black lettering and the "M" and "22" in the same configuration. Further, as set forth in

the May 2, 2007 Office Action pertaining to Serial No. 85041051 (M22 Retail Mark), the Trademark Examining Attorney stated:

> Attached evidence shows that "M22" refers to a highway in Michigan. This attached evidence shows that applicant's usage of the mark in a design consisting of a white diamond on a black square with the "M" in black above the "22" is exactly the way the Michigan Department of Transportation uses "M22" in its road signs for this highway.

In its Response to the Office Action, Respondent did not dispute the Examiner's findings.

Regarding Serial No. 79863038 (M22 Apparel Mark), the same white diamond on a black square with the "M" in black above the "22" in exactly the way the Michigan Department of Transportation uses "M22" in its road signs for this highway appears, with "the very tiny wording M22online.com at the bottom" as described by the Trademark Examining Attorney in the January 26, 2007 Office Action.

Request to Admit 5: Admit that the M22 Apparel Mark is not identical to the M22 Sign.

Response: Admitted in part and denied in part. Admitted to the extent that M22ONLINE.COM, in virtually imperceptible lettering, surrounded by a black border, is part of the M22 Apparel Mark. Denied for the reasons set forth in Response to Request to Admit 4.

Request to Admit 6: Admit that the State of Michigan has never used the M22 Mark except as a traffic control device.

Response: Denied for the reason that the M22 Sign is used on the state road map as well as to designate portions of the state's Great Lake Circle Tour and the Scenic Heritage Drive Route. In addition, the M22 Sign is used to market and promote northwest Michigan.

Request to Admit 7: Admit that the State of Michigan has never enforced the intellectual property statements contained within the Manual of Uniform Traffic Control Devices against any third party other than Registrant.

Response: The State objects to this Request as vague and ambiguous in its reference to "intellectual property statements." To the extent that Respondent's Request to Admit 7 is directed to the State's enforcement of the provision in the Manual prohibiting trademark protection for traffic control devices, the Request is denied for the reason that the State has notified applicants of the Manual's prohibition on trademark protection for traffic control devices.

Request to Admit 8: Admit that Attorney General Bill Schuette was previously an attorney at the law firm of Warner, Norcross, and Judd.

Response: Admitted.

Request to Admit 9: Admit that Attorney General Bill Schuette appointed James Scott, an attorney at Warner, Norcross, and Judd, as a special attorney general to file this cancellation proceeding.

Response: Admitted.

Request to Admit 10: Admit that You have no evidence supporting your allegation that "Registrant stopped use of the mark in the M22 Online Registration in association with the goods identified in the M22 Online Registration with no intent to resume such use" as alleged in Paragraph 30 of Your Second Amended Petition to Cancel.

Response: Denied for the reason that (i) although Respondent alleged first use back to January 1, 2004, WHOIS records show that M22online.com was not registered until August 8, 2006; (ii) products appearing on a January 26, 2007 version of Respondent's website are shown without the "M22ONLINE.COM" lettering below the M22 Sign.

Request to Admit 11: Admit that You have no evidence supporting your allegation that "The fame or reputation of Petitioner is such that, when the M-22 Sign is used with Registrant's goods or services, a connection with Petitioner is presumed" as alleged in Paragraph 43 of Your Second Amended Petition to Cancel.

Response: Denied. That a connection with Petitioner is presumed is demonstrated, in part, by postings via social media confirming consumers'

understanding that the M-22 Sign used with Registrant's goods and services refers to northwest Michigan. In further answer, theft of the M22 Sign along the M22 state highway route have increased dramatically since Respondent began selling products incorporating the M22 Sign as its brand. Also, see Responses to Request Nos. 12 and 15.

Request to Admit 12: Admit that You have no evidence supporting your allegation that "consumers purchase goods decorated with the M-22 Sign, because the M-22 Sign points to Petitioner as the source" as alleged in Paragraph 55 of Your Second Amended Petition to Cancel.

Response: Denied for the reasons stated in the State's Responses to Request Nos. 11 and 15. In further response, theft of the M22 Sign along the M22 state highway route have increased dramatically since Respondent began selling products incorporating the M22 Sign as its brand.

Request to Admit 13: Admit that the State of Michigan has never used the M22 Sign as its flag or coat of arms.

Response: Admitted. In further answer, the State of Michigan states that the M22 sign is alternatively an "insignia" of the State of Michigan.

Request to Admit 14: Admit that the State of Michigan has never used the M22 Sign as the seal of a department.

Response: Admitted.

Request to Admit 15: Admit that You have no evidence supporting your allegation that "Registrant knew, or at least had no reasonable basis for believing otherwise, that its use of the M-22 Sign would create a likelihood of confusion as to the source of the associated goods and services" as alleged in Paragraph 62 of Your Second Amended Petition to Cancel.

Response: Denied because Respondent adopted the M22 Sign to "express a common passion for Northern Michigan" that Respondent and third parties have expressed for the area and the M22 state highway route as evidenced by its recognition and designation by the Michigan Legislature as a Scenic Heritage Route, its inclusion in the Great Lakes Circle Tour, and use of the sign in marketing and promoting northern Michigan. In further answer, see Responses to Request Nos. 11 and 12.

Request to Admit 16: Admit that You have no evidence supporting your allegation that "Registrant was not using the mark M22 M22ONLINE.COM on all the goods identified in the application Serial No. 78963038 when it filed the application, and upon information and belief, is not currently using the mark on all the goods identified in the application" as alleged in Paragraph 66 of Your Second Amended Petition to Cancel.

Response: Denied because, *inter alia*, products available for purchase on a January 26, 2007 version of the M22ONLINE.COM website, as well as later versions, do not include the lettering M22ONLINE.COM as shown in the M22 Apparel Mark, and the products available for purchase as of January 26, 2007 do not include underwear, long sleeve shirts, pants or shorts.

Request to Admit 17: Admit that the State of Michigan has never used the M22 Sign to indicate the origin or source of its goods or services.

Response: Denied for the reason that M22 Sign is used as an approved traffic control device under the Manual UTCD to designate a highway provided and maintained as part of Michigan's state highway system. Further, the M22 Sign is used on the state road map and to designate portions of the State's Great Lake Circle Tour. Further, M22 was designated as a Scenic Heritage Route in 2001 and has been used to promote and market northwest Michigan.

Request to Admit 18: Admit that the State of Michigan does not provide color tours.

Response: Admitted.

Request to Admit 19: Admit that the State of Michigan does not provide real estate services under the M22 Sign.

Response: Admitted.

Respectfully submitted,

As to objections:

By: _____ Date: August 17, 2015

BILL SCHUETTE, Attorney General
Toni L. Harris (P63111)
Assistant Attorney General/Transportation Division
Van Wagoner Building
425 W. Ottawa, 4th Floor
Lansing, MI 48913
Tel: 517-373-1470
Fax: 517-335-6586

As to responses to Requests for Admissions:

_____

Brad Wieferich, P.E.
MDOT Design Division

PROOF OF SERVICE

I, Susan Lubitz, legal secretary to Assistant Attorney General Toni L. Harris, certify that on August 17, 2015, I served a true and correct copy of Petitioner's Responses to Respondent's First Requests for Admissions on Respondent's counsel of record by mail and first-class postage fully prepaid thereon and causing same to be deposited in the United States mail service.

Susan Lubitz

Susan Lubitz

EXHIBIT 24 TO MDOT's MSJ

IN THE UNITED STATES PATENT AND TRADEMARK OFFICE
BEFORE THE TRADEMARK TRIAL AND APPEAL BOARD

State of Michigan

Petitioner,

Proceeding No: 92058315

v.

M22, LLC,

Registrations: 3992159
3348635

Respondent.

PETITIONER'S RESPONSES TO RESPONDENT'S FIRST SET OF INTERROGATORIES AND REQUESTS FOR PRODUCTION OF DOCUMENTS

Petitioner, State of Michigan, by and through its attorneys, hereby submit the following responses and objections to Respondent M22, LLC's First Set of Interrogatories and Requests for Production of Documents:

PRELIMINARY STATEMENT

The State of Michigan's investigation into the facts pertaining to this case is ongoing, and the State will supplement responses as required under the applicable rules. Where the State responds that responsive documents will be produced shall not be an admission that responsive documents exist or that the documents produced are relevant or admissible.

GENERAL OBJECTIONS

The State of Michigan objects to the instructions as set forth in Respondent's First Set of Interrogatories and Requests for Production of Documents, and each request, to the extent they purport to place obligations or require conduct by the State of Michigan contrary to, or in excess of, that required by the Federal Rules of Civil Procedure or the Trademark Rules of Practice, 37 C.F.R. §§ 1 *et seq.*

RESPONSES TO INTERROGATORIES

Interrogatory No. 1: State the factual basis for Your claim that the M22 Marks are identical to the M22 Sign.

Response: The State of Michigan objects to Interrogatory No. 1 on grounds that it is overbroad and unduly burdensome, seeks information that is irrelevant, immaterial, and not likely to lead to the discovery of admissible evidence, seeks information that is in the possession, custody or control of Respondent and third parties, and seeks to invade the attorney-client privilege and work product doctrine. The State further objects to this request on grounds that it is compound and includes subparts that constitute separate interrogatories. Subject to and without waiving its objections, as set forth in the May 2, 2007 Office Action pertaining to Serial No. 85041051, the Trademark Examining Attorney stated:

> Attached evidence shows that "M22" refers to a highway in Michigan. This attached evidence shows that applicant's usage of the mark in a design consisting of a white diamond on a black square with the "M" in black above the "22" is exactly the way the Michigan Department of Transportation uses "M22" in its road signs for this highway.

In its Response to the Office Action, Respondent did not dispute the Examiner's findings.

Regarding Serial No. 79863038, the same white diamond on a black square with the "M" in black above the "22" in exactly the way the Michigan Department of Transportation uses "M22" in its road signs for this highway appears, with "the very tiny wording M22online.com at the bottom" as described by the Trademark Examining Attorney in the January 26, 2007 Office Action.

In further response, to the reasonable observer, the M22 Retail Mark is identical in all material respects to the M22 Sign. Further, to the reasonable observer, the M22 Sign portion of the M22 Apparel Mark is identical to the M22 Sign in all material respects.

Interrogatory No. 2: State the factual basis for Your claim that the State of Michigan will suffer harm from Registrant's registration of the M22 Marks.

Response: The State of Michigan objects to Interrogatory No. 2 on grounds that it is overbroad and unduly burdensome, and seeks to invade the attorney-client privilege and work product doctrine. The State further objects to this request on grounds that it is compound and includes subparts that constitute separate interrogatories. Subject to and without waiving its objections, the State of Michigan is harmed when state and federal laws are violated and when individuals and entities lawfully conducting business in Michigan are impacted as a result. Further, the State of Michigan is harmed because theft of the M22 Sign along the

M22 state highway route have increased dramatically since Respondent began selling products incorporating the M22 Sign as its brand.

Interrogatory No. 3: Identify all goods sold by the State of Michigan bearing the M22 Sign.

Response: The State of Michigan does not sell goods. In further answer, the State has used and continues to use the M22 Sign since 1919 as an approved traffic control device and designation under the Manual on Uniform Traffic Control Devices to designate a highway provided and maintained as part of its state highway system. In further answer, the M22 state highway route has been recognized and designated by the Michigan Legislature as a Scenic Heritage Route, included in the Great Lakes Circle Tour, and the M22 Sign has been used in marketing and promoting northern Michigan.

Interrogatory No. 4: Identify all uses of the M22 Sign in association with the State of Michigan's provision, offering for sale, or sale of services.

Response: The State of Michigan objects to Interrogatory No. 4 on grounds that it seeks information that is overly broad and unduly burdensome, irrelevant, immaterial, and not likely to lead to the discovery of admissible evidence. Subject to and without waiving its objections, the State of Michigan does not sell or offer to sell services. In further answer, see Response to Interrogatory No. 3.

Interrogatory No. 5: Identify all individuals interviewed or otherwise identified by the State of Michigan who have been confused into believing that the goods or services of Registrant originate from the State of Michigan.

Response: The State of Michigan objects to Interrogatory No. 5 to the extent it is seeks to invade the attorney-client privilege and work product doctrine. Subject to and without waiving its objections, the State of Michigan is in the process of investigating and gathering information responsive to this Interrogatory and will supplement its response in accordance with the applicable rules.

Interrogatory No. 6: State the factual basis for Your claim that Registrant was not using the M22 Apparel Mark in association with all of the goods listed in its application for the M22 Apparel Mark at the time the application was filed.

Response: The State of Michigan objects to Interrogatory No. 6 on grounds that it is overbroad and unduly burdensome, seeks information that is in the possession, custody or control of Respondent and third parties, and seeks to invade the attorney-client privilege and work product doctrine. Subject to and without waiving its objections, products available for purchase on a January 26, 2007 version of the M22ONLINE.COM website, as well as later versions, do not include the lettering M22ONLINE.COM as shown in the M22 Apparel Mark, and the products available for purchase as of January 26, 2007 do not include underwear, long sleeve shirts, pants or shorts.

Interrogatory No. 7: Identify the manner in which the State of Michigan has used the M22 Sign as an insignia of the State of Michigan.

Response: The State has used and continues to use the M22 Sign since 1919 as an approved traffic control device and designation under the Manual on Uniform Traffic Control Devices to designate a highway provided and maintained as part of its state highway system. In further answer, the M22 state highway route has been recognized and designated by the Michigan Legislature as a Scenic Heritage Route, included in the Great Lakes Circle Tour, and the M22 Sign has been used in marketing and promoting northern Michigan.

Interrogatory No. 8: State the factual basis for Your allegation that "consumers purchase goods decorated with the M-22 Sign, because the M-22 Sign points to Petitioner as the source," which is contained in Paragraph 55 of Your Second Amended Petition to Cancel.

Response: The State of Michigan objects to Interrogatory No. 8 on grounds that it is overbroad and unduly burdensome, seeks information that is in the possession, custody or control of Respondent and third parties, and seeks to invade the attorney-client privilege and work product doctrine. Subject to and without waiving its objections, see Response to Interrogatory No. 7. In further answer, Respondent adopted the M22 Sign to "express a common passion for Northern Michigan" that Respondent and third parties have expressed for the area and the

M22 state highway route as evidenced by its recognition and designation by the Michigan Legislature as a Scenic Heritage Route, its inclusion in the Great Lakes Circle Tour, and the State's use of the sign in designating the M22 state trunkline route and in marketing and promoting northern Michigan. Furthermore, postings via social media confirm that consumers understand the M-22 Sign used with Registrant's goods and services refers to northwest Michigan. In addition, the State has used the M22 Sign for several decades and theft of the M22 Sign along the M22 state highway route have increased dramatically since Respondent began selling products incorporating the M22 Sign as its brand.

Interrogatory No. 9: Identify the manner in which the State of Michigan has obtained goodwill in the M22 Sign.

Response: The State of Michigan objects to Interrogatory No. 9 on grounds that it is vague, ambiguous, overbroad and unduly burdensome. Subject to and without waiving its objections, see Responses to Interrogatory Nos. 7 and 8.

Interrogatory No. 10: State the facts underlying the State of Michigan's search for a Special Assistant Attorney General for this matter, including all law firms considered and all individuals interviewed for the position.

Response: The State of Michigan objects to Interrogatory No. 10 on grounds that it is vague, ambiguous, overbroad, unduly burdensome, and seeks information that is irrelevant to this proceeding and is intended solely to harass and annoy the

State of Michigan. The State further objects to this request on grounds that it seeks to invade the attorney-client privilege and work product, is compound and includes subparts that constitute separate interrogatories.

RESPONES TO REQUESTS FOR PRODUCTION OF DOCUMENTS

Request for Production No. 1: Produce all Documents and other Communications referred to or related to Your responses to Registrant's First Interrogatories.

Response: The State of Michigan objects to Request for Production No. 1 on grounds that it is overbroad and unduly burdensome, seeks information that is irrelevant, immaterial, and not likely to lead to the discovery of admissible evidence, and seeks to invade the attorney-client privilege and work product doctrine. Subject to and without waiving its objections, non-objectionable and responsive documents will be produced.

Request for Production No. 2: Produce all Documents and Communications concerning Your use of the M22 Sign.

Response: The State of Michigan objects to Request for Production No. 2 on grounds that it is overbroad and unduly burdensome, seeks information that is irrelevant, immaterial, and not likely to lead to the discovery of admissible evidence, and seeks to invade the attorney-client privilege and work product

doctrine. Subject to and without waiving its objections, non-objectionable and responsive documents will be produced.

Request for Production No. 3: Produce all Documents and Communications concerning Your adoption of the Uniform Manual of Traffic Control Devices.

Response: The State of Michigan objects to Request for Production No. 3 on grounds that it is overbroad and unduly burdensome, seeks information that is publicly available, irrelevant, immaterial, and not likely to lead to the discovery of admissible evidence, and seeks to invade the attorney-client privilege and work product doctrine. Subject to and without waiving its objections, non-objectionable and responsive documents will be produced.

Request for Production No. 4: Produce all Documents and Communications that You have received concerning the M22 Marks.

Response: The State of Michigan objects to Request for Production No. 4 on grounds that it is overbroad and unduly burdensome, seeks information that is irrelevant, immaterial, and not likely to lead to the discovery of admissible evidence, and seeks to invade the attorney-client privilege and work product doctrine. Subject to and without waiving its objections, non-objectionable and responsive documents will be produced.

Request for Production No. 5: Produce all Documents and Communications that You have received or created concerning this Trademark Trial and Appeal Board proceeding.

Response: The State of Michigan objects to Request for Production No. 5 on grounds that it is overbroad and unduly burdensome, seeks information that is publicly available, irrelevant, immaterial, and not likely to lead to the discovery of admissible evidence, and seeks to invade the attorney-client privilege and work product doctrine. Subject to and without waiving its objections, non-objectionable and responsive documents will be produced.

Request for Production No. 6: Produce all Documents and Communications supporting Your allegations in Your Second Amended Petition to Cancel.

Response: The State of Michigan objects to Request for Production No. 1 on grounds that it is overbroad and unduly burdensome, seeks information in the possession, custody or control of Respondent or third parties, and seeks to invade the attorney-client privilege and work product doctrine. Subject to and without waiving its objections, non-objectionable and responsive documents will be produced.

Request for Production No. 7: Produce all Documents and Communications supporting Your allegation that Registrant has abandoned the M22 Marks.

Response: The State of Michigan objects to Request for Production No. 7 on grounds that it is duplicative, overbroad and unduly burdensome, seeks information in the possession, custody or control of Respondent and non-parties, and seeks to invade the attorney-client privilege and work product doctrine. Subject to and without waiving its objections, non-objectionable and responsive documents will be produced.

Request for Production No. 8: Produce all Documents and Communications supporting Your allegation that consumers associate Registrant's goods with You.

Response: The State of Michigan objects to Request for Production No. 8 on grounds that it is duplicative, overbroad and unduly burdensome, seeks information in the possession, custody or control of Respondent and non-parties, and seeks to invade the attorney-client privilege and work product doctrine. Subject to and without waiving its objections, non-objectionable and responsive documents will be produced.

Request for Production No. 9: Produce all Documents and Communications supporting Your allegation that You have been harmed by Registrant's registration of the M22 Marks.

Response: The State of Michigan objects to Request for Production No. 9 on grounds that it is duplicative, overbroad and unduly burdensome, seeks information in the possession, custody or control of Respondent and non-parties, and seeks to

invade the attorney-client privilege and work product doctrine. Subject to and without waiving its objections, non-objectionable and responsive documents will be produced.

Request for Production No. 10: Produce all Documents and Communications supporting Your allegation that consumers believe that Registrant's goods or services originate from You.

Response: The State of Michigan objects to Request for Production No. 10 on grounds that it is duplicative, overbroad and unduly burdensome, seeks information in the possession, custody or control of Respondent and non-parties, and seeks to invade the attorney-client privilege and work product doctrine. Subject to and without waiving its objections, non-objectionable and responsive documents will be produced.

Request for Production No. 11: Produce all Documents and Communications supporting Your allegation that Registrant has misrepresented the source of its goods or services.

Response: The State of Michigan objects to Request for Production No. 11 on grounds that it is duplicative, overbroad and unduly burdensome, seeks information in the possession, custody or control of Respondent and non-parties, and seeks to invade the attorney-client privilege and work product doctrine.

Subject to and without waiving its objections, non-objectionable and responsive documents will be produced.

Request for Production No. 12: Produce all Documents and Communications supporting Your allegation that You have used the M22 Sign as an insignia.

Response: The State of Michigan objects to Request for Production No. 12 on grounds that it is duplicative, overbroad and unduly burdensome, seeks information in the possession, custody or control of Respondent and non-parties, and seeks to invade the attorney-client privilege and work product doctrine. Subject to and without waiving its objections, non-objectionable and responsive documents will be produced.

Request for Production No. 13: Produce all Documents and Communications supporting Your allegation that the M22 Marks were obtained fraudulently.

Response: The State of Michigan objects to Request for Production No. 13 on grounds that it is duplicative, overbroad and unduly burdensome, seeks information in the possession, custody or control of Respondent and non-parties, and seeks to invade the attorney-client privilege and work product doctrine. Subject to and without waiving its objections, non-objectionable and responsive documents will be produced.

Request for Production No. 14: Produce all Documents and Communications concerning Your allegation that consumers have been confused into believing that Registrant's goods or services originate from You.

Response: The State of Michigan objects to Request for Production No. 14 on grounds that it is duplicative, overbroad and unduly burdensome, seeks information in the possession, custody or control of Respondent and non-parties, and seeks to invade the attorney-client privilege and work product doctrine. Subject to and without waiving its objections, non-objectionable and responsive documents will be produced.

Request for Production No. 15: Produce all Documents and Communications concerning Your allegation that the M22 Sign represents a region.

Response: The State of Michigan objects to Request for Production No. 15 on grounds that it is duplicative, overbroad and unduly burdensome, seeks information in the possession, custody or control of Respondent and non-parties, and seeks to invade the attorney-client privilege and work product doctrine. Subject to and without waiving its objections, non-objectionable and responsive documents will be produced.

Respectfully submitted,

As to objections:

By: _____ Date: August 17, 2015

BILL SCHUETTE, Attorney General
Toni L. Harris (P63111)
Assistant Attorney General/Transportation Division
Van Wagoner Building
425 W. Ottawa, 4th Floor
Lansing, MI 48913
Tel: 517-373-1470
Fax: 517-335-6586

As to responses to Interrogatories:

State of Michigan)
SS.
County of Ingham)

The undersigned hereby affirms that the foregoing responses to Respondent's First Set of Interrogatories are true and complete to the best of his knowledge, information and belief.

_____
Brad Wieferich, P.E.
MDOT Design Division

Subscribed and sworn to before me on this
17th day of August, 2015.

Susan Lubitz
Notary Public
Ingham County, Michigan
My commission expires: May 25, 2017

SUSAN LUBITZ
NOTARY PUBLIC, STATE OF MI
COUNTY OF IONIA
MY COMMISSION EXPIRES May 25, 2017
ACTING IN COUNTY OF Ingham

PROOF OF SERVICE

I, Susan Lubitz, legal secretary to Assistant Attorney General Toni L. Harris, certify that on August 17, 2015, I served a true and correct copy of Petitioner's Responses to Respondent's First Set of Interrogatories and Requests for Production of Documents on Respondent's counsel of record by mail and first-class postage fully prepaid thereon and causing same to be deposited in the United States mail service.

Susan Lubitz

Susan Lubitz

EXHIBIT 25 TO MDOT's MSJ

Graham, Debby (MDOT)

From:	Felt, Bob (MDOT)
Sent:	Monday, September 26, 2011 1:04 PM
To:	'psullivan@northernexpress.com'
Cc:	Felt, Bob (MDOT)
Subject:	info re:case of the missing M-22 signs

Hi Pat,

Over the past two years in Leelanau and Benzie counties, we've replaced more than 30 signs along M-22 at a cost of more than $6,000.
Unfortunately, we've had to replace other signs like "Stop Ahead" as well.

Anti-theft hardware is used when we install the replacement signs. However, one of our signs was cut off at the post.

To save taxpayers money, we are considering installing fewer M-22 route markers next year.

For obvious reasons, community members should contact local law enforcement officials with any information about the missing signs or if they see any suspicious activity.

-Bob Felt, Office of Communications
MDOT

EXHIBIT 26 TO MDOT's MSJ

Great Lakes Circle Tours

The Great Lakes Circle Tours are a total of four routes circling each Great Lake, with the exception of Lake Ontario. The State of Michigan has signed each of the circle tours for the Great Lakes the state touches: the Lake Erie, Lake Huron, Lake Michigan, and Lake Superior Circle Tours. These tours were originally conceived as an aid for travellers who wished to stick close to the shorelines of the lakes in their journeys. The Lake Superior Circle Tour was the first route established in 1986, with Michigan (1987) following along with Huron and Erie in the early 1990s.

The links below lead to specific information and precise routings for each of the Circle Tours:

Lake Erie Circle Tour

With the shortest length of any of the Great Lakes Circle Tours in Michigan, the Lake Erie Circle Tour runs through only two counties in Southeast Michigan. The LECT enters from Ohio and departs for Ontario only fifty miles later.

Lake Huron Circle Tour

From Port Huron to Sault Ste Marie, the Lake Huron Circle Tour enters both of Michigan's peninsulas and crosses the Mackinac Bridge. This Circle Tour is the only one of the four which only enters two jurisdictions—Michigan and Ontario.

Lake Michigan Circle Tour

The Lake Michigan Circle Tour enters both peninsulas and crosses the Mackinac Bridge, like its cousin the LHCT. However, the LMCT is also the longest of the the Circle Tour routes within Michigan and is also the only one which, in its entire distance, does not leave the US.

Lake Superior Circle Tour

The first official Great Lake Circle Tour, the Lake Superior Circle Tour has roots which stretch back decades when tourism associations in Michigan, Wisconsin, Minnesota and Ontario promoted the route.

Additional Information

- NEW! **Great Lakes Circle Tour** - new website from the author of MichiganHighways.org.
- **Great Lakes Circle Tour** - information from the Great Lakes Commission. It was the GLC who originally helped establishe the Great Lakes Circle Tours and continues to provide information on many aspects of the Great Lakes region.
- **Great Lakes Circle Tour** - from the Great Lakes Information Network (GLIN), which "is a partnership that provides one place online for people to find information relating to the binational Great Lakes-St. Lawrence region of North America."
- NEW! **Great Lakes Circle Tours** - from the Pure Michigan website.
- UPDATED! **History of the Lake Michigan Circle Tour** - from the West Michigan Tourist Association (WMTA). The WMTA helped to coordinate the first of the Great Lakes Circle Tours in the 1980s.
- UPDATED! **The 6,500-mile Great Lakes Circle Tour** (via archive.org)- an overview article from The Fishwrapper.

Copyright © 1997-2015 Christopher J. Bessert. All Rights Reserved. | chris.bessert@gmail.com | Last updated Friday, March 6, 2015.

MDOT000262

EXHIBIT 27 TO MDOT's MSJ

PURE MICHIGAN®

Pure Michigan Blog

Michigan's Official Travel and Tourism Blog

A Love Note to Leelanau

Posted on **July 5, 2011** by **Pure Michigan**

Dearest Leelanau County,

Since our first summer with you in 1980, we haven't been able to get you off of our minds. We knew we loved you from the moment we **drove up M-22** and saw your bright red cherries poking through trees in the orchards, as clear blue skies and cotton ball clouds danced above.

Taking the M-22 Drive

Not even distance has been able to keep us apart. Although we moved to Pennsylvania nearly 20 years ago, we defy conventional east coast summers spent "down the shore" and instead, head "up north" to see you, despite the blank stares we get when we talk about your cottages, **Manitous**, and **Petoskey stones** to those who do not understand what it means to love you.

4th of July Parade in Leland

That's because to love you is to be a part of a secret- a secret held only by those of us who have been blessed to sneak away from it all and spend even just a week of our summers with you.

Your birch-lined beaches and potluck dinners on picnic tables captivate us. And days spent with you, bobbing through the brisk waters of **Lake Michigan** in giant, black inner-tubes keep us coming back for more.

Fingers stained from your cherries and strawberries picked up at roadside stands leave a sweet reminder of you. And we cherish the treasures you leave for us in the form of rocks and "**Leland Blue**" on your shores.

Sunset over the Manitous

Your sunsets bring us all together for a final evening show, as we sit recalling memories of years spent with you- 4th of July parades marched in, Pyramid Point trails hiked, white fish dinners grilled, Sunfish boat trips sailed, Blue Angels spotted.

Leelanau, thank you for being a part of our history, and for allowing us to be a little piece of yours.

With Love,

The Taylor Family
Martha and Doug Taylor, Newtown,PA

MDOT000406

Happy Fouth of July at Jolli Lodge on Lake Michigan

Erin Taylor, Washington D.C.
Katheryn Taylor, Washington D.C.

← Have a (Safe) 4th of July Weekend

My Mackinac Island Fairytale Wedding →

7 Comments State of Michigan Travel Blog 1 Login

Recommend Share Sort by Best

Join the discussion…

Jan Shafer-Bunting • 4 years ago
i enjoyed reading all of the above as I feel the same way about my beautiful birth state of Michigan. I have lived in many states since 1977, but the few times I have been back have made me wish that everyone could see what an awesome state Michigan is. Can anything in this world beat standing on a bluff, hearing the waves and seeing the incredible blue-green water below?? Or watching a brilliantly colored sun set over the Lake?? I could go on and on...
• Reply • Share ›

peggy harris • 4 years ago
I spent most of my childhood summer vacations in an A-Frame cottage between Leelanau and Northport. The cottage was located directly on Lake Michigan and it was absolutely "Beautiful. We would go to Leland and get smoked chubs at the shack by the damn, then throw the heads in the water for the fish to eat. Those sure were the good days and I would give anything to be able to spend time like I did as a kid. Wonderful Memories indeed!
• Reply • Share ›

Annette • 4 years ago
Taylor Family...I grew-up every summer coming for vacation on Green Lk.
in Interlochen so we know the area well...as Tammy expressed above, it pulls at the chord in my heart. My whole family, grandparents, aunts, uncles and cousins enjoyed many memories there yearly, we would rent 2-3 cottages and enjoy a couple wks. together. As we married, we to have passed this to our own children and now having a grandson, hope to have some of those times back in the same area. There's not a place I would rather be or go, not getting to go there this summer which is breaking my heart, but will somehow in the yrs. to come. The fun of going out in the lake jumping off a boat and swimming, fishing, hearing the music from the camp, nights laying outside on the dock to see the stars, hearing the loons and campfires fill my heart with memories and a bit of sadness since my parents passed away last yr. and they so loved it. I loved it so that I worked 3 yrs. at the Music Camp in college and still keep in touch with a friend from there. So, to all of you that know how this feels, thank you...my life wouldn't be much without the wonderful memories I shared in the Grand Traverse area of Michigan. It made me a better person to appreciate beauty, serenity and be closer to God for the few wks. a year I had in that beautiful area.
• Reply • Share ›

Marty • 4 years ago
I may have been born in Baltimore, however grew up outside of Detroit. Michigan will always be home to me. I miss it so and maybe one day, I will move back.
• Reply • Share ›

Scott Snow • 4 years ago
We were just there this past week! I cant imagine moving away from Michigan because I would also miss this area more then anything, and I feel for those who have moved. Most people who have never been to this area would have no idea the lasting impressions of the small towns, lakes, and sand dune lined, aqua blue water beaches. Once you visit...your hooked for life. I believe the beauty of this area... and many more areas of Michigan, can equal or surpass any place in the country

MDOT000407

Search Blog

Follow Pure

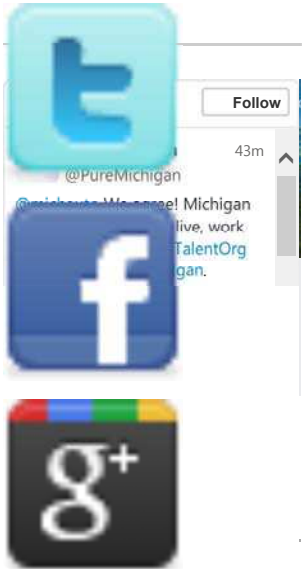

Free Travel Updates

Get Our Latest Blog Posts Sent Directly to Your Email Inbox!

Email Address*

First Name

MDOT000409

Last Name

* Required

Subscribe

Most Popular Stories

10 Fun Facts About Michigan International Speedway

16 55 people 55

Topics

Monthly Events Roundup

Outdoors

Michigan Food

Places to Stay

Posts By Region

Events

Pure Michigan Commercials

Recent Stories

Five Spectacular Instagram Photos from Our Fans in July 2015

10 Fun Facts About Michigan International Speedway

Six Reasons to Run the Mighty Mac in September

Six Things You Didn't Know about Hydroplane Racing in Detroit

Walking With Nature: Destination Traverse City

MDOT000410

Watch Our Commercials

View our YouTube Channel

Latest Flickr Photos

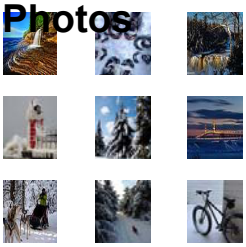

View our Flickr Photostream

Most Commented Posts

Sharing History: Summer at Fort Mackinac 142

The History Behind Michigan's Hexagon House 124

Five Spectacular Michigan Destinations Nominated for 8th Wonder of the World 78

A Blast of Fun at the 2013 Motown Winter Blast 64

You're Invited: Live Web Chat with "Haunted Travels of Michigan" Authors 58

Instagram

MDOT000411

Featured Bloggers

Awesome Mitten (30)

Jesse Land(23)

Archives

Select Month

MDOT000412

EXHIBIT 28 TO MDOT's MSJ

PURE MICHIGAN®

Pure Michigan Blog

Michigan's Official Travel and Tourism Blog

3 Scenic Pure Michigan Hiking Trails Near M-22

Posted on **October 28, 2013** by **Pure Michigan**

Today, guest blogger Scott Christ describes his experience hiking along three scenic trails near M-22. For more information on hiking trails in Michigan, visit michigan.org.

Close your eyes and imagine an idyllic place filled with vibrant, turquoise-hued lakes … powdered sand beaches surrounded by towering dunes … and pine-scented, old-growth forests.

For some people, Michigan may not be the first place to come to mind that fits this description. Yet that's exactly what I experienced during a summer trip to the **Leelanau Peninsula** in northern Michigan.

Scoping Out the Hiking Trails Along M-22 Near Leland and Glen Arbor

Our destination for this trip: Lake Leelanau. Our goal: plan as many "Michigan-themed" activities as possible. I had driven up M-22 before, but after spending a week trekking up and down this infamous road, I was absolutely blown away by it's winding roads, spectacular views, and overall magnificence.

Before leaving for our trip, I did my homework and found three hiking trails close to M-22 between **Leland** and **Glen Arbor**:

1. Houdek Dunes Natural Area
2. Whaleback Natural Area
3. Pierce Stocking Scenic Drive

Here's what each had to offer.

Experiencing the Trails

Whaleback Natural Area

Whaleback Natural Area is a 10,000-year-old playground of preserved dunes and forests. It's within walking distance of downtown Leland and directly accessible from M-22. Plan on 1 to 1.5 hours if you're walking the trail. There are a couple fairly intense climbs involved too, so I'd classify this one as "Moderately Difficult."

MDOT000420

Make sure you stop at the spectacular Lookout Point, which offers majestic views of Lake Michigan.

Houdek Dunes Natural Area

Quick disclaimer about Houdek Dunes: it's not easy to find. A Google Maps search took us to downtown Leland and we quickly realized we were in the wrong spot. So we headed up M-22 just north of Lake Leelanau, and found it marked by a tiny sign on the left side of the road.

The troubles getting there turned out to be worth it though. Houdek Dunes was formed from glacial sediments about 4,000 years ago, and you'll experience the amazing aftermath of geology and time with its combination of dunes and wooded forests.

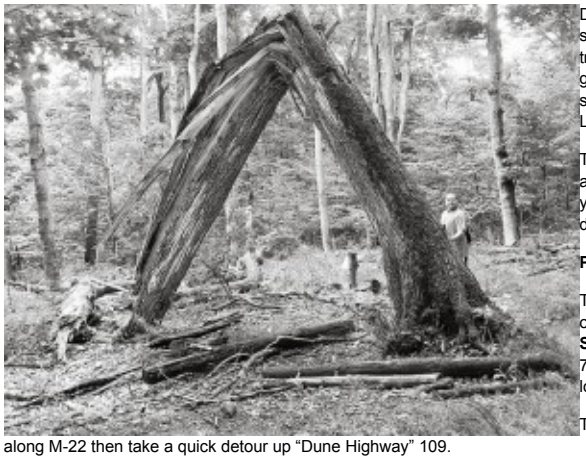

Depending on which way you trek through the trail system, you'll see plenty of hundred-year-old birch trees, mature pines, sun-kissed stretches of dense green ferns, and the beautiful Houdek Creek, a spring-fed trout stream that flows into North Lake Leelanau.

The trail features 3/4 and 1- 1/2 mile loops. Plan on a couple hours to get through it if you're walking, but you can definitely do it in less. I'd classify the difficulty level as "moderate."

Pierce Stocking Scenic Drive

The Pierce Stocking Scenic Drive turned out to be one of the coolest parts of our trip. Located in the **Sleeping Bear Dunes National Lakeshore**, it's a 7-mile drive that offers a variety of stops and lookout points.

To get there, you'll need to head over to Glen Arbor along M-22 then take a quick detour up "Dune Highway" 109.

About halfway through the drive, you'll reach the Lake Michigan Dune Overlook Platform stop. Park your car and walk the trail to the dune, which towers 450 feet above lake level.

Although going down the bluff is not recommended, it's also not prohibited for those who are up to the challenge. The way down is a little unnerving at first because it's steep, but once you get used to it it's smooth sailing. The way up is another story. I consider myself to be in good shape and it was strenuous. But if you're in decent shape, like a little adventure, and don't have a fear of heights, do it. You won't regret it.

There is an entrance fee of $10 per vehicle, which gets you access to all areas of **Sleeping Bear Dunes National Lakeshore.** It's well worth the money and I was happy to help support these awesome parks.

Final Thoughts

As someone who comes from the ad world, my feelings about "Pure Michigan" were that it was just a clever ad campaign. But this trip changed that. Pure Michigan embodies the fact that Michigan, and particularly northern Michigan, is one of the most beautiful, unspoiled places in the world. Let's keep it that way.

Where is your favorite spot to go hiking in Michigan?

Scott Christ is a writer, entrepreneur, and health enthusiast who helps people look better, feel better, and live longer with healthy real food recipes and motivational weight loss tips. Connect with Scott on Facebook or Twitter.

MDOT000421

← From Our Community: Fall Colors in Pure Michigan

1,000+ Miles in Pure Michigan →

MDOT000422

Search Blog

Follow Pure

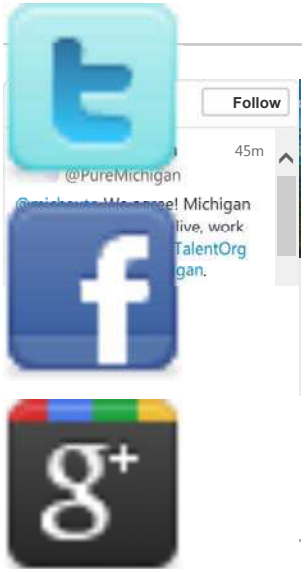

Free Travel Updates

Get Our Latest Blog Posts Sent Directly to Your Email Inbox!

Email Address*

First Name

MDOT000423

Last Name

* Required

Subscribe

Most Popular Stories

10 Fun Facts About Michigan International Speedway

16 55 people 55

Topics

Monthly Events Roundup

Outdoors

Michigan Food

Places to Stay

Posts By Region

Events

Pure Michigan Commercials

Recent Stories

Five Spectacular Instagram Photos from Our Fans in July 2015

10 Fun Facts About Michigan International Speedway

Six Reasons to Run the Mighty Mac in September

Six Things You Didn't Know about Hydroplane Racing in Detroit

Walking With Nature: Destination Traverse City

Watch Our Commercials

View our YouTube Channel

MDOT000424

Latest Flickr Photos

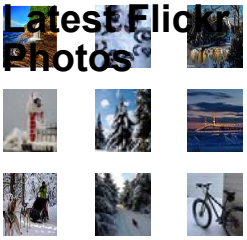

View our Flickr Photostream

Most Commented Posts

Sharing History: Summer at Fort Mackinac 142

The History Behind Michigan's Hexagon House 124

Five Spectacular Michigan Destinations Nominated for 8th Wonder of the World 78

A Blast of Fun at the 2013 Motown Winter Blast 64

You're Invited: Live Web Chat with "Haunted Travels of Michigan" Authors 58

Instagram

Featured Bloggers

Awesome Mitten (30)

MDOT000425

Jesse Land(23)

Archives

Select Month

MDOT000426

EXHIBIT 29 TO MDOT's MSJ

TRAVERSE legal
ATTORNEYS & ADVISORS
Suite 6-28
Traverse City
Michigan 49684
231-992-0636 Fax
trave@legal.com

August 9, 2010

North Coast Image Wear
C/O Tracy Piehl
610 West Sheridan, Suite 2
Petoskey, MI 49770
Phone: (231) 347-3016
Fax: (231) 348-2015
tracy@ncimagewear.com

RE: Infringement of M22 Trademark

Dear Ms. Piehl:

It has recently come to our attention that you are printing several products for The M119 Project, which distributes products containing a mark that infringes upon our client's registered M22 family of marks. This letter serves as your notice that any continued printing of products containing the M119 mark will subject you to significant liability for contributory trademark infringement and vicarious liability under federal law.

Our client is the holder of registered trademarks for M22 in a variety of International Classes and for use in association with several different goods or services. Specifically, our client holds a registered trademark for M22 for use in association with wine (Registration No. 3427900) and M22 for use in association with apparel, specifically, hats, t-shirts, long sleeve shirts, sweat shirts, pants, shorts, underwear, and tank tops (Registration No. 3348635). Our client also has two applications currently pending registration in front of the US Patent and Trademark Office for M22 for use in association with retail shops featuring clothing, sporting goods, and novelty items (Serial Nos. 85040494 and 85041051), as well as an application for M22 Challenge for use in association with entertainment in the nature of competitions in the field of athletics (Serial No. 85089688). Evidence of these trademarks are attached to this letter as Exhibit A. Our client also holds common law rights in the M22 family of marks by virtue of its longstanding use of those marks in commerce.

Consequently, our client's M22 mark has become well and favorably known across the world as an indicator of quality goods and services.

Understand that the test for trademark infringement applied by a court asks whether the opposing party's mark is "likely to cause confusion, or to cause mistake, or to deceive." 15 U.S.C. § 1114. In examining whether a mark is likely to cause confusion, courts apply eight non-exclusive factors: (1) the strength of the plaintiff's mark; (2) the relatedness of the goods; (3) the similarities of the marks; (4) evidence of actual confusion; (5) the marketing channels used; (6) the likely degree of purchaser care; (7) the defendant's intent in selecting the mark; and (8) the likelihood of expansion of the product lines. *See Frisch's Restaurants, Inc. v. Elby's Big Boy, Inc.* 670 F.2d 642, 648 (6th Cir. 1982). When the likelihood of confusion test "is closely balanced, the question should be resolved in favor of the senior user." *See* 3 McCarthy § 23:64; *see also Dallas Cowboys Football Club, Ltd. v. Am.'s Team Props.*, 616 F. Supp. 2d 622, 637 (N.D. Tex. 2009).

We have no doubt that a court would find that the M119 Project's use of the M119 mark is confusingly similar to our client's M22 mark. Specifically, the M119 Project is currently using an identical logo, save for a change in the number displayed on the logo from 22 to 119, to sell goods in direct competition with our client's goods. This has subjected them to up to $2,000,000 in statutory damages under the Lanham Act. 15 U.S.C. § 1117(c)(2). Further, the M119 Project can also be held liable for our client's actual costs, damages, and attorneys fees under 15 U.S.C. § 1117(a).

Also note that your printing of products for the M119 Project has subjected you to liability for the same amount, up to $2,000,000 in statutory damages, for your contributory and vicarious infringement. Contributory infringement occurs where a third party either (a) induces a third party to infringe on a mark or (b) supplies a product to a third party with actual or constructive knowledge that the product is being used to infringe upon a mark. *See Inwood Lab, Inc. v. Ives Lab., Inc.*, 456 U.S. 844, 853-54 (1982). Similarly, vicarious liability for trademark infringement occurs where a party (1) has the ability to stop or limit the direct infringement of a mark; (2) directly profits from the direct infringement of another's mark; and (3) declines to exercise the right to stop or limit the infringement. *See Bridgeport Music, Inc. v. Rhyme Syndicate Music*, 376 F.3d 615, 621 (6th Cir. 2004). It is clear that, should you decide to continue printing these products, you will be subjected to liability for both contributory and vicarious trademark infringement.

I hope that the explanation of the law contained within this letter resolves any questions that you may have as to our client's trademark rights and that you will cease printing the M119 products without the need for further legal action. With that said, our client must reserve all rights, including the right to bring a trademark infringement lawsuit for

contributory infringement should you continue printing these items. If you have any questions, please do not hesitate to contact me directly at 231-932-0411.

Sincerely,

John Di Giacomo
john@traverselegal.com

Exhibit A

United States Patent and Trademark Office

Trademarks > Trademark Electronic Search System (TESS)

TESS was last updated on Fri Aug 6 04:05:46 EDT 2010

M22

Word Mark	M22
Goods and Services	IC 033. US 047 049. G & S: Wine. FIRST USE: 20071000. FIRST USE IN COMMERCE: 20071000
Standard Characters Claimed	
Mark Drawing Code	(4) STANDARD CHARACTER MARK
Trademark Search Facility Classification Code	LETS-1 M A single letter, multiples of a single letter or in combination with a design NUM-22 The number 22 or the word Twenty-two
Serial Number	77197208
Filing Date	June 4, 2007
Current Filing Basis	1A
Original Filing Basis	1B
Published for Opposition	November 27, 2007
Registration	

Registration Number	3427900
Registration Date	May 13, 2008
Owner	(REGISTRANT) Broneah, Inc. CORPORATION MICHIGAN 121 E. Front St. Suite 103 Traverse City MICHIGAN 49684
Attorney of Record	Enrico Schaefer
Type of Mark	TRADEMARK
Register	PRINCIPAL
Live/Dead Indicator	LIVE

TESS Home | New User | Structured | Free Form | Browse Dict | SEARCH OG | Top | HELP | PREV LIST | CURR LIST | NEXT LIST | FIRST DOC | PREV DOC | NEXT DOC | LAST DOC

| HOME | SITE INDEX| SEARCH | eBUSINESS | HELP | PRIVACY POLICY

United States Patent and Trademark Office

Trademarks > Trademark Electronic Search System (TESS)

TESS was last updated on Fri Aug 6 04:05:46 EDT 2010

Logout Please logout when you are done to release system resources allocated for you.

Record 1 out of 1

 (Use the "Back" button of the Internet Browser to return to TESS)

Word Mark	M 22 M22ONLINE.COM
Goods and Services	IC 025. US 022 039. G & S: Apparel specifically hats, t-shirts, long sleeve shirts, sweat shirts, pants, shorts, underwear, tank tops. FIRST USE: 20040101. FIRST USE IN COMMERCE: 20040101
Mark Drawing Code	(3) DESIGN PLUS WORDS, LETTERS, AND/OR NUMBERS
Design Search Code	26.07.01 - Diamonds with plain multiple line border; Diamonds with plain single line border 26.09.20 - Squares inside one another 26.09.21 - Squares that are completely or partially shaded
Trademark Search Facility Classification Code	ART-07.13 Billboards, Signs LETS-1 M A single letter, multiples of a single letter or in combination with a design NUM-26-UP 22 Other Numerals - 26 and Up SHAPES-DIAMONDS Diamond shaped designs including shaded or more than one diamond SHAPES-GEOMETRIC Geometric figures and solids including squares, rectangles, quadrilaterals and polygons
Serial Number	78963038
Filing Date	August 29, 2006
Current Filing Basis	1A
Original Filing Basis	1A
Published for Opposition	September 18, 2007
Registration Number	3348635

Registration Date	December 4, 2007
Owner	(REGISTRANT) Broneah, Inc. CORPORATION MICHIGAN 121 E. Front St. Suite 103 Traverse City MICHIGAN 49684
Attorney of Record	Enrico Schaefer
Description of Mark	Color is not claimed as a feature of the mark. The mark consists of an unmounted square street sign with a centered diamond containing M 22 and with M22online.com in the bottom border of the square.
Type of Mark	TRADEMARK
Register	PRINCIPAL
Live/Dead Indicator	LIVE

United States Patent and Trademark Office

Trademarks > Trademark Electronic Search System (TESS)

TESS was last updated on Fri Aug 6 04:05:46 EDT 2010

Logout Please logout when you are done to release system resources allocated for you.

Start List At: OR Jump to record: **Record 2 out of 4**

M22

Word Mark	M22
Goods and Services	IC 035. US 100 101 102. G & S: Retail shops featuring clothing, sporting goods, and novelty items. FIRST USE: 20071121. FIRST USE IN COMMERCE: 20071121
Standard Characters Claimed	
Mark Drawing Code	(4) STANDARD CHARACTER MARK
Serial Number	85040494
Filing Date	May 17, 2010
Current Filing Basis	1A
Original Filing Basis	1A
Owner	(APPLICANT) Broneah, Inc. CORPORATION MICHIGAN 121 E. Front St. Suite 103 Traverse City MICHIGAN 49684
Attorney of Record	Brian A. Hall
Type of Mark	SERVICE MARK
Register	PRINCIPAL
Live/Dead	

Live/Dead Indicator LIVE

United States Patent and Trademark Office

Trademarks > Trademark Electronic Search System (TESS)

TESS was last updated on Fri Aug 6 04:05:46 EDT 2010

Logout Please logout when you are done to release system resources allocated for you.

Start List At: OR Jump to record: **Record 1 out of 4**

 (Use the "Back" button of the Internet Browser to return to TESS)

Word Mark	M22
Goods and Services	IC 035. US 100 101 102. G & S: Retail store services featuring clothing, sporting goods, and novelty items. FIRST USE: 20071121. FIRST USE IN COMMERCE: 20071121
Mark Drawing Code	(3) DESIGN PLUS WORDS, LETTERS, AND/OR NUMBERS
Design Search Code	26.07.01 - Diamonds with plain multiple line border; Diamonds with plain single line border 26.11.21 - Rectangles that are completely or partially shaded
Serial Number	85041051
Filing Date	May 18, 2010
Current Filing Basis	1A
Original Filing Basis	1A
Owner	(APPLICANT) Broneah, Inc. CORPORATION MICHIGAN 121 E. Front St. Suite 103 Traverse City MICHIGAN 49684
Attorney of	

Attorney of Record	Brian A. Hall
Description of Mark	The color(s) black and white is/are claimed as a feature of the mark. The mark consists of a small, black, stylized letter M above a large, black number 22, within a white square, on a black background.
Type of Mark	SERVICE MARK
Register	PRINCIPAL
Live/Dead Indicator	LIVE

United States Patent and Trademark Office

Home | Site Index | Search | FAQ | Glossary | Guides | Contacts | eBusiness | eBiz alerts | News | Help

Trademarks > Trademark Electronic Search System (TESS)

TESS was last updated on Fri Aug 6 04:05:46 EDT 2010

TESS Home | New User | Structured | Free Form | Browse Dict | SEARCH OG | Logout | Help | Prev List | Curr List | Next List | First Doc | Prev Doc | Next Doc | Last Doc

Logout Please logout when you are done to release system resources allocated for you.

Start List At: OR Jump to record: **Record 1 out of 10**

TARR Status | ASSIGN Status | TDR | TTAB Status *(Use the "Back" button of the Internet Browser to return to TESS)*

Word Mark	THE M-22 CHALLENGE
Goods and Services	IC 041. US 100 101 107. G & S: Entertainment in the nature of competitions in the field of athletics. FIRST USE: 20090201. FIRST USE IN COMMERCE: 20090201
Mark Drawing Code	(3) DESIGN PLUS WORDS, LETTERS, AND/OR NUMBERS
Design Search Code	02.01.02 - Men depicted as shadows or silhouettes of men; Silhouettes of men 02.07.01 - Groups, males 02.09.05 - Humans, including men, women and children, depicted running; Running, humans 02.09.19 - Diving, humans; Humans, including men, women and children, depicted playing games or engaged in other sports; Playing games or sports, humans 18.03.01 - Bicycles; Tricycles; Unicycles 18.07.01 - Boats, inflatable; Canoes; Kayaks; Row boats 18.11.07 - Boat paddles; Canoe paddles; Oars; Paddles, canoe
Serial Number	85089688
Filing Date	July 21, 2010
Current Filing Basis	1A
Original	

Filing Basis	1A
Owner	(APPLICANT) Broneah, Inc. CORPORATION MICHIGAN Suite 103 121 E. Front St. Traverse City MICHIGAN 49684
Attorney of Record	Brian A. Hall
Description of Mark	Color is not claimed as a feature of the mark. The mark consists of silhouettes of three individuals along with the words "the M-22 challenge". One individual is biking, one is canoeing, one is running. The running individual's legs make up the two l's in the word "challenge", and the same individual bears a stylized M22 mark on the chest; a white diamond containing "M22" on a black background.
Type of Mark	SERVICE MARK
Register	PRINCIPAL
Live/Dead Indicator	LIVE

000032

MDOT000032