ESTTA Tracking number: **ESTTA433138**

Filing date: **09/29/2011**

IN THE UNITED STATES PATENT AND TRADEMARK OFFICE
BEFORE THE TRADEMARK TRIAL AND APPEAL BOARD

Proceeding	92052197
Party	Defendant Supercar Collectibles Limited
Correspondence Address	ROBERT D BUYAN STOUT UXA BUYAN & MULLINS LLP 4 VENTURE , STE 300 IRVINE, CA 92618 UNITED STATES rbuyan@patlawyers.com
Submission	Testimony For Defendant
Filer's Name	Robert D. Buyan
Filer's e-mail	rbuyan@patlawyers.com
Signature	/Robert D. Buyan/
Date	09/29/2011
Attachments	PetitionerExhibits37-42-Dahlberg.pdf (21 pages)(2417056 bytes)

Terri Yenko Gould, Executor v. Supercar Collectables Ltd., et al.
Cancellation Proceeding No. 92052197

Petitioner's Exhibit No. 37

Super Car Collectibles

Home :: Ford (your choices) :: Cobras/Shelby Daytonas :: 1965 Cobra Shelby - Black/Yellow

1965 Cobra Shelby - Black/Yellow

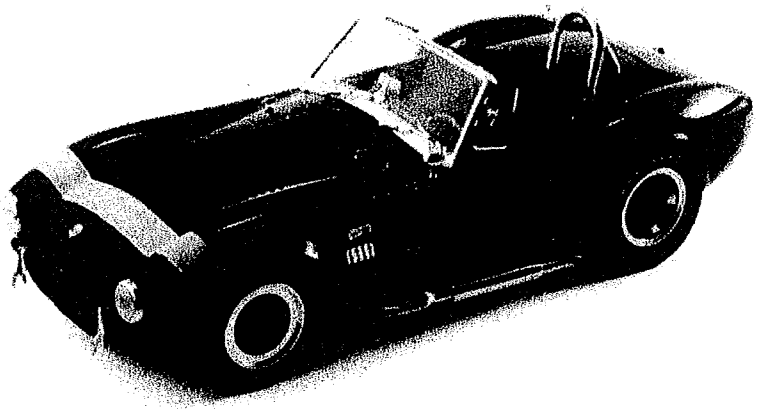

Price: $54.95

- Model: DC42709
- **In Stock**

Quantity: 1

Add to C

#DC42709 - The **Terlingua Racing Team 1965 Shelby Cobra in Black** with the Yellow stripe race day paint, with the mag wheels, an opening hood, opening doors, opening trunk, steerable front wheels, and a good amount of detail. Made by Shelby Collectibles. We found a little better deal on this recently so ordered more some in. These are here in stock & ready to ship to you now.

P37

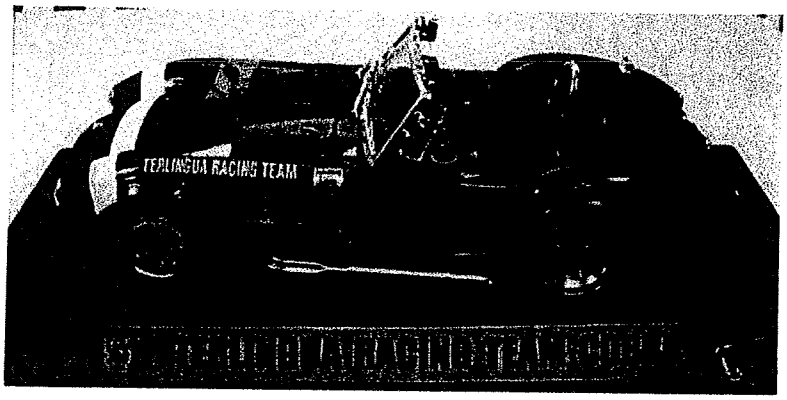
TERLINGUA RACING TEAM

Terri Yenko Gould, Executor v. Supercar Collectables Ltd., et al.
Cancellation Proceeding No. 92052197

Petitioner's Exhibit No. 38

Super Car Collectibles

1968 Mustang "Bullitt" movie car (Located One)

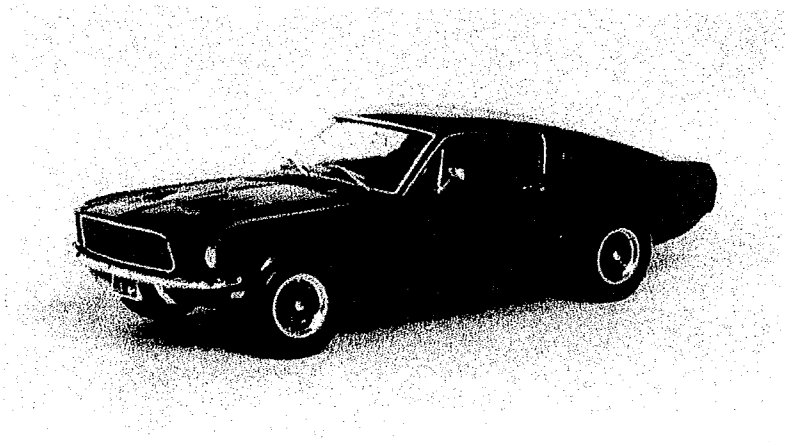

Price: $149.95

- Model: 33118
- **In Stock**

Quantity: 1

Add to C

#33118 - is a very much wanted **Dark Green 1968 Mustang GT Fastback**, as the ***BULLIT MOVIE*** car. It comes in special movie theme packaging, and features a black interior, the mag wheels, opening hood, opening doors, and has steerable front wheels. Made by RC2/Ertl in 2002, these are now a harder to find car in this special packaging (PHOTO of PACKAGING HERE). We have not had any of these in quite some time, but Supercar Collectibles recently purchased a selection of older & harder to find 1:18 cars. **On this car we only received one of the cars. There are 4 of these currently on ebay as high as $179-199**. It's priced much better here, and it's ready to ship to you now. Box is real decent too.

P38

Terri Yenko Gould, Executor v. Supercar Collectables Ltd., et al.
Cancellation Proceeding No. 92052197

Petitioner's Exhibit No. 39

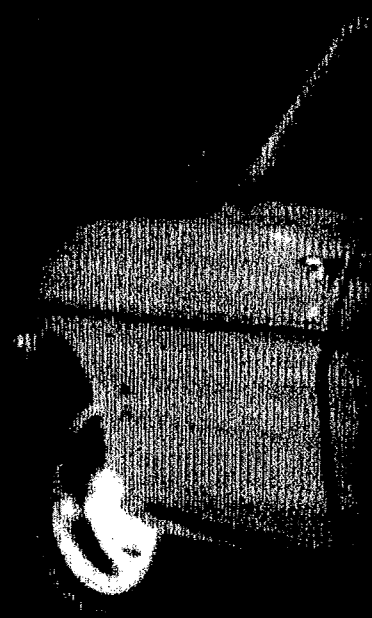

1969 CHEVROLET YENKO CAMARO

PRODUCED BY SUPERCAR COLLECTIBLES

Story by Patrick Finn

Late in the 1960s Ford, Chrysler and General Motors – The Big Three – were locked in a battle for supremacy in the muscle car market and, with big-block V8 as weapons, waged a battle of horsepower one-upmanship.

One of Chevrolet's contenders was a Camaro with a 396ci engine. This, in the minds of Chevrolet dealers and the car-buying public, meant the Camaro was at a disadvantage compared to the Mustang (429ci) or the various Chrysler products with 440ci engines. Some Chevrolet dealers took matters into their own hands and this is where Don Yenko came in.

Yenko was a racing driver and Chevrolet dealer from Canonsburg, Pennsylvania. He had been modifying Chevrolets for some time and was already well known for his Super Corvair. In 1967 he began taking delivery of engineless Camaros from the Chevrolet plant, fitting them with a 427ci crate engine at his workshop and selling them to his end-other [illegible] The continued throughout 1969 and [illegible] 118 "Yenko" Camaros were sold.

For 1969, Yenko negotiated with Chevrolet to produce Camaros under the Central Office Production Order system. This was a special internal order system that had been previously utilized to produce special request orders from [illegible] performance fleet buyers. While the cars were on the production line, they were fitted with the L72-427 V8, the option [illegible] Hurst four-speed gearbox or a dual-gate automatic, Z28 suspension, 4.10:1 Posi-traction rear end and a Cowl induction hood. The 1969 Yenko Chevrolet Camaro was the result of this arrangement and the subject of the 1:18 scale diecast car offered by Supercar Collectibles.

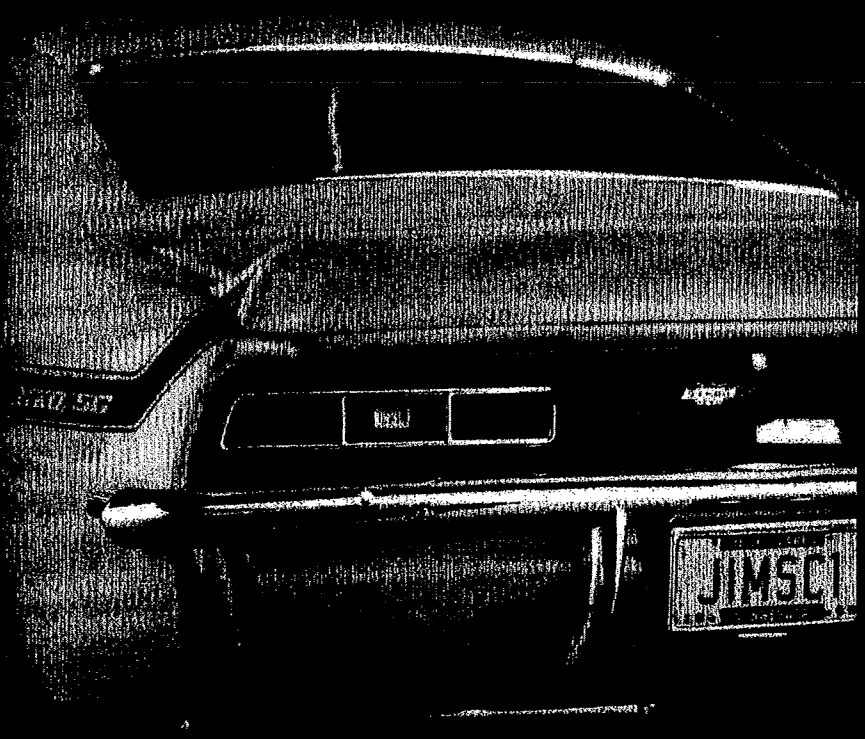

[illegible] white-lettered Goodyear [illegible] read GT tires, the Camaro has a [illegible] ka muscle car status. [illegible] and squat on replica 15" Chevy [illegible] wheels, as were originally ordered [illegible] and they are well-modeled [illegible] with air valves.

Supercar Collectibles has captured the [illegible] of the body styling of the Camaro [illegible] 1:18 version. The fit and finish of [illegible] model bodywork is of a good quality [illegible] Daytona Yellow paintwork [illegible] of Nemishes. The Yenko Super [illegible] stripes and external badging are [illegible] and correct in their detail. The [illegible] Camaro badges on the [illegible] and fenders are highlight as [illegible] are particularly well-defined and easy [illegible]. Without letting it detract from the [illegible] otherwise high level of overall [illegible] the placement of a couple [illegible] badges is off. This is only a minor [illegible] and is more than likely due to the [illegible] The Diecast Magazine reviewed a [illegible] production sample.

When the hood is opened, you will [illegible] the small supporting springs on [illegible] hinges, a nice touch of authenticity [illegible] this was correct in most GM products of the era. The engine is where all the action is and the 427ci big block is well presented with its orange block, chrome tappet covers and large black air filter. Other detail under the hood includes the alternator plumbing, wiring, horn, brake master cylinder and the hood insulation pad. The under-hood area is well decaled and even the battery has a decal attached.

The exterior of the trunk is adorned with a huge spoiler which fits in well with the whole muscle car image. On the trunk floor sits a space-saver spare tire with what appears to be a compressor attached, a nice touch. The inside of the trunk lid is fitted with decals for the wheel changing instructions and a warning label printed in red ink that is actually legible.

Everyone knows real muscle cars have all-black interiors and the Yenko Camaro replica is no different. Its triple-black trim hides a lot of the internal detail but you should look more closely, as it is worth the reward. Opening the coupe's doors reveals front bucket seats fitted with lap seatbelts and both seats tip forward for access to the rear seats. The bases of the front seats also slide forwards and backwards.

1:18
DIE CAST

NOT FOUND IN CHAIN STORES

Sox & Martin - HERE NOW!

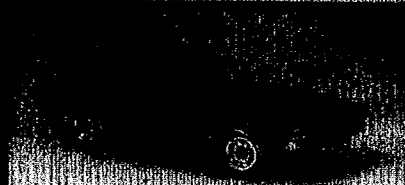

ORG '71 R/T - also Purple '70 T/A

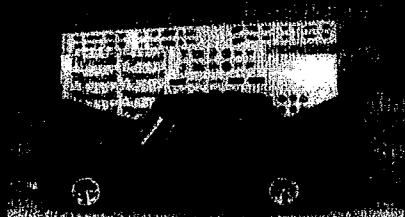

Primer '65 Plymouth [illegible] $74.95

LIMITED EDITION For [illegible] made

$74.95

Extreme Detail '69 Yenko Camaro's

Different emblem placement - Douglas decal

Ed Hedrick's Camaro & others too!

www.Supercar1.com

Dealer inquiries also welcomed

KIT2826

'69 Camaro® Yenko/SC

427 Coupe

Catching both the automotive industry and the American motoring public by surprise, Ford released the new Mustang in April, 1964 to unprecedented success. Its smaller, two door profile along with its long hood/short rear deck design made a lasting impression on everyone who saw it.

Stunned by the sales numbers the Mustang was racking up, it took until 1967 for General Motors to bring its competitors to market. Chevrolet® unveiled the new '67 Camaro® in the fall of 1966. Among the available options was the "SS"™ package that included the new 350 cubic inch engine. In a classic example of corporate competition, Ford offered its 390 engine in the Mustang for '67 which of course spurred Chevy® to release its 396 big block V8 as a mid-year Camaro option.

The 396 Camaros burned up the drag strips across the country, but fans also knew that Chevy had an even larger 427 cubic inch V8 in its arsenal. When initial requests for the factory to install the 427 into the Camaro were turned down, enterprising Chevrolet dealers started ordering the engines by themselves and swapped the big motors in. Don Yenko was one such dealer. Owning a large Chevy dealership in Pennsylvania, Yenko used his connections within the GM management to convince Chevy in 1969 to write what was known as a "COPO" order, which stood for Corporate Office Production Order. These were used for special combinations of options that were not generally available.

Don Yenko grabbed up 201 of the special 427 powered '69 Camaros for his dealership. All of the Yenko cars came equipped with the 450 horsepower version of the iron block 427, high-rise intake with Holley 4 barrel carb, power disc brakes, the ZL2 cowl induction hood, positraction rear end with 4.10 gear and the customer's choice of a 4 speed manual transmission or GM's M40 Turbo-Hydramatic automatic transmission which in this case came with Hurst's dual-gate linkage. Yenko's staff added the horizontal body stripes and headrest graphics after the cars arrived at his dealership. Today, original Yenkos are among the most sought after Camaros ever built

*** REPEAT SEVERAL TIMES**
** A REPETER PLUSIEURS FOIS*

*** OPTIONAL PARTS**
** PIÈCES EN OPTION*

*** DECAL**
** DECAL COMANIE*

*** ALTERNATIVE ASSEMBLY**
** ENSEMBLAGE ALTERNATIVE*

*** CEMENT TOGETHER**
** A COLLER*

*** REMOVE AND THROW AWAY**
** A RETIRER ET JETER*

*** DO NOT CEMENT**
** NE PAS COLLER*

READ THIS BEFORE YOU BEGIN

- Study the assembly drawings.
- Each plastic part is identified by a number.
- In the assembly drawings, some parts will be marked by a star (★) to indicate chrome plated plastic.
- For better paint and decal adhesion, wash the plastic parts in a mild detergent solution. Rinse and let air dry.
- Check the fit of each piece before cementing in place.
- Use only cement for polystyrene plastic.
- Scrape plating and paint from areas to be cemented.
- Allow paint to dry thoroughly before handling parts.
- Any unused parts may be discarded.

DECAL APPLICATION INSTRUCTIONS

1. Cut desired decal from sheet.
2. Dip decal in water for a few seconds.
3. Place wet decal on paper towel.
4. Wait until decal is movable on paper backing.
5. Place decal in position on model, face up and slide backing away.
6. Press out air bubbles with a soft damp cloth.
7. Milkiness that may appear is for better decal adhesion and will dry clear. Wipe away any excess adhesive.
8. Do not touch decal until fully dry.
9. Allow the decals 48 hours to dry before applying clear coat.

NOTE: Decals are compatible with setting solutions or solvents.

LIRE CE QUI SUIT AVANT DE COMMENCER

- Etudier les schémas de montage.
- Chaque pièce en plastique est identifiée par un numéro.
- Sur les schémas de montage, certaines pièces sont marquées d'une étoile (★) pour indiquer qu'elles sont en plastique chromé.
- Pour une meilleure prise de la peinture et des autocollants, laver les pièces en plastique avec une solution détergente peu concentrée. Les rincer et les laisser sécher à l'air.
- Vérifier que chaque pièce s'ajuste bien avant de la coller en place.
- N'utiliser que de la colle pour polystyrène.
- Gratter les parties à coller pour enlever le chrome et la peinture.
- Laisser la peinture bien sécher avant de manipuler les pièces.
- Toute pièce inutilisée peut être jetée.

DIRECTIVES D'APPLICATION DES AUTOCOLLANTS

1. Découper l'autocollant désiré de la feuille.
2. Tremper l'autocollant dans de l'eau pendant quelques secondes.
3. Placer l'autocollant mouillé sur une serviette en papier.
4. Attendez que l'autocollant puisse être déplacé sur son support en papier.
5. Mettre l'autocollant en position sur le modèle face sur le dessus et faire glisser le support pour l'enlever.
6. Appuyer avec un chiffon doux humide pour éliminer les bulles d'air.
7. La substance laiteuse qui peut apparaître est destinée à améliorer l'adhésion de l'autocollant et devient incolore au séchage. Essuyer pour enlever tout excédent d'adhésif.
8. Ne pas toucher l'autocollant tant qu'il n'est pas bien sec.
9. Laisser l'autocollant sécher pendant 48 heures avant d'appliquer une couche transparente.

REMARQUE: Les autocollants sont compatibles avec les solutions de fixage ou les solvants.

This optional paint guide is provided if you choose to detail paint your model.

Aluminium	*Aluminum*
Gloss Black	*Noir brilliant*
Gloss Red	*Rouge brilliant*
Gloss Yellow	*Jaune brilliant*
Semigloss Black	*Noir satiné*
Silver	*Argent*
Steel	*Acier*
Turn Signal Amber	*Clignotant ambre*
White	*Blanc*

If you have any questions or comments, call our hotline at: (800) 833-3570
or, please write to:

Revell-Monogram Consumer Service Department, 725 Landwehr Road, Northbrook, Illinois 60062

Be sure to include the plan number (85282600200), part number, description, your return address and phone number.

Visit our website: www.revell-monogram.com

REVELL-MONOGRAM, LLC Northbrook, IL. Copyright © 2003. All rights reserved.

P40

1 FRONT SUSPENSION ASSEMBLY

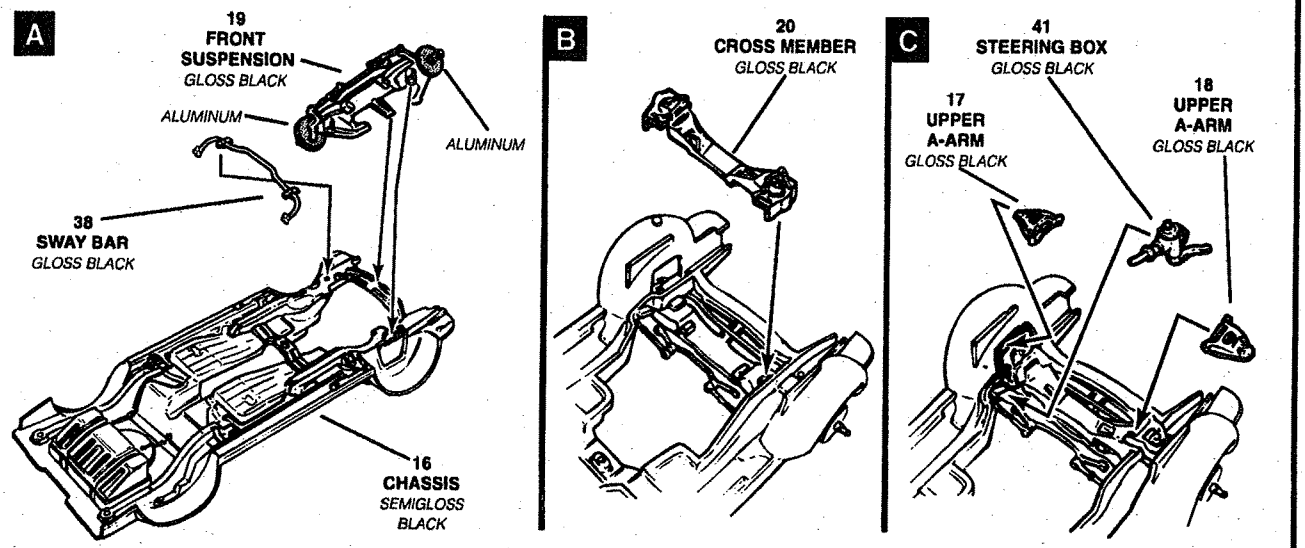

2 ENGINE ASSEMBLY

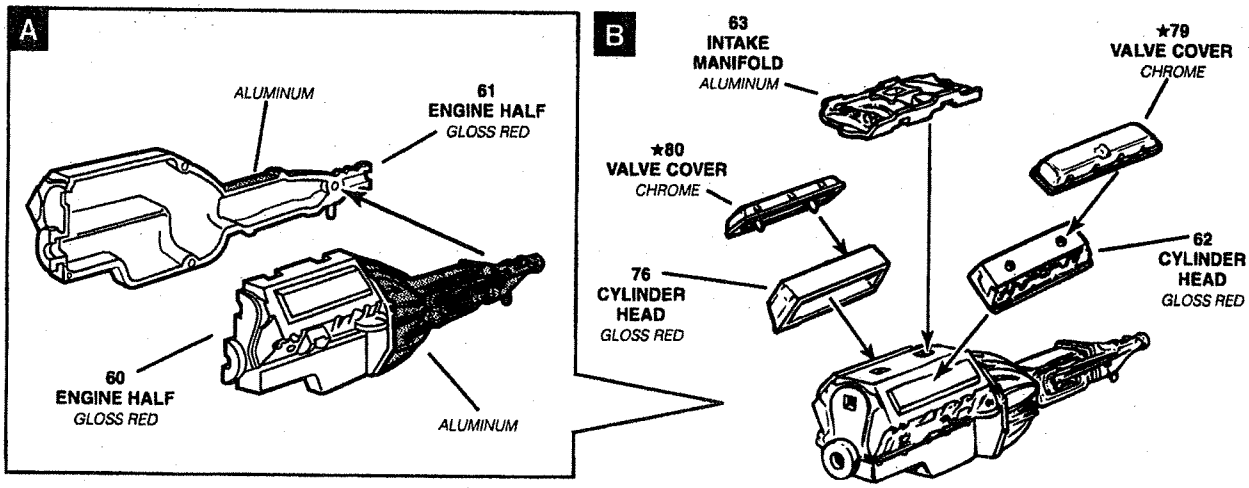

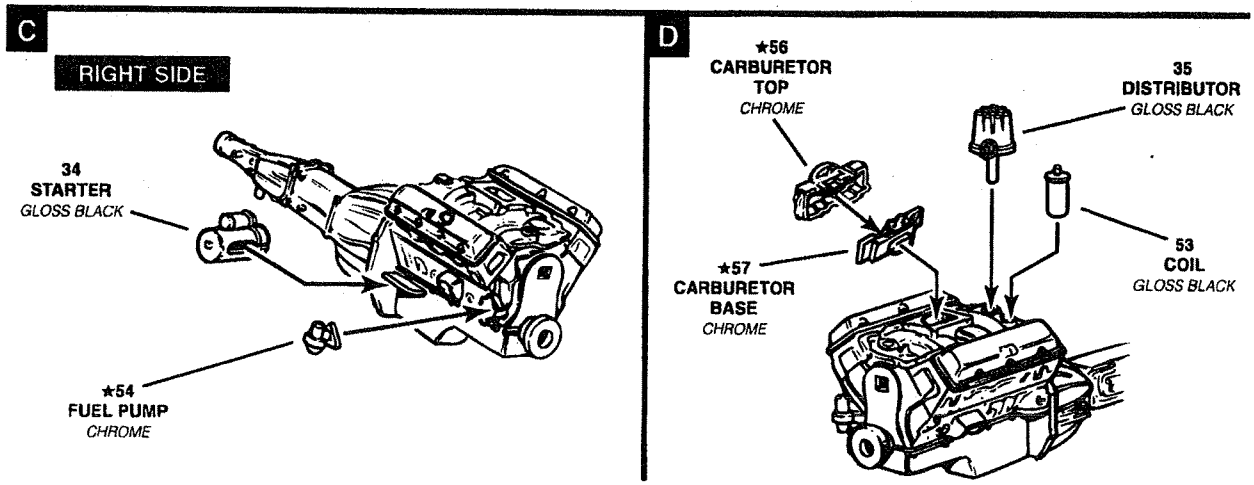

2 ENGINE ASSEMBLY CONTINUED

E

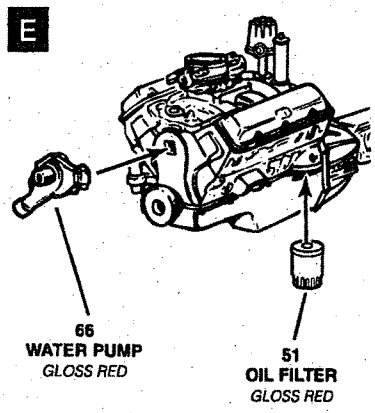

F

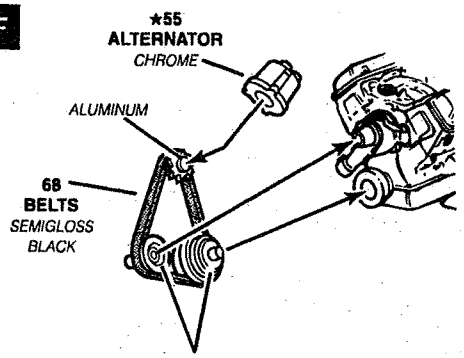

G

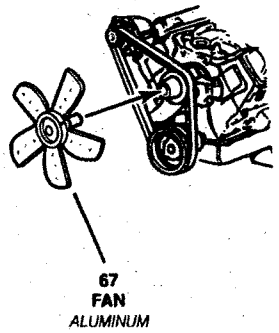

3 EXHAUST ASSEMBLY

RIGHT

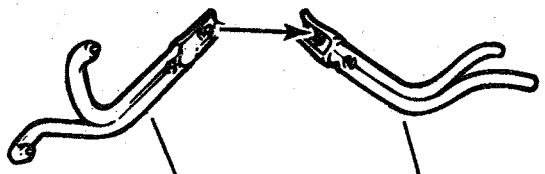

A

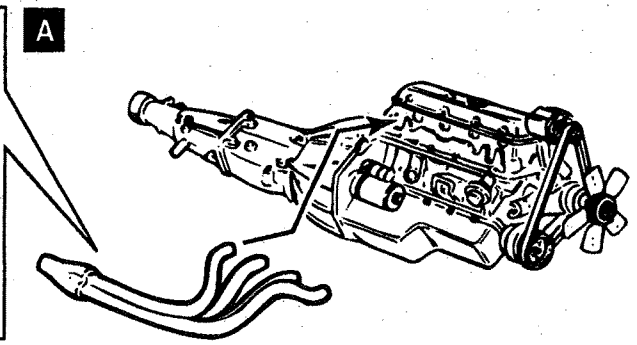

B

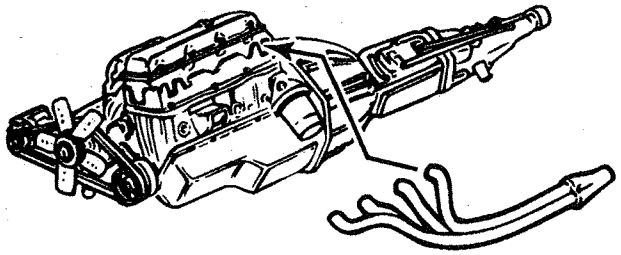

LEFT

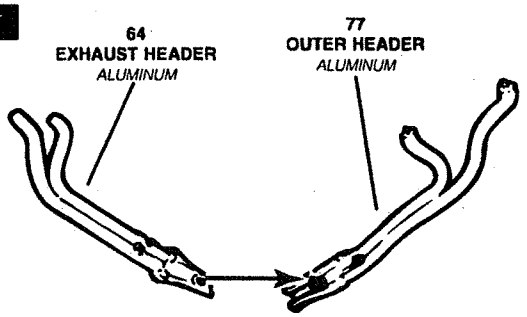

C

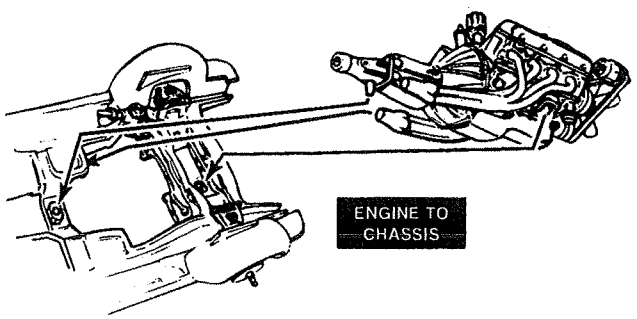

4 RADIATOR ASSEMBLY

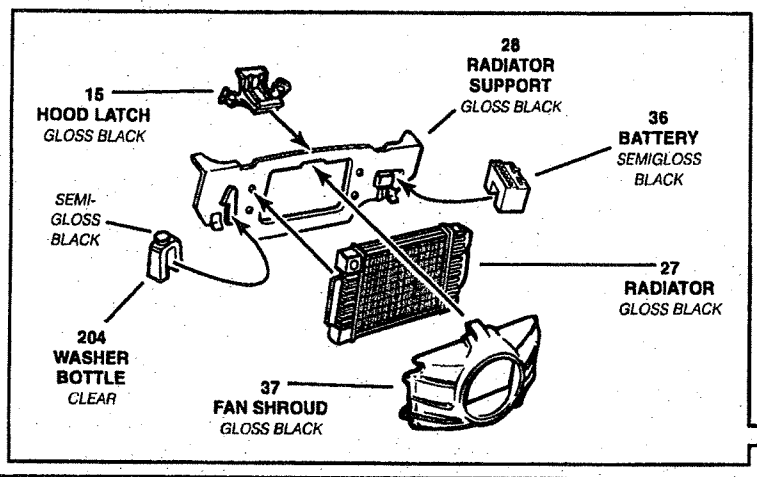

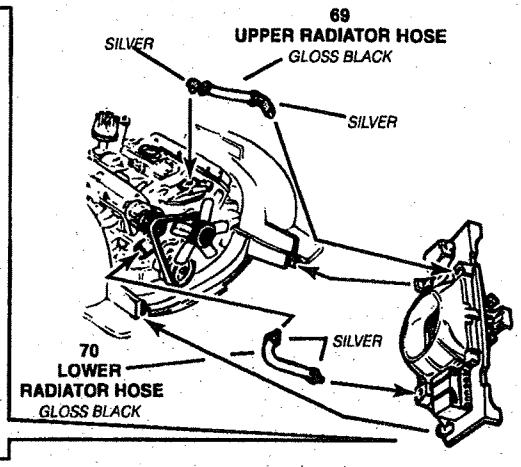

5 EXHAUST AND REAR SUSPENSION ASSEMBLY

A

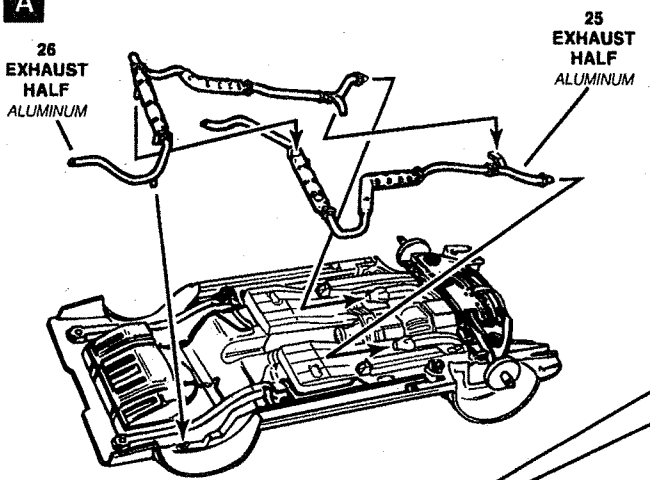

B

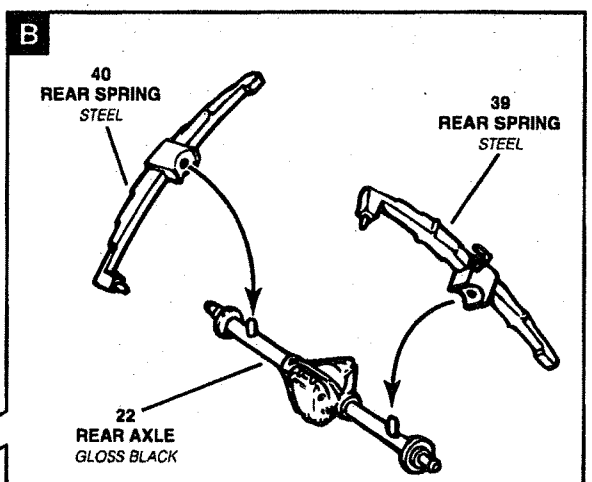

C

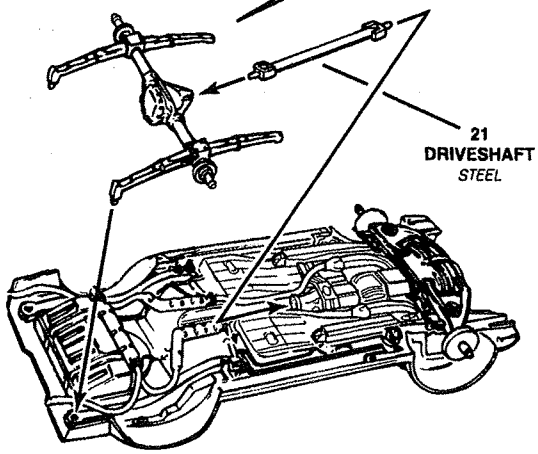

D

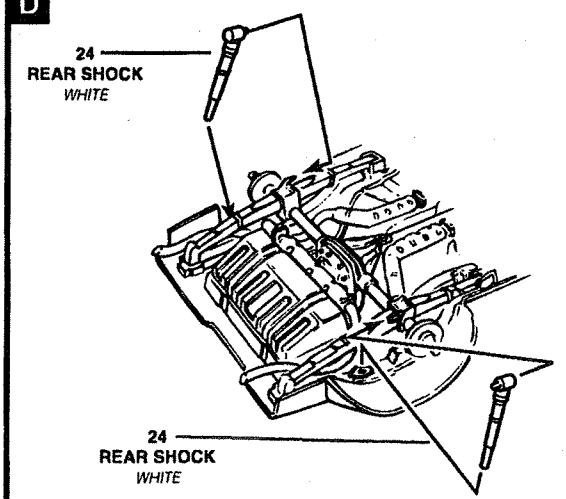

6 WHEEL ASSEMBLY

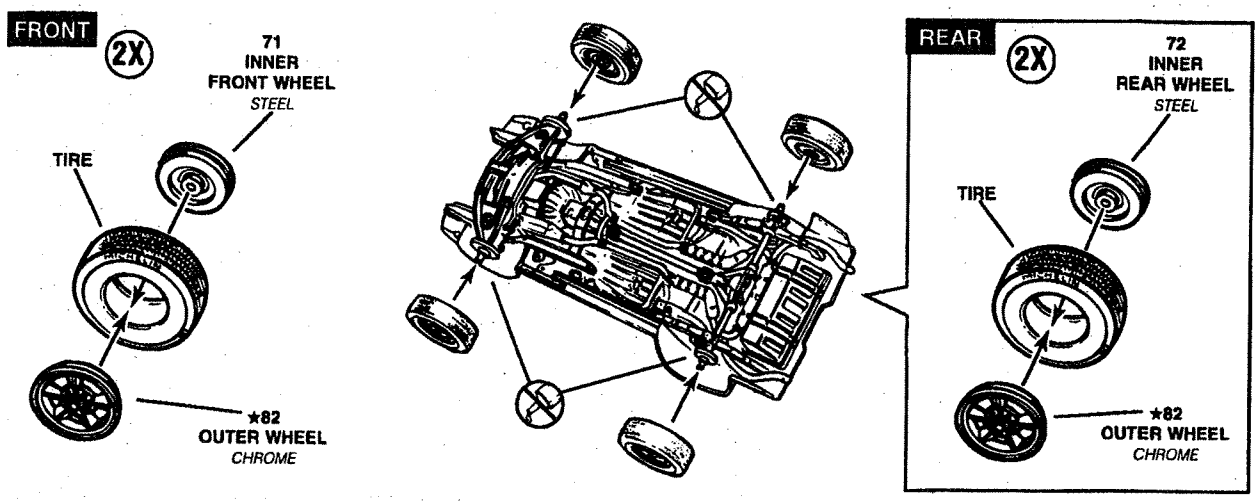

7 WINDOW AND TAIL LIGHT ASSEMBLY

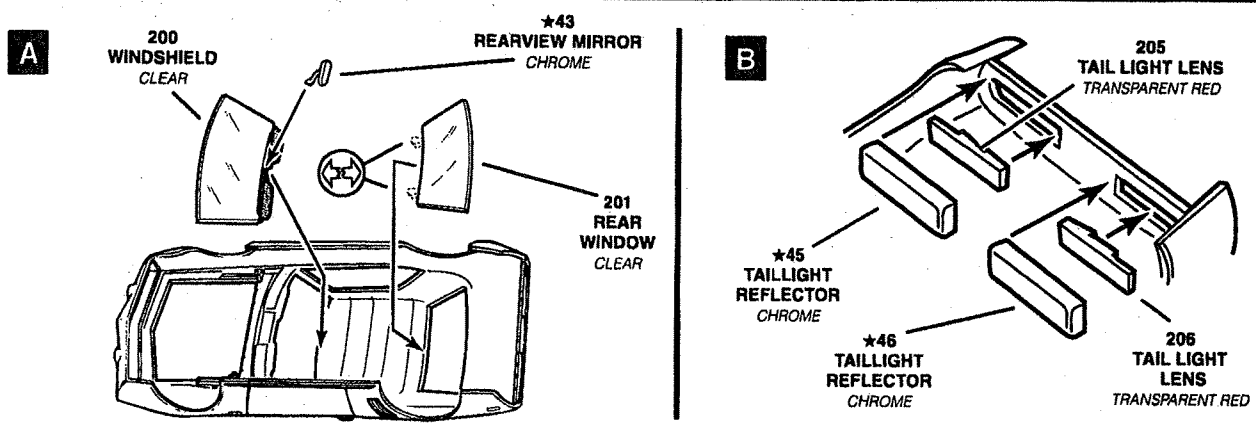

8 INTERIOR ASSEMBLY

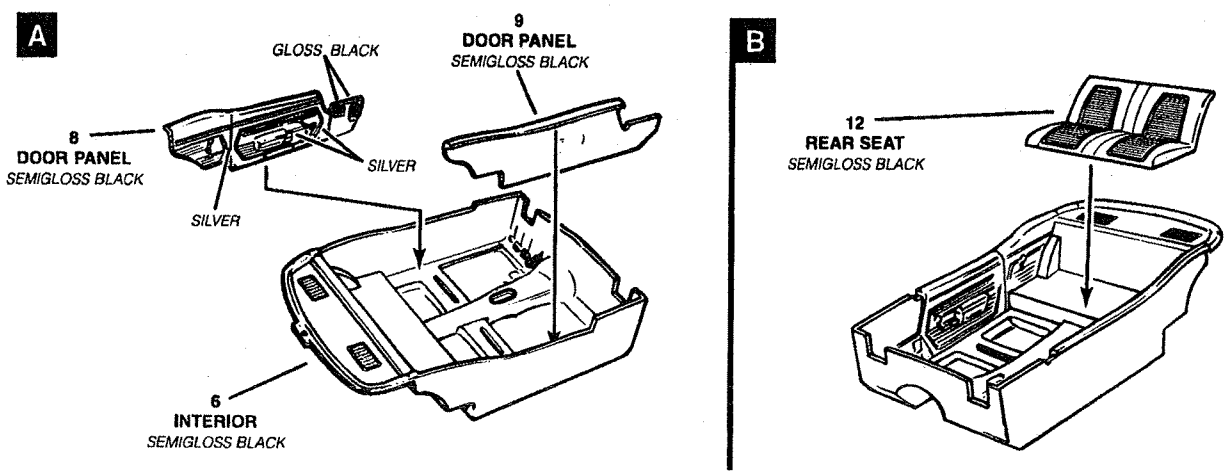

8 INTERIOR ASSEMBLY CONTINUED

C

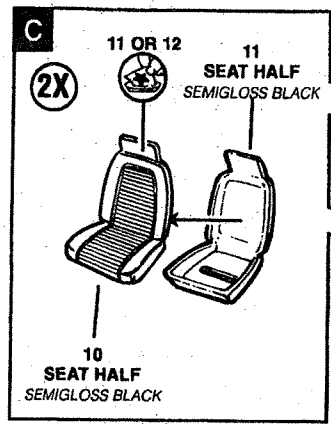

D

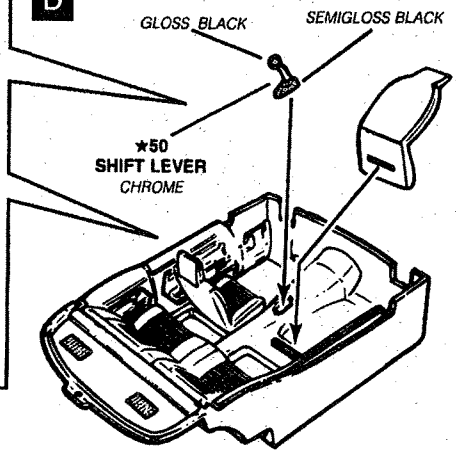

E

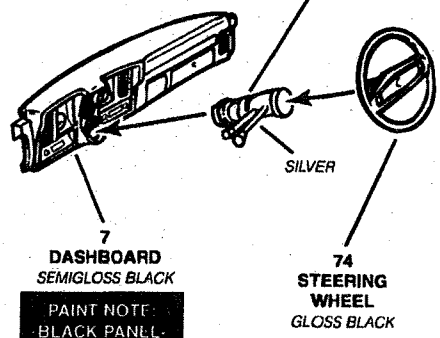

PAINT NOTE:
BLACK PANEL-
SILVER DETAILS

F

DASHBOARD TO INTERIOR

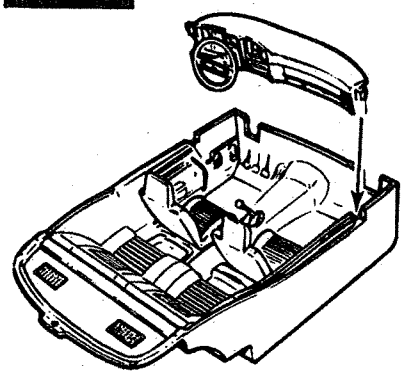

G

INTERIOR TO BODY

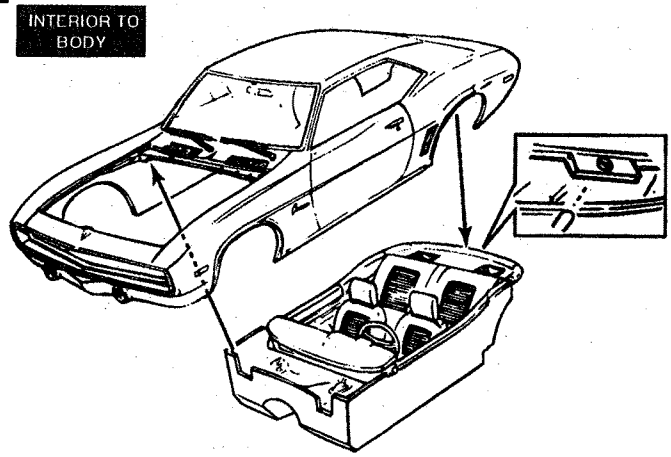

9 FIREWALL AND GRILLE ASSEMBLY

A

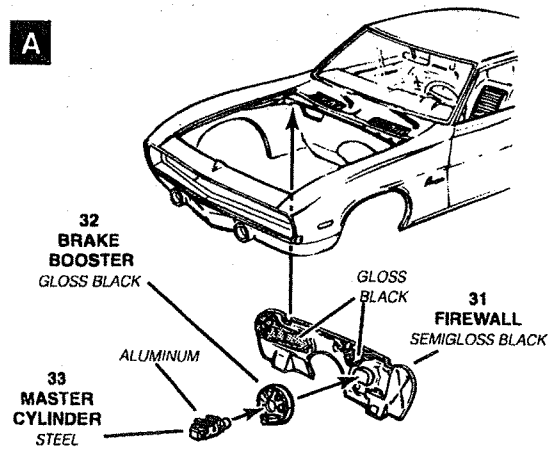

B

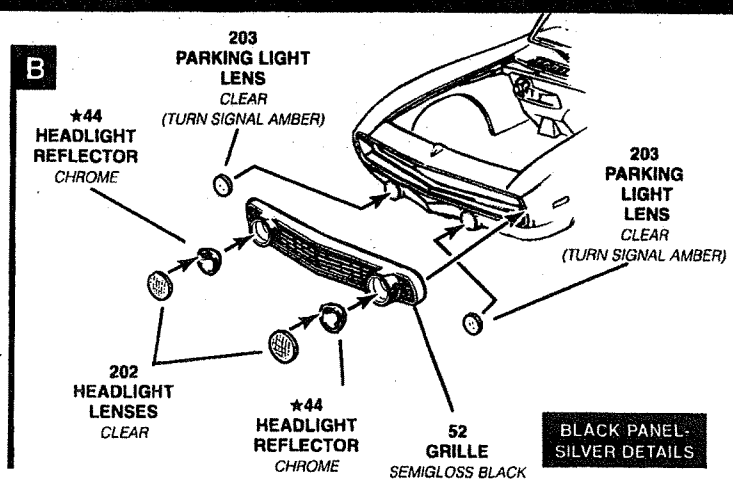

BLACK PANEL-
SILVER DETAILS

10 DETAIL ASSEMBLY

A

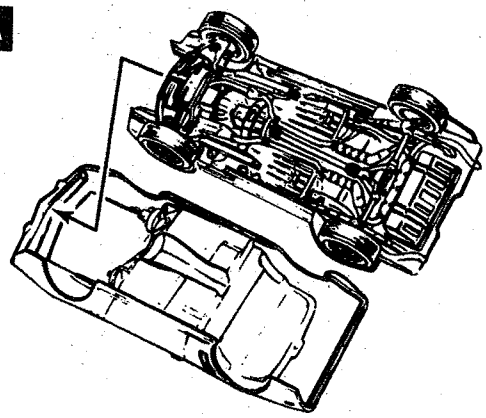

B

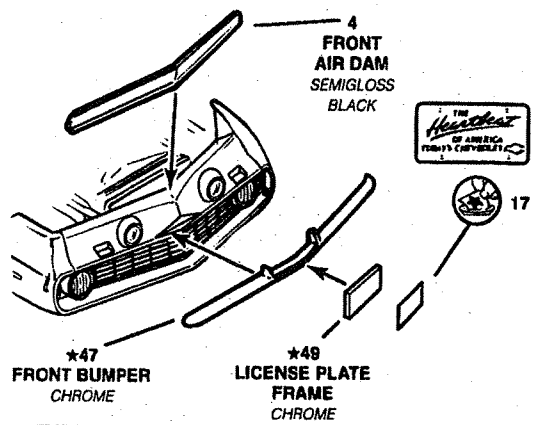

C

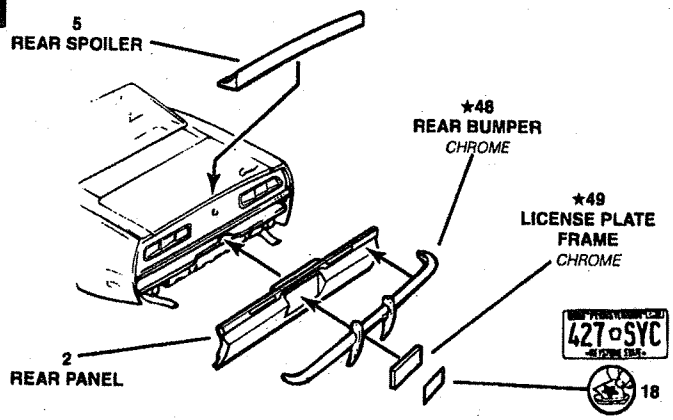

D

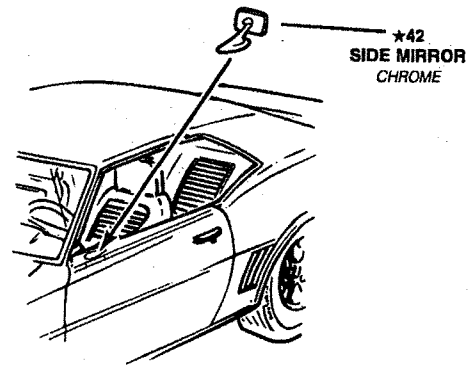

11 FINAL ASSEMBLY

A

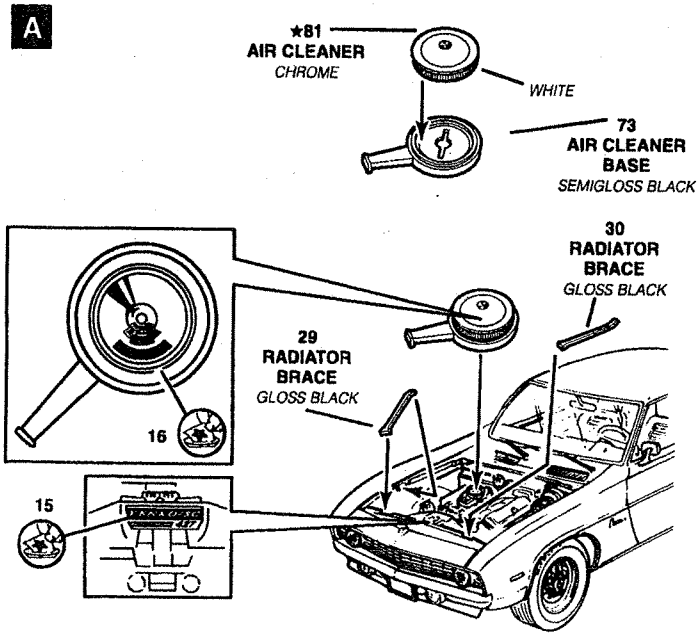

B

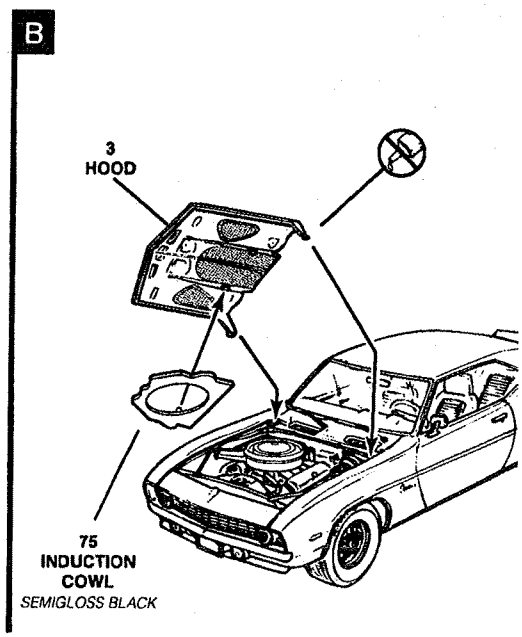

12 DECAL PLACEMENT

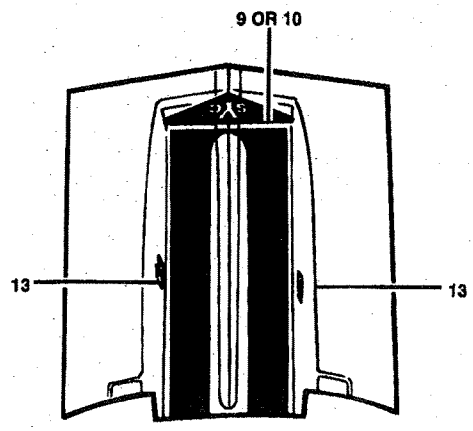

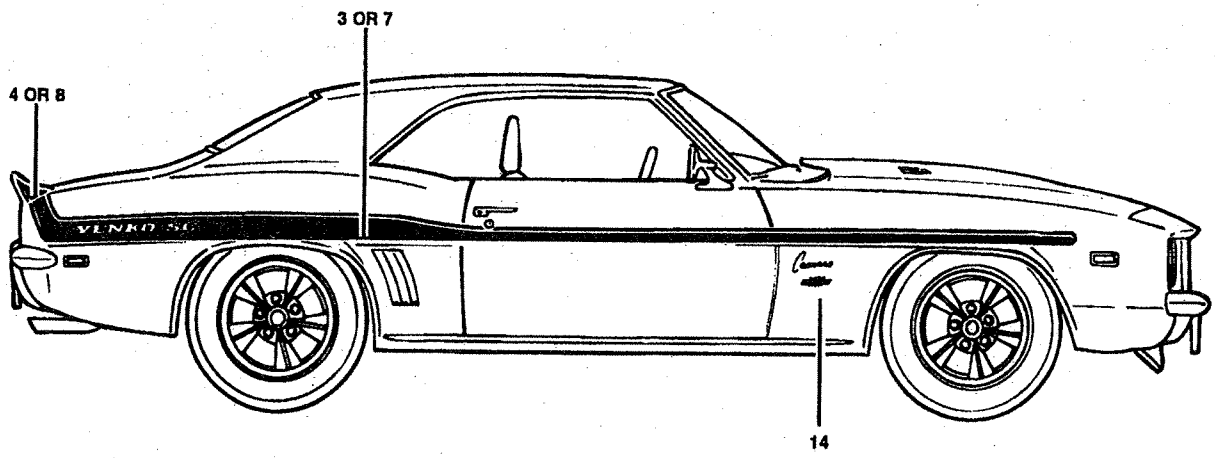

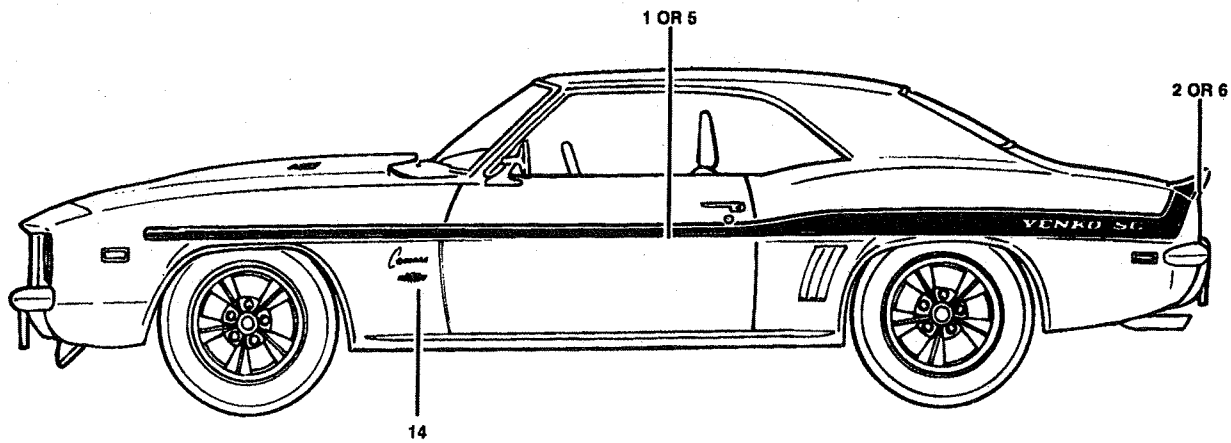

Terri Yenko Gould, Executor v. Supercar Collectables Ltd., et al.
Cancellation Proceeding No. 92052197

Petitioner's Exhibit No. 41

Revell®

KIT 4237

'69 CHEVY® NOVA YENKO

Yenko™ Chevrolet® located in the town of Cannonsburg, Pennsylvania, was one of the largest custom muscle car shops of the late 60's. The lightning quick Yenko™ cars were so popular that, in 1969, Yenko™ used Chevrolet ® Central Office Production Order (COPO) system to have 427 cubic-inch engines installed into the Chevy® Nova™ right on the factory assembly lines. The high performance and very limited production of all Yenko-customized cars makes them very valuable in todays collector car market.

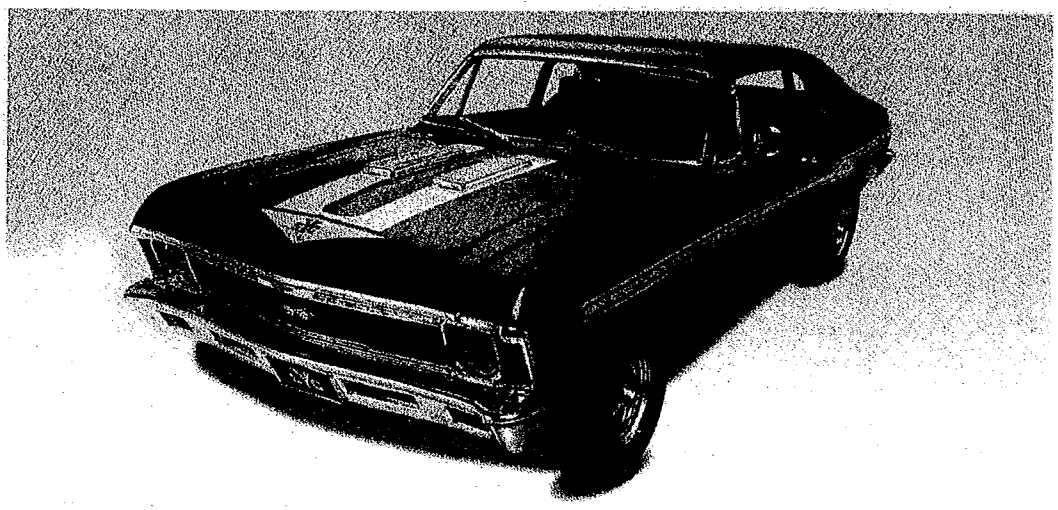

2X 4X	?		!			
* REPEAT SEVERAL TIMES * A REPETER PLUSIEURS FOIS	* OPTIONAL PARTS * PIECES EN OPTION	* DECAL * DECAL COMANIE	* ALTERNATIVE ASSEMBLY * ENSEMBLAGE ALTERNATIVE	* CEMENT TOGETHER * A COLLER	* REMOVE AND THROW AWAY * A RETIRER ET JETER	* DO NOT CEMENT * NE PAS COLLER

READ THIS BEFORE YOU BEGIN

- Study the assembly drawings.
- Each plastic part is identified by a number.
- In the assembly drawings, some parts will be marked by a star (★) to indicate chrome plated plastic.
- For better paint and decal adhesion, wash the plastic parts in a mild detergent solution. Rinse and let air dry.
- Check the fit of each piece before cementing in place.
- Use only cement for polystyrene plastic.
- Scrape plating and paint from areas to be cemented.
- Allow paint to dry thoroughly before handling parts.
- Any unused parts may be discarded.

DECAL APPLICATION INSTRUCTIONS

1. Cut desired decal from sheet.
2. Dip decal in water for a few seconds.
3. Place wet decal on paper towel.
4. Wait until decal is movable on paper backing.
5. Place decal in position on model, face up and slide backing away.
6. Press out air bubbles with a soft damp cloth.
7. Milkiness that may appear is for better decal adhesion and will dry clear. Wipe away any excess adhesive.
8. Do not touch decal until fully dry.
9. Allow the decals 48 hours to dry before applying clear coat.

NOTE: Decals are compatible with setting solutions or solvents.

LIRE CE QUI SUIT AVANT DE COMMENCER

- Etudier les schémas de montage.
- Chaque pièce en plastique est identifiée par un numéro.
- Sur les schémas de montage, certaines pièces sont marquées d'une étoile (★) pour indiquer qu'elles sont en plastique chromé.
- Pour une meilleure prise de la peinture et des autocollants, laver les pièces en plastique avec une solution détergente peu concentrée. Les rincer et les laisser sécher à l'air.
- Vérifier que chaque pièce s'ajuste bien avant de la coller en place.
- N'utiliser que de la colle pour polystyrène.
- Gratter les parties à coller pour enlever le chrome et la peinture.
- Laisser la peinture bien sécher avant de manipuler les pièces.
- Toute pièce inutilisée peut être jetée.

DIRECTIVES D'APPLICATION DES AUTOCOLLANTS

1. Découper l'autocollant désiré de la feuille.
2. Tremper l'autocollant dans de l'eau pendant quelques secondes.
3. Placer l'autocollant mouillé sur une serviette en papier.
4. Attendez que l'autocollant puisse être déplacé sur son support en papier.
5. Mettre l'autocollant en position sur le modèle face sur le dessus et faire glisser le support pour l'enlever.
6. Appuyer avec un chiffon doux humide pour éliminer les bulles d'air.
7. La substance laiteuse qui peut apparaître est destinée à améliorer l'adhésion de l'autocollant et devient incolore au séchage. Essuyer pour enlever tout excédent d'adhésif.
8. Ne pas toucher l'autocollant tant qu'il n'est pas bien sec.
9. Laisser l'autocollant sécher pendant 48 heures avant d'appliquer une couche transparente.

REMARQUE: Les autocollants sont compatibles avec les solutions de fixage ou les solvants.

This paint guide is provided to complete this kit as shown on the box.

Semi Gloss Black	*Noir satiné*
Gloss Red	*Rouge brilliant*
Aluminum	*Aluminum*
Silver	*Argent*
Steel	*Acier*
Chevy Engine Red	*Rouge moteur Chevrolet*
Turn Signal Amber	*Ambre*
Transparent Red	*Rouge transparent*

If you have any questions or comments, call our hotline at: (800) 833-3570
or, please write to:
Revell Inc Consumer Service Department, 1850 Howard Street Unit A, Elk Grove Village, Illinois 60007
Be sure to include the plan number (85423700200), part number, description, your return address and phone number.
Visit our website: www.revell.com

Revell Inc Elk Grove Village, IL. Copyright © 2009. All rights reserved.

CERTIFICATE UNDER 37 CFR 1.8: The undersigned hereby certifies that this correspondence is being deposited in the United States Postal Service, as first class mail, in an envelope addressed to: Commissioner for Trademarks, Box Post Reg Fee, 2900 Crystal Drive, Arlington, VA 22202-3513, on May 13, 2002

By: Patricia Cygan
Name: Patricia Cygan

M&G 11995.3US01-kla

COMBINED DECLARATION OF USE AND INCONTESTABILITY UNDER SECTIONS 8 AND 15

To the Commissioner for Trademarks

TRADEMARK INFORMATION

Mark: YENKO

Registration No.: 2,049,857

Registration Date: April 1, 1997

Class No(s): 28

OWNER INFORMATION

Name: Supercar Collectibles Limited
a Minnesota corporation

Address: 8669A Jefferson Highway
Osseo, MN 55369

GOODS INFORMATION

The owner has used the mark in commerce for five (5) consecutive years after the date of registration, or the date of publication under § 12(c), and is still using the mark in commerce on or in connection with all goods listed in the existing registration.

SECTIONS 8 AND 15 DECLARATION OF USE IN COMMERCE

The owner is using the mark in commerce on or in connection with the goods identified above, as evidenced by the attached specimen(s) showing the mark as currently used in commerce. The mark has been in continuous use in commerce for five (5) consecutive years

05/28/2002 GTHOMAS2 00000109 2049857

01 FC:372 100.00 OP
02 FC:373 200.00 OP

after the date of registration, or the date of publication under § 12(c), and is still in use in commerce on or in connection with all goods listed in the existing registration. There has been no final decision adverse to the owner's claim of ownership of such mark for such goods, or to the owner's right to register the same or to keep the same on the register; and there is no proceeding involving said rights pending and not disposed of either in the Patent and Trademark Office or in the courts.

The undersigned, being hereby warned that willful false statements and the like are punishable by fine or imprisonment, or both, under 18 USC § 1001, and that such willful false statements and the like may jeopardize the validity of this document, declares that I am properly authorized to execute this document on behalf of the Owner; and all statements made of my own knowledge are true and that all statements made on information and belief are believed to be true.

POWER OF ATTORNEY

The undersigned hereby appoints Gregg I. Anderson, Reg. No. 28,828; Brian H. Batzli, Reg. No. 32,960; John L. Beard, Reg. No. 27,612; Linda M. Byrne, Reg. No. 32,404; John A. Clifford, Reg. No. 30,247; Ronald A. Daignault, Reg. No. 25,968; Mark J. DiPietro, Reg. No. 28,707; Sandra Epp Ryan, Reg. No. 39,667; Kristina M. Foudray; Charles E. Golla, Reg. No. 26,896; Gregory C. Golla; John D. Gould, Reg. No. 18,223; Curtis B. Hamre, Reg. No. 29,165; Scott W. Johnston, Reg. No. 39,721; D. Randall King; Paul E. Lacy, Reg. No. 38,946; Anna W. Manville; John B. Phillips, Reg. No. 37,206; Brent E. Routman; Michael D. Schumann, Reg. No. 30,422; Gregory A. Sebald, Reg. No. 33,280; John R. Wahl, Reg. No. 33,044; and Paul A. Welter, Reg. No. 20,890 as attorneys with the full power to represent the owner in connection with this registration.

Please direct all correspondence to the attention of:

Paul A. Welter, Esq.
Merchant & Gould P.C.
P.O. Box 2910
Minneapolis, MN 55402-0910
612/332-5300

Supercar Collectibles Limited

Dated: April 29, 2002

By: Scott Dahlberg
Name: Scott Dahlberg
Title: President

Reg. No. 2,049,857 TRADEMARK

IN THE UNITED STATES PATENT AND TRADEMARK OFFICE

Registrant:	Supercar Collectibles Limited		
Reg. No.:	2,049,857	Docket No.:	11995.3US01
Reg. Date:	April 1, 1997		
Mark:	YENKO		

CERTIFICATE UNDER 37 CFR 1.8: The undersigned hereby certifies that this correspondence is being deposited in the United States Postal Service, as first class mail, in an envelope addressed to: Box POST REG FEE, Commissioner for Trademarks, 2900 Crystal Drive, Arlington, VA 22202-3513, on May 13, 2002.

By: Patricia Cygan
Name: Patricia Cygan

CHANGE OF CORRESPONDENCE ADDRESS

Commissioner for Trademarks
2900 Crystal Drive
Arlington, VA 22202-3513

Dear Sir:

We have moved our Minneapolis office. Therefore, to insure that we continue to receive correspondence and papers pertaining to this matter, please change the correspondence address for the above-captioned matter as follows:

Paul A. Welter
Merchant & Gould P.C.
P.O. Box 2910
Minneapolis, Minnesota 55402-0910

If there are any questions regarding this matter, please call the undersigned at 612.332.5300.

Respectfully submitted,

MERCHANT & GOULD P.C.
P.O. Box 2910
Minneapolis, Minnesota 55402-9944
(612) 332-5300

Date: 5-13-02

Paul A. Welter
Reg. No. 20,890
PAW:KLA:PSTpmc

Merchant & Gould

An Intellectual Property Law Firm

P.O. Box 2910
Minneapolis, Minnesota
55402-0910 USA
TEL 612.332.5300
FAX 612.332.9081
www.merchant-gould.com

Direct Contact | 612.336.4600
pwelter@merchant-gould.com

A Professional Corporation

In re Registration of: Supercar Collectibles Limited

Mark: YENKO
Reg. No.: 2,049,857

Docket No.: 11995.3US01
Due Date: April 1, 2003
Registration Date: April 1, 1997

CERTIFICATE UNDER 37 CFR 1.8: The undersigned hereby certifies that this Transmittal Letter and the paper, as described herein, are being deposited in the United States Postal Service, as first class mail, in an envelope addressed to: Commissioner for Trademarks, Box POST REG FEE, 2900 Crystal Drive, Arlington, VA 222023513, on May 13, 2002.

By: Patricia Cyga
Patricia Cyga

Commissioner for Trademarks
BOX POST REG FEE
2900 Crystal Drive
Arlington, VA 22202-3513

Dear Commissioner:

We are transmitting herewith the attached:

- ☒ Transmittal Sheet in duplicate.
- ☒ Return postcard.
- ☒ Check in the amount of $300.00.
- ☒ Combined Declaration of Use and Incontestability Under Sections 8 and 15 with Two Sheets of Specimens for Class 28.
- ☒ Other: Change of Correspondence Address.

Please charge any additional fees or credit overpayment to Deposit Account No. 13-2725. A duplicate copy of this sheet is enclosed.

By:
Name: Paul A. Welter
Reg. No.: 20,890
PWelter:KLA:PSTpmc

(TM POST-REGISTRATION FILING)

K

Mark: YENKO
Registration No.: 2,049,857
Class No(s): 28

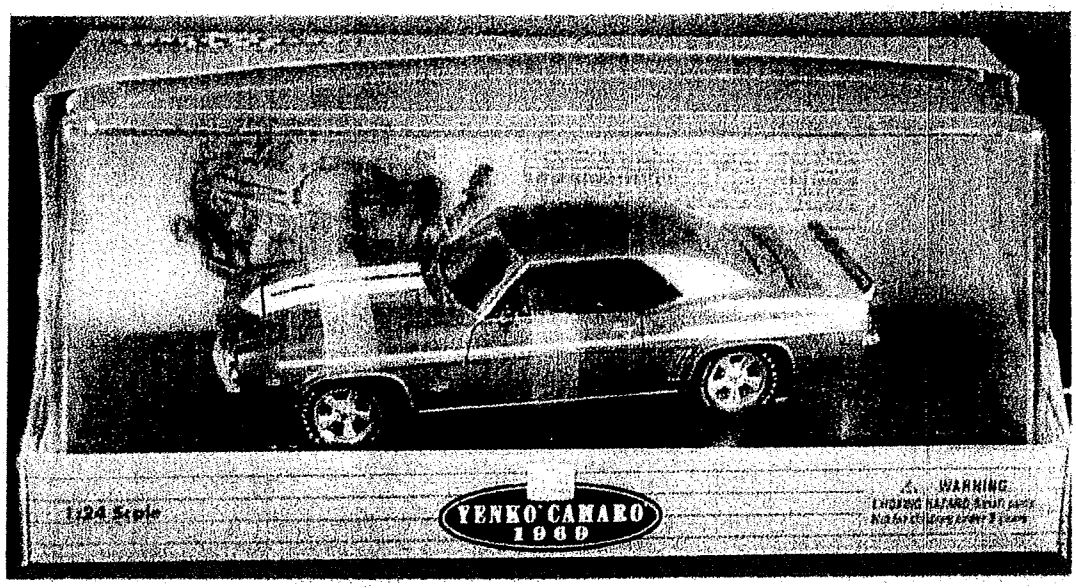

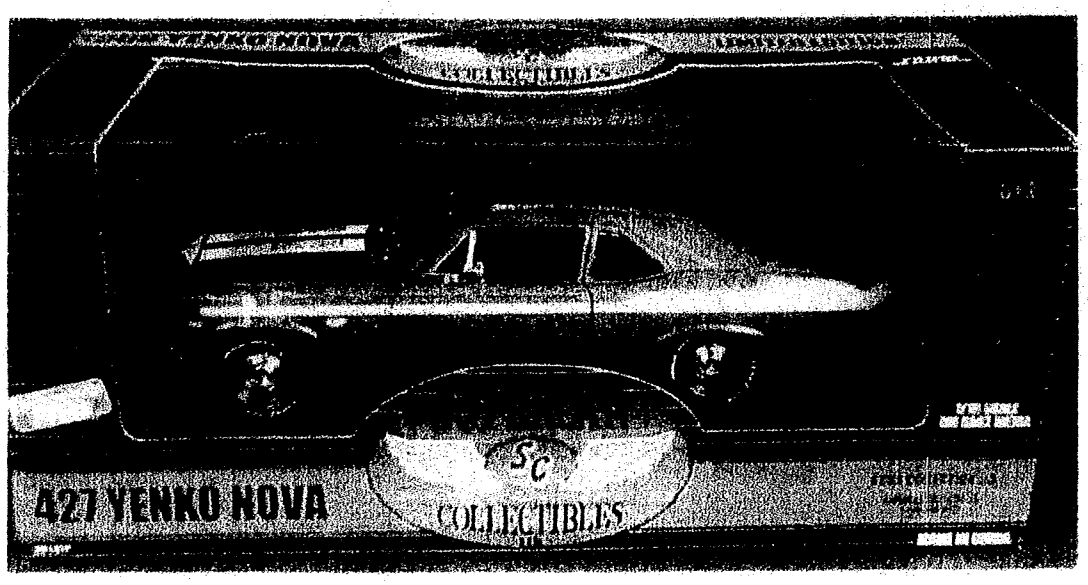

CERTIFICATE OF SERVICE

I hereby certify that a true and complete copy of the foregoing **Petitioner's Exhibit Nos. 37-42 accompanying Non-Confidential Testimony of Scott D. Dahlberg** has been served on George E. Bullwinkel, Esq. by mailing said copy on September 29, 2011, via electronic mail and First Class Mail, postage prepaid to:

George E. Bullwinkel
Attorney at Law
425 Woodside Avenue
Hinsdale, IL 60521

Gregg A. Injejikian