ESTTA Tracking number: **ESTTA394395**

Filing date: **02/22/2011**

IN THE UNITED STATES PATENT AND TRADEMARK OFFICE
BEFORE THE TRADEMARK TRIAL AND APPEAL BOARD

Proceeding	92051140
Party	Plaintiff Leonid Nahshin
Correspondence Address	VERA CHERNOBYLSKY LAW OFFICES OF VERA CHERNOBYLSKY 4623 DUNMAN AVENUE WOODLAND HILLS, CA 91364 UNITED STATES vchernob@yahoo.com
Submission	Testimony For Plaintiff
Filer's Name	Vera Chernobylsky
Filer's e-mail	vchernob@yahoo.com
Signature	/Vera Chernobylsky/
Date	02/22/2011
Attachments	Testimony of Nahshin and Exhibit Part 1.pdf (8 pages)(336291 bytes) Doc. 1-25.pdf (25 pages)(882653 bytes) Doc. 26-50.pdf (25 pages)(1347191 bytes) Doc. 51-77.pdf (27 pages)(1442531 bytes) Doc. 78-106.pdf (29 pages)(1741747 bytes) Doc. 107-117.pdf (11 pages)(5471071 bytes) Doc. 118-128.pdf (11 pages)(5758004 bytes)

IN THE UNITED STATES PATENT AND TRADEMARK OFFICE
The Trademark Trial and Appeal Board

In the matter of US Registration No. 3,350,041,
For the mark NIC-OUT,

Leonid Nahshin,	:	
	:	
Petitioner,	:	
	:	
vs.	:	Cancellation No. 92051140
	:	
Product Source International, LLC,	:	
	:	
Registrant.	:	

TESTIMONY OF LEONID NAHSHIN

I, Leonid Nihshin, of Hazvi 153/36 Beer-Sheva, Israel, being first duly sworn under the oath, state the following:

The information contained in this testimony is true and is based upon my personal knowledge.

1. Please give your full legal name and full address.

My name: Nahshin Leonid
My address: HaZvi st.153/36 Beer-Sheva Israel
Mailing Address:
P.O. Box 3599 84746 Beer-Sheva. Israel

2. Have you been known by any other names?

I had not been known under other names, but people know the name of my business - "P.Service". I am an owner of "P. Service".

3. Please describe in detail the general line of work you are currently engaged in.

I am a business owner of "P. Service" company. I am managing this business. In this business, the only one line of work is selling the cigarette filters "Nic-Out" .

4. How long have been you been engaged in this line of work?

I have been working in this line of work since 1999.

5. How did you come up with the name NIC OUT?

We had to come up with a name that would sound good in many languages and transmitted to the nature of the holder. My wife is fluent in English and together we came up with the name "Nic-Out". It was a successful combination, since it is abbreviated as NIC-nicotine, the most harmful substance in cigarettes, and OUT, then-throw, leaving the outside. It was at early 2000.

6. When precisely was the shipment with "NIC-OUT" forwarded to Yael Menkin?

In early November 2000, I sent a few blocks of "NIC-OUT" to the U.S. for Yael Menkin, she lived in the U.S., so that she began to look for to potential clients in the U.S., check out the filters market in America and the price levels. These were filters "NIC-OUT". About 4 blocks, included 80 packs. The parcels weight was 3.5 kg., sent by express mail.

7. Please describe in details the nature of your business arrangement with "Burda Ticaret"?

It was the business transaction between the product manufacturer and the owner of the trademark "NIC-OUT". I have been taking orders and money from the customers and place the orders for the production for the required number of disposable filters for my brand "NIC-OUT" in "BURDA TICARET". "BURDA TICARET" was producing and shipping goods according to my instructions. I was paying for their work.

8. Do you have written agreements with Burda Ticaret?

Yes, I do. At that time when I worked with "BURDA TICARET" we had an agreement, which was signed on January 1, 2001

9. In April of 2002 Safety Aid Supplies Inc. received their first large shipment of the NIC-OUT product for distribution and sale in the U.S". Did you oversee the selection of Nicolas Maslov as the distributor of the NIC-OUT product, and if so, please explain in detail the events surrounding that selection?

One of the employees of my business was familiar with Nikolai Maslov. Nikolai Maslov was permanently resided in America. We asked him to do the introduction of "NIC-OUT" in the U.S. market. Mr. Maslov responded very quickly on our proposal and presented a program of action. I liked this program and we began to cooperate. It was important that he agreed to make 100% payment in advance for the goods. It also strongly influenced our choice.

10. Do you have written agreements with Nikolai Maslov?

Yes, I do. We had an agreement, which was signed on March 15, 2002.

11. When and how the first shipment of "Nic-Out" was sent to US for Nikolai Maslov?

In April 2002, me and my producer "BURDA TICARET" sent the first industrial cargo of "NIC-OUT" to America for "Safety Aid Supplies Inc." 20 master-cases.

The cargo was sent with the airline:
BRITISH AirWays, Flight: BA -677
AWB 12584260886.
The cargo arrived in NY April 02, 2002.
The Cargo was cleared from custom and took by company "Safety Aid Supplies Inc".

12. Were there more orders "Nic-Out" for America?

"Safety Aid Supplies Inc." became to order from me the "NIC-OUT" in the U.S. constantly, until 2008 inclusive. Only in 2007, "Safety Aid Supplies Inc." purchased from us the "NIC-OUT" for the United States more than 145 thousand dollars. This is only a few documents for goods shipped to America during this period:

13. Please explain the nature of your involvement in the selection and registration of the domain name "nic-out.com" for the website.

Domain name "nic-out.com" was chosen by me personally according to the name of holders "Nic-Out".

Following my direction, in September 12, 2002, the manager of my company "P. Service" Alex Slobidker registered the domain nic-out.com.

Also, at the same moment the site www.nic-out.com was opened. The site is working today and is being actively promoted. The site is also an online store. Since 2005, direct sales of "NIC-OUT" from the site began, including the sales in the United States. The site and the product was known in the U.S., so customers have started to buy directly from the site. The document also indicates the address of the customers.

It should be noted that the site of the opponents - www.nicout.tv - was registered much later, in 2006.

14. What involvement did you have in the website's design, layout, content, advertising strategies, or other operations generally?

All articles on the site were written by me, based on personal knowledge that can confirm a sales manager, Alexander Slobidker.

15. How do you want to protect and register TM "Nic-Out" in the U.S.?

I asked from Yael Menkin to find for me a lower and to patent TM "NIC-OUT in the USA On January 23, 2003, Yael Menkin filed USPTO Trademark Application. The USPTO Trademark Application Serial Number 78206651 with USPTO Word Mark: "NIC-OUT" for International Class "034" , Goods & Services described as "G & S: cigarette filter holder to reduce the inhalation of tar and nicotine.; cigarette filter holder to reduce the inhalation of tar and nicotine." In 2004 we had to abandon this Trademark Application due to existence of prior pending Trademark Application Serial No. 78-163268.

16. What do you know about the goods "NIC-OUT ", has been sending for "PRODUCT SOURCE INTERNATIONAL"?

And since 2006 during all 2007 P.Service has been sending goods also for "PRODUCT SOURCE INTERNATIONAL".

17. What kind of business relationship existed between you and Mr. Higgins, "Product Source International" owner?

Mr. Higgens behaves with me as "NIC-OUT" producer and owner. Mr. Higgens was the only one of the buyers of our products.

18. Why do you think that Mr. Higgens behaves with you as an owner of "Nic-Out"?

This can be seen from the correspondence.

At all AWB (AIR WAYBILL) for PRODUCT SOURCE INTERNATIONAL Was written: Shipers Name: "P.Service. Israel is the exclusive proprietor of "P. Service cigarette filters" . From Mr. Nigensa had no objection. It was not just once but several times. He fit all.

19. What do you know about the actions of Mr.Higgins in 2009 to prevent the export of "Nic-Out" from P.Service in America?

At August 2009 Mr.Higgins closed access of "NIC-OUT" to American market. By this act he damaged our business.
I have suffered huge losses. Business in America, which I honestly had built 10 years, was stopped. It's awful. I feel as if I stole the thingin my life.

Deponent is required to produce at the deposition the materials described in Exhibit A attached to this document and incorporated by reference.

DATED this 21 day of February, 2011

By: _____
Leonid Nahshin

SWORN AND SUBSCRIBED TO before me this 21 day of February, 2011

Notary Public: _____ (signature)

Notary Public: Tsipris Viktor (Typed/Printed name of Notary Public)

Commission No. 18463

My Commission Expires: Everlasting

נוטריון * NOTARY * NOTAIRN
ויקטור
ציפריס
VIKTOR
TSIPRIS

Respectfully submitted this 22 day of February, 2011.

Law Offices of Vera Chernobylsky

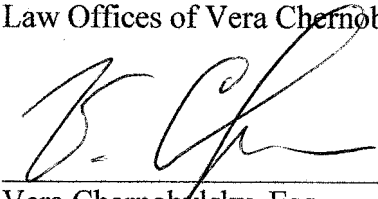

Vera Chernobylsky, Esq.
4623 Dunman Avenue
Woodland Hills, CA 91364
Attorney for the Petitioner

IN THE UNITED STATES PATENT AND TRADEMARK OFFICE
The Trademark Trial and Appeal Board

In the matter of U.S. Registration 3,350,041,
For the mark NIC OUT,
Registered on the Principal Register on December 4, 2007.

Leonid Nahshin,	:	
	:	
Petitioner,	:	
	:	
vs.	:	Petition No. 92051140
	:	
Product Source International, LLC,	:	
	:	
Registrant.	:	

CERTIFICATE OF SERVICE

I HERBEY CERTIFY that a true and accurate copy of the foregoing testimony and Exhibit A (Documents 000001-000184) were submitted, this 22 day of February, 2011, to the following via first-class U.S. Mail, postage pre-paid:

Jay DiMarino
A.J. DiMarino PC
57 Euclid Street, Suite A
Woodbury, NJ 08096

Vera Chernobylsky, Esq.

EXHIBIT A

Gmail by Google

Alex Slobidker <slobidker@gmail.com>

Request for quote on Nic out

1 message

Eugene Higgins <psillc@comcast.net> **Fri, Aug 18, 2006 at 15:55**
To: Leon Haxman <nic-out@nic-out.com>

ATTN: Mr Leon Haxman
Thank you for your fax. Please send a Vol. / Price quote for Nic Out quantities from 20 Master cartons (14,400 packs) to 500 master cartons (360,000 packs).
Best Regards
Eugene Higgins
President: Product Source International LLC

100000

Gmail by Google

Alex Slobidker <slobidker@gmail.com>

Purchase order - PSI-LLC

21 messages

Eugene Higgins <psillc@comcast.net> **Thu, May 10, 2007 at 15:55**
To: info@nic-out.com

Product Source

International LLC

13 Coleman Rd. Berlin, NJ, 08009

Tel: (856) 753-8127 Fax: (856) 753-3713

HYPERLINK "mailto:Psillc@comcast.net"Psillc@comcast.net

TO: Mr. Nahshin
RE: Volume Quotation for Nic Out

I would like to purchase 21 master cases deliverable to Philadelphia, PA.
via air transport
at $0.87 as quoted previously by you, a total of $12,528.00 USD this is
for immediate shipment.
I would like to speak with Mr. Nahshin, please send contact number and
best time for call this week.
Best regards
Eugene Higgins

No virus found in this incoming message.
Checked by AVG Free Edition.
Version: 7.5.467 / Virus Database: 269.6.8/797 - Release Date: 10.05.2007
17:10

winmail.dat
0K

Info Nic-Out <info@nic-out.com> **Thu, May 10, 2007 at 16:16**
To: Eugene Higgins <psillc@comcast.net>
Bcc: sent@nic-out.com

Dear Sir,
Thanks a lot for you letter.
I would like to correct the total amount:
21MC *720 packs in each MC*0.87USD = 13154,40 USD

000002

You can contact me tomorrow at any time starting from 10:00 AM (Our GMT is +02:00)
+972-554-929405

Waiting for your call.

Yours faithfully,
Alex

From: Eugene Higgins [mailto:psillc@comcast.net]
Sent: Thursday, May 10, 2007 10:56 PM
To: info@nic-out.com
Subject: Purchase order - PSI-LLC
Importance: High

Product Source
International LLC

13 Coleman Rd. Berlin, NJ, 08009

Tel: (856) 753-8127 Fax: (856) 753-3713

HYPERLINK "mailto:Psillc@comcast.net"Psillc@comcast.net

TO: Mr. Nahshin
RE: Volume Quotation for Nic Out

I would like to purchase 21 master cases deliverable to Philadelphia, PA. via air transport
at $0.87 as quoted previously by you, a total of $12,528.00 USD this is for immediate shipment.
I would like to speak with Mr. Nahshin, please send contact number and best time for call this week.
Best regards
Eugene Higgins

No virus found in this incoming message.
Checked by AVG Free Edition.
Version: 7.5.467 / Virus Database: 269.6.8/797 - Release Date: 10.05.2007 17:10

No virus found in this outgoing message.
[Quoted text hidden]

---

winmail.dat
0K

Eugene Higgins <psillc@comcast.net> **Thu, May 10, 2007 at 19:34**
To: Info Nic-Out <info@nic-out.com>

Thank you Alex
Sorry for the miscaculation

000003

I will call our time 9 am or 5pm your time?
Eariler if possible.
I need to ask about means of payment and quality assurance
Do you use SKYPE.com?
I find it invaluable for international communications it has chat and
telephone fuctions and is for course FREE to use.
If you'd like my SKYPE address is PSILLC our company abbreviation.
Best regards
Gene-PSI-LLC
[Quoted text hidden]

winmail.dat
0K

Info Nic-Out <info@nic-out.com> **Fri, May 11, 2007 at 00:10**
To: Eugene Higgins <psillc@comcast.net>

Hello,
I will contact you by Skype during the day.

Thanks,
Alex

From: Eugene Higgins [mailto:psillc@comcast.net]
Sent: Friday, May 11, 2007 2:35 AM
To: Info Nic-Out
Subject: Re: Purchase order - PSI-LLC
[Quoted text hidden]

winmail.dat
0K

Eugene Higgins <psillc@comcast.net> **Fri, May 11, 2007 at 09:21**
To: Info Nic-Out <info@nic-out.com>

Alex
I called you at the time I said I would but there was no answer or
answering machine to leave a message.
What is your SKYPE name? It is 9:20 and I will call after my meeting this
morning.
Also please send payment procedures along with product guarantee.
If we can work this out quickly, and get the 21 MC's here in the next
couple of days,
I will shift some of our monthly purchase of Nic Out permanently to your
company.
Best regards
Gene PSI-LLC
—— Original Message ——
From: HYPERLINK "mailto:info@nic-out.com"Info Nic-Out
To: HYPERLINK "mailto:psillc@comcast.net"'Eugene Higgins'
[Quoted text hidden]

000004

winmail.dat
0K

Info Nic-Out <info@nic-out.com> **Fri, May 11, 2007 at 14:19**
To: Eugene Higgins <psillc@comcast.net>
Bcc: sent@nic-out.com

Hello,
Our payment procedure is 100% in advance.
Please transfer the money to the following bank account:

Bank: Leumi 922
Merkaz Hanegev, 54
Beer-Sheva, Israel
Account: 013872/68 (P.Service)
Swift-code: LUMI-ILI TTLV

Your order will be placed immediately. Do not forget to send the detailed shipping address.

Yours sincerely,
Alex

From: Eugene Higgins [mailto:psillc@comcast.net]
Sent: Friday, May 11, 2007 4:21 PM
[Quoted text hidden]

winmail.dat
0K

Eugene Higgins <psillc@comcast.net> **Fri, May 11, 2007 at 16:00**
To: Info Nic-Out <info@nic-out.com>

Alex
As we haven't done business previously we need some sort of asurance that you will ship in a timely manner.
What do you suggest 50% deposit and 505 upon presentation of shipping manifest? Or possibly a letter of credit.
Best regards
Gene -PSI-LLC
---- Original Message ----
From: HYPERLINK "mailto:info@nic-out.com"Info Nic-Out
To: HYPERLINK "mailto:psillc@comcast.net""Eugene Higgins'
[Quoted text hidden]
Version: 7.5.467 / Virus Database: 269.6.8/800 - Release Date: 11.05.2007 19:34

000005

winmail.dat
0K

Info Nic-Out <info@nic-out.com> **Sat, May 12, 2007 at 02:39**
To: Eugene Higgins <psillc@comcast.net>
Bcc: sent@nic-out.com

Hello Gene,
I agree with you.
50% deposit and 50% upon presentation of AirWay bill.

Regards,
Alex

From: Eugene Higgins [mailto:psillc@comcast.net]
Sent: Friday, May 11, 2007 11:01 PM
[Quoted text hidden]

[Quoted text hidden]

winmail.dat
0K

Eugene Higgins <psillc@comcast.net> **Sat, May 12, 2007 at 09:24**
To: Info Nic-Out <info@nic-out.com>

Alex
Done I will send the wire with other wires first thing Monday morning.
FOB point would be Philadelphia, PA.
How long to the actual shipment and how long to Philadelphia?
We are ramping up sales of Nic Out here and will need increasing shipments to meet demand in the 4th Qtr.
Best regards
Gene-PSI-LLC

---- Original Message ----
From: HYPERLINK "mailto:info@nic-out.com"Info Nic-Out
To: HYPERLINK "mailto:psillc@comcast.net"'Eugene Higgins'
[Quoted text hidden]

winmail.dat
0K

Info Nic-Out <info@nic-out.com> **Sat, May 12, 2007 at 10:58**
To: Eugene Higgins <psillc@comcast.net>
Bcc: sent@nic-out.com

Gene,
If you wire the deposit on Monday then we will try to make a reservation on the plane as soon as possible. After you wire a deposit, please send us the scanned copy of wire transfer.
Please, send the detailed shipping address even today. I would like to check the possibilities before you transfer money.

000006

Thanks,

Alex

From: Eugene Higgins [mailto:psillc@comcast.net]
Sent: Saturday, May 12, 2007 4:25 PM
[Quoted text hidden]

---

winmail.dat
0K

Eugene Higgins <psillc@comcast.net> **Sat, May 12, 2007 at 11:49**
To: Info Nic-Out <info@nic-out.com>

Alex
I don't have a broker. Do I need one?
My company info is below. I would like the shipment sent to Philadelphia, PA.
Best Gene

Product

Source International LLC

13 Coleman Rd. Berlin, NJ, 08009

Tel: (856) 753-8127 Fax: (856) 753-3713

HYPERLINK "mailto:Psillc@comcast.net"Psillc@comcast.net

---- Original Message ----
From: HYPERLINK "mailto:info@nic-out.com"Info Nic-Out
To: HYPERLINK "mailto:psillc@comcast.net"'Eugene Higgins'
[Quoted text hidden]

---

winmail.dat
0K

Eugene Higgins <psillc@comcast.net> **Sat, May 12, 2007 at 20:01**
To: Info Nic-Out <info@nic-out.com>

This message has been processed by Symantec's AntiVirus Technology.

Unknown00000000.data was not scanned for viruses because too many nested levels of files were found.

For more information on antivirus tips and technology, visit
http://ses.symantec.com/

No virus found in this incoming message.
Checked by AVG Free Edition.
Version: 7.5.467 / Virus Database: 269.7.0/801 - Release Date: 12.05.2007 18:40

000007

---

noname
78K

Eugene Higgins <psillc@comcast.net> **Mon, May 14, 2007 at 13:43**
To: info@nic-out.com

Alex
Thanks for the follow-up
I am leaving for the bank in 10 minutes.
You should recieve the wire today unless your bank does not process after hours like US banks do.
In which case you'll have it tomorrow
Best regards
Gene-PSI-LLC

---- Original Message ----
From: <info@nic-out.com>
To: "Eugene Higgins" <psillc@comcast.net>
Sent: Monday, May 14, 2007 1:32 PM
Subject: Re: Purchase order - PSI-LLC

> Hello Gene,
> Please inform me when you transfer the deposit in order to begin
> proceeding
> with your order.
>
> Thanks,
> Alex
>
>
>

No virus found in this incoming message.
Checked by AVG Free Edition.
Version: 7.5.467 / Virus Database: 269.7.0/803 - Release Date: 13.05.2007 12:17

Eugene Higgins <psillc@comcast.net> **Mon, May 14, 2007 at 21:47**
To: info@nic-out.com

Alex
I sent the wire this afternoon
However I did not have a necessary piece of information i.e. the name on the account
So I sent it under the Name of : P. Service/
If that is te name on the account you will have it this morning if not please let me know
what the name on the account actually is nd i will re-send the wire.
Best regards

000008

Gene - PSI-LLC

---- Original Message ----
From: <info@nic-out.com>
To: "Eugene Higgins" <psillc@comcast.net>
Sent: Monday, May 14, 2007 1:32 PM
Subject: Re: Purchase order - PSI-LLC

> Hello Gene,
> Please inform me when you transfer the deposit in order to begin
> proceeding
> with your order.
>
> Thanks,
> Alex
>
>
>

No virus found in this incoming message.
Checked by AVG Free Edition.
Version: 7.5.467 / Virus Database: 269.7.0/803 - Release Date: 13.05.2007 12:17

Info Nic-Out <info@nic-out.com> **Tue, May 15, 2007 at 09:56**
To: Eugene Higgins <psillc@comcast.net>

Hello Gene,
We did not see money on our bank account yet. Please send the scanned copy of wire to my email.

Thanks,
Alex

----Original Message-----
From: Eugene Higgins [mailto:psillc@comcast.net]
Sent: Tuesday, May 15, 2007 4:47 AM
To: info@nic-out.com
Subject: Re: Purchase order - PSI-LLC
Importance: High

[Quoted text hidden]

[Quoted text hidden]

000009

No virus found in this outgoing message.
Checked by AVG Free Edition.
Version: 7.5.467 / Virus Database: 269.7.0/804 - Release Date: 14.05.2007 16:46

Info Nic-Out <info@nic-out.com> **Wed, May 16, 2007 at 03:46**
To: Eugene Higgins <psillc@comcast.net>
Bcc: sent@nic-out.com

Hello Gene,
We received money and began to proceed with your order.

Thanks,
Alex

---Original Message---
From: Eugene Higgins [mailto:psillc@comcast.net]
Sent: Tuesday, May 15, 2007 4:47 AM
To: info@nic-out.com
Subject: Re: Purchase order - PSI-LLC
[Quoted text hidden]

No virus found in this outgoing message.
Checked by AVG Free Edition.
Version: 7.5.467 / Virus Database: 269.7.1/805 - Release Date: 15.05.2007 10:47

winmail.dat
0K

Alexander Slobidker <slobidker@yahoo.com> **Wed, May 16, 2007 at 03:55**
To: Eugene Higgins <psillc@comcast.net>
Bcc: sent@nic-out.com

Hello Gene,
The order will be sent to Philadelphia International Airport

Is that ok? Please contact me as soon as possible in order to confirm the shipping address.

Thanks,
Alex

From: Eugene Higgins [mailto:psillc@comcast.net]
Sent: Sunday, May 13, 2007 3:02 AM
To: Info Nic-Out
Subject: Re: Purchase order - PSI-LLC

Alex
The nearest port of entry is Philadelphia PA.
Use our address as the recipents address
Product Source International LLC

13 Coleman Rd. Berlin, NJ, 08009

000010

Tel: (856) 753-8127 Fax: (856) 753-3713
HYPERLINK
"mailto:Psillc@comcast.net"HYPERLINK
"mailto:Psillc@comcast.net"Psillc@comcast.net

Gmail by Google

Alex Slobidker <slobidker@gmail.com>

RE: Purchase order - PSI-LLC

1 message

Info Nic-Out <info@nic-out.com> **Wed, May 16, 2007 at 03:43**
To: Info Nic-Out <info@nic-out.com>
Bcc: sent@nic-out.com

Hello Gene,
We received money and began to proceed on your order.

Thanks,
Alex

----Original Message----
From: Info Nic-Out [mailto:info@nic-out.com]
Sent: Tuesday, May 15, 2007 4:57 PM
To: 'Eugene Higgins'
Subject: RE: Purchase order - PSI-LLC

Hello Gene,
We did not see money on our bank account yet. Please send the scanned copy of wire to my email.

Thanks,
Alex

----Original Message----
From: Eugene Higgins [mailto:psillc@comcast.net]
Sent: Tuesday, May 15, 2007 4:47 AM
To: info@nic-out.com
Subject: Re: Purchase order - PSI-LLC
Importance: High

Alex
I sent the wire this afternoon
However I did not have a necessary piece of information i.e. the name on the
account
So I sent it under the Name of : P. Service/
If that is te name on the account you will have it this morning if not
please let me know
what the name on the account actually is nd i will re-send the wire.
Best regards
Gene - PSI-LLC

000011

---- Original Message ----
From: <info@nic-out.com>
To: "Eugene Higgins" <psillc@comcast.net>
Sent: Monday, May 14, 2007 1:32 PM
Subject: Re: Purchase order - PSI-LLC

> Hello Gene,
> Please inform me when you transfer the deposit in order to begin
> proceeding
> with your order.
>
> Thanks,
> Alex
>
>
>

No virus found in this incoming message.
Checked by AVG Free Edition.
Version: 7.5.467 / Virus Database: 269.7.0/803 - Release Date: 13.05.2007 12:17

No virus found in this outgoing message.
Checked by AVG Free Edition.
Version: 7.5.467 / Virus Database: 269.7.0/804 - Release Date: 14.05.2007 16:46

No virus found in this outgoing message.
Checked by AVG Free Edition.
Version: 7.5.467 / Virus Database: 269.7.1/805 - Release Date: 15.05.2007 10:47

000012

Gmail by Google

Alex Slobidker <slobidker@gmail.com>

Address in Philadelphia

3 messages

Alexander Slobidker <slobidker@yahoo.com> **Wed, May 16, 2007 at 13:48**
To: leonid nahshin <kiev65@mail.ru>
Bcc: sent@nic-out.com, Info Nic-Out <info@nic-out.com>

Леня, привет!
Значит отправляем на Philadelphia International Airport

Данные компании:

Product Source International LLC
13 Coleman Rd. Berlin, NJ, 08009
USA
Tel: (856) 753-8127 Fax: (856) 753-3713

Саша

No virus found in this outgoing message.
Checked by AVG Free Edition.
Version: 7.5.467 / Virus Database: 269.7.1/805 - Release Date: 15.05.2007
10:47

winmail.dat
0K

Alexander Slobidker <slobidker@yahoo.com> **Wed, May 16, 2007 at 13:48**
To: leonid nahshin <kiev65@mail.ru>

[Quoted text hidden]

winmail.dat
0K

---

leonid nahshin <kiev65@mail.ru> **Mon, May 21, 2007 at 23:53**
Reply-To: leonid nahshin <kiev65@mail.ru>
To: Alexander Slobidker <slobidker@yahoo.com>

000013

Уважаемый Мистер XXXXX
Номер AWB 057 80309003.
Груз отправляется к вам ,через авиакомпанию АирФранс.
Извините за небольшую задержку. Это было связано с небольшими техническими проблемами.
Те компании,которые работают с нами на постояной основе имеет запас продукции своего дизайна.

Поэтому,при поступлении заказа ,мы отправляем груз в течении 48 часов.(при наличии места у авиаперевозчика).

Надеемся на дальнейшее сотрудничество.

No virus found in this incoming message.
Checked by AVG Free Edition.
Version: 7.5.467 / Virus Database: 269.7.6/814 - Release Date: 21.05.2007 14:01

000014

No virus found in this outgoing message.
Checked by AVG Free Edition.
[Quoted text hidden]

winmail.dat
0K

Eugene Higgins <psillc@comcast.net> **Fri, May 18, 2007 at 08:38**
To: Info Nic-Out <info@nic-out.com>, Alexander Slobidker <slobidker@yahoo.com>

This message has been processed by Symantec's AntiVirus Technology.

Unknown00000000.data was not scanned for viruses because too many nested levels of files were found.

For more information on antivirus tips and technology, visit
http://ses.symantec.com/

No virus found in this incoming message.
Checked by AVG Free Edition.
Version: 7.5.467 / Virus Database: 269.7.6/814 - Release Date: 21.05.2007 14:01

noname
90K

Eugene Higgins <psillc@comcast.net> **Fri, May 18, 2007 at 08:57**
To: Alexander Slobidker <slobidker@yahoo.com>, Info Nic-Out <info@nic-out.com>

[Quoted text hidden]

noname
91K

Eugene Higgins <psillc@comcast.net> **Mon, May 21, 2007 at 09:50**
To: Alexander Slobidker <slobidker@yahoo.com>, Info Nic-Out <info@nic-out.com>

[Quoted text hidden]

noname
95K

Info Nic-Out <info@nic-out.com> **Tue, May 22, 2007 at 03:09**
To: Eugene Higgins <psillc@comcast.net>
Bcc: sent@nic-out.com

Dear Gene,

000015

I very much apologize for such a delay for responding.
The number of your AWB is 057 80309003.
The cargo is going to you via airline AirFrans. The delay has been connected to small technical problems.
The companies that work with us have the stock of our product. Therefore, upon receipt of the order, we send a cargo during 48 hours. (at presence of a place at the air carrier). We hope for the further cooperation.

Thanks,
Alex

---Original Message---
From: Eugene Higgins [mailto:psillc@comcast.net]
Sent: Monday, May 21, 2007 4:51 PM
To: Alexander Slobidker; Info Nic-Out
Subject: Re: Purchase order - PSI-LLC
Importance: High

This message has been processed by Symantec's AntiVirus Technology.

Unknown00000000.data was not scanned for viruses because too many nested levels of files were found.

For more information on antivirus tips and technology, visit
http://ses.symantec.com/

No virus found in this incoming message.
Checked by AVG Free Edition.
Version: 7.5.467 / Virus Database: 269.7.6/814 - Release Date: 21.05.2007 14:01

No virus found in this outgoing message.
[Quoted text hidden]

winmail.dat
0K

000016

057-8030 9003 057-8030 9003

ATAS TUKETIM MALLARI ITRIYAT PAZ.SAN.
VE TIC.LTD.STI. CUMHURITEY CAD.SEHIT ER
CENGIZ KARICIOGLU NO:3 KAT:2 KAVACIK/ISTANBUL
TURKEY TEL:02164258955 P.SERVICE.ISRAEL IS THE
EXCLUSIVE PROPRIETOR OF NIC-OUT CIGARETTE FILTERS.

AIR FRANCE

PRODUCT SOURCE INTERNATIONAL LLC
3847-99 ST. 13 COLEMAN RD.
BERLIN ,NJ,08009 USA
TEL:+(1)856 753-8127
FAX:+(1)856 753-3713

JAS FORVARDERLIK LTD.STI.
ISTANBUL

FREIGHT PREPAID

07/05/310/00564

88-4-7154-0010

ATATURK AIRPORT

PHL	AIR FRANCE		EUR	PP	X	X	N.V.D. N.V.C.
PHILADELPHIA INTERNATIONA	AF 7031-29/05/07			XXX			

21	599.00 K	Q	599.00	2.55	1,527.45	DIMS: 21/38x47x58

NIC-OUT PLASTIC CIGARETTE
HOLDER WITH FILTERING INSERT

21	599.00				1,527.45		
	1,527.45			FSC: EUR	329.45	AWA: EUR	40.00
				MOC: EUR	40.00	SCC: EUR	89.85
	40.00						
	459.30						
	2,026.75						

000017

JAS FORVARDERLIK LTD.STI.

21/05/2007 ISTANBUL SAFAK AYDIN

057-8030 9003 057-8030 9003

ATAS TUKETIM MALLARI ITRIYAT PAZ.SAN.
VE TIC.LTD.STI. CUMHURITEY CAD.SEHIT ER
CENGIZ KARICIOGLU NO:3 KAT:2 KAVACIK/ISTANBUL
TURKEY TEL:02164258955 P.SERVICE.ISRAEL IS THE
EXCLUSIVE PROPRIETOR OF NIC-OUT CIGARETTE FILTERS.

AIR FRANCE

PRODUCT SOURCE INTERNATIONAL LLC
3847-99 ST. 13 COLEMAN RD.
BERLIN ,NJ,08009 USA
TEL:+(1)856 753-8127
FAX:+(1)856 753-3713

JAS FORVARDERLIK LTD.STI.
ISTANBUL

FREIGHT PREPAID

07/05/310/00564

88-4-7154-0010

ATATURK AIRPORT

PRL	AIR FRANCE		EUR	PP	X	X	N.V.D.	N.V.C.
PHILADELPHIA INTERNATIONA	AF 7031-29/05/07			XXX				

21	599.00 K	Q	599.00	2.55	1,527.45	DIMS: 21/38x47x58

NIC-OUT PLASTIC CIGARETTE
HOLDER WITH FILTERING INSERT

21	599.00				1,527.45	

1,527.45

FSC: EUR 329.45 ANA: EUR 40.00
HOC: EUR 40.00 SCC: EUR 89.85

40.00

459.30

000018

JAS FORVARDERLIK LTD.STI.

2,026.75

21/05/2007 ISTANBUL SAFAK AYDIN

057-8031-7532 057-8031-7532

Not Negotiable

Air Waybill

Issued by

AIR FRANCE

Copies 1, 2 and 3 of this Air Waybill are originals and have the same validity

Shipper's Name and Address

ATAS TUKETIM MALLARI ITRIYAT
PAZ. SAN. VE TIC. LTD STI
CUMHURIYET CAD.SEHIT ER CENGIZ
KARCIOGLU SK.NO:4 KAVACIK
34810 BEYKOZ/ISTANBUL

Shipper's Account Number

P.SERVICE.Israel is the exclusive proprietor
of NIC-OUT cigarette filters.

PRODUCT SOURCE INTERNATIONAL LLC.
3847-99 ST. 13 COLEMAN RD.
BERLIN, NJ 08009

It is agreed that the goods described herein are accepted in apparent good order and condition (except as noted) for carriage SUBJECT TO THE CONDITIONS OF CONTRACT ON THE REVERSE HEREOF. ALL GOODS MAY BE CARRIED BY ANY OTHER MEANS INCLUDING ROAD OR ANY OTHER CARRIER UNLESS SPECIFIC CONTRARY INSTRUCTIONS ARE GIVEN HEREON BY THE SHIPPER, AND SHIPPER AGREES THAT THE SHIPMENT MAY BE CARRIED VIA INTERMEDIATE STOPPING PLACES WHICH THE CARRIER DEEMS APPROPRIATE. THE SHIPPER'S ATTENTION IS DRAWN TO THE NOTICE CONCERNING CARRIER'S LIMITATION OF LIABILITY. Shipper may increase such limitation of liability by declaring a higher value for carriage and paying a supplemental charge if required.

Issuing Carrier's Agent Name and City

PHILADELPHIA / U.S.A.
TEL : 00 1 856753-8127
FAX : 00 1 856753-3713

Accounting Information

Agent's IATA Code
JAS FORVARDERLIK LTD.STI.
ISTANBUL

Account No.

Airport of Departure (Addr. of First Carrier) and Requested Routing

PREIGHT-PREPAID

Reference Number

07/08/310/00925

Optional Shipping Information

To	By First Carrier	Routing and Destination	To	By	To	By	Currency	CHGS Code	WT/VAL PPD	WT/VAL COLL	Other PPD	Other COLL	Declared Value for Carriage	Declared Value for Customs
88-4-7154-0010														

Airport of Destination

ATATURK AIRPORT

Requested Flight/Date

Amount of Insurance

INSURANCE - If Carrier offers insurance, and such insurance is requested in accordance with the conditions thereof, indicate amount to be insured in figures in box marked "Amount of Insurance"

Handling Information

PHL AIR FRANCE

EUR PP X X N.V.D. N.V.C.

PHILADELPHIA INTERNATIONA AF7031-14/08/07 XXX

SCI

No of Pieces RCP	Gross Weight	kg lb	Rate Class / Commodity Item No.	Chargeable Weight	Rate / Charge	Total	Nature and Quantity of Goods (incl. Dimensions or Volume)
25	713.00	K	Q	713.00	2.55	1,818.15	DIMS: 25/38x47x58 NIC-OUT PLASTIC CIGARETTE HOLDER WITH FILTERING INSERT

NTFY-1: IMPORT BROKER/BILL RIDDLE AT: CARSON M SIMON CO INC.
221 CHAESTNUT ST.SUITE 300 PHILADELPHIA PA. 19106
TEL:215-925-6006 EXT.226 FAX: 215-925-3022

Prepaid	Weight Charge	Collect
25	713.00 Valuation Charge	
1,818.15	Tax	
Total Other Charges Due Agent		
Total Other Charges Due Carrier		
40.00		
Total Prepaid 567.62	Total Collect	
Currency Conversion Rates	CC Charges in Dest. Currency	
2,425.77	Charges at Destination	Total collect Charges
For Carrier's Use only at Destination		06/08/2007

Other Charges

1,818.15

FSC: EUR 427.80 AWA: EUR 40.00
MOC: EUR 40.00 SCC: EUR 99.82

Shipper certifies that the particulars on the face hereof are correct and that insofar as any part of the consignment contains dangerous goods, such part is properly described by name and is in proper condition for carriage by air according to the applicable Dangerous Goods Regulations

000019

Signature of Shipper or his Agent

JAS FORVARDERLIK LTD.STI.

Executed on (date) at (place) Signature of Issuing Carrier or its Agent

ISTANBUL SAFAK AYDIN

ORIGINAL 3 (FOR SHIPPER) 057-8031 7532 W0

DRAFT

Shipper's Name and Address | Shipper's Account Number

Not Negotiable

Air Waybill

Issued by

Copies 1, 2 and 3 of this Air Waybill are originals and have the same validity

Consignee's Name and Address | Consignee's Account Number

It is agreed that the goods described herein are accepted in apparent good order and condition (except as noted) for carriage SUBJECT TO THE CONDITIONS OF CONTRACT ON THE REVERSE HEREOF. ALL GOODS MAY BE CARRIED BY ANY OTHER MEANS INCLUDING ROAD OR ANY OTHER CARRIER UNLESS SPECIFIC CONTRARY INSTRUCTIONS ARE GIVEN HEREON BY THE SHIPPER, AND SHIPPER AGREES THAT THE SHIPMENT MAY BE CARRIED VIA INTERMEDIATE STOPPING PLACES WHICH THE CARRIER DEEMS APPROPRIATE. THE SHIPPER'S ATTENTION IS DRAWN TO THE NOTICE CONCERNING CARRIER'S LIMITATION OF LIABILITY. Shipper may increase such limitation of liability by declaring a higher value for carriage and paying a supplemental charge if required.

Issuing Carrier's Agent Name and City

Accounting Information

Agent's IATA Code | Account No.

Airport of Departure (Addr. of First Carrier) and Requested Routing

Reference Number | Optional Shipping Information

To	By First Carrier	Routing and Destination	To	By	To	By	Currency	CHGS Code	WT/VAL PPD	WT/VAL COLL	Other PPD	Other COLL	Declared Value for Carriage	Declared Value for Customs

Airport of Destination | Requested Flight/Date

Amount of Insurance | INSURANCE – If Carrier offers insurance and such insurance is requested in accordance with the conditions thereof, indicate amount to be insured in figures in box marked "Amount of Insurance".

Handling Information

SCI

No of Pieces RCP	Gross Weight	kg lb	Rate Class / Commodity Item No.	Chargeable Weight	Rate / Charge	Total	Nature and Quantity of Goods (incl. Dimensions or Volume)

Prepaid	Weight Charge	Collect	Other Charges
Valuation Charge			
Tax			
Total Other Charges Due Agent			Shipper certifies that the particulars on the face hereof are correct and that insofar as any part of the consignment contains dangerous goods, such part is properly described by name and is in proper condition for carriage by air according to the applicable Dangerous Goods Regulations
Total Other Charges Due Carrier			000020
			Signature of Shipper or his Agent
Total Prepaid	Total Collect		
Currency Conversion Rates	CC Charges in Dest. Currency		Executed on (date) at (place) Signature of Issuing Carrier or its Agent
For Carrier's Use only at Destination	Charges at Destination	Total collect Charges	

ORIGINAL 3 (FOR SHIPPER)

DRAFT

406-2078-6592 406-2078-6592

Not Negotiable

Air Waybill

Issued by

UPS AIR CARGO

Copies 1, 2 and 3 of this Air Waybill are originals and have the same validity

It is agreed that the goods described herein are accepted in apparent good order and condition (except as noted) for carriage SUBJECT TO THE CONDITIONS OF CONTRACT ON THE REVERSE HEREOF. ALL GOODS MAY BE CARRIED BY ANY OTHER MEANS INCLUDING ROAD OR ANY OTHER CARRIER UNLESS SPECIFIC CONTRARY INSTRUCTIONS ARE GIVEN HEREON BY THE SHIPPER, AND SHIPPER AGREES THAT THE SHIPMENT MAY BE CARRIED VIA INTERMEDIATE STOPPING PLACES WHICH THE CARRIER DEEMS APPROPRIATE. THE SHIPPER'S ATTENTION IS DRAWN TO THE NOTICE CONCERNING CARRIER'S LIMITATION OF LIABILITY. Shipper may increase such limitation of liability by declaring a higher value for carriage and paying a supplemental charge if required.

Shipper's Name, Address

ATAS TUKETIM MALLARI ITRIYAT PAZARLAMA
SAN.VE TIC.STI.CUMHURIYET CAD.SEHIT ER
CENGIZ KARCIOGLU SK.NO:4 KAVACIK,BEYKOZ 34810
ISTANBUL P.SERVICE.ISRAEL IS THE EXCLUSIVE
PROPRIETOR OF NIC-OUT CIGARETTE FILTERS

Shipper's Account Number

Consignee's Name, Address

PRODUCT SOURCE INTERNATIONAL LLC.
3847-99 ST. 13 COLEMAN RD.BERLIN,
NJ, 08009 USA
TEL:+(1)856 753-8127
FAX:+(1)856 753-3713

Consignee's Account Number

Issuing Carrier's Agent Name and City

JAS FORVARDERLIK LTD.STI.
ISTANBUL

Accounting Information

FREIGHT PREPAID

07/11/310/01384

Agent's IATA Code

88-4-7154-0010

Account No.

Airport of Departure (Addr. of First Carrier) and Requested Routing

ATATURK AIRPORT

To	By First Carrier	Routing and Destination	To	By	To	By
PHL	UPS-AIR-CARGO					

Airport of Destination

PHILADELPHIA INTERNATIONA

Requested Flight/Date

UP122-26/11/07

Reference Number

Optional Shipping Information

Currency	CHGS Code	WT/VAL PPD	WT/VAL COLL	Other PPD	Other COLL	Declared Value for Carriage	Declared Value for Customs
EUR	PP	X		X		N.V.D.	N.V.C.

Amount of Insurance

XXX

INSURANCE - If Carrier offers insurance, and such insurance is requested in accordance with the conditions thereof, indicate amount to be insured in figures in box marked "Amount of Insurance".

Handling Information

SCI

No of Pieces RCP	Gross Weight	kg lb	Rate Class / Commodity Item No.	Chargeable Weight	Rate / Charge	Total	Nature and Quantity of Goods (incl. Dimensions or Volume)
50	1,425.00	K	Q	1,425.00	2.55	3,633.75	DIMS: 50/38x47x58 NIC-OUT PLASTIC CIGARETTE HOLDER WITH FILTERING INSERT
50	1,425.00					3,633.75	

Prepaid: 3,633.75 | Weight Charge | Collect

Valuation Charge

Tax

Total Other Charges Due Agent: 40.00

Total Other Charges Due Carrier: 1,037.50

Other Charges

FSC: EUR 997.50 AWA: EUR 40.00
MOC: EUR 40.00

Shipper certifies that the particulars on the face hereof are correct and that insofar as any part of the consignment contains dangerous goods, such part is properly described by name and is in proper condition for carriage by air according to the applicable Dangerous Goods Regulations

000021

JAS FORVARDERLIK LTD.STI.

Signature of Shipper or his Agent

Total Prepaid: 4,711.25

Total Collect

Currency Conversion Rates

CC Charges in Dest. Currency

Executed on (date) at (place) Signature of Issuing Carrier or its Agent

23/11/2007 ISTANBUL SAFAK AYDIN

For Carrier's Use only at Destination

Charges at Destination

Total collect Charges

W1 406-2078-6592 W0

ORIGINAL 3 (FOR SHIPPER)

Gmail by Google

Alex Slobidker <slobidker@gmail.com>

i wanted you to know

Christine Gilliar <pm_christine@msn.com> **Mon, Jan 30, 2006 at 18:28**
To: sales@nic-out.com

I PURCHASED THIS PRODUCT THOUGH A MAGAZINE AND I HAVE BEEN USING IT SINCE SAT. I KNOW I PROBABLY WILL NEVER QUIT SO, SO FAR THIS IS THE BEST PRODUCT I CAN USE AND I WILL BE ORDERING MORE THOUGH YOU AND HOPEFULLY GET MY DAD ON IT AND ANYONE I RUN INTO THAT WANTS TO QUIT BUT CAN'T... SO THANK YOU!!! CRHISTINE
pm_christine@msn.com

000022

Gmail by Google

Alex Slobidker <slobidker@gmail.com>

it works

Buddymypuppy2005@aol.com <Buddymypuppy2005@aol.com> **Mon, Feb 27, 2006 at 11:52**
To: sales@nic-out.com

I just wanted to let you know my husband and I have been using nic-out for 4 weeks now and it has made a big difference in our smoking habits. Thank you for putting this product on the market.

Dianne Wetzel

buddymypuppy2005@aol.com

000023

Gmail by Google

Alex Slobidker <slobidker@gmail.com>

NIC - OUT filters

Eva B. <evabelyea@rogers.com> Mon, Jun 19, 2006 at 17:33
To: sales@nic-out.com

Dear Sirs:

Just wanted to let you know how pleased I am with your product. I am on my second box of filters. I am smoking less, and feeling better. My smokers cough is minimal now. I have been a pack a day smoker for 38 years.

EVA BP.

000024

Gmail by Google

Alex Slobidker <slobidker@gmail.com>

RE: MAIL ORDER?

DJ LEE <DJL85@webtv.net> **Sun, Oct 22, 2006 at 09:41**
To: sales@nic-out.com

Is it possible to order by
mail?
I have found the nic-out
really does help my breath-
ing, and I do enjoy smoking
and have for over 50 yrs. but
the Dr. tells me YOU GOT TO
QUIT. Now that I have used
NIC-OUT I don't think so. Do
hope I can order by mail.
Hope to ear from you soon..
Thanks for reading this...
DJ Lee

000025

Gmail by Google

Alex Slobidker <slobidker@gmail.com>

(no subject)

1 message

edward loewe <eelow@charter.net> Fri, Oct 27, 2006 at 22:02
To: Sales Nic-Out <sales@nic-out.com>

I recently purchased a large quantity of Nic-out filters as a gift for a close friend, and took note on your home page of your wish to find representatives in the United States. I am writing for two reasons: 1) I believe your product should be a born winner; and 2) I have considered funding a business enterprise for my daughter and son-in-law.

My own history is that of a successful, two career, PhD professional - formerly the CEO of a sizable organization that carried my name. I am retired, and have the time and resources to undertake whatever interests me. As it happens, I also have relatives in Israel.

If you care to have an exchange of information, you may contact me at the e-mail address this message carries, and you may also write to me at 17 Inglewood Rd., Asheville, NC, 28804. Should you proceed, an early detailing of your expectations, including how you envision the running of the enterprise, will be appreciated, as this will save each of us time in deciding whether there is basis for mutual interest.

Thank-you, and best wishes,

Ed
(Edward E. Loewe, PhD)

000026

Many thanks for your attention to our product.

We really search decent and reliable partners on USA area.
We receive various offers, but your letter makes impression of the serious and decent person. In addition, your communications with Israel very much imposes us and serves us as the additional, extremely positive factor.

If you have specific proposals, we shall be glad to discuss them.

Yours sincerely,
Alex
Sales Manager
Nic-Out (Israel)

----- Original Message ----
From: edward loewe <eelow@charter.net>
To: Sales Nic-Out <sales@nic-out.com>
Sent: Saturday, October 28, 2006 4:02:47 AM
Subject:

I recently purchased a large quantity of Nic-out filters as a gift for a close friend, and took note on your home page of your wish to find representatives in the United States. I am writing for two reasons: 1) I believe your product should be a born winner; and 2) I have considered funding a business enterprise for my daughter and son-in-law.

My own history is that of a successful, two career, PhD professional - formerly the CEO of a sizable organization that carried my name. I am retired, and have the time and resources to undertake whatever interests me. As it happens, I also have relatives in Israel.

If you care to have an exchange of information, you may contact me at the e-mail address this message carries, and you may also write to me at 17 Inglewood Rd., Asheville, NC, 28804. Should you proceed, an early detailing of your expectations, including how you envision the running of the enterprise, will be appreciated, as this will save each of us time in deciding whether there is basis for mutual interest.

Thank-you, and best wishes,

Ed
(Edward E. Loewe, PhD)

000027

Gmail by Google

Alex Slobidker <slobidker@gmail.com>

Re: Re:

1 message

edward loewe <eelow@charter.net> **Mon, Oct 30, 2006 at 09:50**
To: Sales Nic-Out <sales@nic-out.com>

Hello, Alex,

I do not have a "specific proposal." This is partly so because although I feel great enthusiasm for your product, I know nothing about your company, how you are staffed, and what your plans are for distribution in the United States. Usually a company with a new product has a plan for marketing it, and someone who wishes to become associated with the company must know whether he/she is able to work within the framework of this plan.

I have seen the with my own eyes the result of my friend using the filters, wherein the collection of tar products is obvious. Given that about 20% of all smokers are unable to stop smoking, the market for your product should be phenomenal in any developed country. So, and I have seldom had this reaction, here is a product that seems to me to be assured of success. Now, I have enough money myself, so that making money has for many years already been only a companion goal for me to doing something which helps people. Your product can help many millions.

Just a little background. My history is that of 1.) 22 years as an architect who had one of the larger firms in the United States; 2.) a clinical psychologist who saw patients for 16 years; 3.) a developer of large building projects; and 4.) an author with two published books - the latest came out this year. My relatives in Israel are Yarri and Nurit Menahim (Harazim) - Yarri is a worldwide known economist. Meanwhile, I have relatives in England and Germany.

Anything I undertake, I look at very carefully. I like new experiences, but do not need them. I like to do something good, but do not wish to become involved with something someone else can do much better (maybe an "venture capital" organization putting money into your company is better for you than someone such as myself). I don't like to waste someone else's time, and certainly not my own. If I decide to do something, it is done carefully, and with every necessary effort. If I need consultants, I hire them.

You know, we are exploring here. I would have to know more about you, your people, your manufacturing and shipping capabilities, and the background of your whole effort. And of course, I am telling you some preliminary things here about me, so you can already make some early judgments. To begin to know such things is the only way to have confidence, and to decide "yes," or "no."

Let me stop here for now, and allow you to react.

Bets wishes,

Ed

> —— Original Message ——
> **From:** Sales Nic-Out
> **To:** edward loewe
> **Sent:** Sunday, October 29, 2006 7:02 AM
> **Subject:** Re:
>
> Dear Ed,

000028

Gmail by Google

Alex Slobidker <slobidker@gmail.com>

(no subject)

edward loewe <eelow@charter.net> Thu, Nov 2, 2006 at 14:55
To: Sales Nic-Out <sales@nic-out.com>

Alex,

Perhaps, if you have a moment to spare, you can answer the following question. It interests me partly because I am about to purchase additional large quamtities of filters for friends.

The person I initially gave a gift of the nic-out filters is very happy with them. However, she does report that she now smokes a full cigarette, instead of the half ones she smoked while trying to reduce smoking without the use of a filter. I thought first that, psychologically, she might believe that with the filtering of the smoke she could allow herself more enjoyment than occurs with smoking half cigarettes. But, she insists this is not the case, and that she smokes a whole one with the filter now, because the cigarette burns twice as fast when using the filter. Is your company aware of this dynamic....that the filter causes the cigarette to burn faster?

Thanks,

Ed Loewe

000029

1100 Raymond Boulevard
Newark, NJ 07102

U.S. Customs and Border Protection

ENF:-4-02 AD: N/NY: FPF AC
CN: 2009-4601-001008-01

East Coast Traders
1 Entin Road, 7B
Clifton, New Jersey 07014

AUG 19 2009

Dear Sir or Madam:

This is to officially notify you that the U.S. Customs and Border Protection seized the following merchandise described below at Newark, NJ on August 5, 2009:

420 ea. Counterfeit "Nic-Out" cigarette filters and 900 ea. Non-IPR "Super Stop" cigarette filters domestically valued at $635.00

The counterfeit merchandise was seized and is subject to forfeiture under the provisions of Title 19, United States Code, section 1526(e) and Title 19, Code of Federal Regulations, section 133 because this merchandise is a counterfeit/unlicensed version of the trademark protected products which are registered with the United States Government. The non-IPR merchandise was seized and is subject to forfeiture under the provision of Title 19, United States Code, section 1595a(a) for facilitating the illegal importation or attempted importation of the counterfeit merchandise.

Unless we receive from the trademark owner(s), within 30 days from the date of this letter, written consent to the importation, exportation, entry after obliteration, or other appropriate disposition of the articles, or a petition for relief as described below, the merchandise will be forfeited and disposed of in accordance with title 19, Code of Federal Regulations, section 133.52.

Under the provisions of title 19, United States Code, section 1618, and section 171.12(b) of the Customs Regulations (19 CFR 171.12(b)), you may petition for relief from the above liability within 30 days from the date of this letter. The petition need not be in any specific form, but it should include all the facts, which you believe warrant relief from forfeiture. All petitions should be filed in duplicate and addressed to U.S. Customs and Border Protection, Attn: FP&F Office, 1100 Raymond Blvd., 5th Floor, Newark, NJ 07102.

All correspondence must include the above-referenced seizure case number. You may assent to an administrative forfeiture of the property by checking the second box, signing and returning the enclosed Election of Proceedings Form in which case this office will

dispose of the property without further action. The enclosed Notice of Seizure explains your options with regard to the remission of the forfeiture and possible return to you of the seized property.

If you decide to petition for relief, you must check the first box on the enclosed Election of Proceeding/Waiver form indicating that you wish this office to consider your petition administratively. Checking the second box indicates that you desire Customs to begin appropriate forfeiture proceedings. No matter which box you check, you must also sign and return the form.

If you have any further questions regarding this matter, please contact Ms. Anita Czajkowski of my staff at (973) 368-6076. Our fax number is (973) 368-6082. Please be advised that this office cannot telephone internationally.

Sincerely,

Edward P. Nagle
Director
Office of Fines Penalties and Forfeitures
Newark/New York Area

Encl.: AF-30

Cigarette Filter for Smokers

THE BEST LIFE-SAVING GIFT FOR SMOKING LOVED ONES

Nic-Out

LOW NICOTINE - MORE TASTE

Nic-Out!

90% of tar is extracted

nicotine is lowered 5 times

THE BEST LIFE-SAVING GIFT
FOR SMOKING LOVED ONES

- Home
- Product
- Wholesale
- Store
- FAQ
- Contact us

For orders in Israel:
Для заказов в Израиле:
להזמנות בישראל:
0522762679

Magic Safety Invention

According to the American Heart Association, each year smoking accounts for about **5 million deaths worldwide.** Even with these grim statistics, many people are unable or unwilling to quit. But they are willing to accept responsibility for their health. It is always safer to quit smoking. But what if this habit is stronger than your natural survival instinct?! Fortunately, there is an alternative that may help a smoker enjoy Better Health and Longer Life.
Now smokers can take **Special Cigarette Filter Nic-Out,** developed by scientists, to help reduce nicotine, tar and thus the health risks associated with smoking.

View the Analysis

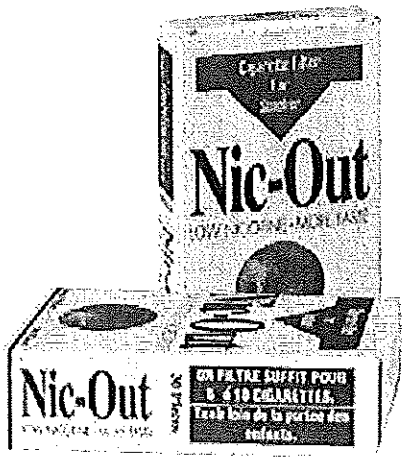

TO QUIT OR NOT TO QUIT?

Analysis| Services| Link to us

Copyright 2002 (c) P. Service All right reserved. Privacy Policy.

000032

Cigarette Filter for Smokers

THE BEST LIFE-SAVING GIFT FOR SMOKING LOVED ONES

Nic-Out
LOW NICOTINE - MORE TASTE

Nic-Out Filter

This small and simple device provides intensive, multistage cigarette smoke purification: 90% of the tar is extracted; the content of Nicotine is lowered 5 times!

The filter is made of transparent class-A plastic. The same kind of plastic, which is used for production of baby food bottles.

A smoker does not detect any changes in the taste of the cigarette since the method used is mechanical smoke purification.

The short length of the filter provides no change in the smoke's temperature, which is an important comfort consideration for most smokers.

The immediate results of using the tiny device is the **disappearance of the tormenting "morning cough"** - usually a consequence of smoking over 15 cigarettes per day. After 2 weeks of using this filter the smokers are completely rid of the "morning cough"

- Home
- Product
- Wholesale
- Store
- FAQ
- Contact us

For orders in Israel:
Для заказов в Израиле:
להזמנות בישראל:
0522762679

After one cigarette	After three cigarettes

One Filter is good for 5 Cigarettes, one pack contains 30 filters.
This product is invaluable for each and every smoker.
The most convincing illustration of this fact is the drastic color change of the bright yellow insert with each consumed cigarette.

Keep your lungs safe - use Nic-Out!
This product is the best life-saving gift for your smoking loved ones.

ECigarete Official STUDY
Do Not Buy ECigs Until Read This Report
You'll Be Shocked What Found

The HOTTEST Vapor Deals
Free Shipping within 24 hours Starter Kits
start at $12.99

Copyright 2002 (c) P. Service All right reserved. Privacy Policy.

000033

Cigarette Filter for Smokers

THE BEST LIFE-SAVING GIFT FOR SMOKING LOVED ONES

Nic-Out
LOW NICOTINE - MORE TASTE

Become a distributor

We are constantly looking for new distributors of our Nic-Out product in different countries (except Canada). Our product ensures good profits for distributors.

With negotiable order quantity and very promt delivery to any country we enable you to start from small quantity and develop your client base.

We provide full marketing support and promotion materials.

Please contact us if you are interested in Distribution Nic-Out filters in your country.

- Home
- Product
- Wholesale
- Store
- FAQ
- Contact us

Contact us

ECigarete Official STUDY
Do Not Buy ECigs Until Read This Report
You'll Be Shocked What Found

The HOTTEST Vapor Deals
Free Shipping within 24 hours Starter Kits
start at $12.99

For orders in Israel:
Для заказов в Израиле:
להזמנות בישראל:
0522762679

Copyright 2002 (c) P. Service All right reserved. Privacy Policy.

000034

Cigarette Filter for Smokers

THE BEST LIFE-SAVING GIFT FOR SMOKING LOVED ONES

Nic-Out
LOW NICOTINE · MORE TASTE

Listing of all products

- Home
- Product
- Wholesale
- Store
- FAQ
- Contact us

For orders in Israel:
Для заказов в Израиле:
להזמנות בישראל:
0522762679

Nic-Out 10 Packs
(10 packs)
$29.99 ~~$39.90~~
Save 26%

FREE SHIPPING

PayPal BUY NOW

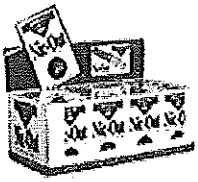

Nic-Out One Carton
(20 packs)
$58.99 ~~$82.80~~
Save 28%

FREE SHIPPING

PayPal BUY NOW

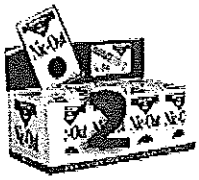

Nic-Out 2 Cartons
(40 packs)
$89.99 ~~$159.60~~
Save 44%

FREE SHIPPING

PayPal BUY NOW

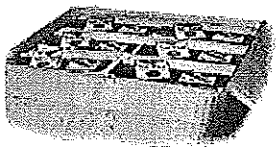

Nic-Out Master-Case
(36 cartons)
$1,259.99 ~~$2,051.00~~
Save 38%

FREE SHIPPING

PayPal BUY NOW

Nic-Out.com Safe Shopping Guarantee & Shipping Terms

▶ Learn More

Analysis| Services| Link to us

Copyright 2002 (c) P. Service All right reserved. Privacy Policy.

000035

Cigarette Filter for Smokers

THE BEST LIFE-SAVING GIFT FOR SMOKING LOVED ONES

Nic-Out
LOW NICOTINE - MORE TASTE

Frequently Asked Questions

- Home
- Product
- Wholesale
- Store
- FAQ
- Contact us

For orders in Israel:
Для заказов в Израиле:
להזמנות בישראל:
0522762679

000036

- What is Nic-Out?
- How does Nic-Out work?
- Where and how is it made?
- What are the advantages of Nic-Out?
- Does Nic-Out come in one size or can I get it for slim cigarettes?
- What is the Packing of Nic-Out?
- Who is the owner of the Nic-Out Filters?
- How many Cigarettes could be used with one Nic-Out filter?
- What is the Tar?
- Is it harmless to use the Nic-Out Filter?
- How does Nic-Out impact smoking habit?
- What is a proof of Nic-Out effectiveness?
- What is the role of regular filter at the tip of a cigarette?
- Who are the users of Nic-Out Filters?
- How much does Nic-Out cost?
- Is it secure to use credit card for payment at your site?
- Can I become a Nic-Out distributor?
- Is there any competition to Nic-Out at the current market?
- What are the recommendations about quantity of my purchase?
- If I-m not satisfied with the results from Nic-Out, can I get a refund?
- Refund Policy
- Privacy
- Shipping Time
- International Shipping
- Usage By Minors
- Freight Damag
- Payment Methods

000037

Q What is Nic-Out?

A It is a high performance health product. Disposable Cigarette Filter in the form of cigarette holder makes smoking safer or enables smoker to quit easier, if this option should have been chosen. It therefore allows individuals to secure their health for the lowest cost. Our Company is proud to offer you this revolutionary product, which could bring the answer to one of the bitterest modern problems, and prove as solution for a Healthier Nation.

Top

Q How does Nic-Out work?

A The Nic-Out is a cigarette holder with mechanical filtering insert, which selectively absorbs from the smoke large molecules of the tar and other toxic and carcinogenic poly-nuclear aromatic compounds. The principle of action of the Nic-Out filter is based on the laws of behavior of gases in the jet engine and it was developed in a framework of space technologies. This mechanical device permits most low molecular weight species to pass through, although relatively lowering the amount of inhaled nicotine and thus diminishing cravings in those who want to quit.

Top

Q Where and how is it made?

A Nic-Out filters for cigarette smoke cleansing are the Israeli development of 1999 (Patent Claim No. 151387). Overseas production facility supplies the filters made of plastic, designed and built to Nic-Out specifications. Our raw material is the same Grade-A plastic as commonly used for production of baby food bottles. The technology underlying the Nic-Out is patented in European Community and bears the Trade Mark registered in the United States.

Top

Q What are the advantages of Nic-Out?

A Scientific and practical knowledge show that Nic-Out works effectively. It is made from transparent plastic and makes visible concentration of collected tar. This provides important psychological effect in order to build negative image of smoking consequences and to prevent further ruining of public health. Reduction of tar in cigarette smoke has also certain "cosmetic" action. The filter protects dental enamel from penetration of sticky tar, cease formation of a dental strike and helps to keep your smile snow-white. The immediate results of using the tiny device is the disappearance of the tormenting "morning cough" - usually a consequence of smoking over 15 cigarettes per day. After 2 weeks of using this filter the smokers are completely rid of the "morning cough"

Top

Q Does Nic-Out come in one size or can I get it for slim cigarettes?

A Sorry, we are just planning to start production of the Nic-Out Filter for non-regular size cigarettes.

Top

Q What is the Packing of Nic-Out?

A This product is made of molded plastic in a form of Cigarette Holder and packaged in a convenient cigarette-type box of thirty (30) translucent Nic-Out filters per pack. There are 20 (twenty) packs in a carton and 36 cartons in a master case (total 720 packs).

Top

Q Who is the owner of the Nic-Out Filters?

A Our Company (P.Service) is the exclusive proprietor of NIC-OUT cigarette filters. Currently major activities of the Company are concentrated on the goal of development healthier environment based on the most updated technologies and logistics.

Top

000038

Q How many Cigarettes could be used with one Nic-Out filter?

A Each Nic-Out filter is reusable and can be utilized with multiple cigarettes v usually 5 to 10 - until it completely filled up with the Tar.

Top

Q What is the Tar?

A The tar is staining liquid that forms from burning cigarettes and known as carcinogen. When it is inhaled, the human body cells are in danger. You would be shocked to see how much of poison trapped in Nic-Out filter instead of your lungs with each cigarette.

Top

Q Is it harmless to use the Nic-Out Filter?

A The plastic, which Nic-Out filters made of is the same kind as used in production of baby-food bottles. So, naturally, it is harmless to health, nontoxic and causes no allergy. Each Nic-Out filter is reusable and can be utilized with multiple cigarettes. It traps most of tar and some nicotine from the smoke. The transparent walls of the holder make it visible and very convincing.

Top

Q How does Nic-Out impact smoking habit?

A People begin smoking cigarettes for a variety of reasons. Smoking has been portrayed as being heroic, cool and as enhancing sexual appeal. For some people, smoking also serves to soothe tension, anxiety, or loneliness. However, as is commonly known, cigarette smoke contains the addictive compound nicotine. Addiction to nicotine makes it very difficult for smokers to stop smoking cigarettes, even though many realize that smoking will adversely affect their health. The Nic-Out Filter is provided a method of making not just a safer smoking, but it creates the most adequate conditions for the smoker to start quitting. The lower level of Nicotine inhaled while using the Nic-Out lowers the cravings effect.

Top

Q What is a proof of Nic-Out effectiveness?

A The most convincing result of Nic-Out utilization is relief of tormenting morning cough, experienced by the most aggressive smokers. No irritation in the lungs v no cough, since Nic-Out takes the tar out of smoke. It is so obvious, when the black substance is gradually collected after each cigarette and visualized through transparent walls of cigarette holder. Nic-Out Filter is extracting up to 90% of the Tar from cigarette smoke and substantially lowers the level of Nicotine. This fact is proved by testing at the prestigious ARISTA LABORATORIES located in the State of Virginia. Testing results show that smoking of Ultra Lights Marlboro with Nic-Out reduces the tar from 5.9 mg per cigarette to 0.12 mg per cigarette. Smoking regular Marlboro with Nic-Out brings the tar level down from 14.3 mg to 0.38 mg. Detailed Arista Lab-s Report may be presented on request of Interested Parties.

Top

Q What is the role of regular filter at the tip of a cigarette?

A The tobacco industry has attempted to alleviate the problems caused by poly-nuclear aromatics and cyanide by incorporating filters into cigarettes to remove these compounds when a smoker inhales. These filters are typically made of cellulose-based materials. The filters are effective in removing some of the toxic chemicals from tobacco smoke, but unfortunately a substantial amount still passes through the filter.

Top

Q Who are the users of Nic-Out Filters?

000039

A The Nic-Out creates the convenience of people of legal age who already smoke or are trying to cut down on smoking, or wish to have a better smoking experience. Nic-Out is capable to raise the quality of life with less health risks.

Top

Q How much does Nic-Out cost?

A The price information is reflected at the Nic-Out Shop page

Top

Q Is it secure to use credit card for payment at your site?

A We use the SSL (secure socket layer) protocol to encrypt information before it is sent across the Internet. All online orders are transmitted through secure connection via most recognized and trusted quick commerce payment processing centers. If for some reason you do not feel comfortable sending your credit card or account information online, you may call us toll free at 1-877-US-LUNGS (1-877-875-8647) or fax the information to: 1-718-435-5448.

Top

Q Can I become a Nic-Out distributor?

A This is an excellent Business Opportunity for the partners and associates of Nic-Out at the market for smoking accessories with harmless effect which increasing daily. Our company currently enjoys substantial profit margins. But this does not come at the expense of high prices for customers. They remain extremely competitive, and far superior to that of the conventional service.

Top

Q Is there any competition to Nic-Out at the current market?

A This tiny device is the greatest thing to hit the market at the time of multi-million nation-wide anti-smoking campaigns. To see how good this background is, it is ample to look at the site www.PhilipMorrisUSA.com . There are several direct competitive products exist on the market today similar to the Nic-Out. Other companies are targeting customers in the sphere of tobacco related goods offering more sophisticated inventions, sometimes difficult in maintenance. Some of our customers are familiar with various smoke filtering devices. These products include water filled filters, puncturing tools for making holes in the cigarettes in order to more intensively oxygenate the smoke, as well as additional filtering foams. Another area of indirect competition is the sale of "ready-to-use" water filtering devices Middle Eastern style. This has been the standard in the smoking ceremonies for long time. People go to stores and buy cigarettes off the rack. However, the resurgence of custom-made filters is a relatively recent phenomena. Thus Nic-Out foster customers interest by making smoking more comfortable and safe.

Top

Q What are the recommendations about quantity of my purchase?

A Depending on quality of tobacco you can use 1 filter with 3 to 5 cigarettes. Remember that each Nic-Out filter is disposable and can be used just limited number of times. Used filter cannot be cleaned. If you would use 1 filter with 3 cigarettes - 1 pack of filters can be sufficient for 4.5 packs of cigarettes. At the testing period for Nic-Out filters you can temporary feel some discomfort associated with draws and sensation of shortage of nicotine. However you will pass these inconveniences in several days. All of these inconveniences are incomparable with the advantages of the Nic-Out filters, namely:

- Extraction of up to 90 % of harmful tars, while not changing the taste of a cigarette.
- In 2 weeks smoker-s morning cough is eliminated.
- Nic-Out protects the teeth enamel from a dark strike and unpleasant smell from a mouth.
- Your valet is protected.
- Nic-Out keeps your health and save the lives of your relatives

Top

000040

Q: If I-m not satisfied with the results from Nic-Out, can I get a refund?

A: Yes, Nic-Out has a 100% RISK FREE guarantee. If for any reason you are unsatisfied with our product, simply return it with a written request within 30 days and a full refund less shipping and handling will be issued promptly.

The best of all is to quit smoking.
The next best thing is to use Nic-Out.

Top

Q: Refund Policy

A: If for any reason, you are not completely satisfied with any product you are entitled to return it to us within 30 days of receipt. You-ll be refunded the full purchase price or receive full credit toward future purchase of our product. Unfortunately, we cannot return shipping charges. This guarantee does not apply to any product intentionally damaged, marked or misused. Before returning your purchase, please E-mail us for instructions.

Top

Q: Privacy

A: We will never rent or sell any personal information about you acquired during the process of purchasing through us. We are in the business of selling health product to consumers, not personal information to marketers.

Top

Q: Shipping Time

A: Most orders are shipped within 48 hours (weekend & holidays excluded).

Top

Q: International Shipping

A: All international orders are shipped via EMS - Express Mail Service . EMS, the guaranteed worldwide courier service, is an international expedited shipping option offered by the Israel Postal Authority and 200 postal administrations worldwide. Your order may take 7 to 21 working days to arrive or longer, depending on the country. Please note deliveries are taking up to 5 days to Europe. If you require other shipping options, please inquire with your order. Please know your country-s rules and regulations. We are not responsible for orders confiscated or stopped by Customs or trade restrictions.

Top

Q: Usage By Minors

A: Because of the nature of the World Wide Web, Safety Aid Supplies cannot prohibit minors from visiting this site. We have to rely on parents, guardians and those responsible for supervising children and teenagers to decide which materials are appropriate for such children and teenagers to view and/or purchase. Safety Aid Supplies requires that all purchases on the site be made by adults 18 years of age or older, and all users who provide personal information to Safety Aid Supplies be 18 years of age or older.

Top

Q: Freight Damage

A: Please inspect all shipments upon arrival. If your order arrives damaged, please notify us immediately. Be sure to save the damaged cartons and their contents in their original condition until your refund or replacement is arranged.

Top

Q: Payment Methods

000041

Nic-Out (P.Service) proudly accepts PayPal only.

Top

Analysis| Services| Link to us

Copyright 2002 (c) P. Service All right reserved. Privacy Policy.

000042

Cigarette Filter for Smokers

THE BEST LIFE-SAVING GIFT FOR SMOKING LOVED ONES

Nic-Out
LOW NICOTINE - MORE TASTE

Our Contact Details

Corporate Headquarters
P.Service
P.O.Box 3599
Beer-Sheva, 84746
Israel

info@nic-out.com

- Home
- Product
- Wholesale
- Store
- FAQ
- Contact us

For orders in Israel:
Для заказов в Израиле:
להזמנות בישראל:
0522762679

ECigarete Official STUDY
Do Not Buy ECigs Until Read This Report
You'll Be Shocked What Found

Outlet Prices, #1 Service
Up to 75% Off Top Brands. Humidors,
Accessories & More. Shop & Save!

Copyright 2002 (c) P. Service All right reserved. Privacy Policy.

000043

Cigarette Filter for Smokers

THE BEST LIFE-SAVING GIFT FOR SMOKING LOVED ONES

Nic-Out
LOW NICOTINE · MORE TASTE

- Home
- Product
- Wholesale
- Store
- FAQ
- Contact us

For orders in Israel:
Для заказов в Израиле:
להזמנות בישראל:
0522762679

Analysis

Ben-Gurion University of the Negev,
Environment Analytical Laboratory (EAL),
Rotem Industrial Park, Mishor Yamin,
Israel 86800

Researches carried out by the American scientists for two types of cigarettes (one of which, **Benson and Hedges Ultra Mild**, characterized by high quality, and, **Time Light**, on the contrary - poor quality) have shown following results of application of filter Nic-Out.

Requirement	Benson & Hedges Ultra Mild		Time lights	
	Without "Nic-Out"	With "Nic-Out"	Without "Nic-Out"	With "Nic-Out"
Total particulate Matter, mg/cigarette	7.40	Not-Detected at detection limit 0.10	14.90	0.1
Water, mg/cigarette	0.32	Not-Detected at detection limit 0.10	1,40	Not-Detected at detection limit 0.10
Nicotine, mg/cigarette	0.53	Not-Detected at detection limit 0.10	0.90	Not-Detected at detection limit 0.10
Water and Nicotine Free condensate	6.60	Not-Detected at detection limit 0.10	12.60	0.1

This analysis was conducted April 25, 2002.

ECigarete Official STUDY
Do Not Buy ECigs Until Read This Report You'll Be Shocked What Found

The HOTTEST Vapor Deals
Free Shipping within 24 hours Starter Kits start at $12.99

Copyright 2002 (c) P. Service All right reserved. Privacy Policy.

000044

Cigarette Filter for Smokers

THE BEST LIFE-SAVING GIFT FOR SMOKING LOVED ONES

Nic-Out
LOW NICOTINE - MORE TASTE

Nic-Out Services

- Home
- Product
- Wholesale
- Store
- FAQ
- Contact us

For orders in Israel:
Для заказов в Израиле:
להזמנות בישראל:
0522762679

Nic-Out Hotlinks Directory

The top QUIT SMOKING resources on the net!
Finding the right material on the internet might be hard.
But there is an easier way - and it is right here!

ECigarete Official STUDY
Do Not Buy ECigs Until Read This Report You'll Be Shocked What Found
www.OfficialWire.com

FamousSmokeShop
Outlet Prices, Outstanding Service Up to 75% Off Humidors and More!
www.Famous-Smoke.com

The HOTTEST Vapor Deals
Free Shipping within 24 hours Starter Kits start at $12.99
www.volcanoecigs.com

Ways to Quit Smoking
Save Your Health & Your Money with Simple Ways to Break the Addiction.
Health.com/Quit-Smoking

Ads by Google

Copyright 2002 (c) P. Service All right reserved. Privacy Policy.

000045

Cigarette Filter for Smokers

THE BEST LIFE-SAVING GIFT FOR SMOKING LOVED ONES

Nic-Out

LOW NICOTINE - MORE TASTE

- Home
- Product
- Wholesale
- Store
- FAQ
- Contact us

For orders in Israel:
Для заказов в Израиле;
להזמנות בישראל:
0522762679

000046

Submit your site - Link To Us

If you have a health related website and are interested in exchanging website links with our site, please do the following:

1) Link to our beauty and prom website site using this code:
Nic-Out Anti-Nicotine Life Saving Filter For smokers - Anti-Nicotine Filters for smokers who take responsibility for their lives!

2) Email us at info@nic-out.com. Please include the location of our link so we can check it out. We will link back to your website ASAP!

Stop Smoking Now - Free
On-line Program. Proven Effective No Ads - No Gimmicks

Ways to Quit Smoking
Save Your Health & Your Money with Simple Ways to Break the Addiction.

The Best Online Cosmetics - Find and compare a wide variety of Cosmetic products. No more wasting time looking for Cosmetic. The Best Online Stores in one place!

Quit Smoking - Introducing our premium plus kit - only available here. Leading all-natural smoking cessation product. Millions have turned to it - how about you? Save up to $45 per kit for a limited time.

Quit Smoking Herbal Patch - The Nicocure patch is an all natural safe quit smoking aid. Eliminate all cravings for nicotine in 30 days or less.

Link Market - Free Link Exchange, Link Swap and Link Trade Directory - Have you ever tried to exchange links, swap links, or trade links? Was it hard? Use link market instead; - it is easy to use, free and very smart. It will save you hours of work.

How to Quit Smoking With QuitNic - Smoking is part habit, part addiction and part psychological dependence. Unless you have the right tools to deal with each aspect, you'll have a rough time quitting. Click here for more.

Quitting Smoking - Quit smoking for good in 38 minutes. Guaranteed to work or your money back. Dr. Grossman has helped 300,000+ people just like you stop smoking through hypnosis, and he will help you too.

Paint Houston - We are a local houston, tx paint contracting firm. We do commercial & residential painting as well as interior and exterior. We are happy to give free estimates and can handle any job from the smallest house to the largest commercial building.

Singapore Hotel - Singapore's leading eco friendly resort. Equipped with singapore's longest swimming pool at 95m using only fresh underground spring water.

Sprinkler Houston - We are the top sprinkler system installation and repair company in all of katy, texas. We have the lowest prices on repairs to existing systems or we can design an entirely new sprinkler system for your home or business. Call us today!

Roofing - We are a full service roofing contractor located in the small community of katy, texas. We also service much of houston, texas. We perform both commercial & residential roofing. Please contact us today for a free estimate on your roofing project!

Parallel Import Cars - Pro import motor is the leading parallel import car specialist in singapore. We specialize in all imported cars. Luxury and cng cars available.

Health Issues Tips - Health issues tips. Com offers quality information on how to overcome common ailments, disease and other health related issues to help you maintain your body, and stay in tip top shape so you can enjoy a long, fit and healthy life.

Health Issues Ebooks - Health issues ebooks offers quality information on how to overcome common ailments, disease and other health related issues to help you maintain your body, and stay in tip top shape so you can enjoy a long, fit and healthy life.

Mold Test Kit - Moldetect is a reliable and easy-to-use mold test kit used to confirm or rule out indoor mold contaminants and identify the molds present (including "toxic mold").

Face Cream With Botox - Our mission is to provide you with the most accurate and up to date information available regarding diseases and conditions, diet and exercise, women's health, men's health, child health, senior health, mental health, and alternative health.

000047

Directory Download - Do you want more traffic to your website. Please use our free link directory to get more traffic. Visitors add link, and all you need to do is approve or didapprove the links.

Cheap Web Hosting, Domain Name Registration Directory - $1.99 domain name, 10gb web space $3. 40/mo web hosting including web hosting directory and webmaster resources.

Appcraft - Software For Windows, Palm & Pocket Pc - Software store; offers a collection of various shareware and freeware downloads, including pc games, multimedia, utilities, video converter, business software and palm os & pocket pc applications.

Vigrx Plus - Enlargement and herbal enhancement

Vimax - All about vimax. The prescription drug men have been looking for.

West Michigan Window Tinting - At muskegon window tinting we specialize in protecting your home, business, or auto. We can help you reduce your energy costs, as well as fading and glare, add privacy to any home

Houston Siding - We are the leading siding company in all of katy, texas. We install & repair hardie plank, wood, vinyl & aluminum siding. We are also a full service painting contractor. Call us today for a free quote on your home.

Allstate Houston - We are a texas public insurance adjusting firm located in houston, tx. We represent home & business owners to their insurance companies on underpaid property damage claims. We are happy to give you a free evaluation of your claim. Call today!

Illinois Teeth Whitening - Our mission is to provide the most recent and accurate information currently available involving various diseases and conditions, fitness and nutrition, mental health, women's health issues, dermatology, optometry, dentistry, and alternative health.

Herbal Viagra - Herbal products, herbal remedies, herbal cures.

Granite Houston - We are the oldest and most well established granite countertop fabrication and installation company in the city of houston. Call us today to have one of our associates measure your home and give you a free quote!

Computer Security Cameras - We sell digital video recorders and cameras for home and commercial security. Protect your home or business with a dvr today!

Lucrative Investing - Wealth Investor - Visit lucrative investing. Free investment picks, services, resources, and news for the average investor to help level the playing field. We help make every investment a lucrative one. **now accepting guest writers. **

Free Music Videos Mp3 Games Movies Downloads. - Free music videos mp3 games movies downloads.

Nic-out Anti-nicotine Life Saving Filter For Smokers - Anti-nicotine filters for smokers who take responsibility for their lives.

Drywall Repair Houston Tx - We are the leading drywall repair company in houston, texas. We handle everything from patches to entire homes and businesses. We can match any texture and then complete the project with a custom paint job. Call us today for a free quote!

Parterapi (relationship Therapy) - Danish website about relationship therapy. Therapy in copenhagen and slagelse. Hans jorgen juhler, copenhagen. Eva blehe, slagelse.

Ixorashop - İxora shop aşık parfьm salyangoz krem online satış

Knee Pain - The pain relief clinic is a medical practice that combines traditional pain management techniques with the latest non-invasive treatment technologies available, to specifically help patients who suffer from both acute and persistent pain.

Used Cars Uk - Autoleague. Co. Uk is the right place for you to find used cars or dealers that sell used cars anywhere in the uk. Advertise your car for free.

Medical Practice Management Software, Medical Billing Software - Dsoft systems has developed a state of art medical practice software, ezmedpro. It provides appointment scheduling,medical billing, electronic medical records,medical management, case management, scheduling and revenue reports and many more functions

Penis Enlargement - Herbal supplements at wholesale prices

Online Texas Hold Em Poker Strategy Tips Software And Bonus - King cobra poker: the ultimate in free poker strategy, free poker tips, free poker lessons, and winning poker instruction and instructions. Best poker bonus codes & bonuses. Top poker software and top poker room reviews from an online poker expert.

Public Adjusters Galveston - Www. Docudamage. Com is an information resource created by a public adjuster for policyholders, adjusters and contractors wishing to learn more about property damage documentation & the claims process.

000048

Drinking Water - Our water, h2o, is our most precious resource. Learn the truth of this water planet. Water is a human right and hydration is the basic necessity we are all entitled to. The effects of dehydration may or may not be assisted by sports drinks. Mineral.

Penis Extender - Our penis extenders harness the power of resistance and tension in order to increase both length and girth of the penis. The tension gently pulls the penis outwards

Solargar Dealer - 750,000+ window tint users served home & car tinting advice, color tint samples, and window film specifications

Sm Solar Singapore - Solar panels made in singapore. Worldwide solar panel distributor. Small quantity of solar panel available. Singapore, malaysia solar project with installation.

Insurance Forum - We are a discussion forum dedicated to the exchange of information between policyholders and insurance claims professionals to promote the swift and thorough conclusion of property damage insurance claims.

Free Link Exchange - Reciprocal Link Exchange - Reciprocal Link - Free reciprocal link exchange website for link building services. Add your website to our link exchange directory for free then exchange and trade reciprocal back links with other websites to build your search engine ranking and increase traffic

Add Your Website To 100 Web Directories. - Add your website to 100 web directories.

Free Vedic Astrology Horoscope, Prediction India - Free astrology, free numerology, indian astrologer, prediction 2009, horoscope 2009, aries, taurus, gemini, cancer, leo, virgo, scorpio, sagitarious, capricorn, pisces, acquarious, libra, vedic, janampatri, love marriage compatibility, health, child

Free Law School Personal Statement Help For Minorities, Examples, Samples, Jd Admission Essays, Llm - Help for minorities to get accepted to law school, criminal justice, helping bring justice to the american criminal justice system.

The Baby Bedding Company - Retailer of baby bedding. Link partner for home improvement, construction, online, jobs, legal, lawyer, blogs, jewelry, web design hosting, real estate, finance, financial, travel, business, shopping, gambling, insurance & mortgage, house site

Free Business School Mba And Phd Personal Statement Editing Help, Management, Finance, Accounting - Free anonymous samples and examples of admission essays for business school programs

Sample Personal Statement Of Purpose For Graduate, Law, Business, Dental, Nuring, Social Work, Help - Free help and examples for writing admission essays for graduate school, medical school, etc.

Web Directory And Search Engine - Search the web directory to find websites, search websites with several search engine and the host-register. Com web directory.

Free Articles - Submit your article for free. Free article directory. Free content for your website.

Easy Way Rent A Car - Cancun Car Rental - Provide high quality service and assistanse 24 hours a day, 365 days per year offers all types of cars with unlimited mileage included in the rates. Car rental in cancun, playa del carmen, tulum the riviera maya and merida. Best cars at cheapest price

Defib China - Defib china offers a large resource of information on heart disease, automated external defibrillators (aed) and sudden cardiac arrest. Paying particular attention to topics that concern defibrillators and china.

Virginia Occupational Safety Consultants | Circle Safety & Health - Virginia occupational safety consultants. Osha standards safety training programs. Osha standards safety inspections. Safety and health consultants

Online Safety Training - Circle Safety & Health Consultants - Online safety training for individuals or whole companies. We offer a wide range of online safety training courses for construction, general and manufacturing industry for osha compliance.

Resumes, Cvs, Cover Letter Help, Free Samples, University, College Admission Application Essays - Free help getting into college and finding a job afterwards.

Biotechnologies Inc - Biotechnologies inc, manufacturar, exporter, laboratory bioreactor, laboratory autoclave, laboratory oven, india, laboratory pcr

Okbuyit.com - One of the largest retail and drop shipping wholesale distributor online, not only aims at providing the best source of products, but also hence maximizing the efficiency and shortening the time to source high quality products at the lowest price.

Physician in new york - Elite Health offers executive and concierge healthcare to patients across the world in their New York, NY office. With services such as heart scans, body scans, diagnostic imaging, and much more.

Fullerton CA Pain Management - Elite Pain Management offer the most comprehensive diagnosis and treatment of acute and chronic pain with a multimodal approach.

000049

Impotence - Learn the causes of erectile dysfunction so that preventive measure can be taken appropriate to the cause of the problem and overcome erectile dysfunction forever.

Promotional Items - The super store for promotional items and promotional products. Over 950 000 custom promotional products and business promotional items for trade show giveaways, corporate gifts, school promotions and business advertising.

Affordable California Health Insurance For Individuals, Families & Self Employed - Helping individuals,families and self employed find affordable california health insurance. Not all plans suit all people our aim is to help show our clients how to shop for plans that fit there budget and needs

Seo Professional Search Engine Optimization Consultants - Rank atlanta search engine optimization professionals bring your website targeted traffic by ranking it higher in the search engines. Rank atlanta ga seo provides cumming seo, roswell seo, marietta seo, alpharetta seo, dunwoody seo, norcross seo

Choosing Green Roofing In Atlanta - Guide to choosing green roofing in atlanta. Atlanta metal roofing services reviews, atlanta metal roofing, atlanta roofing services, atlanta roofing, atlanta roofs,choosing a roof atlanta, atlanta roofing choices, atlanta metal roofs

Yucatan Best Deal Car Rental - Best car rental option in merida, yucatan. Save on airport car rental tax, service and license charge. We have last minutwe special deals!

Kitchen Faucet Repair, Repair Single Handle Faucets - Repair your kitchen faucet, sink, repair faucets,kitchen faucet repair, pegaus faucet, peerless faucet, delta kitchen faucet, grohe kitchen faucet, american standard faucet, grohe faucet parts, fisher faucets,american standard parts

Resume Skills - Resume Software - Resume Services - Resume Help - Offers information on resume, interview, and skills of mba students.

The Grandfather Clocks Company - Retailer of grandfather clocks. Link partner for home improvement, construction, online, jobs, legal, lawyer, blogs, jewelry, web design hosting, real estate, finance, financial, travel, business, shopping, gambling, insurance & mortgage, house site

Vietnam Sapa Tour - Sapa tours, sapa trek, sapa adventure travel, sapa tour package, sapa travel vietnam, sapa trekking tour, sapa travel guide, sapa train tickets.

Vietnam Top Resorts - Vietnam top resorts, vietnam tours, vietnam hotel booking, vietnam travel packages, vietnam holidays, vietnam vacations.

The Platform Beds Company - Retailer of platform beds. Link partner for home improvement, construction, online, jobs, legal, lawyer, blogs, jewelry, web design & hosting, real estate, finance, financial, travel, business, shopping, gambling, insurance & mortgage, house sites.

Laundry Carts - Welcome to WebSupply.US! Our specialty is laundry carts and laundry cart equipment & accessories.

Alexander Slobidker | Oracle DBA - This site is maintained by Alexander Slobidker an Oracle DBA based in Beer-Sheva, Israel. Available for short and long term contract work. My work includes advanced performance tuning, capacity planning, database security, disaster recovery, PL/SQL programming, Oracle training, physical / logical database design and system integration in a UNIX, Linux and Windows NT/2000 environment. [Modify Link]

Online Dating Services For Sexy Adults - Net-date. Net - free online dating services. An online dating site for sexy adults all over the world.

Worthy Cancun Car Rental - Worthy cancun car rental: why pay more? We offer car rental service with insurances and coverages included in the rates (cdw, tp, all & pai). No hidden extra charge. Low rates guarantee! You get always unlimited mileage. Save on airport car rental tax

Mekong Delta Tours - Vietnam cruise tours, halong bay cruises, mekong delta cruise, mekong delta tours, mekong river travel, halong bay tours

Second Hand Mall - Second hand mall is your neighborhood free classified where you list second hand, used, new, old items, products, stuff free for sale, buy, donate, recycle, rent, exchange. You can also contact the seller freely. On www. Secondhandmall. Com

Cheaphostingandserver - The best hosting for you.

Carmel Dental Wax - Manufacturer of dental wax: orthodontic, crown and bridge, modelling sheets and tins, denture wax, bite registration waxes, baseplate waxes, base plate waxes, boxing wax, relief wax, utility wax, sprue wax and inlay base plate wax.

Marwoods Childrenswear Christening Wear Childrens Wear Designer J3 Delivery - Christening wear, childrens wear from marwoods childrenswear. Large selection of baby wear, new stock daily. Childrenswear, christeningwear. Designer childrenswear and christening wear. Sarah louise, little darlings, emile-et-rose, abella, pex, coco.

Early Pregnancy Test - Pregnancy is one of the most important periods in a woman's life. After the conception each woman wants to be certain of its pregnancy.

000050

Louis Vuitton, Chanel, Fendi, Gucci, Prada, At Www.glamorebags.com - Louis vuitton handbags, chanel, gucci, prada, fendi and all designer handbags are here. Free shipping for all designer louis vuitton handbags items. Shop freely for your louis vuitton needs at glamorebags. Com.

Tantra Massage - Looking for a sensual massage, check out our experienced and exotic massage therapists and masseuse.

Christian Movies - We are a site devoted to providing users the ability to scan the transcripts of thousands of movies to see if the content is offensive prior to viewing the movie. The site is intentionally bland to make it fast loading for mobile phones.

Us Tramadol | Tramadol Online | Buy Tramadol 180tabs 50mg $96 - Online pharmacy, providing low prices for medications. Us licensed pharmacies and doctors, fedex next day delivery available. No prior prescription required. Low prices for tramadol 180tabs 50mg $96, reorders only $90. Low price for tamiflu also.

Oligarch Healthcare - Manufacturer, exporter and supplier of pharam products from India.

Pharmacy Search - Source For All Your Pharmacy Needs. - Pharmacysearch. Org aims to provide users with information videos, and quality links to reliable companies for all their pharmacy needs such as cough and cold, on-line pharmacies, and alternative medicines.

Luontaistuotteet Proteiini Hiilihydraatit Vitamiini Sikainfluenssa - Www. Nutrition. Fi kun ei ehdi kaikista lisдravinteet ja luontaistuote jutuista huolehtimaan. Vitamiini - ja ravintolisд -tuotteet arkeen ja urheiluun. Sikainfluenssa - eli h1n1 virusta vastaan kehitetty immoiina

Best Weight Loss Pills - We'll provide you with real facts and suggest some safe, successful products (best weight loss pills) that have been tried and tested by people like you.

Join Oriflame Cosmetics For Free Or Shop Securely Online - Join oriflame cosmetics for free. Oriflame natural swedish cosmetics offering a great opportunity to earn money. Or shop securely online for your favourite oriflame make-up, cosmetics, skin care, fragrance, fashions and beauty related produts

Dulles Corridor Metrorail Project | Safety Provisions - Dulles corridor metrorail project safety provisions with circle safety and health consultants

Varicose Veins - The vein clinic is the leading clinic dedicated to varicose veins, spider veins & evlt treatments

Nicotine Products - Nicobrand offer's a wide range of Active Pharmaceutical Ingredients (API) that are highly in demand in various Pharma industries. Some of the products includes Nicotine Free Base, Nicotine Polacrilex & Nicotine Bitartrate Dihydrate.

Group Health Insurance - We provide Group health insurance, individual health insurance and dental insurance from Anthem Blue Cross, Blue Shield, Aetna, HealthNet, Pacificare, kaiser permanente

Preventive Medicine - Elite Health specializes in Preventive Medicine with membership that is focused on prevention.

Second mortgage rate - Your second mortgage rate depends on a handful of factors, some of which you can control. If you own a home and need access to cheap money, don't hesitate to speak to one of our mortgage brokers. Second mortgage rates are the best that they've been in decades.

Cardiologist miami - Cardiology treatments, minimally invasive cardiac surgery, heart valve replacement surgery and cardiac tests in Miami FL by Mount Sinai Heart Institute.

Specialty Specific EMR - Bizmatics offers unique and highly effective electronic medical record software for the specialty physician practice.

Pain management doctor, CA - Pacific Coast Spine Institute and pain center specializes in diagnosis and treatment of chronic and acute pain and has a fully accredited surgery center.

Dental park ridge - Global dental associates offer cosmetic dentistry in Chicago and exclusive dental care in Niles, Glenview, Park Ridge, Morton Grove Illinois. State-of-the-art digital paperless. $99 new patient Special.

Copyright 2002 (c) P. Service All right reserved. Privacy Policy.

000051

Privacy policy

What's in the tool kit for the new non-smoker?

000052

Nicotine replacement products help relieve some of the withdrawal symptoms people experience when they quit smoking. Three products for nicotine replacement therapy (NRT) are currently available over-the-counter in the U.S., including two nicotine patches and nicotine gum. Nicotine nasal spray and a nicotine inhaler are available only by prescription.
A new non-nicotine pill is also available as a smoking cessation option. **An aqua filter cigarette holder** (available in drug stores) can reduce the tar and irritation to your throat even if you're not ready to quit completely.
To be most effective, nicotine replacement products should be used in conjunction with a behavior change program. The goal in using nicotine medications is to stop smoking completely. If you plan to take nicotine medications, begin using them on the day you quit. If you continue to have strong urges to smoke or are struggling to stop smoking completely, ask your health care provider about additional help.

Patch
The nicotine patch releases a constant amount of nicotine in the body. The patches are similar to adhesive bandages and are available in different shapes and sizes. A larger patch delivers more nicotine through the skin. Less nicotine is obtained through the patch than in cigarettes. The patch also does not contain all the tars and poisonous gases that are found in cigarettes. Studies have shown that it is much easier to give up the patch than it would be to give up cigarettes for two reasons. First, people usually develop cravings for things that provide immediate satisfaction, such as chocolate. With the patch, the nicotine level in the body stays relatively constant day after day. There is no immediate satisfaction, so there is little craving for a patch. Second, anything people do often becomes a habit. Since the patch is applied only once a day, there is no strong habit to break. The patch may also have side effects, so read the information packet carefully.

Pill
A non-nicotine pill, bupropion hydrochloride (Zyban) was approved in 1997 to help smokers quit. The drug, available by prescription only, is also sold as an antidepressant under the name Wellbutrin. Following the doctor's orders is necessary with all types of nicotine replacement therapy. Use these products only as prescribed or according to labeling. These products can also be dangerous for pregnant women. Keep in mind that it is contraindicated with some protease inhibitors.

Where to get more information on smoking.

Action on Smoking and Health
Produces materials on a variety of smoking and health topics for the public with emphasis on legal action to protect nonsmokers' health.
2013 H Street, N.W.
Washington, DC 20006 (202) 659-4310
www.ash.org

000053

Less-NiC

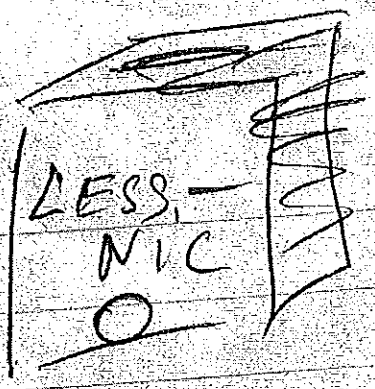

TAR-OUI

NiCTAR-OUI

NiCoLeSS

Small-NiC

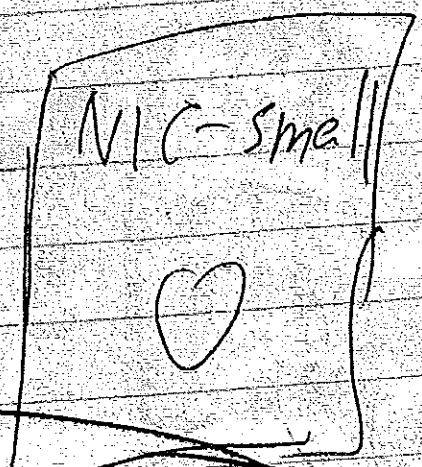

Cigarette Filters
For
Smoker

Less Nic / Qui Nic

Less TAR-Nic

No-Nic

Nic-Oui

LOW NICOTINE - MORE TASTE

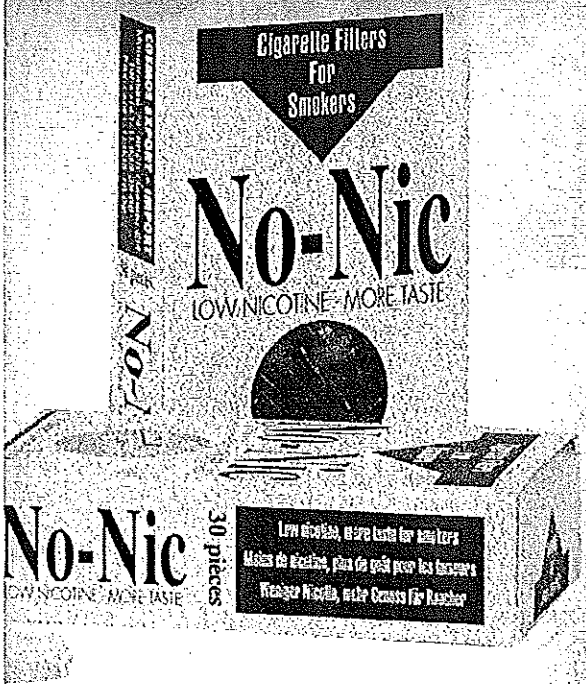

Weniger Nicotin, mehr Genuss für Raucher

tam tantum

Der No - Nic Filter setzt den nikotin und Teerstoffkonsum von 40% bis 60% herab.

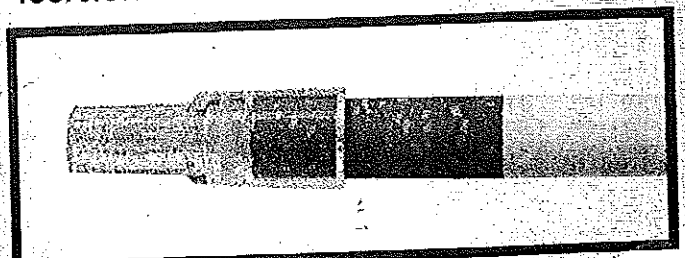

pour les fumeurs

Le filtre No - Nic diminue la consommation de nicotine et de goudron de 40% à 60%

000055

PART-1

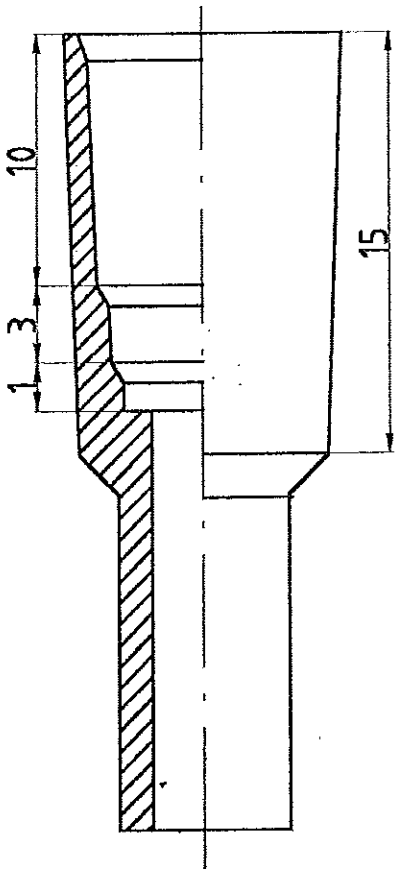

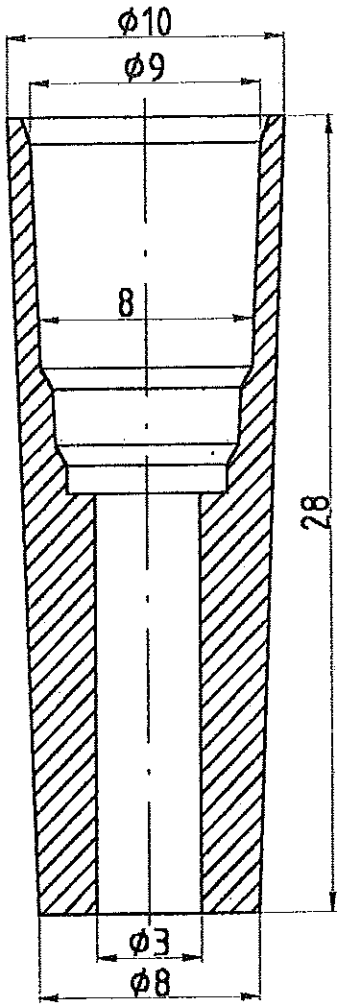

PART-2

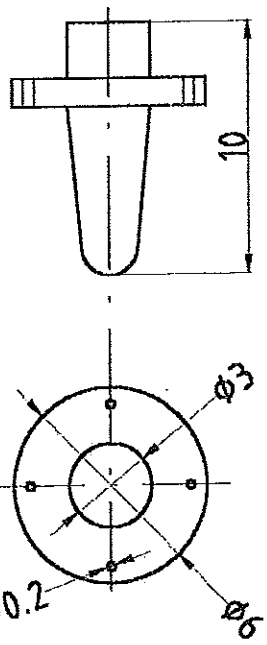

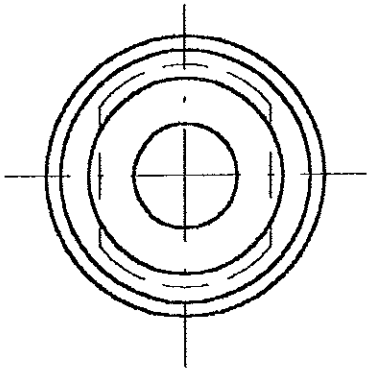

Cigarette Filter

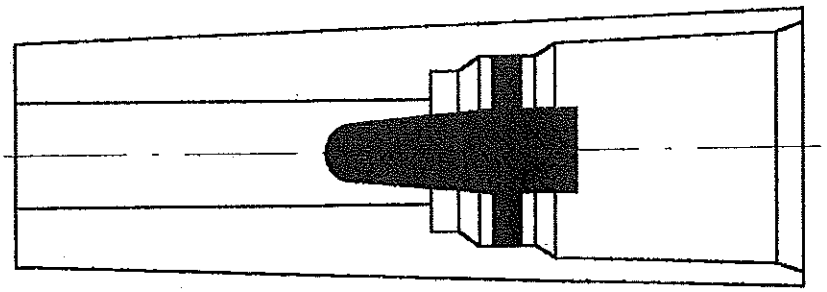

Nic-ONI

000056

P1: common body P2: movable part	Many stage cigarette filter for smoker	BG/6412-01		
Plastic material	Property of P.Service (Israel)			1999

165643 21/07/2003

רשם סימני המסחר - אישור הגשת בקשה
Registry of Trade Marks - Filing Receipt

הננו לאשר כי הוגשה בקשה לרישום סימן מסחר שפרטיה כדלקמן

LESS-NIC

Trade Mark No. 165643 מספר סימן

Application Date 13.07.2003 תאריך הגשה

Class 34 סוג

צרכי מעשנים.

NAHSHIN LEONID
153/36 Hazvi
Beer Sheva

נחשין לאוניד
הצבי 153/36
באר שבע

000057

MINISTRY OF JUSTICE
ISRAEL
רשם הפטנטים

אישור זה מהווה אישור הגשת בקשה בלבד ואינו מהווה תעודה המעידה על רישום הסימן.

הנכם מתבקשים להעיר בהקדם את הערותיכם במידה ונמצא שיבוש בקליטת הנתונים כפי שהם מופיעים באישור דלעיל.

TM USA 92

1. Targuard
2. NicoBuster
3. Stop
4. Suzen 95
5. Suzen 92
6. Less TAR
7. SUPER Suzen
8. Super Filter

000058

Gmail by Google

Alex Slobidker <slobidker@gmail.com>

Information

6 messages

عطاالله خضير <khudhagera@hotmail.com> Tue, Mar 10, 2009 at 20:21
To: Info Nic-Out <info@nic-out.com>

Hi Alex,

I am really sorry to bother you again about this subject but I just came back from Ecuador to check on the business and I found out that the seller of Nic-out from New Jersey (ENRIQUE GAJSTUT) is claiming to be the official dealer of the product and threatening our business just because he made a commercial to promote the product. Do you have any relation with this guy? And the web is(www.nicout.tv/) Please if there is anything you can help me with about this subject I will truly appreciate it, a new letter to approve our rights of commercialization would be really helpful.
Thank you so much
Atallah Khudhager

Windows Live™ Hotmail®...more than just e-mail. See how it works.

عطاالله خضير <khudhagera@hotmail.com> Wed, Nov 4, 2009 at 20:00
To: Info Nic-Out <info@nic-out.com>

Hi Alex,

How are you doing? I am sorry I didnt contact you before. I was in Iraq but now I am back in the States. I am traveling to Ecuador this week to check on business. It hasnt been working out the way I expected because of the economy but I have plans to get another shipping next year. So I will let you know and we will keep in touch.

Best regards,

Atallah Khudhager

From: info@nic-out.com
To: khudhagera@hotmail.com
Subject: RE: Information
Date: Wed, 12 Aug 2009 12:06:13 +0300

Hello Atallah,

How are you? I hope you are doing well!

000059

What about Nic-out business in your region?

Thanks,

Alex

From: ??????? ???? [mailto:khudhagera@hotmail.com]
Sent: Wednesday, March 11, 2009 2:21 AM
To: Info Nic-Out
Subject: Information

[Quoted text hidden]

Hotmail: Trusted email with powerful SPAM protection. Sign up now.

Info Nic-Out <info@nic-out.com> **Thu, Nov 5, 2009 at 02:20**
To: عطاالله خضير <khudhagera@hotmail.com>

Hello Atallah,
I am happy to talk to you again. Hope to hearing you soon.

Thanks,
Alex

2009/11/5 عطاالله خضير <khudhagera@hotmail.com>
[Quoted text hidden]

Info Nic-Out <info@nic-out.com> **Mon, Jan 4, 2010 at 05:15**
To: عطاالله خضير <khudhagera@hotmail.com>

Hello Atallah,
Happy New Year!
I
These days we have the possibility to produce 10pcs Nic-Out pack in addition to 30pcs.

If you are interested then contact me please.

Thanks,
Alex

2009/11/5 عطاالله خضير <khudhagera@hotmail.com>
> Hi Alex,
> [Quoted text hidden]

عطاالله خضير <khudhagera@hotmail.com> **Tue, Jan 5, 2010 at 19:26**
To: Info Nic-Out <info@nic-out.com>

000060

Hi Alex,
Happy New Year too!

I am always interested in Nic-Out. I am just hoping you could give us the same deal, for later this year. I am

planning on doing a new purchase this July. We are just waiting to finish the product we have left and we know also the import law is supossed to be changed by then. So, I'll be in touch soon.

Best regards,
Atallah

From: info@nic-out.com
Date: Mon, 4 Jan 2010 11:15:21 +0200
Subject: Re: Information
To: khudhagera@hotmail.com
[Quoted text hidden]

Info Nic-Out <info@nic-out.com> **Wed, Jan 6, 2010 at 02:51**
To: عطاالله خضير <khudhagera@hotmail.com>

Hi,
Be in contact with me please!

Thanks,
Alex

2010/1/6 عطاالله خضير <khudhagera@hotmail.com>
[Quoted text hidden]

000061

Gmail by Google

Alex Slobidker <slobidker@gmail.com>

Nic Out Product

6 messages

walrothr <walrothr@equityinternet.ca> **Fri, Feb 5, 2010 at 17:47**
Reply-To: walrothr@equityinternet.ca
To: info@nic-out.com

Hi Alex,
We are aware of a company selling the Nic Out product in Eastern Canada. The company is International LLC and has a web site www.nicout.tv
Are you aware of this company selling in Canada? When we purchased the company from Shelly we had the understanding she had an exclusive contract for Canada? This company is underselling to wholesalers in Eastern Canada and has cut our sales in this area. I have attached the product being sold.
Your response would be appreciated.

Ray Walroth
Afficianado Wholesale Cigar Corporation
1-888-660-0166
#8 7251-67 Street
Edmonton, AB
T6B 3N3
www.afficianadocigar.com

Sent via the WebMail system at mail.digitalweb.net

2 attachments

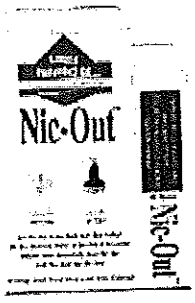

scan0003.jpg
557K

000062

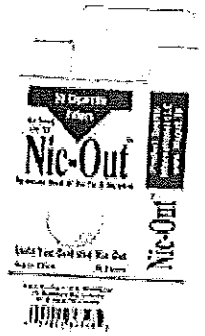

scan0002.jpg
652K

Info Nic-Out <info@nic-out.com> **Sat, Feb 6, 2010 at 05:24**
To: Leonid Nahshin <kiev65@gmail.com>

[Quoted text hidden]

Leonid Nahshin <kiev65@gmail.com> **Sat, Feb 6, 2010 at 05:40**
To: Info Nic-Out <info@nic-out.com>

Уважаемый,Рей.
Нам эта проблемма известна. Мы очень активно работаем над её устранением.
Компания,о которой Вы пишите,несколько лет назад была нашим дистрибьютером в Америке. На каком-то этапе, они стали завозить фальшивый Nic-Out из Китая. Мы им ничего не продаём. Также,как и не продаём и не входим в деловые контакты ни с кем на территории Канады. Так как Вы являетесь нашим эксклюзивным покупателем.
Мы находимся сейчас в стадии судебных разбирательств с этой компаней. Наш американский адвокат уверен,что в ближайшие пару месяцев,нам удастся закончить судебные разбираельства и эта компания вообще не сможет ввозить Nic-Out на территорию Америки,и как следствие этого и на территорию Канады. Тогда и у вас появятся хорошие перспективы делать продажи также и в Америке. В своё время,Шели делала несколько крупных продаж в Америку. Наберитесь немного терпения и Вы увидите,как ситуация очень резко изменится в положительную сторону для нашего совместного бизнеса.
2010/2/6 Info Nic-Out <info@nic-out.com>

[Quoted text hidden]

Info Nic-Out <info@nic-out.com> **Sat, Feb 6, 2010 at 05:54**
To: walrothr <walrothr@equityinternet.ca>

Hello Ray,
This problem is known. We very actively work over its elimination.
The company, which you are writing about, some years ago was our distributor in America. At any stage, they began to deliver faked Nic-Out from China. We sell them nothing as well as we do not sell and we do not enter into business contacts to anybody in territory of Canada, because you are our exclusive buyer.

These days we are in a stage of proceedings with this company. Our American lawyer is assured that in the nearest couple of months, we will manage to finish judicial investigations and this company will not be able to import Nic-Out on territory of America at all, both as consequence of it on territory of Canada. Then you will have good prospects to do sales as well in America. In due time, Shelly did some large sales to America. Please be patient and you will see, how a situation will very sharply change in a positive side for our joint business.

Regards,
Alex

000063

[Quoted text hidden]

Leonid Nahshin <kiev65@gmail.com> **Sun, Feb 7, 2010 at 09:34**
To: Info Nic-Out <info@nic-out.com>

Уважаемый,китаец.
Ваши намерения в последние месяцы нам не понятны. Вы появляетесь,изчезаете. Берёте полезную информация и тд. И после этого,не видно никаких конкретных действий,направленных на продолжение бизнеса. За последние время,мы получили определённые предложения, из ваших мест касающиеся продаж "Nic-Out".Прошло большое колличество времени от последнего вашего заказа. Никаких конкретных действий мы не видим.Определитесь,пожалуйста в течении ближайших двух дней: планируете Вы или нет продолжать с нами бизнес. Потому что,мы не можем и далее игнорировать выгодные предложения от других фирм, не видя от вас продвижения. Чтобы мы друг друга хорошо понимали:продвижение,это заказ груза. Нам кажется,что разговоров и переговоров было уже более,чем достаточно.

6 февраля 2010 г. 11:40 пользователь Leonid Nahshin <kiev65@gmail.com> написал:
[Quoted text hidden]

---

walrothr <walrothr@equityinternet.ca> **Mon, Feb 8, 2010 at 18:44**
Reply-To: walrothr@equityinternet.ca
To: Info Nic-Out <info@nic-out.com>

Hi Alex,
Thank you for your response. We felt this product was coming from China into the USA. We hope this issue can be resolved shortly and will not interfere with our Canadian market. We have been looking at the US market and have a number of options to consider. The US market is huge compared to the Canadian Market and would see a sharp jump in sales.
We have 10 master cases left in inventory and will need to order shortly. Thank you for your support Alex and P Service.
Regards,
Ray Walroth
Afficianado Wholesale Cigar Corporation
1-888-660-0166
#8 7251-67 Street
Edmonton, AB
T6B 3N3
www.afficianadocigar.com

[Quoted text hidden]

[Quoted text hidden]

000064

Gmail by Google

Alex Slobidker <slobidker@gmail.com>

i wanted you to know

Christine Gilliar <pm_christine@msn.com> **Mon, Jan 30, 2006 at 18:28**
To: sales@nic-out.com

I PURCHASED THIS PRODUCT THOUGH A MAGAZINE AND I HAVE BEEN USING IT SINCE SAT. I KNOW I PROBABLY WILL NEVER QUIT SO, SO FAR THIS IS THE BEST PRODUCT I CAN USE AND I WILL BE ORDERING MORE THOUGH YOU AND HOPEFULLY GET MY DAD ON IT AND ANYONE I RUN INTO THAT WANTS TO QUIT BUT CAN'T... SO THANK YOU!!! CRHISTINE
pm_christine@msn.com

000065

Gmail by Google

Alex Slobidker <slobidker@gmail.com>

Request for quote on Nic out

1 message

Eugene Higgins <psillc@comcast.net> **Fri, Aug 18, 2006 at 15:55**
To: Leon Haxman <nic-out@nic-out.com>

ATTN: Mr Leon Haxman
Thank you for your fax. Please send a Vol. / Price quote for Nic Out quantities from 20 Master cartons (14,400 packs) to 500 master cartons (360,000 packs).
Best Regards
Eugene Higgins
President: Product Source International LLC

000066

Gmail by Google

Alex Slobidker <slobidker@gmail.com>

it works

Buddymypuppy2005@aol.com <Buddymypuppy2005@aol.com> **Mon, Feb 27, 2006 at 11:52**
To: sales@nic-out.com

I just wanted to let you know my husband and I have been using nic-out for 4 weeks now and it has made a big difference in our smoking habits. Thank you for putting this product on the market.

Dianne Wetzel

buddymypuppy2005@aol.com

000067

Gmail by Google

Alex Slobidker <slobidker@gmail.com>

RE: MAIL ORDER?

DJ LEE <DJL85@webtv.net> Sun, Oct 22, 2006 at 09:41
To: sales@nic-out.com

Is it possible to order by
mail?
I have found the nic-out
really does help my breath-
ing, and I do enjoy smoking
and have for over 50 yrs. but
the Dr. tells me YOU GOT TO
QUIT. Now that I have used
NIC-OUT I don't think so. Do
hope I can order by mail.
Hope to ear from you soon..
Thanks for reading this...
DJ Lee

000068

Gmail by Google

Alex Slobidker <slobidker@gmail.com>

(no subject)

1 message

edward loewe <eelow@charter.net> Fri, Oct 27, 2006 at 22:02
To: Sales Nic-Out <sales@nic-out.com>

I recently purchased a large quantity of Nic-out filters as a gift for a close friend, and took note on your home page of your wish to find representatives in the United States. I am writing for two reasons: 1) I believe your product should be a born winner; and 2) I have considered funding a business enterprise for my daughter and son-in-law.

My own history is that of a successful, two career, PhD professional - formerly the CEO of a sizable organization that carried my name. I am retired, and have the time and resources to undertake whatever interests me. As it happens, I also have relatives in Israel.

If you care to have an exchange of information, you may contact me at the e-mail address this message carries, and you may also write to me at 17 Inglewood Rd., Asheville, NC, 28804. Should you proceed, an early detailing of your expectations, including how you envision the running of the enterprise, will be appreciated, as this will save each of us time in deciding whether there is basis for mutual interest.

Thank-you, and best wishes,

Ed
(Edward E. Loewe, PhD)

000069

Gmail by Google

Alex Slobidker <slobidker@gmail.com>

Re: Re:

1 message

edward loewe <eelow@charter.net> Mon, Oct 30, 2006 at 09:50
To: Sales Nic-Out <sales@nic-out.com>

Hello, Alex,

I do not have a "specific proposal." This is partly so because although I feel great enthusiasm for your product, I know nothing about your company, how you are staffed, and what your plans are for distribution in the United States. Usually a company with a new product has a plan for marketing it, and someone who wishes to become associated with the company must know whether he/she is able to work within the framework of this plan.

I have seen the with my own eyes the result of my friend using the filters, wherein the collection of tar products is obvious. Given that about 20% of all smokers are unable to stop smoking, the market for your product should be phenomenal in any developed country. So, and I have seldom had this reaction, here is a product that seems to me to be assured of success. Now, I have enough money myself, so that making money has for many years already been only a companion goal for me to doing something which helps people. Your product can help many millions.

Just a little background. My history is that of 1.) 22 years as an architect who had one of the larger firms in the United States; 2.) a clinical psychologist who saw patients for 16 years; 3.) a developer of large building projects; and 4.) an author with two published books - the latest came out this year. My relatives in Israel are Yarri and Nurit Menahim (Harazim) - Yarri is a worldwide known economist. Meanwhile, I have relatives in England and Germany.

Anything I undertake, I look at very carefully. I like new experiences, but do not need them. I like to do something good, but do not wish to become involved with something someone else can do much better (maybe an "venture capital" organization putting money into your company is better for you than someone such as myself). I don't like to waste someone else's time, and certainly not my own. If I decide to do something, it is done carefully, and with every necessary effort. If I need consultants, I hire them.

You know, we are exploring here. I would have to know more about you, your people, your manufacturing and shipping capabilities, and the background of your whole effort. And of course, I am telling you some preliminary things here about me, so you can already make some early judgments. To begin to know such things is the only way to have confidence, and to decide "yes," or "no."

Let me stop here for now, and allow you to react.

Bets wishes,

Ed

> ----- Original Message -----
> **From:** Sales Nic-Out
> **To:** edward loewe
> **Sent:** Sunday, October 29, 2006 7:02 AM
> **Subject:** Re:
>
> Dear Ed,

000070

Many thanks for your attention to our product.

We really search decent and reliable partners on USA area.
We receive various offers, but your letter makes impression of the serious and decent person. In addition, your communications with Israel very much imposes us and serves us as the additional, extremely positive factor.

If you have specific proposals, we shall be glad to discuss them.

Yours sincerely,
Alex
Sales Manager
Nic-Out (Israel)

----- Original Message ----
From: edward loewe <eelow@charter.net>
To: Sales Nic-Out <sales@nic-out.com>
Sent: Saturday, October 28, 2006 4:02:47 AM
Subject:

I recently purchased a large quantity of Nic-out filters as a gift for a close friend, and took note on your home page of your wish to find representatives in the United States. I am writing for two reasons: 1) I believe your product should be a born winner; and 2) I have considered funding a business enterprise for my daughter and son-in-law.

My own history is that of a successful, two career, PhD professional - formerly the CEO of a sizable organization that carried my name. I am retired, and have the time and resources to undertake whatever interests me. As it happens, I also have relatives in Israel.

If you care to have an exchange of information, you may contact me at the e-mail address this message carries, and you may also write to me at 17 Inglewood Rd., Asheville, NC, 28804. Should you proceed, an early detailing of your expectations, including how you envision the running of the enterprise, will be appreciated, as this will save each of us time in deciding whether there is basis for mutual interest.

Thank-you, and best wishes,

Ed
(Edward E. Loewe, PhD)

000071

Gmail by Google

Alex Slobidker <slobidker@gmail.com>

(no subject)

edward loewe <eelow@charter.net> Thu, Nov 2, 2006 at 14:55
To: Sales Nic-Out <sales@nic-out.com>

Alex,

Perhaps, if you have a moment to spare, you can answer the following question. It interests me partly because I am about to purchase additional large quamtities of filters for friends.

The person I initially gave a gift of the nic-out filters is very happy with them. However, she does report that she now smokes a full cigarette, instead of the half ones she smoked while trying to reduce smoking without the use of a filter. I thought first that, psychologically, she might believe that with the filtering of the smoke she could allow herself more enjoyment than occurs with smoking half cigarettes. But, she insists this is not the case, and that she smokes a whole one with the filter now, because the cigarette burns twice as fast when using the filter. Is your company aware of this dynamic....that the filter causes the cigarette to burn faster?

Thanks,

Ed Loewe

000072

Gmail by Google

Alex Slobidker <slobidker@gmail.com>

Re: Nic-Out

benjamin prayogo <b_prayogo@plasa.com> **Tue, Nov 25, 2003 at 06:04**
To: business@pservicegroup.com

Dear Sir,
I'm impressed with your company and your product.
Would you like to send me your catalogue and sample for
free for me ?
Please advise our address as follow :

INDONESIA SOUVENIR
ATTN : BENYAMIN PRAYOGO
JL HANKAM NO 13
RT 06 RW 09
RAGUNAN PASARMINGGU
JAKARTA 12550
INDONESIA

So, we can review it.
Thank you in advance for your kindness.

Warm regards,
Prayogo

On Sun, 2 Nov 2003 02:12:30 -0800 (PST)
business@pservicegroup.com wrote:
> Dear Mr. prayogo bonie (witaradyasari)
>,
>
>You buying trade lead has received a message from Mr
>Alexander Slobidker (P. Service) . via Alibaba.com.
>
>To contact him, just reply this email.
>
>==========
==========
>
>
>From:
> Sender Name: Mr Alexander Slobidker
> Company: P. Service
> Country: Israel Address: Hazvi
>st., 153/36
> E-mail: business@pservicegroup.com
> Zip
> Tel: 972-08-6280463
>Fax: 972-08-6280463
>Subject: Nic-Out
>
>MESSAGE:
>

000073

>Our Company (P.Service) is operating in Israeli market
>since 1999. The Company is the exclusive proprietor of
>NIC-OUT cigarette filters. NIC-OUT filters for cigarette
>smoke cleansing are the Israeli development of 1999
>(Patent Claim No. 151387). The plastic used in NIC-OUT
>filters is similar to that used in the manufacturing of
>infant bottles. The plastic quality corresponds to the
>European standards of class A food plastics.
>
>Due to the mechanical technique for cigarette smoke
>cleansing, a smoker does not feel any changes in the
>conventional cigarette taste. However, harmful substances
>released during cigarette combustion are blocked by
>NIC-OUT filters and do not penetrate human organism.
>
>Thus, the research results have shown that following
>smoke passing through the filter nicotine content drops
>5-fold! Up to 90% of tar and resins are halted by NIC-OUT
>filters.
>
>Owing to it, harmful substances do not sediment in
>smokers lungs, and browning of dental enamel is prevented
>as well.
>
>Each NIC-OUT filter can be used for 5 to 10 cigarettes -
>as a function of tobacco quality. Already after the first
>cigarette, a smoker can see the quantity of harmful
>substances blocked by the filter, and this is quite
>evident proof for a potential user.
>
>The persons who smoke above 15 cigarettes a day are
>characterized by the typical "smoker's cough",
>particularly suffocative in the morning. The experiments
>on volunteers were conducted, and in 14 days following
>smoking accompanied by NIC-OUT filter use, cough totally
>disappeared. Sensitivity of oral taste receptors also
>undergoes considerable changes.
>
>
>
>Of essential importance for marketing is the fact that a
>smoker, having used NIC-OUT filters for only a week,
>cannot do without them later. Hence, a stable demand is
>formed.
>
>
>
>Our Anti-nicotine filters Nic-Out is very profitable
>business, up to 300% profit margin. When people start to
>smoke with filters, they can not stop. They feel
>discomfort when smoking without it.
>
>We are interested in cooperation with you and your
>company.
>
>Our product is currently booming in USA, Canada, Israel,
>Ukraine and Korea.

000074

>
>
>
>Packing data:
>
>1 package contains 30 filters (each good for 5-10
>cigarettes)
>
>1 carton contains 20 packages.
>
>1 Master Case contains 36 cartons.
>
>Sea container (20 F) contains 270 master cases.
>
>
>
>Prices:
>
>Price per pack $0.64 CIF for minimal order quantity - 20
>Master Cases.
>
>Delivery time 5-10 days. We ensure fast delivery to any
>place.
>
>You can visit our site http://www.nic-out.com
>
>
>
>Best Regards,
>
>Alexander Slobidker,
>
>Sales Manager (sales@nic-out.com)
>
>Nic-Out
>
>
>
>Please find the attached file at the URL below:
>
> Product Picture:
>
>==========
==========
>
>-If you do not wish to receive emails from Mr Alexander
>Slobidker any more,block his/her email address now at the
>URL below:
> http://my.alibaba.com/apps/feedback?req.page=block.init&&memberId=slobidker
>-Find more products at Alibaba.com.
>-For any other problems, contact us at
>buyer@alibaba-inc.com.
>

000075

>
>
>Alibaba.com
>Global Business to Business e-Market!

>

==========
==========
"Selamat Hari Idul Fitri 1 Syawal 1424 H - Mohon Maaf Lahir dan Batin" -- PlasaCom
==========
==========

000078

Gmail by Google

Alex Slobidker <slobidker@gmail.com>

NIC - OUT filters

Eva B. <evabelyea@rogers.com> Mon, Jun 19, 2006 at 17:33
To: sales@nic-out.com

Dear Sirs:

Just wanted to let you know how pleased I am with your product. I am on my second box of filters. I am smoking less, and feeling better. My smokers cough is minimal now. I have been a pack a day smoker for 38 years.

EVA BP.

000077

u

Cigarette Filters For Smoker

~~Less Nic~~ / Oui - Nic

Less TAR-Nic

No-Nic

Nic-OUI

LOW NICOTINE - MORE TASTE

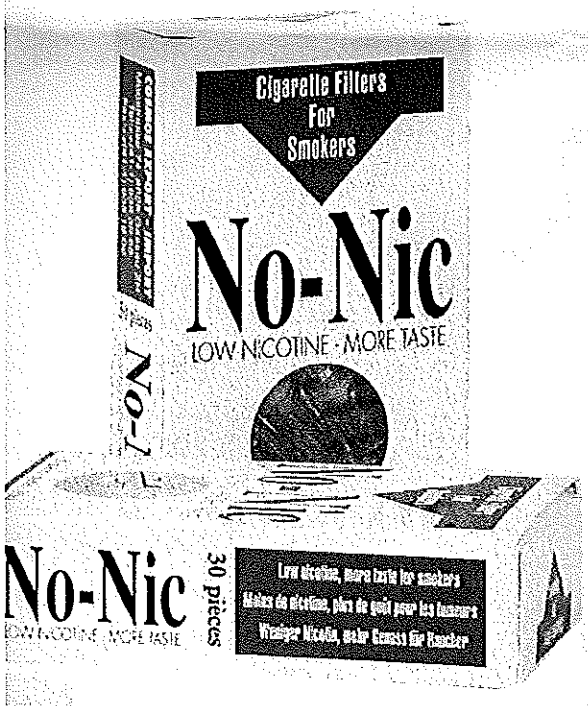

Weniger Nicotin, mehr Genuss für Raucher

Der No - Nic Filter setzt den nikotin und Teerstoffkonsum von 40% bis 60% herab.

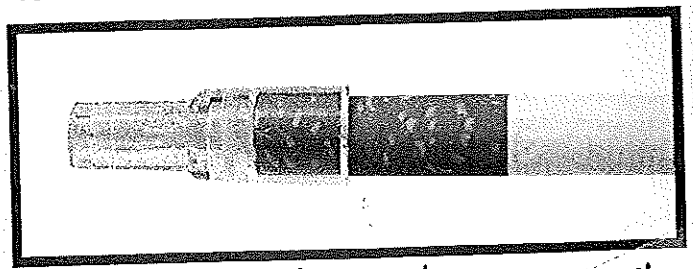

Le filtre No - Nic diminue la consommation de nicotine et de goudron de 40% à 60%

pour les fumeurs

tam tantum

000078

YAHOO! Mail

Yahoo! - My Yahoo! - Help

powered by hp

classmates

CLICK HERE

Find the gang from High School

CLICK HERE

CLICK HERE

Find pa the Mi

CLICK

Mail | Addresses | Calendar | Notepad | nic_out@yahoo.com [Sign Out]

Check Mail | Compose | Mail Upgrades - Search Mail - Mail Options

Folders [Add]

Inbox

Draft

Sent

Bulk (1) [Empty]

Trash [Empty]

Free Credit Report

Sell a Home For Top $

Free faxes in your Yahoo! Mail

Previous | Next | Back to Messages

Printable View - Full Headers

Delete | Reply | Reply All | Forward | as attachment | Move to folder... | OK

This message is not flagged. [Flag Message - Mark as Unread]

Date: Sat, 24 Aug 2002 09:31:21 -0700 (PDT)

From: "NSC" <abali_nm@yahoo.com> | **This is Spam** | **Add to Address Book**

Subject: N.MASLOV - RE: NIC-OUT TEXTS

To: nic_out@yahoo.com

CC: "Zurab Yukhananov" <zy@arcon.ru>

ВИКТОРУ ЮХАНАНОВУ:

НАРЯДУ С ВКЛЮЧЕНИЕМ АМЕРИКАНСКОГО ШТРИХ-КОДА,
ПРЕДЛАГАЮ ВНЕСТИ НЕКОТОРЫЕ ИЗМЕНЕНИЯ В АНГЛИЙСКИЙ
ТЕКСТ НА УПАКОВКЕ ПАЧЕК, А ТАКЖЕ СДЕЛАТЬ ПОДСТРОЧНЫЙ
ПЕРЕВОД НА ИСПАНСКОМ ЯЗЫКЕ.

ВАЖНЕЙШИМ ФАКТОРОМ ЕФФЕКТИВНОСТИ РАБОТЫ ФИЛЬТРА
ЯВЛЯЕТСЯ УДАЛЕНИЕ КАНЦЕРОГЕНОВ, СОДЕРЖАЩИХСЯ В
ЭКСТРАГИРУЕМЫХ ИЗ ДЫМА СМОЛАХ. В СИЛУ ЭТОГО НА ЛИЦЕВОЙ
ПАНЕЛИ ПАЧКИ, А ТАКЖЕ НА УПАКОВКЕ БЛОКА СЛЕДУЕТ ВМЕСТО
СЛОВ «МЕНЬШЕ НИКОТИНА - ЛУЧШЕ ВКУС» НАПИСАТЬ «МЕНЬШЕ
СМОЛ И НИКОТИНА - ЛУЧШЕ ВКУС» (LOW TAR & NICOTINE -
MORE TASTE).

СОГЛАСНО ЗАКОНАМ США, НА УПАКОВКЕ ИМПОРТИРУЕМЫХ
ТОВАРОВ ДОЛЖНА БЫТЬ В ОБЯЗАТЕЛЬНОМ ПОРЯДКЕ УКАЗАНА
СТРАНА, ГДЕ ИЗГОТОВЛЕН ПРОДУКТ. ТАКИМ ОБРАЗОМ, НАДПИСЬ
«PROJE(K)CT OF P.SERVICE. ISRAEL» СЛЕДУЕТ ЗАМЕНИТЬ НА
«MADE IN TURKEY».

ПРОСЬБА РАССМОТРЕТЬ ВОПРОС О ПЕЧАТИ ЦВЕТНОГО
РЕКЛАМНОГО ПЛАКАТА РАЗМЕРОМ А-2 ОТДЕЛЬНО НА АНГЛИЙСКОМ
И НА ИСПАНСКОМ ЯЗЫКАХ - НА ОДНОЙ И НА ДРУГОЙ СТОРОНЕ.
В КАЧЕСТВЕ ИЛЛЮСТРАЦИИ НА ПЛАКАТЕ МОЖНО ИСПОЛЬЗОВАТЬ
ИЗОБРАЖЕНИЕ БЛОКА ИЗ 20 ПАЧЕК ФИЛЬТРОВ.
ТВОРЧЕСКОЕ ПРЕДЛОЖЕНИЕ ПО ВЫБОРУ ИЛЛЮСТРАЦИИ И ДИЗАЙНА
ПЛАКАТА СЛЕДУЕТ ПРЕДВАРИТЕЛЬНО СОГЛАСОВАТЬ.
КОЛИЧЕСТВО ДВУЯЗЫЧНЫХ ПЛАКАТОВ - ПО ДВА НА КАЖДЫЙ
БЛОК.
НИЖЕ СЛЕДУЕТ ПРИМЕРНЫЙ ТЕКСТ ПЛАКАТА.

MIRACLE SAFETY INVENTION
THE BEST LIFE-SAVING GIFT
FOR SMOKING LOVED ONES

NIC-OUT filter cuts down on carcinogens that are found
in cigarette smoke, and thus helps to reduce the
health risks associated with smoking.

000079

NIC-OUT WORKS:
MOST OF THE TAR IS EXTRACTED
THE NICOTINE IS LOWERED DOWN

No changes in the taste of a cigarette, since method used is mechanical smoke purification. Impressive, drastic color change of the bright yellow insert with each consumed cigarette.

The immediate result of using NIC-OUT is disappearance of tormenting "morning cough".

Last, but not least: the smokers save money, since each cigarette smokes longer with NIC-OUT.

One Filter is good for 5 to 10 cigarettes.

KEEP YOUR LUNGS SAFE:
ENJOY NIC-OUT!

=====
With best regards,
Nikolai Maslov
Tel: 1-718-796-4820
Fax: 1-718-543-4587
Please, confirm your receipt of this message.

Do You Yahoo!?
Yahoo! Finance - Get real-time stock quotes
http://finance.yahoo.com

Copyright © 1994-2002 Yahoo! Inc. All rights reserved. Terms of Service - Guidelines
NOTICE: We collect personal information on this site.
To learn more about how we use your information, see our Privacy Policy

000030

PROUD TO BE AN AMERICAN

Enjoy NIC-OUT FOR THE HEALTHY N A T I O N!

As a Smart Buyer, with purchase of each pack of this product you will get Free Bonus – USA Flag Lapel Pin

According to the American Heart Association, each year smoking accounts for about **5 million deaths worldwide**. Even with these grim statistics, many people are unable or unwilling to quit but are willing to accept responsibility for their health.

Now smokers can take **Special Cigarette Filter Nic-Out**, developed by the scientists of Israel, to help reduce nicotine, tar and thus the health risks associated with smoking.

It is always safer to quit smoking. Meanwhile there is an alternatives that may help a smoker enjoy **Better Health and Longer Life**.

Read more in the Flyers attached herewith

burda ticaret

INVOICE 3511

26-03-2002

P.SERVICE
AVRAHAM MAPO 10/3
BEER SHEVA / ISRAEL

For Transportation of 20 coliboxes of Nic-out cigarette filters to NewYork/U.S.A. for Company Safety Aid Supplies Inc.:

Transport	1176 USD
Conchimento Document	80 USD
Insurance	44 USD
Total	1300 USD (OnethousandthreehundredUSD)

burda ticaret
Ceviz Sok.
Merter Vergi Dairesi 268 003 1824

000082

Keresteciler Sitesi Fatih Cad. Ceviz Sok. No: 12 / 2 Merter - İstanbul / TÜRKİYE
Tel: +90 (212) 557 25 48 - 555 02 23 - 556 64 21 Fax: +90 (212) 677 54 03
e-mail : burdaticaret@superonline.com

Exporter's Statement of Origin

I certify that the goods "Nic-Out" Holders (AWD 125 8426 0886) described in this invoice or in the attached invoice no. 3511 26/03/2002, were produced in TURKEY, by request of beneficiary of "P. Service" company, and that at least 100% of the ex-factory price of the goods originates in the beneficiary country of ISRAEL.

Name and Title

Nahshin Leonid
Director of P. Service company, ISRAEL

Company Name and Address

"P.SERVICE" Avraham Mapo 10/3 Beer-Sheva. ISRAEL

Telephone and Fax Numbers

Tel: ++972-52762679
Fax: ++972-86421322

29/03/2002

P. SERVICE
NIC-OUT
ISRAEL.
ישראל
פ. סרוויס

Less-Nic

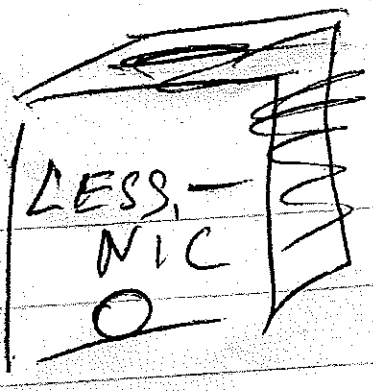

TAR-OUI

NICTAR-OUI

Nicoless

Smal-Nic

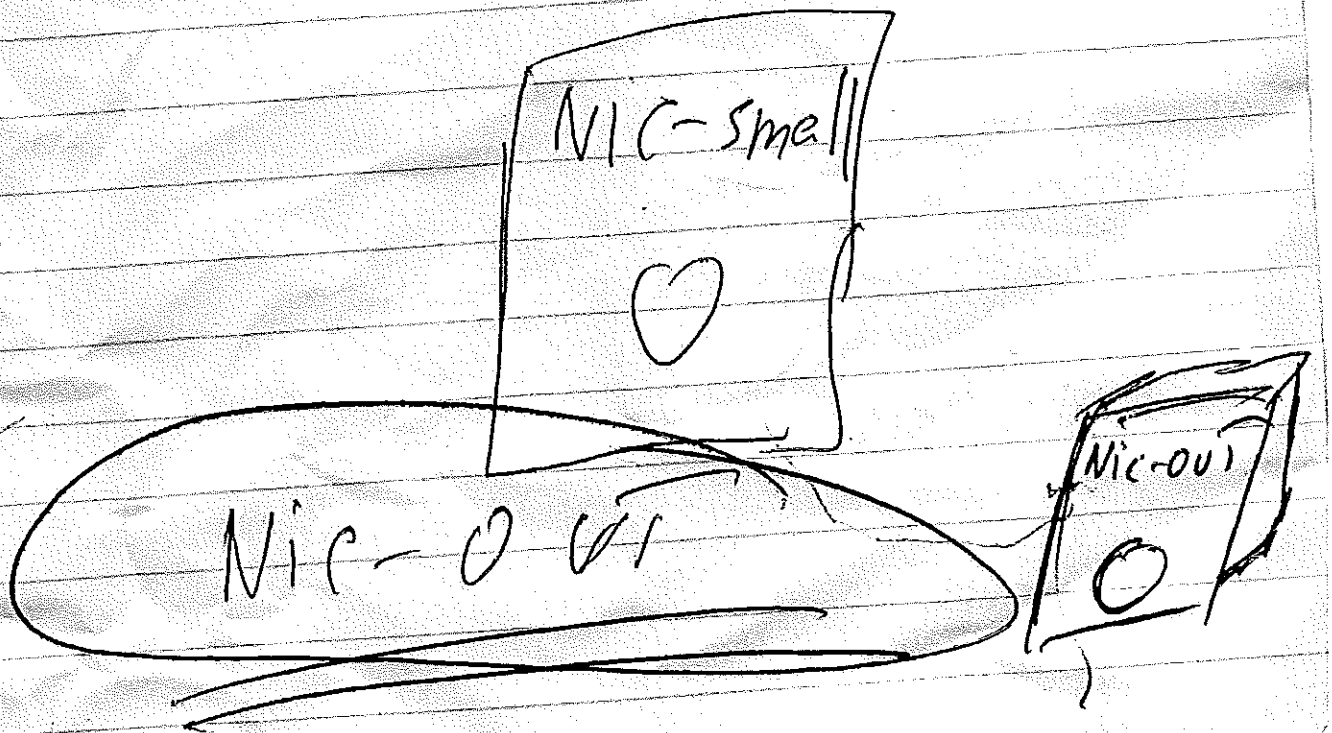

Gmail by Google

Alex Slobidker <slobidker@gmail.com>

Nic Out Product

6 messages

walrothr <walrothr@equityinternet.ca> **Fri, Feb 5, 2010 at 17:47**
Reply-To: walrothr@equityinternet.ca
To: info@nic-out.com

Hi Alex,
We are aware of a company selling the Nic Out product in Eastern Canada. The company is International LLC and has a web site www.nicout.tv
Are you aware of this company selling in Canada? When we purchased the company from Shelly we had the understanding she had an exclusive contract for Canada? This company is underselling to wholesalers in Eastern Canada and has cut our sales in this area. I have attached the product being sold.
Your response would be appreciated.

Ray Walroth
Afficianado Wholesale Cigar Corporation
1-888-660-0166
#8 7251-67 Street
Edmonton, AB
T6B 3N3
www.afficianadocigar.com

Sent via the WebMail system at mail.digitalweb.net

2 attachments

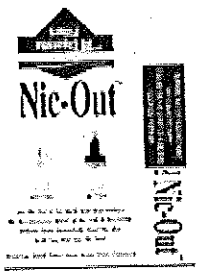

scan0003.jpg
557K

000085

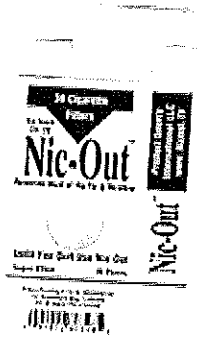

scan0002.jpg
652K

Info Nic-Out <info@nic-out.com> **Sat, Feb 6, 2010 at 05:24**
To: Leonid Nahshin <kiev65@gmail.com>

[Quoted text hidden]

Leonid Nahshin <kiev65@gmail.com> **Sat, Feb 6, 2010 at 05:40**
To: Info Nic-Out <info@nic-out.com>

Уважаемый,Рей.
Нам эта проблемма известна. Мы очень активно работаем над её устранением.
Компания,о которой Вы пишите,несколько лет назад была нашим дистрибьютером в Америке. На каком-то этапе, они стали завозить фальшивый Nic-Out из Китая. Мы им ничего не продаём. Также,как и не продаём и не входим в деловые контакты ни с кем на территории Канады. Так как Вы являетесь нашим эксклюзивным покупателем.
Мы находимся сейчас в стадии судебных разбирательств с этой компаней. Наш американский адвокат уверен,что в ближайшие пару месяцев,нам удастся закончить судебные разбираельства и эта компания вообще не сможет ввозить Nic-Out на территорию Америки,и как следствие этого и на территорию Канады. Тогда и у вас появятся хорошие перспективы делать продажи также и в Америке. В своё время,Шели делала несколько крупных продаж в Америку. Наберитесь немного терпения и Вы увидите,как ситуация очень резко изменитсся в положительную сторону для нашего совместного бизнеса.
2010/2/6 Info Nic-Out <info@nic-out.com>

[Quoted text hidden]

Info Nic-Out <info@nic-out.com> **Sat, Feb 6, 2010 at 05:54**
To: walrothr <walrothr@equityinternet.ca>

Hello Ray,
This problem is known. We very actively work over its elimination.
The company, which you are writing about, some years ago was our distributor in America. At any stage, they began to deliver faked Nic-Out from China. We sell them nothing as well as we do not sell and we do not enter into business contacts to anybody in territory of Canada, because you are our exclusive buyer.

These days we are in a stage of proceedings with this company. Our American lawyer is assured that in the nearest couple of months, we will manage to finish judicial investigations and this company will not be able to import Nic-Out on territory of America at all, both as consequence of it on territory of Canada. Then you will have good prospects to do sales as well in America. In due time, Shelly did some large sales to America. Please be patient and you will see, how a situation will very sharply change in a positive side for our joint business.

Regards,
Alex

000086

[Quoted text hidden]

Leonid Nahshin <kiev65@gmail.com> **Sun, Feb 7, 2010 at 09:34**
To: Info Nic-Out <info@nic-out.com>

Уважаемый,китаец.
Ваши намерения в последние месяцы нам не понятны. Вы появляетесь,изчезаете. Берёте полезную информация и тд. И после этого,не видно никаких конкретных действий,направленных на продолжение бизнеса. За последние время,мы получили определённые предложения, из ваших мест касающиеся продаж "Nic-Out".Прошло большое колличество времени от последнего вашего заказа. Никаких конкретных действий мы не видим.Определитесь,пожалуйста в течении ближайших двух дней: планируете Вы или нет продолжать с нами бизнес. Потому что,мы не можем и далее игнорировать выгодные предложения от других фирм, не видя от вас продвижения. Чтобы мы друг друга хорошо понимали:продвижение,это заказ груза. Нам кажется,что разговоров и переговоров было уже более,чем достаточно.

6 февраля 2010 г. 11:40 пользователь Leonid Nahshin <kiev65@gmail.com> написал:
[Quoted text hidden]

---

walrothr <walrothr@equityinternet.ca> **Mon, Feb 8, 2010 at 18:44**
Reply-To: walrothr@equityinternet.ca
To: Info Nic-Out <info@nic-out.com>

Hi Alex,
Thank you for your response. We felt this product was coming from China into the USA. We hope this issue can be resolved shortly and will not interfere with our Canadian market. We have been looking at the US market and have a number of options to consider. The US market is huge compared to the Canadian Market and would see a sharp jump in sales.
We have 10 master cases left in inventory and will need to order shortly. Thank you for your support Alex and P Service.
Regards,
Ray Walroth
Afficianado Wholesale Cigar Corporation
1-888-660-0166
#8 7251-67 Street
Edmonton, AB
T6B 3N3
www.afficianadocigar.com

[Quoted text hidden]

[Quoted text hidden]

000087

Gmail by Google

Alex Slobidker <slobidker@gmail.com>

Information

6 messages

عطاالله خضير <khudhagera@hotmail.com> Tue, Mar 10, 2009 at 20:21
To: Info Nic-Out <info@nic-out.com>

Hi Alex,

I am really sorry to bother you again about this subject but I just came back from Ecuador to check on the business and I found out that the seller of Nic-out from New Jersey (ENRIQUE GAJSTUT) is claiming to be the official dealer of the product and threatening our business just because he made a commercial to promote the product. Do you have any relation with this guy? And the web is(www.nicout.tv/) Please if there is anything you can help me with about this subject I will truly appreciate it, a new letter to approve our rights of commercialization would be really helpful.
Thank you so much
Atallah Khudhager

Windows Live™ Hotmail®...more than just e-mail. See how it works.

عطاالله خضير <khudhagera@hotmail.com> Wed, Nov 4, 2009 at 20:00
To: Info Nic-Out <info@nic-out.com>

Hi Alex,

How are you doing? I am sorry I didnt contact you before. I was in Iraq but now I am back in the States. I am traveling to Ecuador this week to check on business. It hasnt been working out the way I expected because of the economy but I have plans to get another shipping next year. So I will let you know and we will keep in touch.

Best regards,

Atallah Khudhager

From: info@nic-out.com
To: khudhagera@hotmail.com
Subject: RE: Information
Date: Wed, 12 Aug 2009 12:06:13 +0300

Hello Atallah,

How are you? I hope you are doing well!

What about Nic-out business in your region?

000088

Thanks,

Alex

From: ??????? ???? [mailto:khudhagera@hotmail.com]
Sent: Wednesday, March 11, 2009 2:21 AM
To: Info Nic-Out
Subject: Information

[Quoted text hidden]

Hotmail: Trusted email with powerful SPAM protection. Sign up now.

Info Nic-Out <info@nic-out.com> **Thu, Nov 5, 2009 at 02:20**
To: عطاالله خضير <khudhagera@hotmail.com>

Hello Atallah,
I am happy to talk to you again. Hope to hearing you soon.

Thanks,
Alex

2009/11/5 عطاالله خضير <khudhagera@hotmail.com>
[Quoted text hidden]

Info Nic-Out <info@nic-out.com> **Mon, Jan 4, 2010 at 05:15**
To: عطاالله خضير <khudhagera@hotmail.com>

Hello Atallah,
Happy New Year!
I
These days we have the possibility to produce 10pcs Nic-Out pack in addition to 30pcs.

If you are interested then contact me please.

Thanks,
Alex

2009/11/5 عطاالله خضير <khudhagera@hotmail.com>
> Hi Alex,
> [Quoted text hidden]

عطاالله خضير <khudhagera@hotmail.com> **Tue, Jan 5, 2010 at 19:26**
To: Info Nic-Out <info@nic-out.com>

Hi Alex,
Happy New Year too!

000089

I am always interested in Nic-Out. I am just hoping you could give us the same deal, for later this year. I am

planning on doing a new purchase this July. We are just waiting to finish the product we have left and we know also the import law is supossed to be changed by then. So, I'll be in touch soon.

Best regards,
Atallah

From: info@nic-out.com
Date: Mon, 4 Jan 2010 11:15:21 +0200
Subject: Re: Information
To: khudhagera@hotmail.com
[Quoted text hidden]

Info Nic-Out <info@nic-out.com> **Wed, Jan 6, 2010 at 02:51**
To: عطاالله خضير <khudhagera@hotmail.com>

Hi,
Be in contact with me please!

Thanks,
Alex

2010/1/6 عطاالله خضير <khudhagera@hotmail.com>
[Quoted text hidden]

000090

PART-1

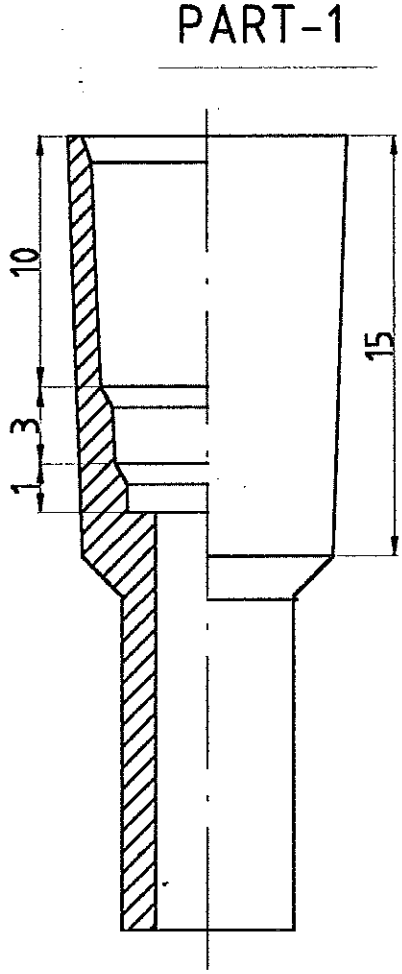

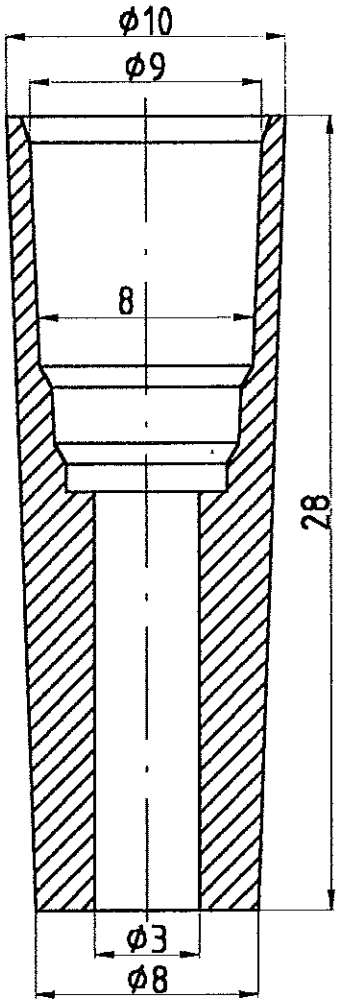

PART-2

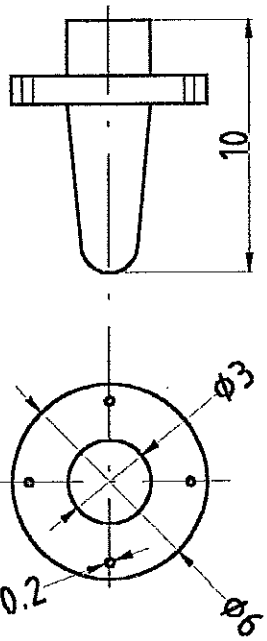

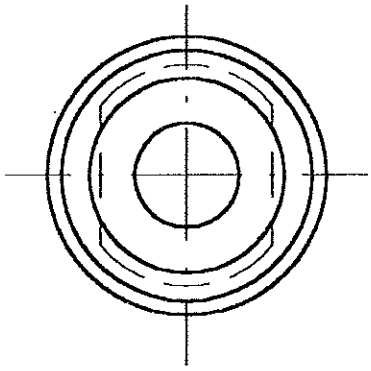

Cigarette Filter

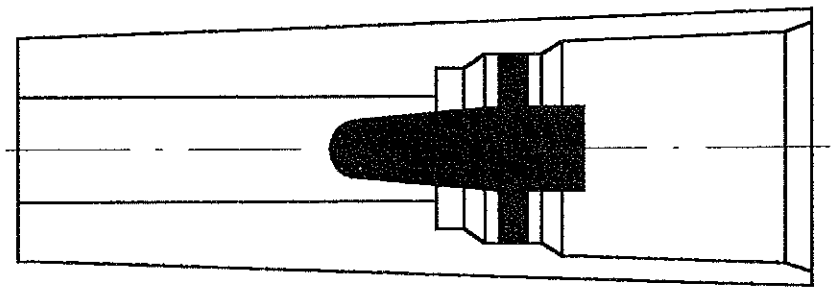

000091

Nic-ONE

P1: common body P2: movable part	Many stage cigarette filter for smoker	BG/6412-01		
Plastic material	Property of P.Service (Israel)			1999

Ben-Gurion University of the Negev
Environmental Engineering Unit
Environmental Analytical Laboratory (EAL)
Rotem Industrial Park, Mishor Yamin, ISRAEL 86800
Tel. +972-8-6571331, Fax +972-8-6571332

25 April 2002

P. Service
10, Mapo St.
Beer Sheva ISRAEL

Cigarettes filter (Nic Out) - analysis report

A box containing cigarettes filters (Nic-Out), was sent to the lab by Ms. Sabina Felix, head of materials charachterization unit of the BGU . It was received in our lab. on 25th of April 2002. Two filters were sampled and designated: 02-416 and 02-417. The first filter was crushed and the second stayed intact. Both samples were extracted, in nitric acid for half an hour , immersed in an ultrasonic bath. The extract was diluted and an internal standard was added.
The diluted extracts were anlysed using an ICPMS system (TJA PQ3 model), standardized with Spex multielement solution no. 2 .

The content of heavy metals in the filters (both filters sampled), is as follows:

Zinc	- less than 0.02 mg/Kg .
Cadmium	- less than 0.05 mg/Kg .
Lead	- less than 0.05 mg/Kg .

Sincerely yours,

Zvi Goldbart
Head, Analytical Service
EAL

Cc: Ms. Sabina Felix, Head of materials charachterization unit of the BGU .

000092

Arista LABORATORIES

Nic-Out
Disposable Cigarette Filters
Test Report – May 2003

Run#	Port#	Client Code	Modification	Arista Code	Puffs/Cigt	MS TPM (mg/cigt)	CO (mg/cigt)	Water (mg/cigt)	Nicotine (mg/cigt)	Tar (mg/cigt)
1	B	Marlboro FF KS	No Nic-Out Filter	1543-1	8.3	18.0	13.5	2.42	0.98	14.6
1	I	Marlboro FF KS	No Nic-Out Filter	1543-1	8.0	17.9	13.7	2.28	0.95	14.7
1	J	Marlboro FF KS	No Nic-Out Filter	1543-1	7.5	16.1	13.5	1.92	0.87	13.3
1	M	Marlboro FF KS	No Nic-Out Filter	1543-1	8.0	17.7	14.6	2.45	0.95	14.3
2	D	Marlboro FF KS	No Nic-Out Filter	1543-1	7.8	18.2	12.8	2.83	0.93	14.5
				Average	7.9	17.6	13.6	2.38	0.93	14.3
				SD	0.3	0.9	0.6	0.33	0.04	0.6
				%RSD	3.4	4.9	4.7	13.8	4.1	4.0
1	H	Marlboro FF KS	With Nic-Out Filter	1543-2	9.0	1.32	1.39	0.12	0.102	1.10
1	N	Marlboro FF KS	With Nic-Out Filter	1543-2	10.0	0.20	0.74	0.01	0.020	0.17
1	P	Marlboro FF KS	With Nic-Out Filter	1543-2	9.4	0.24	0.87	0.02	0.022	0.19
2	A	Marlboro FF KS	With Nic-Out Filter	1543-2	9.4	0.10	0.008	Nd	0.008	0.09
2	C	Marlboro FF KS	With Nic-Out Filter	1543-2	9.8	0.38	0.63	nd	0.020	0.36
				Average	9.5	0.45	0.74	0.05	0.034	0.38
				SD	0.4	0.50	0.47	0.06	0.038	0.41
				%RSD	4.1	111.1	63.5	118.9	111.0	107.6
1	C	Marlboro Ultra Lights	No Nic-Out Filter	1544-1	7.5	7.46	8.69	0.61	0.48	6.37
1	E	Marlboro Ultra Lights	No Nic-Out Filter	1544-1	7.1	6.74	8.91	0.54	0.44	5.76
1	L	Marlboro Ultra Lights	No Nic-Out Filter	1544-1	7.0	6.34	8.38	0.43	0.42	5.50
1	Q	Marlboro Ultra Lights	No Nic-Out Filter	1544-1	7.1	6.70	8.63	0.45	0.43	5.81
2	B	Marlboro Ultra Lights	No Nic-Out Filter	1544-1	7.8	7.34	8.24	0.60	0.47	6.26
				Average	7.3	6.92	8.57	0.53	0.45	5.94
				SD	0.4	0.47	0.26	0.08	0.03	0.37
				%RSD	4.8	6.8	3.1	15.8	6.2	6.2
1	A	Marlboro Ultra Lights	With Nic-Out Filter	1544-2	9.6	nd	0.04	0.17	nd	nd
1	F	Marlboro Ultra Lights	With Nic-Out Filter	1544-2	8.8	0.88	0.66	0.08	0.006	0.79
1	O	Marlboro Ultra Lights	With Nic-Out Filter	1544-2	8.6	1.00	1.62	0.01	0.066	0.92
1	S	Marlboro Ultra Lights	With Nic-Out Filter	1544-2	8.4	nd	0.39	0.01	Nd	Nd
2	E	Marlboro Ultra Lights	With Nic-Out Filter	1544-2	8.0	0.14	0.61	0.02	0.006	0.12
				Average	8.7	0.67	0.66	0.06	0.026	0.61
				SD	0.6	0.47	0.59	0.07	0.035	0.43
				%RSD	6.8	69.2	88.5	117.2	133.2	70.6
1	D	KY2R4F	No Nic-Out Filter	2R4F	8.7	10.5	13.5	1.02	0.68	8.80
1	G	KY2R4F	No Nic-Out Filter	2R4F	8.7	11.3	12.2	1.04	0.72	9.54
1	K	KY2R4F	No Nic-Out Filter	2R4F	8.8	10.9	13.6	0.88	0.70	9.35
1	R	KY2R4F	No Nic-Out Filter	2R4F	8.3	11.2	12.8	1.09	0.72	9.41
1	T	KY2R4F	No Nic-Out Filter	2R4F	9.5	11.7	14.0	1.03	0.76	9.89
				Average	8.8	11.1	13.2	1.01	0.72	9.40
				SD	0.4	0.4	0.7	0.08	0.03	0.39
				%RSD	4.9	3.9	5.6	7.7	4.2	4.2
			Limit of Detection:						0.001	
			Limit of Quantitation:						0.003	

ARISTA LABORATORIES
[illegible] Boulevard, Richmond, VA [illegible]
Tel: [illegible] Fax: [illegible]

P. Service

INVOICE № 1654NC02

CONTRACT/ORDER:	**№ 765**
ORDER DATE:	**08/17/2007**
PRODUCT:	**NIC-OUT CIGARETTE HOLDERS**
QUANTITY:	**25 master-case(MC)**
SHIP TO:	**Product Source International LLC**
ADDRESS:	**Product Source International LLC** **13 Coleman Rd. Berlin, NJ, 08009, USA**
PHONE:	**Tel: (856) 753-8127**
FAX:	**Fax: (856) 753-3713**
BEGIN SHIP DATE:	**05/29/2007**
SHIPPING TERMS:	**CIF Philadelphia, USA**
SHIP VIA:	**AIR**
WHOLESALE PRICE:	**$15,480.00**

QUANTITY/UNITS TRANSPORTATION	DESCRIPTION	UNIT PRICE US$	TOTAL US$
720 (PER "MC") x 25 MC = (18,000 units)	CIGARETTE HOLDERS "NIC-OUT"	$0.86	**15,480.40**

PRICE BASE:	**CIF Philadelphia, USA**
COUNTRY OF ORIGIN:	ISRAEL
HARMONIZED CODE:	9614908000 (Plastic Cigarette Holder with filtering insert)
PACKING:	Items are packed in the single packs, cartons, master-cases
LABELS:	English
SHIPMENT:	Within 8 days from order date
PAYMENT TERMS:	Bank Transfer of funds Bank: LEUMI. 922 MERKAZ HANEGEV 54 BEER-SHEVA. ISRAEL Account: 013872/68 "P.SERVICE" Swift code : LUMI-ILI TTLV
OTHER CONDITIONS:	Merchandise remains the property of P. Service until this invoice is paid in full.
RETURNS:	Claims required within 10 days. No returns accepted or credit issued without previous written consent.

Nahshin Leonid
Executive Director
P. SERVICE

P. SERVICE NIC-OUT ISRAEL

Hazvi st., 153/36
Beer-Sheva, Israel
www.nic-out.com
info@nic-out.com
Tel/Fax:+(972)864-21322

1100 Raymond Boulevard
Newark, NJ 07102

U.S. Customs and Border Protection

ENF:-4-02 AD: N/NY: FPF AC
CN: 2009-4601-001008-01

East Coast Traders
1 Entin Road, 7B
Clifton, New Jersey 07014

AUG 19 2009

Dear Sir or Madam:

This is to officially notify you that the U.S. Customs and Border Protection seized the following merchandise described below at Newark, NJ on August 5, 2009:

420 ea. Counterfeit "Nic-Out" cigarette filters and 900 ea. Non-IPR "Super Stop" cigarette filters domestically valued at $635.00

The counterfeit merchandise was seized and is subject to forfeiture under the provisions of Title 19, United States Code, section 1526(e) and Title 19, Code of Federal Regulations, section 133 because this merchandise is a counterfeit/unlicensed version of the trademark protected products which are registered with the United States Government. The non-IPR merchandise was seized and is subject to forfeiture under the provision of Title 19, United States Code, section 1595a(a) for facilitating the illegal importation or attempted importation of the counterfeit merchandise.

Unless we receive from the trademark owner(s), within 30 days from the date of this letter, written consent to the importation, exportation, entry after obliteration, or other appropriate disposition of the articles, or a petition for relief as described below, the merchandise will be forfeited and disposed of in accordance with title 19, Code of Federal Regulations, section 133.52.

Under the provisions of title 19, United States Code, section 1618, and section 171.12(b) of the Customs Regulations (19 CFR 171.12(b)), you may petition for relief from the above liability within 30 days from the date of this letter. The petition need not be in any specific form, but it should include all the facts, which you believe warrant relief from forfeiture. All petitions should be filed in duplicate and addressed to U.S. Customs and Border Protection, Attn: FP&F Office, 1100 Raymond Blvd., 5th Floor, Newark, NJ 07102.

All correspondence must include the above-referenced seizure case number. You may assent to an administrative forfeiture of the property by checking the second box, signing and returning the enclosed Election of Proceedings Form in which case this office will

dispose of the property without further action. The enclosed Notice of Seizure explains your options with regard to the remission of the forfeiture and possible return to you of the seized property.

If you decide to petition for relief, you must check the first box on the enclosed Election of Proceeding/Waiver form indicating that you wish this office to consider your petition administratively. Checking the second box indicates that you desire Customs to begin appropriate forfeiture proceedings. No matter which box you check, you must also sign and return the form.

If you have any further questions regarding this matter, please contact Ms. Anita Czajkowski of my staff at (973) 368-6076. Our fax number is (973) 368-6082. Please be advised that this office cannot telephone internationally.

Sincerely,

Edward P. Nagle
Director
Office of Fines Penalties and Forfeitures
Newark/New York Area

Encl.: AF-30

burda ticaret

The Nic-out Cigarette Filters are flying with BRITISH AIRWAYS BA-677

Airwaybill Nr. is 125-8426-0886

Will be in NewYork on 02/April.

Regards
Kadir

Please send your answer at the e-mail

Kerestecilar Sitesi Fatih Cad. Caviz Sok. No: 12 / 2 Merter - Istanbul / TÜRKİYE
Tel: +90 (212) 557 25 48 - 555 02 23 - 556 64 21 Fax: +90 (212) 677 54 03
e-mail : burdaticaret@superonline.com

YAHOO! Mail

Yahoo! - My Yahoo! - Help

YOUR FAMILY COAT OF ARMS
FREE SEARCH! LAST NAME GO!

Mail | Addresses | Calendar | Notepad

nic_out@yahoo.com [Sign Out]

Check Mail | Compose

Mail Upgrades - Search Mail - Mail Options

Folders [Add]
Inbox (2)
Draft
Sent
Bulk (1) [Empty]
Trash [Empty]

Free Credit Report
Find Old Friends
Free instant fax number for Y! Mail
Sell a Home For Top $

This message is not flagged. [Flag Message - Mark as Unread]

Date: Mon, 16 Sep 2002 09:06:01 -0700 (PDT)

From: "NSC" <abali_nm@yahoo.com> | This is Spam | Add to Address Book

Subject: N.Maslov -- BAR CODE

To: "Victor Davydov" <nic_out@yahoo.com>

SEE ATTACHMENT, PLEASE.

=====
With best regards,
Nikolai Maslov
Tel: 1-718-796-4820
Fax: 1-718-543-4587
Please, confirm your receipt of this message.

Do you Yahoo!?
Yahoo! News - Today's headlines
http://news.yahoo.com

Attachment

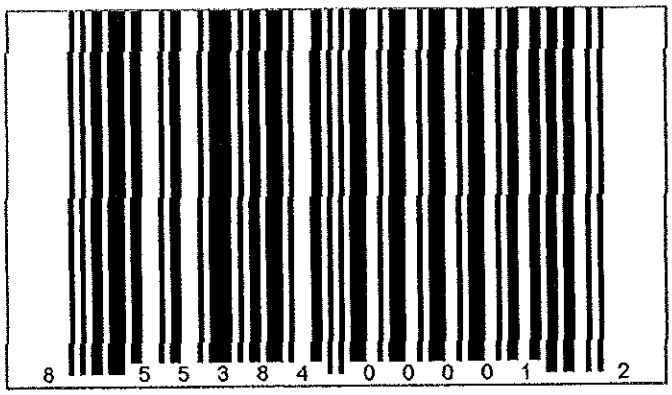

Scan for Viruses
Save to my Yahoo! Photos
Download Without Scan

000098

1_Pack_Nic_Out_Bar_Code_jpg300.jpg
.jpg file, 1281x1, 106k

לשימוש הלשכה
For Office Use

מספר: Number	151387
תאריך: Date	21-08-2002
חוקדם/נדחה Ante/Post-dated	

חוק הפטנטים, התשכ"ז-1967
PATENTS LAW, 5727-1967

בקשה לפטנט
Application for Patent

אני, (שם המבקש, מענו – ולגבי גוף מאוגד – מקום התאגדותו)
I (Name and address of applicant, and, in case of a body corporate, place of incorporation)

נחשין לאוניד

הצבי 153\36
באר-שבע

בעל אמצאה מכח "פ.סרוויס" ששמה הוא:
Owner, by virtue of "P.SERVICE" of an invention, the title of which is:

(בעברית) (Hebrew) פילטר סיגריות "Nic-Out"

(באנגלית) (English) CIGARETTE FILTER HOLDER – "NIC-OUT"

מבקש בזאת כי ינתן לי עליה פטנט.
hereby apply for a patent to be granted to me in respect thereof.

* בקשת חלוקה – Application for Division	* בקשת פטנט מוסף – Application for Patent of Addition	* דרישת דין קדימה Priority Claim		
מבקשת פטנט from Application	* לבקשת/לפטנט to Patent/Appl.	מספר/סימן Number/Mark	תאריך Date	מדינת האיגוד Convention Country
No. ____ מס'	No. ____ מס'			
dated ____ מיום	dated ____ מיום			

* יפוי כח: כללי/מיוחד – רצוף בזה / עוד יוגש
P.O.A.: general / specific – attached / to be filed later –

Has been filed in case ____ הוגש בענין

המען למסירת הודעות ומסמכים בישראל
Address for Service in Israel
____ נחשין לאוניד
____ הצבי 153\36
____ באר-שבע

חתימת המבקש
Signature of Applicant

חיום ____ בחודש ____ שנת ____ 199
This ____ of ____ 199

לשימוש הלשכה
For Office Use

000099

טופס זה, כשהוא מוטבע בחותם לשכת הפטנטים ומושלם במספר ובתאריך ההגשה, הינו אישור להגשת הבקשה שפרטיה רשומים לעיל.
This form, impressed with the Seal of the Patent Office and indicating the number and date of filing, certifies the filing of the application, the particulars of which are set out above.

* מחק את המיותר
Delete whatever is inapplicable

Пасиб

от А. Маслова

Product Source
International LLC
13 Coleman Rd.
Berlin, NJ 08009

Purchase No. Nic-11

PURCHASE ORDER

Customer
Name Eugene Higgins - PSI-LLC
Address 13 Coleman Rd.
City Berlin State NJ ZIP 08009
Phone 856-753-8127

Date 6/29/2004
Order No. Nic-11
Rep Eugene Higgins
Tel. No. 856-753-8127

Qty	Description	Unit Price	TOTAL
15,600	Packs of Nic-Out (total 21 master cartons and 24 inner cartons) Order must be picked-up on 17 July 2004 Please Ship to: FDC Fulfillment 720 Anderson Ave. St Cloud MN. 56303 Please mark all Master Cartons & Ship Bill with the following information: 1. Item: Nic Out 30 Pack 2. Quantity (no. of units) 3. Customers PO# 116276 4. SKU No. 2C09	$1.25	$19,500.00

Payment Details
○
○
◉
#VALUE!
Name
CC # Cash
Check

SubTotal	$19,500.00
Shipping & Handling	
Taxes State	
TOTAL	$19,500.00

Office Use Only

3713

FAX 014856753 3713

000100

9000

OF H. Macnab

Product Source International LLC

13 Coleman Rd.
Berlin, NJ 08009

Purchase No. Nic-19

PURCHASE ORDER

Customer

Name Eugene Higgins - PSI-LLC
Address 13 Coleman Rd.
City Berlin State NJ ZIP 08009
Phone 856-753-8127

Date 7/9/2004
Order No. 164895
Rep Eugene Higgins
Tel. No. 856-753-8127

Qty	Description	Unit Price	TOTAL
2,000	Packs of Nic-Out Please Ship 7/12/04	$1.60	$3,000.00
	Please Ship to: AMM Direct LLC. Healthy Catalog 6864 Engle Rd.		
	Please mark all Master Cartons & Ship Bill with the following information: 1. Item: Nic-Out 2. Quantity (no. of units) 3. Customers PO# 164895 4. SKU No. 2784400000		
		SubTotal	
		Shipping & Handling	
		Taxes State	
		TOTAL	$3,000.00

Payment Details #VALUE!

- ○ Check
- ○ Credit Card
- ◉

Office Use Only

000101

CONTRACT

18.08.00

SIDE A

as SELLER

BURDA TİCARET
Keresteciler Sitesi,Ceviz Sokak 12/2
Merter –İstanbul /Türkiye
Tel: +90(0212)557 06 86

Bank : AKBANK/Keresteciler
(BU 8/00/0004909/01-8)

SIDE B

as BUYER

P.SERVICE
Avraham Mapo 10/3
Beer Sheva /Israel
Tel:+972(7)642 13 22

Bank:LEUMİ / Beer Sheva
(924-025783/35)

Description	Quantity	Price	Total
Cigarette filters	14400 boxes	0.25 USD	3600 USD
Bulk cigarette filters	3000 pieces	0.008	24
Advertising cards	3000 pieces	0.010	30
Transport			622
Konchimento document			70
Insurance			100

TOTAL CIF TELAVIV : 4446 USD

-Only FourthousandfourhundredfortysixUSDollars-

Payment Conditions :

Advanced paid : 1000 USD
The rest 3446 USD will be paid when goods are ready

burda ticaret
Savaş DEMİRGÜÇ

000102

burda ticaret

ORIGINAL PACKING LIST

No: 2115 **16.10.2000**

P-SERVICE
Avraham Mapo 10/3
Beer Sheva / Israel

Packing	Each coli	Description	Total	Gross	Net kg
1-20	720 boxes	NIC-OUT Cigarette filters	14400 boxes	560 kg	530 kg
21		Bulk filters with advertising cards	3000 pieces	5 kg	4 kg

Total 21 colis
Gross :565 kg
Net :534 kg

Goods are Turkish origin

BURDA TİCARET
SAVAŞ DAMARGÜÇ
Fatih Cad. Ceviz Sok. No: 12 / 1-2
Keresteciler Sitesi Merter - İSTANBUL
Merter V. D. 269 003 1824

Commercial VALUE

000103

DOLAŞIM SERTİFİKASI

MOVEMENT CERTIFICATE

1. İhracatçı (Adı, Açık Adresi, Ülke) Exporter (Name, full address, country) BURDA TICARET SOKAK NUMARALI KERESTECILER SITESI ZEYTIN COD DENIZ SOK	EUR.1 NO A 0640949 Bu formun doldurmadan önce arkadaki notları okuyunuz. See notes overleaf before completing this form.
3. Malın Gönderileceği Yer (Adı, Açık Adresi, Ülke) (Tercihe Bağlı) Consignee (Name, full address, country) (Optional) P-SERVICE AVANYON HOPO 10/3 BEER SHEVA / ISRAEL	2. Certificate used in preferential trade between TURKIYE ve/and aşağıdaki tercihli ticarette kullanılan sertifikadır. ISRAEL (İlgili ülkeler, ülke grupları veya alanlarını yazınız.) (Insert appropriate countries, groups of countries or territories)
	4. Ürünlerin menşei sayılan ülke, ülkeler grubu veya alanlar *Country, group of countries or territory in which the products are considered as originating* TURKIYE
	5. Varış ülkesi veya ülkeler grubu, *Country, group of countries or territory of destination* ISRAEL
6. Taşımaya ilişkin bilgiler (Tercihe Bağlı) Transport details (Optional) BY AIR	7. Gözlemler *Remarks*

XE001867

8. *Sıra No; Kolilerin marka ve numaraları, sayı ve türleri (*); Eşyanın tanımı.* Item Number; Marks and numbers; Number and kind of packages (*); Description of goods.	9. Brüt ağırlık (kg) veya diğer ölçüler (Litre, metreküp, vb.) *Gross weight (kg) or other measure (litres, m³, etc.)*	10. Faturalar (Tercihe Bağlı) Invoices (Optional)
ADDR 1- 21 COLIES NIC-OUT CIGARETTE FILTERS BULK CIGARETTE FILTERS ADVERTISING CARDS THE GOODS ARE OF TURKISH ORIGIN 00-13693	14400 BOXES 6000 PIECES	2115 ..10.2000

11. GÜMRÜK VİZESİ CUSTOMS ENDORSEMENT	12. İHRACATÇININ BEYANI DECLARATION BY THE EXPORTER
Onaylayan Beyan Declaration İhraç Belgesi Export document (1) Form ..... No ..... Gümrük İdaresi Customs Office ..... Düzenleyen Ülke veya Alan Issuing country or territory ..... Tarih (Date) .... (İmza/signature)	Aşağıda imzası bulunan ben, yukarıda belirtilen eşyanın bu belgenin düzenlenmesi için gerekli olan koşullara uygun olduğunu beyan ederim. I, the undersigned, declare that the goods described above meet the conditions required for the issue of this certificate. Yer ve Tarih ..... İSTANBUL ..... Place and date ..... 19 EKIM 2000 BURDA TICARET SAVAS [illegible]

(*) Eşya ambalajlı değilse, yerine göre eşyanın sayısını veya "dökme" olduğunu belirtiniz.
(*) If goods are not packed, indicate number of articles or state "in bulk" as appropriate

(1) Yalnız ihracatçı ülke hususlarının geçerli olduğu yerleri doldurunuz.
(1) Complete only where the regulations of exporting country or territory require.

Tiraj: 267 11 01 • ANKARA
Kanuni Müşavir

000104

90 212 6371659
19-OCT-2000 18:42 FROM BURDA TICARET ID 90127628878787 P.01

burda ticaret

TORONTO

INVOICE 2202 09-08-2001

P-SERVICE
AVRAHAM MAPO 10/3
BEER SHEVA / ISRAEL

Description	Quantity	Price Unit	Amount
Nic-Out Cigarette Filters	**14400 packs**	**0.25 USD**	**3600 USD**
Advertising cards with filters	**3000 pcs**	**0.09 USD**	**270 USD**
Insurance			**80 USD**
Freight (Transport)			**1120 USD**
	TOTAL CIF TORONTO		**5070 USD**

-Only Fivethousandseventy USD-

Goods are Turkish Origin

Payment : Money Transfer to Sellers following bank details :

AKBANK /Keresteciler Branch
Acc no : BU 8-00-0004909-01-8 Burda Ticaret
Swift-code : AKBKTRIS AKBANK 3058615026

000105

Keresteciler Sitesi Fatih Cad. Ceviz Sok. No: 12 / 2 Merter - İstanbul / TÜRKİYE
Tel: +90 (212) 557 25 48 - 555 02 23 - 556 64 21 Fax: +90 (212) 677 54 03
e-mail : burdaticaret@superonline.com

CONTRACT NR.007 / 2002

January- 01-2002

000106

Burda Ticaret /İstanbul and **P-Service**/Israel have concluded following contract as follows:

THE CONTRACT SUBJECT

Burda Ticaret agrees to produce for P-Service min.300 coliboxes of **Nic-out Cigarette Filters** every year.Payment conditions will be agreed each time between both companies. The brandname Nic-out belongs to P-Service and Burda Ticaret may not sell Nic-out cigarette filters without permission of P-service to other companies.

The quality of goods should correspond to the presented sample.Burda Ticaret has to produce the same good quality always like the sample.

Seller

Burda Ticaret
Keresteciler Sitesi ,Ceviz Sokak 12/2
Merter –Istanbul/Turkey

Buyer

P-Service
Beer Sheva, Avraham Mapo 10/3
Israel

P. SERVICE
AVRAHAM MAPO 10/3
BEER-SHEV ISRAEL
Fax 972-7-6421322 052-752697

DRAFT

724-5721 1641 724-5721 1641

Not Negotiable

Air Waybill

Issued by

SWISS AIR

Copies 1, 2 and 3 of this Air Waybill are originals and have the same validity

It is agreed that the goods described herein are accepted in apparent good order and condition (except as noted) for carriage SUBJECT TO THE CONDITIONS OF CONTRACT ON THE REVERSE HEREOF. ALL GOODS MAY BE CARRIED BY ANY OTHER MEANS INCLUDING ROAD OR ANY OTHER CARRIER UNLESS SPECIFIC CONTRARY INSTRUCTIONS ARE GIVEN HEREON BY THE SHIPPER, AND SHIPPER AGREES THAT THE SHIPMENT MAY BE CARRIED VIA INTERMEDIATE STOPPING PLACES WHICH THE CARRIER DEEMS APPROPRIATE. THE SHIPPER'S ATTENTION IS DRAWN TO THE NOTICE CONCERNING CARRIER'S LIMITATION OF LIABILITY. Shipper may increase such limitation of liability by declaring a higher value for carriage and paying a supplemental charge if required.

Shipper's Name and Address

ATAS TUKETIM MALLARI ITRIYAT
PAZ. SAN. VE TIC. LTD STI
CUMHURIYET CAD.SEHIT ER CENGIZ
KARCIOGLU SK.NO:4 KAVACIK,BEYK
34810 ISTANBUL/TURKEY

Consignee's Account Number

SAFETY AID SUPPLIES INC.
3411 IRWIN AVENUE SUITE 6F,
BRONX,NEW YORK 10463-3749 USA
TEL:+1(646)2613366 FAX:+1(718)5434587
(FOR P-SERVICE)

Issuing Carrier's Agent Name and City

JAS FORVARDERLIK LTD.STI.
ISTANBUL

Accounting Information

FREIGHT PREPAID

07/07/310/00867

Agent's IATA Code

88-4-7154-0010

Account No.

Airport of Departure (Addr. of First Carrier) and Requested Routing

ATATURK AIRPORT

To	By First Carrier	Routing and Destination	To	By	To	By
JFK	SWISS AIR					

Reference Number

Optional Shipping Information

Currency	CHGS Code	WT/VAL PPD	WT/VAL COLL	Other PPD	Other COLL	Declared Value for Carriage	Declared Value for Custom
EUR	PP	X		X		N.V.D.	N.V.C.

Airport of Destination

JOHN F. KENNEDY INTERNATI

Requested Flight/Date

LX 1805-24/07/07

Amount of Insurance

XXX

INSURANCE - If Carrier offers insurance, and such insurance is requested in accordance with the conditions thereof, indicate amount to be insured in figures in box marked 'Amount of Insurance'.

Handling Information

SCI

No of Pieces RCP	Gross Weight	kg lb	Rate Class / Commodity Item No.	Chargeable Weight	Rate / Charge	Total	Nature and Quantity of Goods (incl. Dimensions or Volume)
30	855.00 K		Q	855.00	2.49	2,128.95	DIMS: 30/38x47x57 NIC-OUT PLASTIC CIGARETTE HOLDER WITH FILTERING INSERT
30	855.00					2,128.95	

Prepaid: Weight Charge 2,128.95 | Collect

Valuation Charge

Tax

Other Charges

FSC: EUR 213.75 AWA: EUR 30.00
MOC: EUR 30.00 SCC: EUR 128.25

Total Other Charges Due Agent: 30.00

Total Other Charges Due Carrier: 372.00

Shipper certifies that the particulars on the face hereof are correct and that insofar as any part of the consignmen contains dangerous goods, such part is properly described by name and is in proper condition for carriage by al according to the applicable Dangerous Goods Regulations

JAS FORVARDERLIK LTD.STI.

Signature of Shipper or his Agent

Total Prepaid: 2,530.95 | Total Collect

Currency Conversion Rates | CC Charges in Dest. Currency

Executed on (date): 23/07/2007 at (place): ISTANBUL

Signature of Issuing Carrier or its Agent: SAFAK AYDIN

For Carrier's Use only at Destination | Charges at Destination | Total collect Charges

W1 724-5721 1641 W0

ORIGINAL 3 (FOR SHIPPER)

P. Service

Hazvi St., 153/36
Beer-Sheva, Israel
www.nic-out.com
sales@nic-out.com
Tel/Fax:+(972)864-21322

INVOICE № 1297 NC01

CONTRACT/ORDER:	**№ 1287**
ORDER DATE:	**15/02/2007**
PRODUCT:	**NIC-OUT CIGARETTE HOLDER**
QUANTITY:	**51 master-case**
SHIP TO:	**Safety Aid Supplies, Inc.**
ADDRESS:	**Safety Aid Supplies, Inc.** **3411 Irwin Avenue, Suite 6F, Bronx,** **NY 10463-3749** **USA**
PHONE:	**++(1)6462613366**
FAX:	**++(1)7185434587**
BEGIN SHIP DATE:	
SHIPPING TERMS:	**CIF USA**
SHIP VIA:	**AIR**
WHOLESALE PRICE:	**$22,320.00**

QUANTITY/UNITS TRANSPORTATION	DESCRIPTION	UNIT PRICE US$	TOTAL US$
50 master-cases (36,000. units)	CIGARETTE HOLDERS "NIC-OUT"	$0.62	**$22,320.00**
1 master-case (21600pcs)	CIGARETTE HOLDERS "NIC-OUT" in bulk	$0.00	**$0.00**

PRICE BASE:	CIF USA
COUNTRY OF ORIGIN:	Turkey
HARMONIZED CODE:	9614.00.9890 (Plastic Cigarette Holder with filtering insert)
PACKING:	Items are packed in the single packs, cartons, master-cases
LABELS:	English
SHIPMENT:	Within 5 days from order date
PAYMENT TERMS:	Bank Transfer of funds
OTHER CONDITIONS:	Merchandise remains the property of P. Service until this invoice is paid in full.
RETURNS:	Claims required within 10 days. No returns accepted or credit issued without previous written consent.

Violetta Davidov
Executive Director
P. SERVICE

P. SERVICE NIC-OUT ISRAEL ישראל פ. סרוויס

000108

057-8030 8944 057-8030 8944

ATAS TUKETIM MALLARI ITRIYAT
PAZ. SAN. VE TIC. LTD STI
CUMHURİYET CAD.SEHIT ER CENGIZ
KARCIOGLU SK.NO:3 KAVACIK,3481
ISTANBUL-TURKEY TEL:02164258955

AIR FRANCE

SAFETY AID SUPPLIES INC.
3411 IRWIN AVENUE SUITE 6P,
BRONX,NEW YORK 10463-3749 USA
TEL:+1(646)261 3366 FAX:+1(718)5434587
(FOR P-SERVICE)

JAS FORVARDERLIK LTD.STI.
ISTANBUL

FREIGHT PREPAID

07/05/310/00540

88-4-7154-0010

ATATURK AIRPORT

JFK	AIR FRANCE	EUR	PP	X	X	N.V.D.	N.V.C.
JOHN F. KENNEDY INTERNATI	AF7035-17/05/07		XXX				

50	1,425.00 K	Q	1,425.00	2.49	3,548.25

DIMS: 50/38x47x58

NIC-OUT PLASTIC CIGARETTE
HOLDER WITH FILTERING INSERT

50 1,425.00 3,548.25

3,548.25

FSC: EUR 783.75 AWA: EUR 40.00
MOC: EUR 40.00 SCC: EUR 213.75

40.00

1,037.50

JAS FORVARDERLIK LTD.STI.

000109

4,625.75

16/05/2007 ISTANBUL SAFAK AYDIN

724-5720 1922 724-5720 1922

ATAS TUKETIM MALLARI ITRIYAT
PAZ. SAN. VE TIC. LTD STI
CUMHURİYET CAD.SEHIT ER CENGIZ
KARCIOGLU SK. NO:3 KAT:2 34810
KAVACIK/ISTANBUL/TURKEY TEL:0216425 8955

SWISS AIR

SAFETY AID SUPPLIES INC.
3411 IRWIN AVENUE SUITE 6F,
BRONX,NEW YORK 10463-3749 USA
TEL:+1(646)261 3366 FAX:+7(718)543 4587
(FOR P-SERVICE)

JAS FORVARDERLIK LTD.STI.
ISTANBUL

FREIGHT PREPAID

07/05/310/00511

88-4-7154-0010

ATATURK AIRPORT

JFK	SWISS AIR			EUR	PP	X	X	N.V.D. N.V.C.
JOHN F. KENNEDY INTERNATI	LX 1805-15/05/07				XXX			

80	2,280.00 K	Q	2,280.00	2.49	5,677.20	DIMS: 80/38x47x58
						CIGARETTE FILTERS

80	2,280.00			5,677.20	
	5,677.20	FSC: EUR	570.00	AWA: EUR	30.00
		MOC: EUR	30.00	SCC: EUR	342.00

30.00

942.00

000110

JAS FORVARDERLIK LTD.STI.

6,649.20

09/05/2007 ISTANBUL SAFAK AYDIN

P. Service

Hazvi St., 153/36
Beer-Sheva, Israel
www.nic-out.com
sales@nic-out.com
Tel/Fax:+(972)864-21322

INVOICE № 1388 NC01

CONTRACT/ORDER:	**№ 1325**
ORDER DATE:	**10/05/2007**
PRODUCT:	**NIC-OUT CIGARETTE HOLDER**
QUANTITY:	**80 master-case**
SHIP TO:	**Safety Aid Supplies, Inc.**
ADDRESS:	**Safety Aid Supplies, Inc.** **3411 Irwin Avenue, Suite 6F, Bronx,** **NY 10463-3749** **USA**
PHONE:	**++(1)6462613366**
FAX:	**++(1)7185434587**
BEGIN SHIP DATE:	
SHIPPING TERMS:	**CIF USA**
SHIP VIA:	**AIR**
WHOLESALE PRICE:	**$35,712.00**

QUANTITY/UNITS TRANSPORTATION	DESCRIPTION	UNIT PRICE US$	TOTAL US$
80 master-cases (57,600. units)	CIGARETTE HOLDERS "NIC-OUT"	$0.62	**$35,712.00**

PRICE BASE:	CIF USA
COUNTRY OF ORIGIN:	Turkey
HARMONIZED CODE:	9614.00.9890 (Plastic Cigarette Holder with filtering insert)
PACKING:	Items are packed in the single packs, cartons, master-cases
LABELS:	English
SHIPMENT:	Within 5 days from order date
PAYMENT TERMS:	Bank Transfer of funds
OTHER CONDITIONS:	Merchandise remains the property of P. Service until this invoice is paid in full.
RETURNS:	Claims required within 10 days. No returns accepted or credit issued without previous written consent.

Violetta Davidov
Executive Director
P. SERVICE

P. SERVICE * NIC-OUT ISRAEL * ישראל פ. סרוויס

000111

P. Service

Hazvi St., 153/36
Beer-Sheva, Israel
www.nic-out.com
sales@nic-out.com
Tel/Fax:+(972)864-21322

INVOICE № 1214 NC01

CONTRACT/ORDER:	**№ 1133**
ORDER DATE:	**02/02/2007**
PRODUCT:	**NIC-OUT CIGARETTE HOLDER**
QUANTITY:	**50 master-case**
SHIP TO:	**Safety Aid Supplies, Inc.**
ADDRESS:	**Safety Aid Supplies, Inc.** **3411 Irwin Avenue, Suite 6F, Bronx,** **NY 10463-3749** **USA**
PHONE:	**++(1)6462613366**
FAX:	**++(1)7185434587**
BEGIN SHIP DATE:	**7/02/2007**
SHIPPING TERMS:	**CIF USA NY**
SHIP VIA:	**Air**
WHOLESALE PRICE:	**$22,320.00**

QUANTITY/UNITS TRANSPORTATION	DESCRIPTION	UNIT PRICE US$	TOTAL US$
50 master-cases (36,000.00 units)	CIGARETTE HOLDERS "NIC-OUT"	$0.62	$22,320.00

PRICE BASE:	CIF USA
COUNTRY OF ORIGIN:	Turkey
HARMONIZED CODE:	9614908000 (Plastic Cigarette Holder with filtering insert)
PACKING:	Items are packed in the single packs, cartons, master-cases
LABELS:	English
SHIPMENT:	Within 5 days from order date
PAYMENT TERMS:	Bank Transfer of funds
OTHER CONDITIONS:	Merchandise remains the property of P. Service until this invoice is paid in full.
RETURNS:	Claims required within 10 days. No returns accepted or credit issued without previous written consent.

Violetta Davidov
Executive Director
P. SERVICE

P. SERVICE NIC-OUT ISRAEL ישראל פ. סרוויס

000112

P. Service

Hazvi St., 153/36
Beer-Sheva, Israel
www.nic-out.com
sales@nic-out.com
Tel/Fax:+(972)864-21322

INVOICE № 1418 NC01

CONTRACT/ORDER:	**№ 1524**
ORDER DATE:	**11/09/2007**
PRODUCT:	**NIC-OUT CIGARETTE HOLDER**
QUANTITY:	**40 master-case**
SHIP TO:	**Safety Aid Supplies, Inc.**
ADDRESS:	**Safety Aid Supplies, Inc.** **3411 Irwin Avenue, Suite 6F, Bronx,** **NY 10463-3749** **USA**
PHONE:	**++(1)6462613366**
FAX:	**++(1)7185434587**
BEGIN SHIP DATE:	**14/09/2007**
SHIPPING TERMS:	**CIF USA**
SHIP VIA:	**AIR**
WHOLESALE PRICE:	**$18,720.00**

QUANTITY/UNITS TRANSPORTATION	DESCRIPTION	UNIT PRICE US$	TOTAL US$
40 master-cases (28,800. 00. units)	CIGARETTE HOLDERS "NIC-OUT"	$0.65	**$18,720.00**

PRICE BASE:	CIF USA
COUNTRY OF ORIGIN:	Turkey
HARMONIZED CODE:	9614.00.9890 (Plastic Cigarette Holder with filtering insert)
PACKING:	Items are packed in the single packs, cartons, master-cases
LABELS:	English
SHIPMENT:	Within 5 days from order date
PAYMENT TERMS:	Bank Transfer of funds
OTHER CONDITIONS:	Merchandise remains the property of P. Service until this invoice is paid in full.
RETURNS:	Claims required within 10 days. No returns accepted or credit issued without previous written consent.

Violetta Davidov
Executive Director
P. SERVICE

P. SERVICE NIC-OUT ISRAEL ישראל פ. סרוויס

000113

DRAFT

724-6090 8433 724-6090 8433

Not Negotiable

Air Waybill

Issued by

SWISS AIR

Copies 1, 2 and 3 of this Air Waybill are originals and have the same validity

It is agreed that the goods described herein are accepted in apparent good order and condition (except as noted) for carriage SUBJECT TO THE CONDITIONS OF CONTRACT ON THE REVERSE HEREOF. ALL GOODS MAY BE CARRIED BY ANY OTHER MEANS INCLUDING ROAD OR ANY OTHER CARRIER UNLESS SPECIFIC CONTRARY INSTRUCTIONS ARE GIVEN HEREON BY THE SHIPPER, AND SHIPPER AGREES THAT THE SHIPMENT MAY BE CARRIED VIA INTERMEDIATE STOPPING PLACES WHICH THE CARRIER DEEMS APPROPRIATE. THE SHIPPER'S ATTENTION IS DRAWN TO THE NOTICE CONCERNING CARRIER'S LIMITATION OF LIABILITY. Shipper may increase such limitation of liability by declaring a higher value for carriage and paying a supplemental charge if required.

Shipper's Name, Address

ATAS TUKETIM MALLARI ITRIYAT
PAZ. SAN. VE TIC. LTD STI
CUMHURIYET CAD.SEHIT ER CENGIZ
KARCIOGLU NO:4 KAVACIK,BEYKOZ
34810 ISTANBUL/TURKEY

Shipper's Account Number

Consignee's Account Number

SAFETY AID SUPPLIES INC.
3411 IRWIN AVENUE SUITE 6F,
BRONX,NEW YORK 10463-3749 USA
TEL:+1(646)2613366 FAX:+1(718)543 4587
(FOR P-SERVICE)

Issuing Carrier's Agent Name and City

JAS FORVARDERLIK LTD.STI.
ISTANBUL

Accounting Information

FREIGHT PREPAID

07/09/310/01070

Agent's IATA Code

88-4-7154-0010

Account No.

Airport of Departure (Addr. of First Carrier) and Requested Routing

ATATURK AIRPORT

Reference Number

Optional Shipping Information

To	By First Carrier	Routing and Destination	To	By	To	By	Currency	CHGS Code	WT/VAL PPD	WT/VAL COLL	Other PPD	Other COLL	Declared Value for Carriage	Declared Value for Custom
JFK	SWISS AIR						EUR	PP	X		X		N.V.D.	N.V.C.

Airport of Destination

JOHN F. KENNEDY INTERNATI

Requested Flight/Date

LX 1805-14/09/07

Amount of Insurance

XXX

INSURANCE - If Carrier offers insurance, and such insurance is requested in accordance with the conditions thereof, indicate amount to be insured in figures in box marked 'Amount of Insurance'.

Handling Information

SCI

No of Pieces RCP	Gross Weight	kg lb	Rate Class / Commodity Item No.	Chargeable Weight	Rate / Charge	Total	Nature and Quantity of Goods (incl. Dimensions or Volume)
40	1,140.00 K		Q	1,140.00	2.49	2,838.60	DIMS: 40/38x47x58 NIC-OUT PLASTIC CIGARETTE HOLDER WITH FILTERING INSERT
40	1,140.00					2,838.60	

Prepaid: 2,838.60

Weight Charge

Collect

Valuation Charge

Tax

Total Other Charges Due Agent: 30.00

Total Other Charges Due Carrier: 486.00

Total Prepaid: 3,354.60

Total Collect

Currency Conversion Rates

CC Charges in Dest. Currency

For Carrier's Use only at Destination

Charges at Destination

Total collect Charges

Other Charges

FSC: EUR 285.00 AWA: EUR 30.00
MOC: EUR 30.00 SCC: EUR 171.00

000114

Shipper certifies that the particulars on the face hereof are correct and that insofar as any part of the consignmen contains dangerous goods, such part is properly described by name and is in proper condition for carriage by al according to the applicable Dangerous Goods Regulations

JAS FORVARDERLIK LTD.STI.

Signature of Shipper or his Agent

11/09/2007 (date) ISTANBUL (place) SAFAK AYDIN

Executed on at Signature of Issuing Carrier or its Agent

W1 724-6090 8433 W0

ORIGINAL 3 (FOR SHIPPER)

P. Service

Hazvi st., 153/36
Beer-Sheva, Israel
www.nic-out.com
sales@nic-out.com
Tel/Fax:+(972)864-21322

INVOICE № 1141NC01

CONTRACT/ORDER:	**№ 952**
ORDER DATE:	**11/10/2006**
PRODUCT:	**NIC-OUT CIGARETTE HOLDER**
QUANTITY:	**30 master-case**
SHIP TO:	**Safety Aid Supplies, Inc.**
ADDRESS:	**Safety Aid Supplies, Inc. USA** **3411 Irwin avenue, Suite 6F, Bronx, NY 10463**
PHONE:	**++(1)6462613366**
FAX:	**++(1)7185434587**
BEGIN SHIP DATE:	**20/10/2006**
SHIPPING TERMS:	**CIF USA**
SHIP VIA:	**AIR**
WHOLESALE PRICE:	**$13,392.00**

QUANTITY/UNITS TRANSPORTATION	DESCRIPTION	UNIT PRICE US$	TOTAL US$
30 master-cases (21,600.00 units)	CIGARETTE HOLDERS "NIC-OUT"	$0.62	$13,,392.00

PRICE BASE:	CIF USA
COUNTRY OF ORIGIN:	Turkey
HARMONIZED CODE:	9614908000 (Plastic Cigarette Holder with filtering insert)
PACKING:	Items are packed in the single packs, cartons, master-cases
LABELS:	English
SHIPMENT:	Within 5 days from order date
PAYMENT TERMS:	Bank Transfer of funds
OTHER CONDITIONS:	Merchandise remains the property of P. Service until this invoice is paid in full.
RETURNS:	Claims required within 10 days. No returns accepted or credit issued without previous written consent.

Violetta Davidov
Executive Director
P. SERVICE

P. SERVICE NIC-OUT ISRAEL ישראל פ. סרוויס

000116

P. Service

Hazvi St., 153/36
Beer-Sheva, Israel
www.nic-out.com
sales@nic-out.com
Tel/Fax:+(972)864-21322

INVOICE № 1042NC01

CONTRACT/ORDER:	**№ 744**
ORDER DATE:	**13/07/2006**
PRODUCT:	**NIC-OUT CIGARETTE HOLDER**
QUANTITY:	**20 master-case**
SHIP TO:	**Safety Aid Supplies, Inc.**
ADDRESS:	**Safety Aid Supplies, Inc. USA** **3411 Irwin avenue, Suite 6F, Bronx, NY 10463**
PHONE:	**++(1)6462613366**
FAX:	**++(1)7185434587**
BEGIN SHIP DATE:	**17/07/2006**
SHIPPING TERMS:	**CIF USA**
SHIP VIA:	**AIR**
WHOLESALE PRICE:	**$8,928.00**

QUANTITY/UNITS TRANSPORTATION	DESCRIPTION	UNIT PRICE US$	TOTAL US$
20 master-cases (14,400.00 units)	CIGARETTE HOLDERS "NIC-OUT"	$0.62	$8,,928.00

PRICE BASE:	CIF USA
COUNTRY OF ORIGIN:	Turkey
HARMONIZED CODE:	9614908000 (Plastic Cigarette Holder with filtering insert)
PACKING:	Items are packed in the single packs, cartons, master-cases
LABELS:	English
SHIPMENT:	Within 5 days from order date
PAYMENT TERMS:	Bank Transfer of funds
OTHER CONDITIONS:	Merchandise remains the property of P. Service until this invoice is paid in full.
RETURNS:	Claims required within 10 days. No returns accepted or credit issued without previous written consent.

Violetta Davidov
Executive Director
P. SERVICE

P. SERVICE NIC-OUT ISRAEL ישראל פ. סרוויס

000116

P. Service

Hazvi st., 153/36
Beer-Sheva, Israel
www.nic-out.com
sales@nic-out.com
Tel/Fax:+(972)864-21322

INVOICE № 1012NC01

CONTRACT/ORDER:	**№ 714**
ORDER DATE:	**3/05/2006**
PRODUCT:	**NIC-OUT CIGARETTE HOLDER**
QUANTITY:	**20 master-case**
SHIP TO:	**Safety Aid Supplies, Inc.**
ADDRESS:	**Safety Aid Supplies, Inc. USA** **3411 Irwin avenue, Suite 6F, Bronx, NY 10463**
PHONE:	**++(1)6462613366**
FAX:	**++(1)7185434587**
BEGIN SHIP DATE:	**22/05/2006 (AWB 724-51614404)**
SHIPPING TERMS:	**CIF USA**
SHIP VIA:	**AIR**
WHOLESALE PRICE:	**$8,928.00**

QUANTITY/UNITS TRANSPORTATION	DESCRIPTION	UNIT PRICE US$	TOTAL US$
20 master-cases (14,400.00 units)	CIGARETTE HOLDERS "NIC-OUT"	$0.62	$8,,928.00

PRICE BASE:	CIF USA
COUNTRY OF ORIGIN:	ISRAEL
HARMONIZED CODE:	9614908000 (Plastic Cigarette Holder with filtering insert)
PACKING:	Items are packed in the single packs, cartons, master-cases
LABELS:	English
SHIPMENT:	Within 5 days from order date
PAYMENT TERMS:	Bank Transfer of funds
OTHER CONDITIONS:	Merchandise remains the property of P. Service until this invoice is paid in full.
RETURNS:	Claims required within 10 days. No returns accepted or credit issued without previous written consent.

Violetta Davidov
Executive Director
P. SERVICE

P. SERVICE NIC-OUT ISRAEL ישראל פ. סרוויס

000117

P. Service

Hazvi st., 153/36
Beer-Sheva, Israel
www.nic-out.com
sales@nic-out.com
Tel/Fax:+(972)864-21322

INVOICE № 1172NC01

CONTRACT/ORDER:	**№ 983**
ORDER DATE:	**07/11/2006**
PRODUCT:	**NIC-OUT CIGARETTE HOLDER**
QUANTITY:	**30 master-case**
SHIP TO:	**Safety Aid Supplies, Inc.**
ADDRESS:	**Safety Aid Supplies, Inc. USA** **3411 Irwin avenue, Suite 6F, Bronx, NY 10463**
PHONE:	**++(1)6462613366**
FAX:	**++(1)7185434587**
BEGIN SHIP DATE:	**17/11/2006**
SHIPPING TERMS:	**CIF USA**
SHIP VIA:	**AIR**
WHOLESALE PRICE:	**$13,392.00**

QUANTITY/UNITS TRANSPORTATION	DESCRIPTION	UNIT PRICE US$	TOTAL US$
30 master-cases (21,600.00 units)	CIGARETTE HOLDERS "NIC-OUT"	$0.62	$13,,392.00

PRICE BASE:	CIF USA
COUNTRY OF ORIGIN:	Turkey
HARMONIZED CODE:	9614908000 (Plastic Cigarette Holder with filtering insert)
PACKING:	Items are packed in the single packs, cartons, master-cases
LABELS:	English
SHIPMENT:	Within 5 days from order date
PAYMENT TERMS:	Bank Transfer of funds
OTHER CONDITIONS:	Merchandise remains the property of P. Service until this invoice is paid in full.
RETURNS:	Claims required within 10 days. No returns accepted or credit issued without previous written consent.

Violetta Davidov
Executive Director
P. SERVICE

P. SERVICE NIC-OUT ISRAEL ישראל פ. סרוויס

000118

P. Service

Hazvi st., 153/36
Beer-Sheva, Israel
www.nic-out.com
sales@nic-out.com
Tel/Fax:+(972)864-21322

INVOICE № 1112NC01

CONTRACT/ORDER:	**№ 921**
ORDER DATE:	**29/08/2006**
PRODUCT:	**NIC-OUT CIGARETTE HOLDER**
QUANTITY:	**20 master-case**
SHIP TO:	**Safety Aid Supplies, Inc.**
ADDRESS:	**Safety Aid Supplies, Inc. USA** **3411 Irwin avenue, Suite 6F, Bronx, NY 10463**
PHONE:	**++(1)6462613366**
FAX:	**++(1)7185434587**
BEGIN SHIP DATE:	**7/09/2006**
SHIPPING TERMS:	**CIF USA**
SHIP VIA:	**AIR**
WHOLESALE PRICE:	**$8,928.00**

QUANTITY/UNITS TRANSPORTATION	DESCRIPTION	UNIT PRICE US$	TOTAL US$
20 master-cases (14,400.00 units)	CIGARETTE HOLDERS "NIC-OUT"	$0.62	$8,,928.00

PRICE BASE:	CIF USA
COUNTRY OF ORIGIN:	Turkey
HARMONIZED CODE:	9614908000 (Plastic Cigarette Holder with filtering insert)
PACKING:	Items are packed in the single packs, cartons, master-cases
LABELS:	English
SHIPMENT:	Within 5 days from order date
PAYMENT TERMS:	Bank Transfer of funds
OTHER CONDITIONS:	Merchandise remains the property of P. Service until this invoice is paid in full.
RETURNS:	Claims required within 10 days. No returns accepted or credit issued without previous written consent.

Violetta Davidov
Executive Director
P. SERVICE

P. SERVICE NIC-OUT ISRAEL ישראל פ. סרוויס

000119

724-5388 4283 724-5388 4283

ATAS TUKETIM MALLARI ITRIYAT
PAZ. SAN. VE TIC. LTD STI
CUMHURİYET CAD.SEHIT ER CENGIZ
KARCIOGLU NO:3 KAT:2 KAVACIK
ISTANBUL

SWISS AIR

SAFETY AID SUPPLIES INC.

4611 12.TH AVENUE 60
BROOKLYN 11219 NEW YORK USA
(FOR P-SERVICE)

JAS FORVARDERLIK LTD.STI.
ISTANBUL

FREIGHT PREPAID

06/12/310/01405

88-4-7154-0010

ATATURK AIRPORT

NYC	SWISS AIR			EUR	PP	X	X	N.V.D. N.V.C.
NEW YORK		LX 1805-30/12/06			XXX			

20	530.00 K	Q	530.00	2.49	1,319.70	DIMS: 20/38x47x58
						CIGARETTE FILTERS

20	530.00			1,319.70	
	1,319.70	FSC: EUR	132.50	AWA: EUR	30.00
		MOC: EUR	30.00	SCC: EUR	79.50

30.00

242.00

1,591.70

JAS FORVARDERLIK LTD.STI.

30/12/2006 ISTANBUL FUAT KARASU

P. Service

Hazvi St., 153/36
Beer-Sheva, Israel
www.nic-out.com
sales@nic-out.com
Tel/Fax:+(972)864-21322

INVOICE № 1193 NC01

CONTRACT/ORDER:	**№ 1112**
ORDER DATE:	**25/12/2006**
PRODUCT:	**NIC-OUT CIGARETTE HOLDER**
QUANTITY:	**70 master-case**
SHIP TO:	**Safety Aid Supplies, Inc.**
ADDRESS:	**Safety Aid Supplies, Inc.** **3411 Irwin Avenue, Suite 6F, Bronx,** **NY 10463-3749** **USA**
PHONE:	**++(1)6462613366**
FAX:	**++(1)7185434587**
BEGIN SHIP DATE:	**29/12/2006**
SHIPPING TERMS:	**CIF USA**
SHIP VIA:	**The Ship**
WHOLESALE PRICE:	**$26,712.00**

QUANTITY/UNITS TRANSPORTATION	DESCRIPTION	UNIT PRICE US$	TOTAL US$
70 master-cases (50,400.00 units)	CIGARETTE HOLDERS "NIC-OUT"	$0.53	$26,712.00

PRICE BASE:	CIF USA
COUNTRY OF ORIGIN:	Turkey
HARMONIZED CODE:	9614908000 (Plastic Cigarette Holder with filtering insert)
PACKING:	Items are packed in the single packs, cartons, master-cases
LABELS:	English
SHIPMENT:	Within 5 days from order date
PAYMENT TERMS:	Bank Transfer of funds
OTHER CONDITIONS:	Merchandise remains the property of P. Service until this invoice is paid in full.
RETURNS:	Claims required within 10 days. No returns accepted or credit issued without previous written consent.

Violetta Davidov
Executive Director
P. SERVICE

P. SERVICE
NIC-OUT
ISRAEL
ישראל
פ. סרוויס

000121

P. Service

Hazvi st., 153/36
Beer-Sheva, Israel
www.nic-out.com
sales@nic-out.com
Tel/Fax:+(972)864-21322

INVOICE № 971NC01

CONTRACT/ORDER:	**№ 404**
ORDER DATE:	**31 January 2006**
PRODUCT:	**NIC-OUT CIGARETTE FILTERS**
QUANTITY:	**20 master-case**
SHIP TO:	**Safety Aid Supplies, Inc.**
ADDRESS:	**Safety Aid Supplies, Inc. USA** **3411 Irwin avenue, Suite 6F, Bronx, NY 10463**
PHONE:	**++(1)6462613366**
FAX:	**++(1)7185434587**
BEGIN SHIP DATE:	**6 February2006**
SHIPPING TERMS:	**CIF USA**
SHIP VIA:	**AIR**
WHOLESALE PRICE:	**$8,928.00**

QUANTITY/UNITS TRANSPORTATION	DESCRIPTION	UNIT PRICE US$	TOTAL US$
20 master-cases (14,400.00 units)	CIGARETTE FILTERS "NIC-OUT"	$0.62	$8,928.00

PRICE BASE:	CIF USA
COUNTRY OF ORIGIN:	ISRAEL
HARMONIZED CODE:	9614908000 (Plastic Cigarette Holder with filtering insert)
PACKING:	Items are packed in the single packs, cartons, master-cases
LABELS:	English
SHIPMENT:	Within 5 days from order date
PAYMENT TERMS:	Bank Transfer of funds
OTHER CONDITIONS:	Merchandise remains the property of P. Service until this invoice is paid in full.
RETURNS:	Claims required within 10 days. No returns accepted or credit issued without previous written consent.

Violetta Davidov
Executive Director
P. SERVICE

P. SERVICE NIC-OUT ISRAEL ישראל פ. סרוויס

000122

Document Description: **Offc Action Outgoing**
Mail / Create Date: **07-Jul-2003**

To: Nahshin, Leonid (m.yael@lycos.com)

Subject: TRADEMARK APPLICATION NO. 78206651 - NIC-OUT - N/A

Sent: 7/7/03 6:12:51 PM

Sent As: ECom105

Attachments: Attachment - 1
Attachment - 2

UNITED STATES PATENT AND TRADEMARK OFFICE

SERIAL NO: 78/206651

APPLICANT: Nahshin, Leonid

CORRESPONDENT ADDRESS:
Menkin, Yael
2607 WELSH RD APT E207
PHILADELPHIA PA 19114-3316

RETURN ADDRESS:
Commissioner for Trademarks
2900 Crystal Drive
Arlington, VA 22202-3514
ecom105@uspto.gov

MARK: NIC-OUT

CORRESPONDENT'S REFERENCE/DOCKET NO: N/A

CORRESPONDENT EMAIL ADDRESS:
m.yael@lycos.com

Please provide in all correspondence:

1. Filing date, serial number, mark and applicant's name.
2. Date of this Office Action.
3. Examining Attorney's name and Law Office number.
4. Your telephone number and e-mail address.

OFFICE ACTION

TO AVOID ABANDONMENT, WE MUST RECEIVE A PROPER RESPONSE TO THIS OFFICE ACTION WITHIN 6 MONTHS OF OUR MAILING OR E-MAILING DATE.

Serial Number 78/206651 NIC-OUT

The assigned examining attorney has reviewed the referenced application and determined the following.

000123

Likelihood of Confusion

The examining attorney refuses registration under Trademark Act Section 2(d), 15 U.S.C. §1052(d), because the applicant's mark, when used on or in connection with the identified goods/services, so resembles the mark in U.S. Registration No. 2337463 as to be likely to cause confusion, to cause mistake, or to deceive. TMEP §§1207.01 *et seq*. See the enclosed registration.

The examining attorney must analyze each case in two steps to determine whether there is a likelihood of confusion. First, the examining attorney must look at the marks themselves for similarities in appearance, sound, connotation and commercial impression. *In re E. I. DuPont de Nemours & Co.*, 476 F.2d 1357, 177 USPQ 563 (C.C.P.A. 1973). Second, the examining attorney must compare the goods or services to determine if they are related or if the activities surrounding their marketing are such that confusion as to origin is likely. *In re August Storck KG,* 218 USPQ 823 (TTAB 1983); *In re International Telephone and Telegraph Corp.*, 197 USPQ 910 (TTAB 1978); *Guardian Products Co., v. Scott Paper Co.*, 200 USPQ 738 (TTAB 1978). TMEP §§1207.01 *et seq*.

The applicant seeks registration of NIC-OUT for "cigarette filter holder to reduce the inhalation of tar and nicotine." The registered mark is NICOUT for "smoker's apparatus for puncturing holes in cigarettes." The applicant's mark is nearly identical to the mark in the cited registration. Despite the hyphen in the applicant's mark, the marks are spelled the same and sound the same.

Further, the applicant's goods are highly similar to the goods provided by the registrant. While not identically, the parties' goods are related in that they would be sold in the same channels of trade to the same purchasers, namely those seeking products that reduce the nicotine and/or tar in cigarettes.

Since the marks are confusingly similar, and the goods are highly related, it is likely purchasers would confuse the sources of the goods. The examining attorney must resolve any doubt as to the issue of likelihood of confusion in favor of the registrant and against the applicant who has a legal duty to select a mark which is totally dissimilar to trademarks already being used. *Burroughs Wellcome Co. v. Warner-Lambert Co.,* 203 USPQ 191 (TTAB 1979). Accordingly, the mark is refused registration under Section 2(d).

The applicant should note the following potential ground for refusal.

Prior Pending Application

The examining attorney encloses information regarding pending Application Serial No. 78-163268. The filing date of the referenced application precedes the applicant's filing date. There may be a likelihood of confusion between the two marks under Trademark Act Section 2(d), 15 U.S.C. §1052 (d). If the referenced application matures into a registration, the examining attorney may refuse registration in this case under Section 2(d). 37 C.F.R. §2.83; TMEP §1208.01.

Action on this application will be suspended pending the disposition of Application Serial No. 78-163268, upon receipt of the applicant's response resolving the following informalities.

Cannot Assert §1(a) and §1(b) for the Same Goods

The applicant asserts use of the mark in commerce for "cigarette filter holder to reduce the inhalation of tar and nicotine " and applicant asserts that it has a bona fide intent to use the mark in commerce for the **same** goods. An applicant may not assert both use of the mark in commerce, under Trademark Act Section 1(a), 15 U.S.C. §1051(a), and intent to use the mark in commerce, under Trademark Act Section 1(b), 15 U.S.C. §1051(b), **for the same goods**. 37 C.F.R. §2.34(b)(1); TMEP §806.02(b). The

000124

applicant must delete one basis or divide the goods between the two bases, as appropriate.

Response

No set form is required for response to this Office action. The applicant must respond to each point raised. The applicant should simply set forth the required changes or statements and request that the Office enter them. The applicant must sign the response. In addition to the identifying information required at the beginning of this letter, the applicant should provide a telephone number to speed up further processing.

If the applicant does not have an attorney the applicant may wish to hire a trademark attorney because of the technicalities involved in the application. The Patent and Trademark Office cannot aid in the selection of an attorney. 37 C.F.R. §2.11.

If the applicant has any questions or needs assistance in responding to this office action, please telephone the assigned examining attorney.

/Idi Aisha Clarke/
Trademark Attorney
Law Office 105
(703) 308-9105 Ext. 248
Fax: (703) 872-9825

How to respond to this Office Action:

To respond formally using the Office's Trademark Electronic Application System (TEAS), visit **http://www.uspto.gov/teas/index.html** and follow the instructions.

To respond formally via E-mail, visit **http://www.uspto.gov/web/trademarks/tmelecresp.htm** and follow the instructions.

To respond formally via regular mail, your response should be sent to the mailing Return Address listed above and include the serial number, law office and examining attorney's name on the upper right corner of each page of your response.

To check the status of your application at any time, visit the Office's Trademark Applications and Registrations Retrieval (TARR) system at **http://tarr.uspto.gov/**

For general and other useful information about trademarks, you are encouraged to visit the Office's web site at **http://www.uspto.gov/main/trademarks.htm**

FOR INQUIRIES OR QUESTIONS ABOUT THIS OFFICE ACTION, PLEASE CONTACT THE ASSIGNED EXAMINING ATTORNEY.

TDR Home

000125

This document may be displayed as a PDF file containing images without text. You may view online or save the entire document by clicking on the file download icon in the upper right corner of this page. [required PDF viewer]

FAQ: Are you seeing only the first page of this PDF document?

If you need help:

- ***General trademark information**: Please e-mail TrademarkAssistanceCenter@uspto.gov, or telephone either 571-272-9250 or 1-800-786-9199.*
- ***Technical help**: For instructions on how to use TDR, or help in resolving **technical** glitches, please e-mail TDR@uspto.gov. If outside of the normal business hours of the USPTO, please e-mail Electronic Business Support, or call 1-800-786-9199.*
- ***Questions about USPTO programs**: Please e-mail USPTO Contact Center (UCC).*

Please Note:

- *The Mail/Create Date is the date the document was loaded into the database; it is not necessarily the mailing date from which the response period, if any, flows. The mailing date is available in the prosecution history in TARR.*
- *Some filings made through the Trademark Electronic Application System (TEAS) are not uploaded immediately into TDR. Instead, it may take approximately seven (7) calendar days for the upload. If that amount of time has passed and your filing is still not appearing, please e-mail TDR@uspto.gov.*

000126

Thank you for your request. Here are the latest results from the TARR web server.

This page was generated by the TARR system on 2010-12-14 18:09:46 ET

Serial Number: 78206651 Assignment Information Trademark Document Retrieval

Registration Number: (NOT AVAILABLE)

Mark (words only): NIC-OUT

Standard Character claim: No

Current Status: Abandoned-Failure To Respond Or Late Response

Date of Status: 2004-02-25

Filing Date: 2003-01-23

Transformed into a National Application: No

Registration Date: (DATE NOT AVAILABLE)

Register: Principal

Law Office Assigned: LAW OFFICE 105

If you are the applicant or applicant's attorney and have questions about this file, please contact the Trademark Assistance Center at TrademarkAssistanceCenter@uspto.gov

Current Location: 900 -File Repository (Franconia)

Date In Location: 2004-04-12

LAST APPLICANT(S)/OWNER(S) OF RECORD

---

1. Nahshin, Leonid

Address:
Nahshin, Leonid
HAZVI 153/36
Beer-Sheva 84746
Israel
Legal Entity Type: Individual
Country of Citizenship: Israel
Phone Number: (972) 8 642-1322

000127

GOODS AND/OR SERVICES

International Class: 034
Class Status: Active
cigarette filter holder to reduce the inhalation of tar and nicotine.; cigarette filter holder to reduce the inhalation of tar and nicotine.
Basis: 1(a)
First Use Date: 2000-10-01
First Use in Commerce Date: 2000-10-01

ADDITIONAL INFORMATION

(NOT AVAILABLE)

MADRID PROTOCOL INFORMATION

(NOT AVAILABLE)

PROSECUTION HISTORY

NOTE: To view any document referenced below, click on the link to "Trademark Document Retrieval" shown near the top of this page.

2004-02-25 - Abandonment - Failure To Respond Or Late Response

2003-07-07 - Non-final action e-mailed

2003-07-07 - Assigned To Examiner

ATTORNEY/CORRESPONDENT INFORMATION

Correspondent
Menkin, Yael
2607 WELSH RD APT E207
PHILADELPHIA PA 19114-3316
Phone Number: 215-671-1060

Domestic Representative
Menkin, Yael
Phone Number: 215-671-1060

000128