ESTTA Tracking number: **ESTTA122419**

Filing date: **01/30/2007**

IN THE UNITED STATES PATENT AND TRADEMARK OFFICE
BEFORE THE TRADEMARK TRIAL AND APPEAL BOARD

Proceeding	92043516
Party	Defendant Stich, Willi Lorenz Stich, Willi Lorenz 950 Jennings Street Bethlehem, PA 18017
Correspondence Address	GREGORY RICHARDSON LAW OFFICES OF GREGORY RICHARDSON, ESQ. 3890 11TH STREET, SUITE 210 RIVERSIDE, CA 92501 UNITED STATES GREGORY@GREGORYRICHARDSONESQ.COM
Submission	Opposition/Response to Motion
Filer's Name	Gregory Richardson
Filer's e-mail	gregory@gregoryrichardsonesq.com, becky@billlawrence.com
Signature	/gregoryrichardsonesq/
Date	01/30/2007
Attachments	msgSuppl.pdf (4 pages)(122487 bytes) protestDecision.pdf (19 pages)(6876850 bytes)

Gregory Richardson
Law Offices of Gregory Richardson, Esq.
3890 11th Street, Suite #210
Riverside, California 92501
Tel.: (951) 680-9388

Attorney for Bill Lawrence

IN THE UNITED STATES PATENT AND TRADEMARK OFFICE

TRADEMARK TRIAL AND APPEAL BOARD

JZCHAK N. WAJCMAN dba BILL LAWRENCE PRODUCTS and BILL LAWRENCE GUITAR PICKUPS, Petitioner, vs. WILLI LORENZ STICH a/k/a BILL LAWRENCE, Registrant/Respondent.	Cancellation No.: 92043516 Serial Number: 76594437 Registration Number: 2,303,676 **In the matter of Registration No. 2,303,676** **Mark: BILL LAWRENCE** **Date Registered: December 28, 1999** **BILL LAWRENCE'S SUPPLEMENTAL POINTS AND AUTHORITIES IN SUPPORT OF REIGISTRANT'S MOTION FOR SUMMARY JUDGMENT** Filed: January 30, 2007

I. Introduction.

1. Registrant Willi Lorenz Stich a/k/a Bill Lawrence, by his attorney, hereby submits this supplemental Points and Authorities in Support of Registrant's Motion for Summary Judgment.

2. There is no genuine issue of material fact on whether "Bill Lawrence" or "Willi Stich" refers to a living person. On January 18, 2007 Jessie N. Roberts, Administrator for Trademark Classification & Practice, wrote that "Bill Lawrence is a living individual of significance in the field of musical instruments, in particular electronic sound pickups for guitar. It is noted that the Examining Attorney inquired as to whether the name presented in the marks is a living individual to which the applicant responded that he was not. The evidence submitted by the protestor is found to be significant concerning this issue."

3. Mr. Roberts continues in a letter to Chris Pedersen, Managing Attorney: "A letter of Protest was granted in the above-identified application."

4. A true and correct copy of the correspondence from the Patent and Trademark Office is attached and incorporated herein. Bill Lawrence requests that the USPTO take judicial notice of the proceedings and files in Application Serial No. 76594437.

5. Mr. Wajcman will not be able to obtain registration of his mark because Bill Lawrence, a.k.a. Willi Stich, has not given him permission to register. Moreover, since Mr. Wajcman's original application did not include written permission from Bill Lawrence, Wajcman's application is void *ab initio*.

6. Bill Lawrence had a good faith belief in the validity of his application for registration because "Bill Lawrence" refers to himself, a living person, and he did not give anyone permission to register "Bill Lawrence" as a trademark. Since "Bill Lawrence" refers to a living person, i.e. the Registrant, Bill Lawrence had a reasonable basis for believing that he had the exclusive right to register his own name, especially since he has given no one else permission to register it.

7. Not only did Wajcman fail to allege any facts to show that Bill Lawrence was not entitled to registration, he will now be unable to obtain his own registration because he falsely stated that "Bill Lawrence" does not refer to a living person.

8. Further proceedings in this matter, including the Petitioner's pending motion for summary judgment, are moot because even if Mr. Wajcman were found to have acquired any interest in the trademark "Bill

Lawrence" or have any type of license, he would still need the permission of Bill Lawrence to obtain a federal registration. Since Bill Lawrence never granted such permission, Mr. Wajcman's application will be denied.

9. Because Mr. Wajcman's original application included no copy of any written permission from Bill Lawrence, Mr. Wajcman's application is void from the start.

II. Conclusion

10. But even if the PTO were to allow Wajcman to continue to rely on the forgeries and other falsehoods as discussed in the original motion for summary judgment, the PTO should not allow Wajcman to further confuse the situation by maintaining that "Bill Lawrence" does not refer to a living person, i.e. Bill Lawrence and/or Willi Stich, the Registrant.

PRAYER

WHEREFORE, THE REGISTRANT BILL LAWRENCE prays for the following,

For the above reasons, Bill Lawrence respectfully requests that his motion for summary judgment be granted on the grounds that Bill Lawrence had a good faith belief in the validity of his own application, that Wajcman's counter motion for summary judgment be denied on the grounds that "Bill Lawrence" refers to a living person and he has no permission to register, and that Wajcman's application and cancellation be terminated.

Dated: January 30, 2007.

_____

Gregory Richardson
Attorney for Bill Lawrence

CERTIFICATE OF SERVICE

I hereby certify that a copy of

BILL LAWRENCE'S SUPPLEMENTAL POINTS AND AUTHORITIES IN SUPPORT OF REIGISTRANT'S MOTION FOR SUMMARY JUDGMENT

on the following attorney of record for Petitioner, by depositing same with the United States Postal Service on this 30TH Day of January, 2007, addressed as follows:

Jay S. Kopelowitz
Kopelowitz & Associates
12702 Via Cortina, Suite 700
Del Mar, California 92014

_____

Gregory Richardson

Commissioner for Trademarks
P.O. Box 1451
Alexandria, VA 22313-1451
www.uspto.gov

MEMORANDUM

DATE:

TO: Maureen L. Dall
Examining Attorney
Law Office 110

FROM: Jessie N. Roberts
Administrator for Trademark
Classification & Practice

SUBJECT: Letter of Protest concerning Application Serial No. 76594437

The above-referenced Letter of Protest contains the following objection:

Bill Lawrence is a living individual of significance in the field of musical instruments, in particular, electronic sound pickups for guitar. It is noted that the Examining Attorney inquired as to whether the name presented in the mark is a living individual to which the applicant responded that he was not. The evidence submitted by the protestor is found to be significant concerning this issue.

The following evidence was submitted and is attached hereto:

Copies of publications in the field of musical instruments, in particular, the guitar in which Bill Lawrence is referred to as a significant figure in that field. Also, a copy of a patent for a pickup apparatus for stringed musical instrument has been submitted in which Willi L. Stich is listed as the inventor. The registration cited by the Examining Attorney in her suspension letter of August 3, 2005 indicates that Bill Lawrence is a pseudonym for Willi L. Stich.

A Letter of Protest is granted if the evidence presented by the protester established a clear case which supports a refusal, requirement or suspension in an application. Publication of the mark for opposition without consideration of the issue and evidence presented in the Letter of Protest may result in a clear error by the Office. This standard has been met by this Letter of Protest. Therefore, a refusal, requirement or suspension based on the objection presented in the Letter of Protest should be issued. Applicant, of course, may present argument concerning this action.

US005376754A

United States Patent [19]

Stich

[11] Patent Number: 5,376,754

[45] Date of Patent: Dec. 27, 1994

[54] **PICKUP APPARATUS, HAVING A WINDING WITH AN ADJACENT CLOSED CIRCUIT, FOR STRINGED MUSICAL INSTRUMENTS**

[75] Inventor: **Willi L. Stich**, Mt. Juliet, Tenn.

[73] Assignee: **Gibson Guitar Corp.**, Nashville, Tenn.

[21] Appl. No.: **3,457**

[22] Filed: **Jan. 12, 1993**

[51] **Int. Cl.**[5] **G10H 3/18**

[52] **U.S. Cl.** **84/728**

[58] **Field of Search** 84/726–728

[56] **References Cited**

U.S. PATENT DOCUMENTS

Re. 20,070	8/1936	Lesti .	
2,119,584	6/1938	Knoblauch .	
2,262,335	11/1941	Russell .	
2,896,491	7/1959	Lover .	
3,711,619	1/1973	Jones et al. .	
3,915,048	10/1975	Stich .	
3,916,751	11/1975	Stich .	
4,143,575	3/1979	Oliver	84/726
4,151,776	5/1979	Stich .	
4,164,163	8/1979	Rhodes .	
4,222,301	9/1980	Valdez	84/728
4,364,295	12/1982	Stich .	
4,442,749	4/1984	DiMarzio et al. .	
4,501,185	2/1985	Blucher .	
4,809,578	3/1989	Lace, Jr. .	

OTHER PUBLICATIONS

The Guitar Handbook, Ralph Denyer with Isaac Guillory and Alastair M. Crawford, pp. 52–53, 186–189 and 194 (1982).

"Pickups The 10 Most Frequently Asked Questions Answered by Bill Lawrence", *Guitar Player* magazine, Dec. 1975.

Primary Examiner—Stanley J. Witkowski

Attorney, Agent, or Firm—Dougherty, Hessin, Beavers & Gilbert

[57] **ABSTRACT**

A pickup apparatus for a stringed musical instrument includes an electromagnetic string vibration sensor, preferably including at least one winding, and a feature associated therewith, preferably a conductive closed circuit around the winding, to suppress resonant peaks and thereby equalize the harmonic reproduction. The apparatus preferably includes two such windings and circuits connected in a hum-canceling manner. A second hum-canceling pair of windings having a lower inductance to reproduce clean highs without phase cancellation can be added along with a resistive-capacitive network so that the combination can reproduce a wide variety of different sounds, all at a consistent high output level.

30 Claims, 1 Drawing Sheet

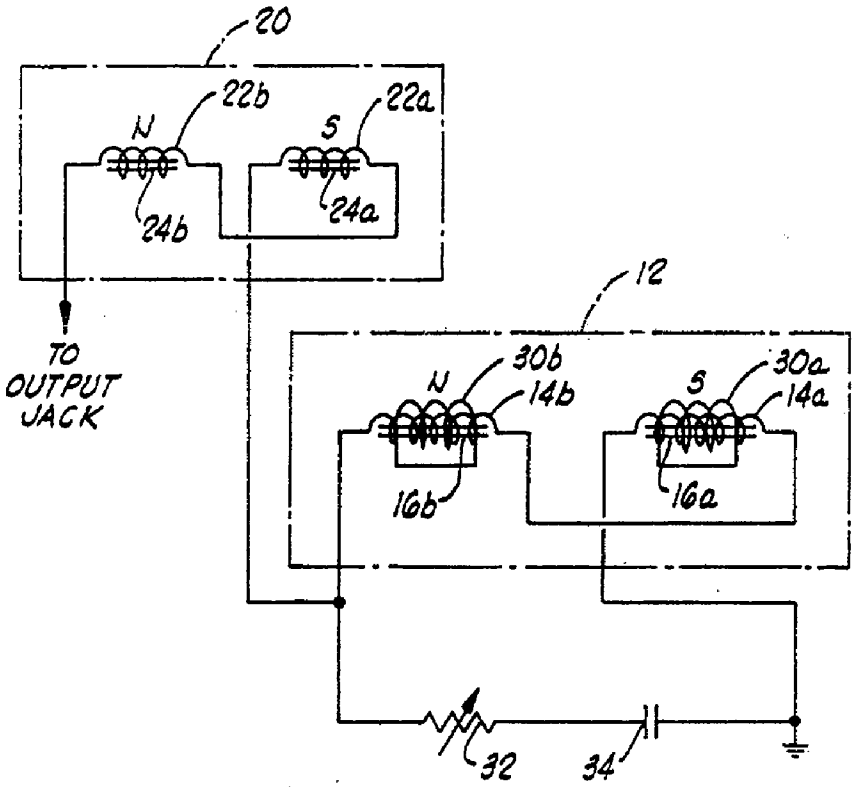

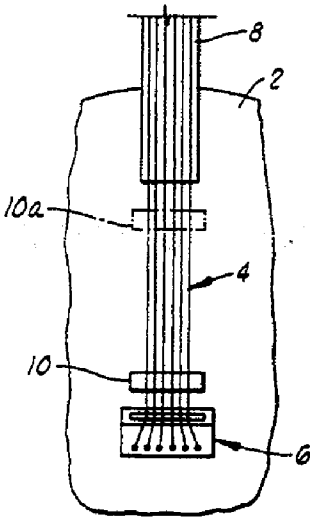

FIG. 1

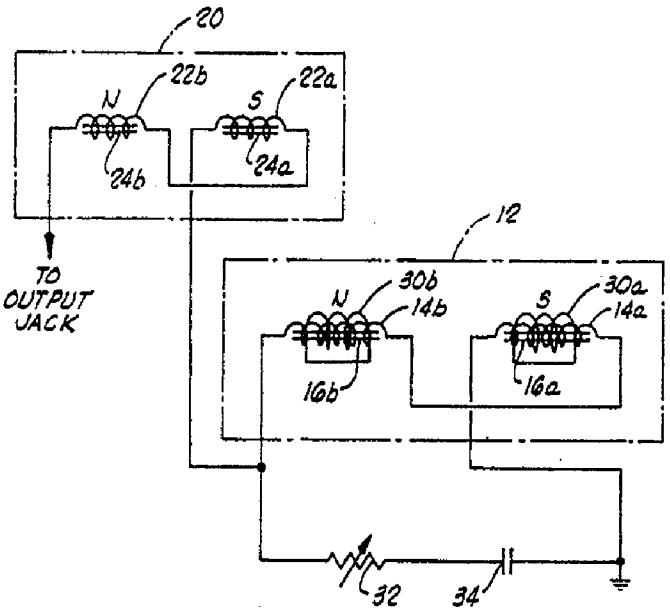

FIG. 2

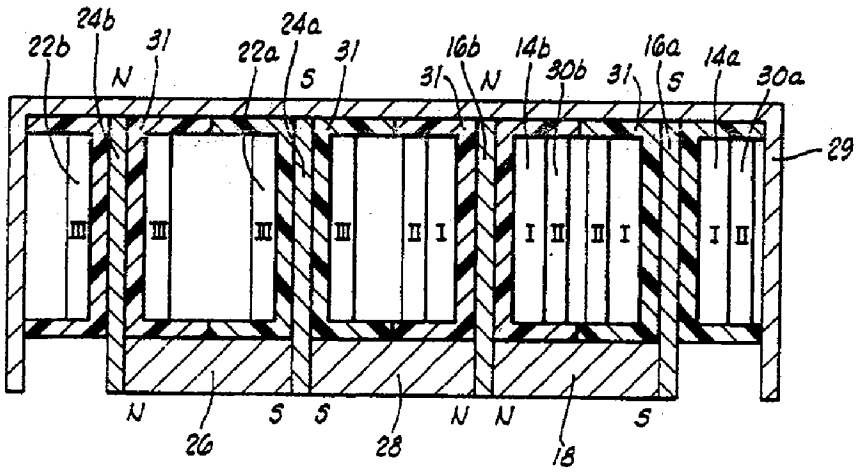

FIG. 3

PICKUP APPARATUS, HAVING A WINDING WITH AN ADJACENT CLOSED CIRCUIT, FOR STRINGED MUSICAL INSTRUMENTS

BACKGROUND OF THE INVENTION

This invention relates to electromagnetic pickup apparatus for stringed musical instruments. The following explanation is made with specific, but non-limiting, reference to electric guitars.

There are many different sounding electromagnetic pickup devices. Any one type typically tends to reproduce only a powerful low end with lesser highs or a brilliant high end with a lack of lows and a considerable loss of output. One type of pickup apparatus particularly suited for reproducing the low end has a hum-canceling dual-winding transducer, whereas one type of pickup apparatus particularly suited for reproducing the high end has a non-hum-canceling single-winding transducer. Although combinations of these are used to give a player a wider variety of sounds at different output levels, there are at least two shortcomings of relevance to the present invention: resonant peaks and location of pickups.

As to resonant peaks, a prior hum-canceling dual-winding pickup apparatus typically has wide band peaks in the midrange (e.g., 3,000 hertz to 5,000 hertz) that can make the reproduced sound undesirably harsh because at least some of these peaks correspond to, and thus enhance the reproduction of, undesired harmonics of a low fundamental frequency produced by a vibrating string when it is played.

As to the location factor, such a prior hum-canceling dual-winding pickup device located at the fingerboard position tends to reproduce imprecise and mushy low frequencies, especially at today's high volume performance levels. Such lows are better reproduced by the pickup at the bridge position; however, this is where the aforementioned harmonics are more likely sensed and reproduced.

The location of the pickup apparatus can also hinder the player in his or her performance when several transducers have to be mounted between the bridge and fingerboard to give the player a variety of different sounds. These can physically impede playing both because they can be in the way when the player wants to pick individual strings and because they require the player to reach for and manipulate multiple controls for connecting different combinations of the transducers.

In view of the aforementioned shortcomings, there is the need for a pickup apparatus that can reproduce a rich powerful low end without significant harshness due to harmonics in the midrange where resonant peaks have typically existed in previous pickup apparatus. Such a pickup apparatus should also be substantially noise free. Preferably, such a pickup apparatus should also be able to sense and reproduce brilliant highs. To free the playing area and obviate excessive control handling, thereby facilitating playing, such a pickup apparatus preferably should have a single transducer assembly that can be located out of the player's way near the bridge of the instrument and that can be used in reproducing a variety of sounds heretofore available only through the use of multiple transducer assemblies, and such reproduction should be at a consistent high output level regardless of whether lows or highs are being reproduced.

SUMMARY OF THE INVENTION

The present invention overcomes the above-noted and other shortcomings of the prior art and meets the aforementioned needs by providing a novel and improved pickup apparatus for a stringed musical instrument. Advantages include substantially noise free reproduction of rich powerful lows without significant distortion by harmonics in the midrange. In at least a preferred embodiment, further advantages include: reproduction of the high end along with the low end; compact construction for preferred location solely adjacent the bridge; reproduction of a variety of sounds without multiple transducer assemblies; and consistent high output levels.

The present invention provides a pickup apparatus for a stringed musical instrument, comprising: an electrically conductive winding for mounting on the instrument and for connecting into an amplification circuit; and an electrically conductive closed circuit disposed adjacent the winding.

In a more particular embodiment, the present invention provides a pickup apparatus for a stringed musical instrument, comprising: first hum-canceling electromagnetic means for responding to string vibrations, including first and second windings connected in series; a first overwinding adjacent the first winding; a second overwinding adjacent the second winding; second hum-canceling electromagnetic means for responding to string vibrations, including third and fourth windings connected in series, the second hum-canceling electromagnetic means connected in series with the first hum-canceling electromagnetic means; and a series resistive-capacitive network connected in series with the second hum-canceling electromagnetic means and in parallel with the first hum-canceling electromagnetic means.

Therefore, from the foregoing, it is a general object of the present invention to provide a novel and improved pickup apparatus for stringed musical instruments. Other and further objects, features and advantages of the present invention will be readily apparent to those skilled in the art when the following description of the preferred embodiment is read in conjunction with the accompanying drawings.

BRIEF DESCRIPTION OF THE DRAWINGS

FIG. 1 is a representation of a part of an electric guitar with which the present invention can be used.

FIG. 2 is a schematic circuit diagram of the preferred embodiment pickup apparatus of the present invention.

FIG. 3 is a schematic sectional view of a particular implementation of the winding structure of the apparatus represented in FIG. 2.

DETAILED DESCRIPTION OF PREFERRED EMBODIMENT

Although the present invention can be used with any stringed musical instrument, the preferred embodiment is particularly adapted for use with an electric guitar 2 partially represented in FIG. 1. The illustrated guitar 2 has six strings 4, but more or less may be used on other types of guitars or other musical instruments. The strings 4 are anchored at their lower ends in conventional manner near a bridge 6, and they are connected at their upper ends to tuning screws (not shown) located at the upper end of fingerboard 8.

Mounted in conventional manner beneath the strings 4 adjacent the bridge 6 is a pickup apparatus 10 of the

present invention. Although this is the preferred mounting location, at least a portion **10***a* of one embodiment of the pickup apparatus can be mounted on the body of the guitar **2** at other locations (e.g., near the end of the fingerboard **8**) spaced from the primary portion that preferably remains near the bridge **6**.

Referring to FIG. **2**, the pickup apparatus **10** of the preferred embodiment includes electromagnetic transducer means **12** for providing a magnetic field and for conducting an electrical current in response to vibration of one or more of the strings **4** in the magnetic field when the electromagnetic means **12** is connected into a conventional amplification circuit (not shown). The electrical current has frequency responsive to vibration of the strings **4** in the magnetic field. This occurs in a manner as known in the art.

In the preferred embodiment, the electromagnetic means **12** is particularly adapted for connecting adjacent the bridge **6** to be out of the player's way and because the full harmonic spectrum can be sensed only at the bridge.

The electromagnetic means **12** of the preferred embodiment includes at least one electrically conductive winding **14** and at least one associated pole piece **16**. More preferably, there are two such windings **14***a*, **14***b* connected in series and mounted on respective pole pieces **16***a*, **16***b*; and most preferably, the two windings of this pair are connected in a known hum-canceling relationship (e.g., either a standard Gibson side-by-side humbucker configuration or a standard Gibson stacked configuration known in the art). As shown in FIG. **3**, the pole pieces **16***a*, **16***b* can be magnetized at least in part by an adjacent permanent magnet **18**.

Although the electromagnetic means **12**, modified as subsequently described and claimed, has utility by itself, the pickup apparatus **10** more preferably further comprises another electromagnetic transducer means for providing another magnetic field and for conducting electrical current in response to vibration of one or more of the strings **4** in this other magnetic field. This is generally identified in FIG. **2** by reference numeral **20**.

The electromagnetic means **20** preferably includes a pair of electrically conductive windings **22***a*, **22***b* wound around respective pole pieces **24***a*, **24***b* magnetized by permanent magnet **26** (FIG. **3**). Further magnetization of both electromagnetic means **12**, **20** is provided by a permanent magnet **28** disposed between pole pieces **16***b*, **24***a* in the FIG. **3** configuration, wherein windings **14***b*, **22***a* are in higher magnetic flux than windings **14***a*, **22***b*.

To provide a complete, out-of-the-way winding package, the two pairs of windings **14***a*, **14***b* and **22***a*, **22***b* are preferably disposed adjacent each other and mounted in a single housing **29** (FIG. **3**) of conventional size and shape (e.g., preferably less than 1.5 inches wide so that it is interchangeable with a standard prior type of pickup). This package is preferably mounted adjacent the bridge **6** where the present invention is responsive to both low and high frequencies of the played strings and is out of the way when the player plays the strings. It is contemplated by the present invention, however, that the electromagnetic means **20** can be assembled in a separate housing from the electromagnetic means **12** and mounted elsewhere on the guitar **2**, such as described above as portion **10***a* shown in FIG. **1**.

Referring to FIG. **3**, there is shown a particular implementation of the preferred embodiment of FIG. **2** described thus far. This implementation is a lateral side-by-side configuration rather than a vertical, stacked configuration which can also be used (or a combination of side-by-side and stacked can be used). The windings are wound in a conventional manner around respective elongated, centrally slotted coil forms **31** having lateral cross-sectional "I" shapes as shown in FIG. **3**. The windings **14***a*, **14***b* are disposed in regions I around their respective coil forms, and the windings **22***a*, **22***b* are disposed in regions III around their respective coil forms. The materials of construction are conventional. By way of non-limiting example only, the windings may be made of 44 or 46 gauge wire with the windings **14***a*, **14***b* having 6500 turns and the windings **20***a*, **20***b* having 2200 turns.

Used alone, the electromagnetic means **12** has resonant peaks within the midrange frequency response (e.g., 3,000 hertz to 5,000 hertz). This causes harmonics of like frequency contained within the vibrations of the strings **4** to be significantly reproduced. As previously mentioned, this can produce an undesired sound.

To prevent this undesired harsh reinforced reproduction in the present invention, the pickup apparatus **10** further comprises means for suppressing in the amplified sound the generation of harmonics within a predetermined range, preferably from about 3,000 hertz to about 5,000 hertz with respect to an electric guitar. In the preferred embodiment, this preferably mid-range harmonic suppressing means decreases the effective inductance of the electromagnetic means **12** in response to increasing frequencies. In a specific (but non-limiting) implementation for an electric guitar, this decrease is from, for example, a nominal inductance of about 10 henries at lower frequencies to about 5 henries in the preferred midrange, as compared with a substantially constant inductance of preferably less than about 1.6 henries and more preferably less than about 1.0 henry for a corresponding electromagnetic means **20** (the ratio between nominal inductances of the electromagnetic means **20** and the electromagnetic means **12** is preferably at least 1:4). This decreased inductance of the modified electromagnetic means **12** suppresses harmonic reproduction without significantly affecting the output signal level.

Referring to FIG. **2**, the harmonic suppressing means of the preferred embodiment includes an electrically conductive closed circuit **30***a* inductively coupled to the winding **14***a* and an electrically conductive closed circuit **30***b* inductively coupled to the winding **14***b*. Referring to FIG. **3**, each closed circuit is defined by a respective wire overwinding in the two respective regions II; however, it is contemplated that each closed circuit can be located elsewhere relative to its primary winding (e.g., inwardly of or in the middle of the primary winding). Preferably an insulating layer, such as paper, is disposed between the windings in region I and the closed circuit winding in region II. Each of these closed circuits can be simply a respective loop of wire having its ends connected together after being wound over the respective primary vibration sensing winding as schematically shown in FIG. **2**, or they can include other components such as a variable or fixed resistor or capacitor or both by which the impedance of the closed circuit can be controlled. Such loops can include one or more turns (e.g., a single turn of #10 AWG insulated copper wire or a thousand turns of #44 AWG insulated copper wire). To obtain the highest precision in tuning the circuit, which is preferred in a hum-canceling pickup apparatus, a loop having more turns with a smaller wire is preferred. Such "closed circuit" as re-

ferred to herein means a self-contained current conductive circuit that is inductively coupled as described, but that is not electrically connected in the primary amplification circuit in which the windings **14***a*, **14***b*, **22***a*, **22***b* are intended to be connected.

Another feature of the overall preferred embodiment pickup apparatus **10** represented in FIG. **2** is a series resistive-capacitive network containing a variable resistor **32**, such as a potentiometer, and a capacitor **34**, which may also be a variable device or an array of two or more switch-selectable discrete capacitors, for example. A variable or fixed resistor can also be used in parallel with the capacitor(s). Control or selection is via control knobs or switches (not shown) accessible on the face of the guitar **2** in known manner. The values of these components can be of any suitable values as known in the art for tone control circuits. By way of specific but non-limiting examples, the capacitor **34** can be in the range of about 0.002 microfarad to about 0.05 microfarad.

In use on an electric guitar, one end of the pair of series-connected windings **22***a*, **22***b* (specifically, an end of winding **22***b* in FIG. **2**) is connected to an output jack (not shown) into which a cord from an amplification circuit can be connected in known manner. The connection of the winding end to the output jack is preferably through a variable resistor operable from the front of the guitar to control volume in known manner. The other end of the pair of windings **22***a*, **22***b* is connected in series with the series-connected windings **14***a*, **14***b* and the resistive-capacitive network (namely, an end of winding **22***a*, an end of winding **14***b* and an end of resistor **32** in FIG. **2**), which network is connected in parallel with the windings **14***a*, **14***b*. The common ends of the pair of windings **14***a*, **14***b* and the resistive-capacitive network not connected to the junction with the windings **22***a*, **22***b* (namely, the connected ends of winding **14***a* and capacitor **34** in FIG. **2**) are connected to electrical ground in use. In this embodiment, full low end frequency reproduction is obtained because the lows are reproduced by both electromagnetic means **12**, **20**, which provides in combination a relatively wide magnetic field, while high end frequency reproduction is obtained by the electromagnetic means **20**, which alone provides a narrower magnetic field. The resistor-capacitor network controls the cut-off for the electromagnetic means **12** and the highs passed by the electromagnetic means **20**. The closed circuits **30***a*, **30***b* change the effective inductances of the windings **14***a*, **14***b*, respectively, so that undesired harmonics from the strings are suppressed in the amplified output sound. The foregoing can be obtained while still providing an overall impedance at 1,000 hertz within the range between 40 kilo-ohms and 80 kilo-ohms as needed for today's conventional amplification circuits.

Although the embodiment of FIG. **2** and the implementation of FIG. **3** are presently preferred, it is contemplated that other configurations can be used. For example, additional windings can be added in series with resistive-capacitive networks connected in parallel from electrical ground across one or more sets of windings; windings can be connected in parallel; multiple configurations can be obtained using switches; and, as previously mentioned, the resistive-capacitive network(s) can take various configurations of either fixed or variable nature.

In summary, the preferred embodiment of the present invention provides a pickup apparatus that can reproduce a wide variety of different sounds, all at a consistent high output level while also maintaining full hum-canceling effect. Each of the two windings of the higher inductance pair is surrounded with a loop of conductive material to decrease the inductance at the midrange frequencies and to suppress resonant peaks and corresponding harmonics, thereby allowing for the reproduction of a solid low end without harmonic harshness. The other hum-canceling pair of windings reproduces clean highs without the disadvantage of phase cancellation.

It is contemplated that through the use of a single one of the preferred embodiment unitary pickup apparatus, sounds replicating those of either the Gibson Les Paul guitar or the Fender Stratocaster guitar, for example, can be obtained. In this preferred embodiment, lows, highs and peaks are controllable with a single potentiometer (i.e., resistor **32**) and the apparatus can be located on the instrument out of the way of the player (i.e., adjacent the bridge **6**).

Thus, the present invention is well adapted to carry out the objects and attain the ends and advantages mentioned above as well as those inherent therein. While a preferred embodiment of the invention has been described for the purpose of this disclosure, changes in the construction and arrangement of parts and the performance of steps can be made by those skilled in the art, which changes are encompassed within the spirit of this invention as defined by the appended claims.

What is claimed is:

1. Pickup apparatus for a stringed musical instrument, comprising:

an electrically conductive winding for mounting on the instrument and for connecting into an amplification circuit; and

an electrically conductive closed circuit disposed adjacent said winding but permanently electrically unconnected from said winding, the amplification circuit and the strings of the instrument.

2. Pickup apparatus as defined in claim **1**, wherein said electrically conductive closed circuit consists of a closed loop of wire.

3. Pickup apparatus as defined in claim **1**, further comprising:

an electrically conductive second winding, connected to the first-mentioned said winding; and

an electrically conductive second closed circuit, disposed adjacent said second winding.

4. Pickup apparatus as defined in claim **3**, wherein said first-mentioned winding and said second winding are connected in hum-canceling relationship.

5. Pickup apparatus as defined in claim **4**, further comprising a resistive-capacitive network connected in parallel with said hum-canceling connected windings.

6. Pickup apparatus as defined in claim **3**, wherein:

said first-mentioned winding and said second winding define a first pair of windings;

said pickup apparatus further comprises third and fourth electrically conductive windings defining a second pair of windings; and

means for connecting said first and second pairs of windings.

7. Pickup apparatus as defined in claim **6**, further comprising a resistive-capacitive network connected to said first and second pairs of windings.

8. Pickup apparatus as defined in claim **6**, wherein said first and second pairs of windings are disposed adjacent each other.

9. Pickup apparatus as defined in claim 6, wherein said first-mentioned winding and said second winding are connected in hum-canceling relationship and further wherein said third winding and fourth winding are connected in hum-canceling relationship.

10. Pickup apparatus as defined in claim 1, wherein said closed circuit includes wire wound adjacent said winding.

11. Pickup apparatus as defined in claim 10, wherein said closed circuit consists of said wire and at least one other passive component.

12. Pickup apparatus as defined in claim 11, wherein said at least one other passive component is selected from the group consisting of resistors and capacitors.

13. Pickup apparatus for a stringed musical instrument, comprising:

electromagnetic means, having a nominal inductance, for providing a magnetic field and for enabling electrical current to be conducted with frequency responsive to vibration of at least one string of the instrument in the magnetic field; and

closed loop electrically conductive mid-range harmonic suppressing means, coupled to said electromagnetic means, for conducting electrical current in said electrically conductive means so that the inductance of said electromagnetic means is reduced in response to frequency throughout a range of frequencies.

14. Pickup apparatus as defined in claim 13, further comprising second electromagnetic means, having a nominal inductance lower than said first-mentioned electromagnetic means, for providing another magnetic field and for enabling electrical current to be conducted with frequency responsive to vibration of at least one string of the instrument in said another magnetic field, said second electromagnetic means having a first end adapted for connecting to an amplification circuit and having a second end connected to said first-mentioned electromagnetic means.

15. Pickup apparatus as defined in claim 14, further comprising a series resistive-capacitive network connected to said second end of said second electromagnetic means.

16. Pickup apparatus as defined in claim 15, wherein said first-mentioned electromagnetic means includes a first hum-canceling pair of electrically conductive windings and said second electromagnetic means includes a second hum-canceling pair of electrically conductive windings.

17. Pickup apparatus as defined in claim 16, wherein said first and second hum-canceling pairs of windings are mounted adjacent each other.

18. Pickup apparatus as defined in claim 16, wherein said suppressing means includes a first electrically conductive loop around one of the windings of said first pair and a second electrically conductive loop around the other of the windings of said first pair.

19. Pickup apparatus as defined in claim 18, wherein said range of frequencies includes about 3,000 hertz to about 5,000 hertz.

20. Pickup apparatus as defined in claim 13, wherein said electromagnetic means includes a pair of electrically conductive windings connected in series and wherein said suppressing means includes a first electrically conductive loop around one of said windings and a second electrically conductive loop around the other of said windings, and further wherein said range of frequencies includes about 3,000 hertz to about 5,000 hertz.

21. Pickup apparatus as defined in claim 13, wherein said suppressing means includes wire wound adjacent said electromagnetic means.

22. Pickup apparatus as defined in claim 21, wherein said suppressing means consists of said wire and at least one other passive component.

23. Pickup apparatus as defined in claim 22, wherein said at least one other passive component is selected from the group consisting of resistors and capacitors.

24. Pickup apparatus as defined in claim 20, wherein each of said first and second electrically conductive loops consists of a respective closed loop of wire wound adjacent the respective one of said windings.

25. Pickup apparatus as defined in claim 20, wherein each of said first and second electrically conductive loops consists of respective wire and at least one other respective passive component.

26. Pickup apparatus for a stringed musical instrument, comprising:

first hum-canceling electromagnetic means for responding to string vibrations, including first and second windings connected in series;

a first overwinding adjacent said first winding;

a second overwinding adjacent said second winding;

second hum-canceling electromagnetic means for responding to string vibrations, including third and fourth windings connected in series, said second hum-canceling electromagnetic means connected in series with said first hum-canceling electromagnetic means; and

a series resistive-capacitive network connected in series with said second hum-canceling electromagnetic means and in parallel with said first hum-canceling electromagnetic means.

27. Pickup apparatus as defined in claim 26, further comprising a housing having at least said first and second hum-canceling electromagnetic means and said first and second overwindings disposed therein.

28. Pickup apparatus as defined in claim 26, wherein:

said first winding and said resistive-capacitive network have ends connected in common and adapted for connecting to an electrical ground;

said first winding has another end, connected to an end of said second winding;

said second winding has another end, connected in common with another end of said resistive-capacitive network and an end of said third winding;

said third winding has another end, connected to an end of said fourth winding; and

said fourth winding has another end, adapted for connecting to an amplification circuit.

29. Pickup apparatus as defined in claim 26, wherein:

said first overwinding includes a first wire, wound adjacent said first winding; and

said second overwinding includes a second wire, wound adjacent said second winding.

30. Pickup apparatus as defined in claim 29, wherein:

said first overwinding consists of said first wire and at least one other passive component; and

said second overwinding consists of said second wire and at least one other passive component.

* * * * *

Tom and Mary Anne Evans

GUITARS

Music, History, Construction and Players
From the Renaissance to Rock

Facts On File
119 West 57th Street, New York, N.Y. 10019

Library of Congress Cataloging in Publication Data

Evans, Tom, 1949–
Guitars: music, history, construction and players from the Renaissance to rock.

Bibliography: p.
Includes index.
1. Guitar. I. Evans, Mary Anne, joint author.
II. Title.
ML 1015.G9 E9 787'.61 77-4461
ISBN 0-87196-321-3
Previously 0-448-22240-X

Copyright © 1977 Tom and Mary Anne Evans
All rights reserved
Printed in the United States
Designed by Richard Johnson

ACKNOWLEDGMENTS

In creating this book we have received generous assistance from many musicians, instrument makers, museum curators and guitar enthusiasts. We owe special debts of gratitude to Nick Cousins, Juan Martin and John Pearse for their constant advice on numerous aspects of the guitar's music and history, and to our editor, Richard Ehrlich. We would also like particularly to thank the following:

Ken Achard; G. L. Taylor of the Ashmolean Museum; J. Ricart Matas of the Instrument Museum of the Barcelona Conservatory; David Bedford; Julius Bellson; Paulino Bernabe; Bob Bianco; I. C. Bishop; Bill Bogel; Kati Boland; Robert Bouchet; Christopher Burgon of the British Library Music Division; Michael Cameron; Agustin Castellón ("Sabicas"); John Honeysett of CBS/Arbiter; Valerie Cloake; John Cook; Diana Johnson of the Country Music Foundation; Celestine Dars; the Dolmetsch family; Ted Dunbar; Daniel Friedrich; Fred Frith; Walter Fuller; Patrick Aldworth, Gary Aumagher, Jim Beales, Kenneth Killman and Randal Wall of the Gibson company; John Gréven; Stefan Grossman; George Gruhn; Roland Harker; Harvey Hope; Keith Johns; Victoria Kingsley; Hubert Henkel of the Instrument Museum of Karl Marx University, Leipzig; Terry Lewis; David Lubell; Mario Maccaferri; F. H. Martin, Bud Hower, Mike Longworth and Donald Thompson of the C.F. Martin Company; Roy Mickleburgh; Simon Munting; David Roberts and David Seville of Norlin (London); Paul Oliver; Orange (London); Mme J. Bran-Ricci and Mme Florence Abondance of the Instrument Museum of the Paris Conservatory; Les Paul; Paco Peña; Robert Pliskin; José Ramirez III; John Roberts; José Romanillos; Elizabeth Wells of the Instrument Museum of the Royal College of Music, London; Richard Schneider; Peter Sensier; Martin Simpson; Helen Hollis of the Smithsonian Institution; the Spanish Guitar Centre, Bristol; the Spanish Guitar Centre, London; Maurice Summerfield; A. G. Grant of Top Gear (Shoreham); James Tyler; Julia Raynsford of the Department of Furniture and Woodwork, Victoria and Albert Museum; Timothy Walker; Abraham Wechter; Malcolm Weller.

In addition, we are grateful to the following record companies for their help:

ABC; Arhoolie; Biograph; Capitol; CBS/Columbia; Decca; Delmark; Deutsche Gramophon Gesellschaft; Folkways; Fonogram; Hispavox; Island; Polydor; Pye; RCA; Morningstar; Transatlantic; Universal Music Service Corporation; Vanguard; Virgin; WEA.

All photographs not otherwise credited were taken by Tom Evans.

Ovation "Electric Country Artist" acoustic-electric guitar, 1971.
Photograph by courtesy of Rose-Morris Ltd, London.

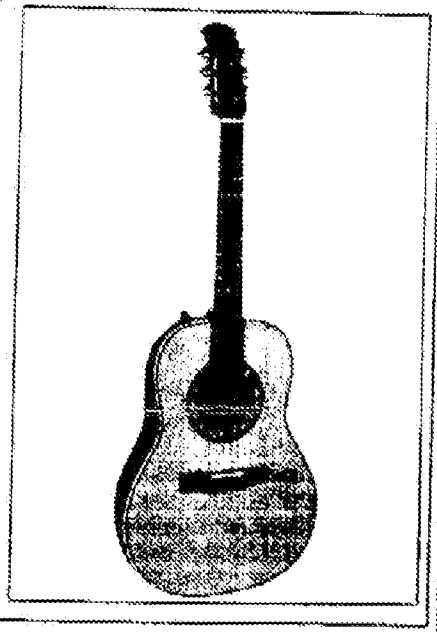

Piezo-electric transducers work equally well on nylon- and steel-string guitars. This is the amplified version of Ovation's "Country Artist," a guitar designed for steel-string players who wish to play nylon strings but feel uncomfortable on a classical guitar.

The "Electric Country Artist" uses Ovation's system of individual piezo-electric pickups for each string. The plastic saddle is divided into six sections, under each of which is a separate piezo-electric transducer, the whole assembly being contained in a black plastic trough pegged to the table. The output from the pickup unit is fed to a miniature battery-powered preamplifier by the forward endblock, which has a volume control and incorporates two filters to help give a balanced sound across the tonal range.

Ovation "Breadwinner," 1972.
Photograph by courtesy of Rose-Morris Ltd, London.

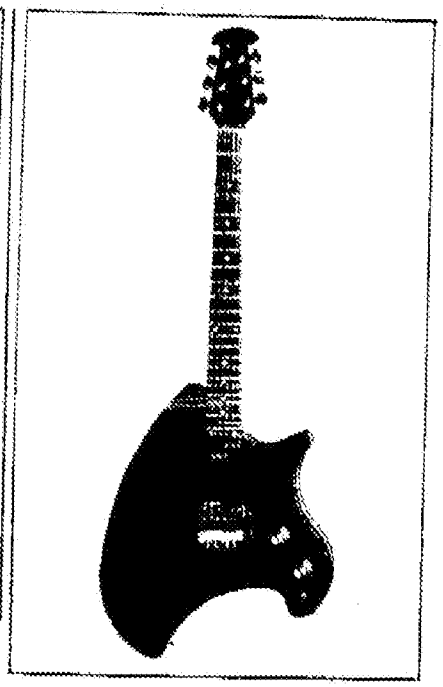

Overall length: 100.3cm
Scale length: 62.8cm
Fingerboard at nut: 4.3cm

Ovation entered the solid-body electric field in 1972 with the Breadwinner and Deacon (which is identical to the Breadwinner except that it has more expensive inlays and hardware). Both have an unconventional, asymmetric mahogany body and bolt-on twenty-four-fret neck. The bridge design is also out of the ordinary, bridge and tailpiece being combined in a single brass unit fitted with individually adjustable plastic saddles.

The electrics of the Breadwinner combine two hum-canceling pickups with a three-way selector switch, phase switch, master tone and volume controls, and a built-in transistorized preamplifier powered by a nine-volt battery. The preamplifier is designed to provide a constant output level whether the pickups are used singly or together, in or out of phase, whatever the position of the tone control.

Ovation solid-body guitars are surprisingly comfortable to play and are reasonably priced in view of their technical sophistication, but they have not as yet caught on widely among musicians. On past evidence, guitarists are quite conservative about the shape of their instruments (witness the lack of success of Gibson's Explorer and Flying V when they first appeared). It is also possible that they are wary of the built-in preamplifier.

Gibson L-6S, 1973.
Photograph by courtesy of Norlin Inc.

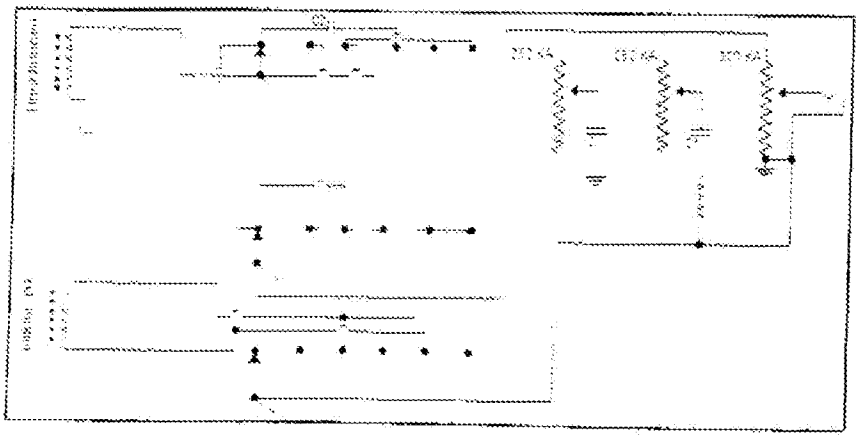

Overall length: 100.5cm
Scale length: 62.8cm
Body length: 41.8cm
Pickup centers: 50 and 59cm from nut
Fingerboard at nut: 4cm

The Gibson L-6S, introduced at the end of 1973, was designed by Bill Lawrence, who is widely regarded as one of the few genuinely outstanding designers of electric guitars.

The L-6S has interesting features in both its physical and electrical construction. It was designed to have twenty-four frets, two more

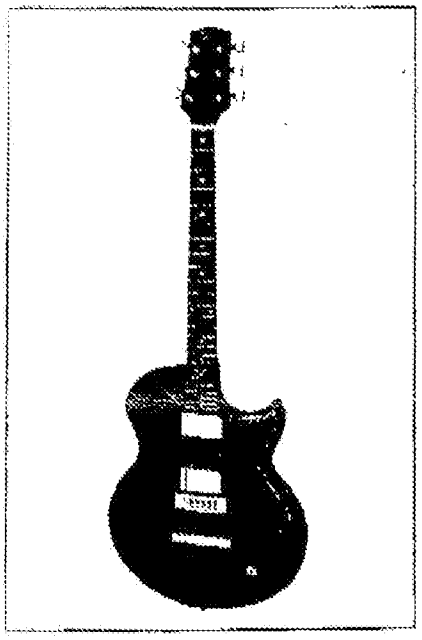

Gibson SG Standard, 1974.
Photograph by courtesy of Norlin Inc.

The SG series is Gibson's "other" long-running solid-body electric guitar series, alongside the even more famous Les Paul models. The immediately recognizable double-cutaway SG body shape was first introduced on the Les Paul Standard and Custom models manufactured in 1961, the designation of which was officially changed to SG later the same year.

The SG Standard has been produced continuously from 1961 to the present, except for a break in the period 1971 to 72. There have been numerous small modifications. The current design, which came in in 1974–5, has the familiar lightweight mahogany SG body, mahogany neck and rosewood fingerboard. The SG Standard is fitted with two superhumbucking pickups, with a straightforward wiring circuit. The other current SG models are the three-pickup Custom and the Special, which has two superhumbucking pickups encapsulated into plastic pickup covers.

In the past, numerous other guitars have been made by Gibson with the SG designation and twin-cutaway mahogany body. These include the SG I, II and III, SG Professional and Deluxe.

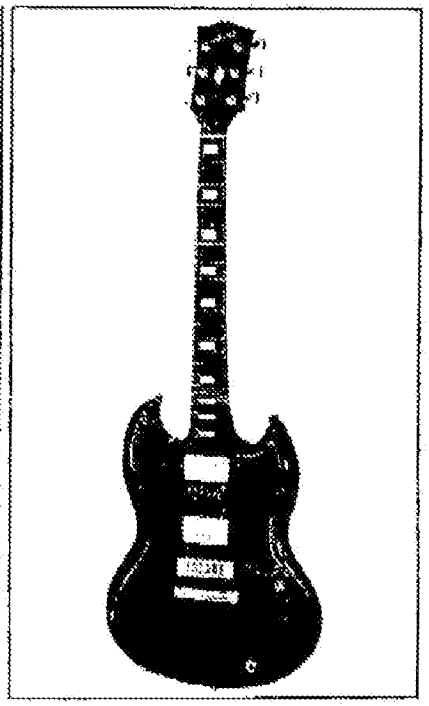

Veleno guitar, *c.* 1974.
Photographed at Top Gear, London.

Overall length: 98.5cm
Scale length: 63.5cm
Body length: 39.5cm
Body width 32.3cm max.
Body depth: 3.7cm
Pickup centers: 48.5 and 61.5cm from nut to active poles

John Veleno's company in St. Petersburg, Florida, specializes in all-aluminum guitars, which have some very strange features.

The body of the guitar is machined out of two solid pieces of aluminum, a front and a back, which are screwed together. The chan-

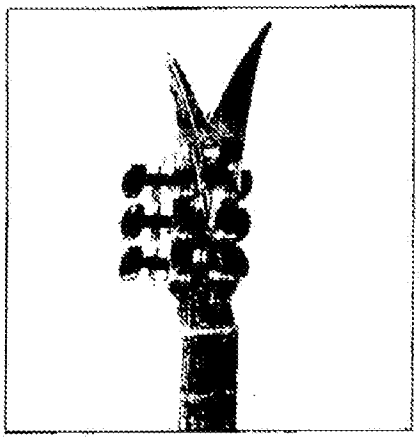

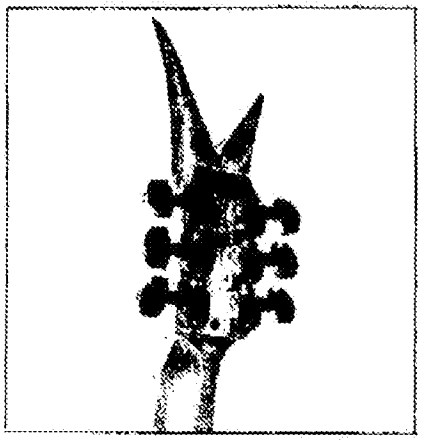

pick up unwanted noise; conventional electromagnetic pickups attached to the top or suspended in the soundhole are susceptible to feedback and produce too electric a sound.

The development of piezo-electric transducers since the mid-1960s has pointed the way to a possible solution of this problem. Piezo-electric transducers use materials (some natural, some synthetic) which produce an electric current when subjected to a physical stress. Some work under bending loads, others under direct pressure. The output of piezo-electric pickups is usually small, and often needs boosting by a preamplifier mounted either in the guitar or on the lead.

Since piezo-electric transducers work in response to physical force, they can be used with either steel or nylon strings, and either fitted to the soundboard of the guitar or built in to the bridge. The latter has proved to be the more satisfactory; transducers in the bridge respond to a combination of string and table vibration and cut down external noises of fingering, bumps and taps.

Ovation's acoustic-electric guitars are fitted with a separate piezo-electric element for each string, mounted beneath the saddle. Other piezo-electric pickups of proved effectiveness are the Barcus Berry Hot Dot and the FRAP (Flat Response Audio Pickup, invented by Arnie Lazarus in 1969), which are marketed for fitting to any acoustic guitar.

While electric guitars are now made throughout the world, the American companies remain almost unchallenged as producers of high-quality instruments. Their most serious rivals for export sales have been the Japanese, who have usually concentrated on producing cheap copies of the most successful American designs. But the Americans continue to be the innovators, and the Gibson company, above all others, steadily produces guitars that combine fresh ideas with quality craftsmanship.

The guitar gallery which follows contains a selection of electric guitars which has been made to illustrate general trends in instrument design as well as individually outstanding guitars.

* The only difference between batches of the standard Gibson humbucker has been that some have had coils wound on black cores and others wound on white. The color difference was caused only by the availability of pigment!

* The superhumbucking pickup, designed for Gibson by Bill Lawrence in 1971, uses three ceramic magnets in place of the single alnico magnet of the standard humbucker, producing a different type of output (see page 381).

King, B. B., 356, 395, 402–3, 412, 414–15, *415*, 416–17
King, Freddie, 414, *415*, 416
King, Pee Wee (and his Golden West Cowboys), *312*, *388*, 388
"King Biscuit Time," 392, 394
Kingston Trio, 323
Kiss, *423*, 424
Kithara, *11*, 11–12
Kneller, Andreas, 139
Koa wood, 242
Koch, Christopho, *see* Cocko, Christopho
Koester, Bob, 326
Kohno, Masaru, *72*
Konitz, Lee, 390
korina wood, 353
Korner, Alexis, 407
Kortchmar, Danny, 427
Kottke, Leo, *333*, 334
Kristofferson, Kris, 332

Lacôte, René, *49*, 52, 53, 54
lacquer, 69, 87, 267, 378–9; *see also* polish
Lady and the Unicorn, The, 330
Lafon, Jean, 62
Lagoya, Alexandre, 67, 123, 167
Laibman, Dave, 329
lamination, 80
Lancret, Nicolas, 144, *147*
Lancham, Robert, 134
Lang, Eddie, 226, 288, 301, 331
Lasky, Louie, 310
Latin America: stringed instruments in, 10, 18; guitar styles in, 55, 210–17 *passim*; influence on European music, 111, 123, 130, 162, 166, 224; flamenco in, 177–9
Lauro, Antonio, 123, 215
Law, Don, 295
Lawrence, Bill, 343*n*, 359
Layla, 427
Lazarus, Arnie, 343
Leadbelly (Huddie Leadbetter), 224, 258, 298–301, 321, 326, 407
Leadbelly's Last Session, 299
Léandre, Charles, 157, 161
Leçon de Musique, La (Boucher), *144*
LeCoq, François, 115
Led Zeppelin, 421, 423
Léger, Fernand, *160*
Legnani, Luigi Rinoldo, 49, 51, 119, 155
Leicester, Robert Dudley, Earl of, 134
Lely, Sir Peter, *140*
LeRoy, Adrian, 108, *109*, 109, 130, 132–4
Lester, Julius, 293
Levin Company (Sweden), 224
Lewis, Walter "Furry," 305
Libro del Buen Amor (Ruiz), 16
Libro de Música de Vihuela (Pisador), 105, *106*
Lightfoot, Gordon, 331
linings: diagram 76; construction, 95 (classical), 265 (steel-string)
Lipscombe Mance, 291, *327*, 328
Livre de Guitarre (LeRoy), 107, 108
Liszt, Franz, 156
Llobet, Miguel, 61, 122, *161*, 162, 193, 215
Lloyd, A. L., 330
Loar, Lloyd, *221*, 221, 226, 338–40
Lockwood, Robert, 395
Lomax, John and Alan, 299
London Sinfonietta, 126
Lone Star Cowboys, 316
López Nieto, Marcelino, 57, *72*, 83
Lorca, Garcia, 170, 176
Louis XIV, 26, 34, 111, 113, 137
Louis XIV's Musicians (Puget), *141*
"Love in Vain," 295, 296
Lowe, Mundell, 430
Lucas, Nick, 244, *318*
Lucena, Paco de (Francisco Díaz), 192
Lucía, Paco de (Francisco Sánchez Gómez), 170, *180*, 183, 190, 196–8, 200, 204
Ludovico (harpist), 104
Luis el de la Juliana, El Tío, 172
Lullaby for Ilian Rainbow (Maxwell-Davies), *127*, 127
Lully, Jean Baptiste, 111, 137
Lunar, Perico el del (Pedro del Valle), 177–8, 183, 187, 193
Lupot, François, 41–2, *46*
lute, 12, *19*, 26, 72, 165; popularity of, 16, 115, 129–30, 132; tone of, 30; music for, 101, 105, 108–13, *163*, 164
Lux y norte musical (Ruiz de Ribayez), 114
Lyon, Lutherie in, 134
Lyon, George Washburn, 223, 345
lyre, *11*, 11–12

"Macarrona, La," *177*
Maccaferri, Mario, *163*, 222, *227–8*; 232, *330*; G-40 style, *234–5*; pickup design, *352*
McClennan, Tommy, 307
McDowell, Fred, *327*, 328
McGee, Kirk, 313
McGee, Sam, 313, 319
McGhee, Brownie, 302, *308*, 308, *325*, 325, 405, 407
McGuinn, Roger, 362
McHugh, Ted, 229, 266
McLaughlin, John, 249, *366*, *429*, 429
McMichen, Clayton "Pappy," 313, *314*, 321
McMullen, Fred, 302

GUITAR WORLD

The Vintage Secret... Pot Luck

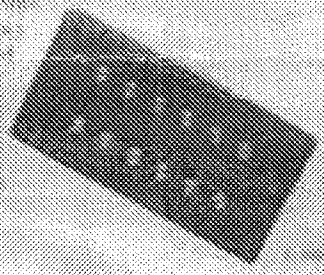

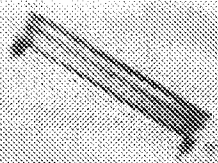

Keystone Pickups™ a totally new design concept!

For free information contact:

KEYSTONE PICKUPS

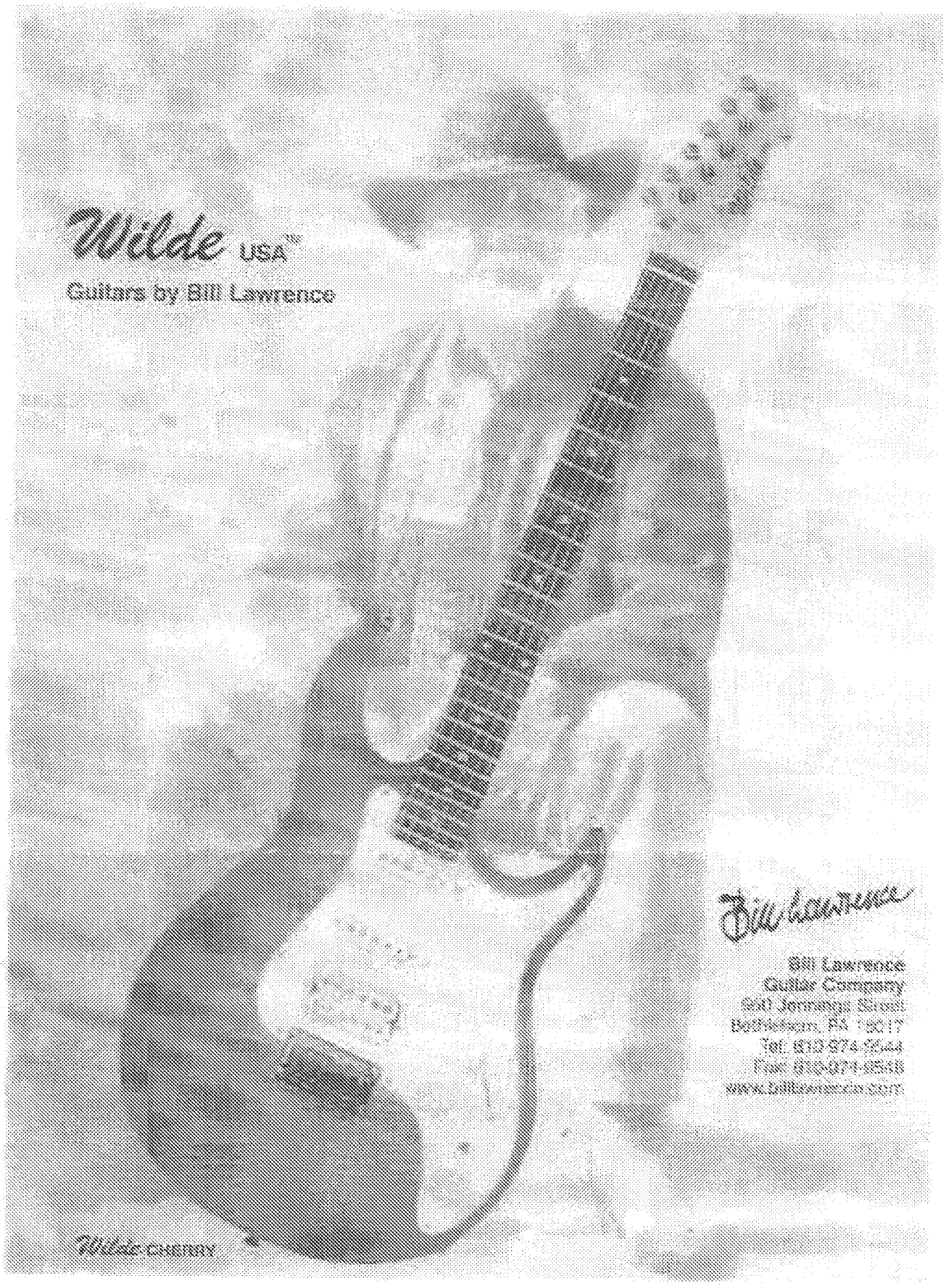
Wilde USA™
Guitars by Bill Lawrence
Bill Lawrence
Bill Lawrence
Guitar Company
Wilde CHERRY

Bill Lawrence, einer der führenden gitarristen im internationalen showgeschäft, hat auf grund 20-jähriger erfahrung den gitarrensound soweit verbessert, dass die gitarre auf de bühne mittels Lawrence pick up genauso klingt wie eine hochqualifizierte studioaufnahme

Bill Lawrence outstanding guitarist in international show business developed a tremendous guitar sound
Lawrence »true sound« pick ups make it possible that a guitar sounds on stage as well as on a high qualified studio recording

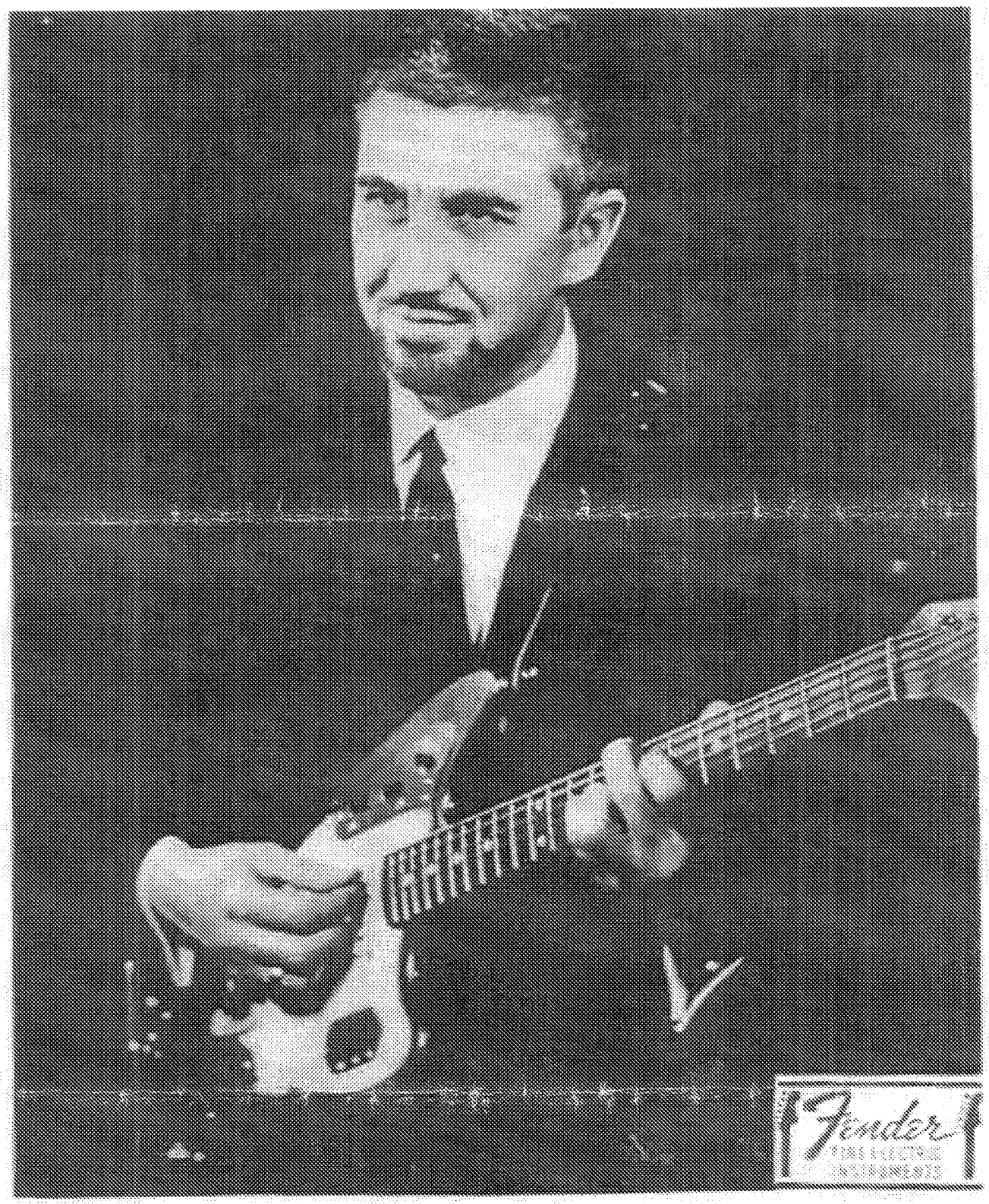

Bill Lawrence

MEMORANDUM

DATE:

TO: Chris Pedersen
Managing Attorney
Law Office 110

FROM: Jessie N. Roberts
Administrator for Trademark
Classification and Practice

RE: Letter of Protest concerning Application Serial No. 76594437

A Letter of Protest was granted in the above-identified application. You should determine whether the subject matter of the Letter should be counted as an error of the Examining Attorney. It is noted that the Examining Attorney inquired as to whether the name presented in the mark is a living individual to which the applicant responded that it was not. The evidence submitted by the protestor is found to be significant concerning this issue.

Then, the file should be given to the Examining Attorney for preparation of a letter in accordance with the information provided by the Letter of Protest. Since this Letter was granted before publication of the mark, jurisdiction is still with the Examining Attorney. Therefore, the Office action does not have to be approved by you or the Administrator for Policy and Procedure as it would be if jurisdiction had been restored to the Examining Attorney.