ESTTA Tracking number: **ESTTA335620**
Filing date: **03/04/2010**

IN THE UNITED STATES PATENT AND TRADEMARK OFFICE
BEFORE THE TRADEMARK TRIAL AND APPEAL BOARD

Proceeding	91190278
Party	Defendant Harmonic Drive L.L.C.
Correspondence Address	Bassam N. Ibrahim Buchanan Ingersoll & Rooney PC 1737 King St Alexandria, VA 22314-2727 UNITED STATES lloyd.smith@bipc.com
Submission	Opposition/Response to Motion
Filer's Name	S. Lloyd Smith
Filer's e-mail	lloyd.smith@bipc.com
Signature	/SLS/
Date	03/04/2010
Attachments	91190278OPP_TO_MSJ_REDACTED.pdf (17 pages)(798934 bytes) 91190278EXH_A_REDACTED.pdf (4 pages)(107857 bytes) 91190278EXH1.pdf (116 pages)(22416000 bytes) 91190278EXH2.pdf (74 pages)(4573585 bytes) 91190278EXH3.pdf (2 pages)(88516 bytes)

IN THE UNITED STATES PATENT AND TRADEMARK OFFICE
BEFORE THE TRADEMARK TRIAL AND APPEAL BOARD

NAC HARMONIC DRIVE, INC.,	)	
Opposer,	)	**TRADE SECRET/COMMERCIALLY SENSITIVE INFORMATION – SUBJECT TO THE BOARD'S STANDARD PROTECTIVE ORDER**
v.	)	
HARMONIC DRIVE L.L.C.,	)	
Applicant	)	Opposition No. 91190278
	)	**REDACTED**

APPLICANT'S OPPOSITION TO OPPOSER'S MOTION FOR SUMMARY JUDGMENT

Applicant, Harmonic Drive, L.L.C. ("Applicant"), hereby opposes Opposer, NAC Harmonic Drive's, ("Opposer") Motion for Summary Judgment for the reasons stated below.

I. INTRODUCTION AND STATEMENT OF FACTS

A. Summary of Argument

The Board must deny Opposer's Motion for Summary Judgment because Opposer has not established that HARMONIC DRIVE is generic as a matter of law and there are multiple issues of material fact that remain. Specifically, the Board will recognize the following genuine issues of fact:

(i) Opposer's identification of the genus of Applicant's goods cannot establish as a matter of law that HARMONIC DRIVE is generic for each of Applicant's goods. Opposer has defined the genus of Applicant's goods as a "gear drive;" however, there are multiple different goods listed in Applicant's identification, which each have a different genus. Thus, a material question of fact remains regarding what is the correct genus of Applicant's goods and if HARMONIC DRIVE represents the generic name for each one of Applicant's goods;

(ii) Opposer has not presented any evidence that consumers recognize HARMONIC DRIVE as a generic term. Opposer's evidence alleges third party misuse and is either inadmissible or not properly verified. A material question of fact remains as to whether this evidence is sufficient to prove that consumers recognize HARMONIC DRIVE as generic;

(iii) Finally, Applicant has submitted extensive use of HARMONIC DRIVE as a trademark by Applicant and its predecessors in interest for over 50 years and also owns two incontestable trademarks that comprise the term HARMONIC DRIVE. This evidence shows that consumers recognize Harmonic Drive as a trademark solely designating Applicant's goods, and creates a genuine issue of material fact as to whether HARMONIC DRIVE is generic.

Accordingly, the Board must deny Opposer's motion for summary judgment because there are several issues of fact that remain and the evidence establishes that HARMONC DRIVE is a source-identifying trademark for Applicant's goods.

B. Applicant's Longstanding Use and Registration of Its HARMONIC DRIVE Trademark

Applicant, through its predecessors in interest and related companies, has used HARMONIC DRIVE as a trademark since at least as early as 1964. Applicant and its related entities are the owner of the following trademark applications and registrations, all which comprise the term HARMONIC DRIVE:

Trademark	Ser./Reg. No.	Goods/Services	Owner	Status/Key Dates
HARMONIC DRIVE TECHNOLOGIES Disclaimer: "DRIVE TECHNOLOGIES"	1,728,918	(Int'l Class: 7) Electric motors, adjustable couplings, drives, transmissions in the nature of speed and power increasers and reducers (Int'l Class: 9) Stepping motors and servo actuators in the nature of electromechanical stepping devices for positioning in response to electrical control signals	Nabtesco Usa, Inc. (Delaware Corp.) 1013 Centre Road Wilmington, Delaware 19805	Renewed 8 & 15 November 3, 2002
HARMONIC DRIVE TECHNOLOGIES and Design Harmonic Drive TECHNOLOGIES Disclaimer: "DRIVE TECHNOLOGIES"	1,727,054	(Int'l Class: 7) Electric motors, adjustable couplings, drives, transmissions in the nature of speed and power increasers and reducers (Int'l Class: 9) Stepping motors and servo actuators in the nature of electromechanical stepping devices for positioning in response to electrical control signals	Nabtesco Usa, Inc. (Delaware Corp.) 1013 Centre Road Wilmington, Delaware 19805	Renewed 8 & 15 October 27, 2002
HARMONIC DRIVE	77-373925	(Int'l Class: 7) Electric motors; motor	Harmonic Drive	Published -

Trademark	Ser./Reg. No.	Goods/Services	Owner	Status/Key Dates
HARMONIC DRIVE Disclaimer: "DRIVE"		shaft retention brakes; adjustable shaft couplings and couplings for machines; servo motors for positioning in response to electrical control signals; drives and transmissions in the nature of speed and power increasers and reducers, all except for land vehicles (Int'l Class: 9) Electric rotary actuators and electronic controllers for producing control signals for electric rotary actuators and motor shaft retention brakes	L.L.C. (Delaware Limited Liability Company) 247 Lynnfield Street Peabody, Massachusetts 019604905	Opposed May 19, 2009
HARMONIC DRIVE and Design Harmonic Drive Disclaimer: "DRIVE"	77-391285	(Int'l Class: 7) Stepping motors for machines; electric motors for machines; machine couplings and transmission components except for land vehicles, namely, adjustable couplings, drives, and transmission components in the nature of speed and power increasers and reducers (Int'l Class: 9) Electronic servo motor controllers, namely, actuators in the nature of electromechanical stepping devices for positioning in response to electrical control pulses	Nabtesco Usa Inc. (Delaware Corp.) 1013 Centre Road Wilmington, Delaware 19805	Pending - Suspended January 23, 2009

U.S. Reg. Nos. 1,728,918 and 1,727,054, owned by Applicant's parent company, Nabtesco USA, Inc. for the marks HARMONIC DRIVE TECHNOLOGIES and HARMONIC DRIVE TECHNOLOGIES and design are incontestable. Applicant is entitled to the benefit of these registrations by virtue of unity of control amongst the companies, in which the companies are operating as a single source for purposes of the HARMONIC DRIVE trademark.

In 1955, C. Walton Musser, while working with Applicant's predecessor company, United Shoe Machinery ("USM") invented the concept of "strain wave gearing," which is subject to expired U.S. Patent No. 2,906,143. Mr. Musser coined the trademark "HARMONIC DRIVE" to refer to USM's products. Following Mr. Musser's coining of the term HARMONIC DRIVE and invention of "strain wave gearing," Applicant, through its predecessors in interest and related companies, has been selling products under the HARMONIC DRIVE and HARMONIC DRIVE TECHNOLOGIES trademark since at least as early as 1964.

Applicant currently uses the HARMONIC DRIVE trademark to designate its entire product line, including goods such as actuators, electric motors, servo motors, gearheads, and transmissions. Applicant sells its high precision motion control products to customers in numerous industries via catalog, telephone, fax, email, and direct in-person sales. Ex. A, Declaration of Zhongmin Yang ("Yang Decl.") ¶2. Since its inception in 2006, Applicant has spent $[redacted] in advertising and marketing products sold under the HARMONIC DRIVE brand and generated $[redacted] in sales of products sold under the HARMONIC DRIVE trademark. *Id.* at ¶3. Prior to formation of Applicant's company, Applicant's predecessors in interest and related companies sold [redacted] units, or $[redacted] in sales, of products bearing the HARMONIC DRIVE trademark. *Id.* at ¶4. These companies spent $[redacted] advertising and marketing its HARMONIC DRIVE products from 2000-2005. *Id.* at ¶4. Applicant's related companies also distribute and sell its products globally, in [redacted] other countries worldwide. *Id.* at ¶5. As a result of Petitioner's long, extensive, and widespread use of HARMONIC DRIVE in connection with its products, consumers associate HARMONIC DRIVE exclusively with Applicant and its related companies. *Id.* at ¶5.

II. STANDARD

A. Standard for Summary Judgment

Summary judgment is appropriate where there are no genuine issues of material fact and a case can be resolved as a matter of law. Fed. R. Civ. P. 56(c). A party moving for summary judgment has the burden of demonstrating the absence of any genuine issue of material fact. *Sweats Fashions Inc. v. Pannill Knitting Co. Inc.*, 833 F.2d 1560, 1562-63

(Fed Cir. 1987). When the moving party's motion is supported by evidence demonstrating the absence of a genuine issue of material fact, the burden shifts to the nonmoving party to demonstrate the existence of genuinely disputed issues of fact that must be resolved at trial. *Id.* A dispute as to a material fact is "genuine" only if a reasonable fact finder viewing the entire record could resolve the dispute in favor of the nonmoving party. *Olde Tyme Foods Inc. v. Roundy's Inc.*, 961 F.2d 200, 22 USPQ 2d 1542, 1544 (Fed. Cir. 1992).

The question of whether a term is generic is a question of fact. *See, e.g., In re Dial-A-Mattress Operating Corp.*, 57 U.S.P.Q.2d 1807, 1810 (Fed. Cir. 2001). When viewing Opposer's allegations in the Motion for Summary Judgment in the light most favorable to Applicant, issues of material fact remain concerning whether the term HARMONIC DRIVE is generic. Accordingly, Opposer is not entitled to Summary Judgment and its motion should be denied.

B. Standard for Holding a Term Generic

A mark is a generic name if it refers to the class, genus or category of goods and/or services on or in connection with which it is used. *See Dial-A-Mattress*, 240 F.3d 1341, 1344, 57 USPQ2d 1807, 1810 (Fed. Cir. 2001)(citations omitted). The test for determining whether a mark is generic involves a two-step inquiry. First, what is the genus (category or class) of goods or services at issue? Second, is the term sought to be registered understood by the relevant public primarily to refer to that genus (category or class) of goods or services? *H. Marvin Ginn Corp. v. International Assoc. of Fire Chiefs, Inc.*, 782 F.2d 987, 990, 228 USPQ 528, 530 (Fed. Cir. 1986). Opposer has not established, when viewing the evidence in the light

most favorable to Applicant, that HARMONIC DRIVE is understood by the purchasing public to refer to the genus of applicant's goods.

III. ARGUMENT

A. Opposer Has Not Established as a Matter of Law that Applicant's Mark is Generic

i. Opposer's Incorrect Identification of the Genus of Applicant's Goods Creates Several Issues of Face the Board Must Resolve

In the first step of a genericness analysis, the genus of the goods must be identified. Opposer correctly notes that "a proper genericness inquiry focuses on the description of goods as set forth in the application." *Magic Wand Inc. v. RDB Inc.*, 940 F2d 638, 640, 19 USPQ2d 1551, 1552 (Fed. Cir. 1991) (citing *Octocom Sys., Inc. v. Houston Computer Servs., Inc.,* 918 F.2d 937, 942, 16 USPQ2d 1783, 1787 (Fed. Cir. 1990). Curiously, however, Opposer has identified the genus of Applicant's goods as "a gear drive." Applicant disagrees with this contention. The genus of each of Applicant's goods is the following underlined term, as viewed in its identification of goods: "<u>Electric motors; motor shaft retention brakes</u>; <u>adjustable shaft couplings</u> and <u>couplings for machines</u>; <u>servo motors</u> for positioning in response to electrical control signals; <u>drives</u> and <u>transmissions in the nature of</u> <u>speed and power increasers and reducers</u>" and "<u>Electric rotary actuators</u> and <u>electronic controllers</u> for producing control signals for electric rotary actuators and motor shaft retention brakes" (emphasis added). Opposer has focused its analysis on whether HARMONIC DRIVE refers to the genus of a "gear drive." The question of whether the genus of Applicant's goods is a "gear drive" (as Opposer contends) or each different good listed in the identification has a separate genus (as Applicant contends) is a material question of fact the Board must decide. This question, on its own, should serve as a basis for denial of Opposer's Motion for Summary Judgment.

In addition, where the term in question has been used as a source indicator for many different types of products, the term cannot be generic because it has been used to identify the source of more than one "genus" of products. *See Telecron, Inc. v. Telicon* Corp, 198 F.2d 903, 907, 94 USPQ 363, 366 (3rd Cir. 1952). (TELECHRON viewed as a trademark by virtue of its use on a wide variety of dissimilar electric time-pieces); *In re Automatic Radio Mfg. Co.*, 160 U.S.P.Q. 233, 265-66 (C.C.P.A. 1969) (AUTOMATIC RADIO when used on air conditioners, ignition systems, antennas and radios not viewed as generic); *Enders Razor Co. v. Christy Co.*, 85 F.2d 195, 197, 30 USPQ 213, 215 (6th Cir. 1936) ("The fact that the name Keen Kutter was used on other totally different products long before these patents were issued, and that an extensive good will was built up around its use, irrespective of the patents and before the razors were sold, seems to us conclusively to show that this term is not generic"). Thus, there is a material issue of fact concerning whether HARMONIC DRIVE can be held generic where it has been used as a source indicator for more than one genus of goods. This issue further mandates the Board's denial of Opposer's Motion for Summary Judgment.

ii. Applicant's Evidence of Extensive Use of Harmonic Drive as a Trademark Establishes an Issue of Fact That Mandates Denial of Opposer's Motion

The term HARMONIC DRIVE has been used as a trademark for over 50 years to indicate the source of Applicant, its predecessors in interest, and related companies' goods. Applicant's parent company owns two incontestable trademark registrations that comprise the term HARMONIC DRIVE: U.S. Reg. No. 1,728,918 for the mark HARMONIC DRIVE TECHNOLOGIES and U.S. Reg. No. 1,727,054 for the mark HARMONIC DRIVE TECHNOLOGIES and design. Ownership of a federal trademark registration is prima facie evidence that the term is not generic. *See* 15 U.S.C. §1115(b); *see, e.g., Coca-Cola Co. v.*

Overland, Inc., 692 F.2d 1250, 1254, 216 USPQ 579, 582 (9th Cir. 1982); *Miss World (UK), Ltd. v. Mrs. America Pageants, Inc.*, 856 F.2d 1445, 1448, 8 USPQ2d 1237, 1240 (9th Cir. 1988) (noted in dicta). Thus, Opposer faces a high burden of establishing that HARMONIC DRIVE is not a source-indicator for Applicant's goods.

As evidence of Applicant's long, widespread, and continuous use of HARMONIC DRIVE as a trademark, applicant attaches a representative sample of advertising and marketing material from Applicant, its related companies, and its predecessors in interest. Ex. A, Yang Decl. at Ex. 1. This evidence shows Applicant's pervasive use of HARMONIC DRIVE as a trademark to designate its products. Further, Applicant also attaches various articles, patents and a customer purchase order that show use of HARMONIC DRIVE as a trademark. Ex. A, Yang Decl. at Exs. 2 and 3. Applicant's extensive use of HARMONIC DRIVE as a trademark establishes an issue of material fact that mandates denial of Opposer's Motion for Summary Judgment.

iii. The Consuming Public Recognizes Harmonic Drive as a Trademark Solely Designating the Source of Applicant's Goods

The second step in a genericness inquiry is whether "the public views the term sought to be registered as the genus for the applied-for goods." *See H. Marvin Ginn, 782 F.2d at 990, 228 USPQ at 530.* This is an issue that Opposer has failed to address by only presenting evidence that HARMONIC DRIVE is generic for a "gear drive." Regardless of Opposer's failure to submit sufficient evidence to prove its allegations, Applicant has submitted various evidence that the consuming public recognizes HARMONIC DRIVE as a trademark to rebut Opposer's unsubstantiated claims.

Applicant has provided various evidence to rebut Opposer's allegation that HARMONIC DRIVE is generic. Applicant's evidence overwhelmingly indicates consumers view HARMONIC DRIVE as a trademark designating the source of Applicant's goods. Specifically, Applicant's evidence attached as Exhibits A-2 and A-3 shows third-party use of the term HARMONIC DRIVE which acknowledges the trademark significance of the term. Finally, Applicant attaches as Exhibit A-1 various evidence of use by Applicant, its related companies, and predecessors in interest, which show trademark use of the term HARMONIC DRIVE. Collectively, this evidence establishes a question of fact, which must be further evaluated by the Board, as to whether the public views the term HARMONIC DRIVE as a trademark designating the source of Applicant's goods. Accordingly, the Board should deny Opposer's Motion for Summary Judgment because a genuine issue of material fact still exists concerning whether HARMONIC DRIVE is generic for "electric motors, motor shaft retention brakes; adjustable shaft couplings; couplings for machines; servo motors for positioning in response to electrical control signals; drives in the nature of speed reducers, power increasers, and reducers; transmissions in nature of speed reducers, power increasers, and reducers; electric rotary actuators; and electronic controllers."

B. Opposer Does Not Provide Sufficient Evidence to Meet the High Burden of Establishing that Harmonic Drive is Generic

i. Opposer's Evidence Must be Stricken, or in the Alternative, Given No Weight

Applicant collectively objects to all of Opposer's evidence as improperly verified, unauthenticated, incomplete, misidentified, and derived from foreign sources and moves that the Board strike this evidence from the record or accord it no probative value. Specifically, Opposer's evidence falls into the following categories, (i) Internet evidence of use of

HARMONIC DRIVE; (ii) Dictionary and encyclopedia evidence of use of HARMONIC DRIVE; (iii) Excerpts from scientific articles using the term HARMONIC DRIVE; (iv) a printout of U.S. Patents purporting to contain the term HARMONIC DRIVE; and (v) USPTO file histories for abandoned trademarks containing the term HARMONIC DRIVE. Applicant details its objection to each of these categories below.

Applicant objects to the entirety of Opposer's Internet evidence as not properly identifying the URL of each website printout and not clearly indicating the nature, source and date of the materials. *See Racioppi v. Apogee Inc.,* 47 USPQ2d 1368, 1370 (TTAB 1998). As Opposer's evidence lacks the URL of the website, the nature and date of the materials, and the method in which Opposer searched, obtained, and uncovered the Internet evidence, Applicant is unable to corroborate or refute the authenticity of the website printouts. *See Weyerhaeuser Co. v. Katz*, 24 USPQ2d 1230, 1232 (TTAB 1992). Accordingly, the Board should not consider this evidence when evaluating the Motion for Summary Judgment.

A number of the Internet printouts and scientific articles Opposer has included as evidence appear to be derived from foreign sources. Opposer has not provided any supporting evidence that indicates this foreign evidence was published or circulated in the United States or that United States consumers would adopt the information contained in developing an opinion on the significance of the term HARMONIC DRIVE. *See Hard Rock Cafe Int'l. (USA) Inc. v. Elsea,* 56 USPQ2d 1504, 1507 (TTAB 2000) (stating that excerpts are inadmissible to the extent they are incomplete, illegible, not fully identified as to the name and date of the source, or unintelligible because they are from a foreign source). Further to the extent that Opposer has included articles from Wikipedia or other Internet websites which allow third-party editing,

such as Answers.com, Applicant objects to these articles as uncorroborated by other reliable sources. *See In re IP Carrier Consulting Group*, 84 USPQ2d 1028, 1032 (TTAB 2007).

Opposer has included excerpts of several scientific articles that reference the term HARMONIC DRIVE. Applicant objects to this evidences as incomplete because Opposer has not included the entirety of each of the scientific articles, nor has Opposer identified the databases or publications where these specific articles were found. Further, Opposer has not provided evidence that consumers of Applicant's goods are aware of the information contained in these scientific publications. Accordingly, all of these articles should be disregarded by the Board because they are excerpts. *See Weyerhaeuser,* 24USPQ2d at 1232 (noting that a party who wishes to support an article of general circulation can submit a copy of the article from the Nexis/Lexis database); *Hard Rock,* 56 USPQ2d at 1504.

Opposer has included a listing of patents that purport to contain the term HARMONIC DRIVE: a copy of a portion of the file history of U.S. Application Serial No. 77/030,648 ("648 application") and a copy of U.S. Registration No. 1,540,128. With respect to the listing of patents, Applicant objects to the Board's consideration of this evidence as it includes a mere listing of patent numbers and does not include the actual text of the patents for verification. Applicant objects to the inclusion of the file history of the 648 application because the information has not been properly verified or authenticated by Opposer and is an incomplete copy of the application file history of 648 application. In particular, Opposer has neglected to include the Office Action where the Examining Attorney withdrew the subject descriptiveness refusal. Finally, Opposer cites U.S. Registration No. 1,540,128 as evidence of the generic use of the term HARMONIC DRIVE in trademark identification of goods. Applicant objects to this evidence as improperly verified and irrelevant. Opposer has neglected to acknowledge

TMEP § 1402.09 which permits Applicant to use "its own registered mark in an identification of goods or services in its own application." HD Systems, Inc. is a predecessor in interest to Applicant and a related company to Nabtesco USA, Inc., owner of the HARMONIC DRIVE TECHNOLOGIES trademarks. As such, HD Systems has not used the term HARMONIC DRIVE in a generic sense in U.S. Reg. No. 1,540,128, but has merely used its own registered mark in identifying its own products.

Opposer identifies various exhibits in support of its Motion for Summary Judgment, both in the body of the text and in an affidavit signed by Opposer's Attorney that is attached to the Motion (identified as Exhibit A in the body of the motion), yet the documents attached to the Motion are neither marked, nor in direct correspondence to the Exhibit labels provided by Opposer in the body of the Motion or the affidavit. To the extent that the information provided in and attached to Opposer's affidavits is not specifically identified, Applicant objects to this evidence and requests that that the Board give it no weight. *See Missouri Silver Pages Directory Publishing Corp. Inc. v. Southwestern Bell Media, Inc.*, 6 USPQ2d 1028, 1031 (TTAB 1988).

Applicant has used its best efforts to evaluate the Exhibits and make appropriate objections thereto. Applicant incorporates the objections raised above, and offers the following specific comments in objection to Opposer's evidence:

Attached evidence	**Comments/Objection**
Advertisement from HD Systems, Inc. captioned "World of Harmonic Drive Gearing"	Opposer has not properly authenticated this document.
Application file History 77030648	Opposer has not properly admitted or authenticated this file; Information contained in evidence is incomplete and irrelevant.
Google search	Opposer has not included any of the actual websites uncovered in the Google

	search; thus the search should be excluded since the websites listed therein were not made of record and cannot be reviewed or verified
Answers.com Harmonic Drive definition	Internet evidence not properly verified or corroborated with additional evidence
Wikipedia.com Harmonic Drive	Internet evidence not properly verified or corroborated with additional evidence
Free Online Dictionary - Harmonic Drive -- McGraw Hill Dictionary of Science and Technical Terms – 2003	Internet evidence not properly verified or corroborated with additional evidence
Answers.com Harmonic Drive definition (redundant)	Evidence is duplicative; earlier objections incorporated
Harmonic Drive - Encyclopedia Brittanica	Internet evidence not properly verified or corroborated with additional evidence
McGraw Hill Series of Mechanical Engineering -- 1970 - Harmonic Drive entry	Entirety of book not entered into record; Not properly verified
Modelling and Paramater Identification of Harmonic Drive Systems -- McGill University, Montreal	Information not properly verified; excerpt of article; derived from foreign source with no evidence of U.S. distribution
ABB Ultra low Harmonic Drive	Internet evidence not properly verified
VLT Low Harmonic Drives	Internet evidence not properly verified; does not refer to products sold by applicant
HD Systems -- Hollow Shaft Actuators with Harmonic Drive gearing	Internet evidence not properly verified
ICH Motion printout -- Harmonic Driver	Internet evidence not properly verified; Does not show use of HARMONIC DRIVE
Springerlink - Harmonic Drive gear with controllable transmission ratio	Article excerpts inadmissible; Internet evidence not properly verified; scope of distribution unclear- appears to be foreign source
Springerlink - Disturbance observer-based adaptive feedforward cancellation of torque ripples in harmonic drive systems	Article excerpts inadmissible; Internet evidence not properly verified; scope of distribution unclear- appears to be foreign source

Springerlink (copy of article not included -- Extreme aspect ratio NiFi gear wheels for the production of commercially available Micro Harmonic gears)	Article excerpts inadmissible; Internet evidence not properly verified; scope of distribution unclear- appears to be foreign source; Harmonic Drive identified as a trademark
Springerlink -- investigation of the fatigue properties of rigid polymers used in making harmonic drives	Article excerpts inadmissible; Internet evidence not properly verified; scope of distribution unclear- appears to be foreign source
Spingerlink -- A new control algorithm for Manipulators with Joint Flexibility	Article excerpts inadmissible; Internet evidence not properly verified; scope of distribution unclear- appears to be foreign source
IEEE Explore -- Modeling a harmonic drive gear transmission	Article excerpts inadmissible; Internet evidence not properly verified
Listing of Patents	Status and/or full text of patents not submitted
Reg. No. 1,540,128 for HD System and design	Irrelevant
Gears Hub.com -- Listing of types of "Gear Drives" includes "Harmonic Drive"	Internet evidence not properly verified
Ashoka Group - gear drives include the following -- lists "Harmonic Drives"	Internet evidence not properly verified; scope of distribution unclear- appears to be foreign source
roymech.co.uk - includes chart of gear types, which lists "Harmonic Drive"	Internet evidence not properly verified; scope of distribution unclear- appears to be foreign source
www.harmonicdrive.com website	Internet evidence not properly verified; contains no information concerning applicant's goods

Opposer's evidence fails to support its allegation that HARMONIC DRIVE is generic because the Board must properly disregard or give no weight to the majority of the evidence submitted by Opposer. Further, even in the event that the Board accepts some of Opposer's evidence, Applicant submits that this evidence does not establish that HARMONIC DRIVE is generic as a matter of law. Accordingly, the Board must evaluate genuine issues of material fact concerning whether Opposer's evidence is admissible, relevant, and provides the requisite level of proof that the term HARMONIC DRIVE is generic.

ii. Opposer's Evidence Does Not Support a Conclusion That Harmonic Drive is a Generic Indicator of Applicant's Goods

As indicated above, the majority, if not all, of the evidence submitted by Opposer should not be considered by the Board as supporting Opposer's claim that consumers view HARMONIC DRIVE as a generic term for a gear drive. To the extent that the Board accepts any of Opposer's evidence, Applicant submits that this evidence is *de minimis* and not sufficient to meet the high burden of proof that the term HARMONIC DRIVE is generic. As noted above, the Opposer argues that HARMONIC DRIVE is the generic name for "gear drive" -- a term that does not appear anywhere in Applicant's identification of goods. As such, Opposer has submitted arguments and evidence in support of a position that is factually irrelevant to the question at hand.

Opposer's evidence does not provide any information concerning how the purchasing public views the term HARMONIC DRIVE because none of the third-party evidence included actually shows use of the HARMONIC DRIVE in connection with applicant's goods. If anything, all that Opposer's evidence establishes is third party misuse in connection with a gear drive. A trademark owner does not need to object to all infringing and unauthorized uses of its trademark, so long as the public still perceives source-indicating significance of the trademark. *Elizabeth Taylor Cosmetics Co. v. Annick Goutal, S.A.R.L.*, 5 U.S.P.Q.2d 1305, 1313 (S.D.N.Y. 1987).; *Cullman Ventures, Inc. v. Columbian Art Works, Inc.*, 13 U.S.P.Q.2d 1257, 1279-80 (S.D.N.Y. 1989). In addition, Opposer's evidence comprising an advertising brochure of Applicant favors Applicant's position because it shows clear trademark use of HARMONIC DRIVE as designating the source of Applicant's products. Accordingly, there is a genuine issue of material of fact concerning whether HARMONIC DRIVE is a source indicator for

applicant's goods because Opposer's evidence fails to establish that HARMONIC DRIVE is generic for a "gear drive," much less the genus of each of Applicant's goods as identified in the application as "electric motors, motor shaft retention brakes; adjustable shaft couplings; couplings for machines; servo motors for positioning in response to electrical control signals; drives in the nature of speed reducers, power increasers, and reducers; transmissions in nature of speed reducers, power increasers, and reducers; electric rotary actuators; and electronic controllers."

IV. CONCLUSION

Applicant has identified numerous material factual issues that support a conclusion that the term HARMONIC DRIVE is a source-identifying trademark. Accordingly, these issues of material fact prevent the Board from granting Opposer's Motion for Summary Judgment. Therefore, Applicant requests that Opposer's Motion be denied and that the Board issue a ruling that resumes the proceedings.

Respectfully submitted,

Harmonic Drive, L.L.C.

By: _____

Bassam N. Ibrahim
S. Lloyd Smith
Attorneys for Applicant
Buchanan Ingersoll & Rooney PC
1737 King Street
Alexandria, Virginia 22314-2727
Telephone: 703-836-6620

Date: March 4, 2010

CERTIFICATE OF SERVICE

I hereby certify that a true copy of the foregoing APPLICANT'S OPPOSITION TO OPPOSER'S MOTION FOR SUMMARY JUDGMENT was served this 4th day of March 2010 by first-class mail, postage prepaid, on:

Michael J. Feigin
Law Firm of Michael J. Feigin, Esq.
103 The Circle
Passaic, NJ 07055

Jean Bayou

EXHIBIT A

IN THE UNITED STATES PATENT AND TRADEMARK. OFFICE
BEFORE THE TRADEMARK TRIAL AND APPEAL BOARD

NAC HARMONIC DRIVE, INC., Opposer, v. HARMONIC DRIVE L.L.C., Applicant.	**TRADE SECRET/COMMERCIALLY SENSITIVE INFORMATION – SUBJECT TO THE BOARD'S STANDARD PROTECTIVE ORDER** Opposition No. 91190278 **REDACTED**

DECLARATION OF ZHONGMIN YANG

I, Zhongmin "Joe" Yang, hereby declare as follows:

1. I am Executive Vice President for Harmonic Drive, L.L.C. (" Harmonic Drive").

2. Harmonic Drive, L.L.C. sells high precision motion control products such as precision gears, gearheads, servo actuators and motion control systems to numerous industries via catalog, telephone, fax, email, and direct in-person sales.

3. Since its inception in 2006, Harmonic Drive has spent $[redacted] in advertising and marketing products sold under the HARMONIC DRIVE trademark and generated $[redacted] in sales of products sold under the HARMONIC DRIVE trademark.

4. Prior to formation of Harmonic Drive, Harmonic Drive's predecessors in interest and related companies had been selling products bearing the HARMONIC DRIVE trademark since the early 1960's. From 2000-2005, these companies sold an estimated [redacted] units, or $[redacted] in sales, of products bearing the HARMONIC DRIVE trademark, and spent an estimated $[redacted] advertising and marketing HARMONIC DRIVE products.

5. Harmonic Drive and its related companies also distribute and sell its products globally, in [redacted] other countries worldwide. As a result of Harmonic Drive's long, extensive, and widespread use of HARMONIC DRIVE in connection with its products, consumers associate HARMONIC DRIVE exclusively with Harmonic Drive and its related companies.

6. As evidence of Harmonic Drive's, its related companies', and its predecessors in interest's long, widespread, and continuous use of HARMONIC DRIVE as a trademark, attached as Exhibit 1 are a representative sample of advertising and marketing materials.

7. Attached as Exhibit 2 are the following articles and patents that show use of HARMONIC DRIVE as a trademark.

a. R. Degen & R. Slatter, The MICRO HARMONIC DRIVE® A HIGH PRECISION MICRO GEAR SYTEM MINATURIZED BY LIGA; The 9th International Symposium on Transport Phenomena and Dynamics of Rotating Machinery (Honolulu, Hawaii, 10th-February, 2002).

b. United States Patent No. 4,557,662. INDUSTRIAL ROBOT; Tsuneo Terauchi; Yoshikazu Masuda, Inventors. (Issued December 10, 1985).

c. United States Patent No. 6.564,888. BIPED MOBILE ROBOT; Hiroshi Gomi; Kazushi Hamaya; Takashi Matsumoto, Inventors. (Issued May 20, 2003).

d. United States Patent Publication No. US 2009/0008887 A1. VEHICLE STABILIZER SYSTEM.Shuuichi Buma, Inventor. (Published January 8, 2009).

e. International Application No.: PCT/SE2001/000118. ECCENTRIC GEAR; Ulf Rilbe, Inventor. (Published August 30, 2001).

f. SOLAR ARRAY DRIVE MECHANISM; NEC Toshiba Space Systems, Ltd. Product Specification. Updated February 2008.

These documents have been distributed in the United States and are readily available to Harmonic Drive's customers and business partners.

8. Attached as Exhibit 3 is a purchase order from a customer for a servo actuator showing use of HARMONIC DRIVE as a trademark and "servo actuator" as the type of product.

9. I declare under penalty of perjury that the foregoing is true and correct, to the best of my knowledge, information and belief.

By: Zhongmin Yang

Name: Zhongmin Yang

Title: Executive Vice President

Date: March 2, 2010

EXHIBIT 1

HARMONIC DRIVE™

POWER TRANSMISSION PRODUCTS

For Precise Motion Control and High Accuracy Positioning

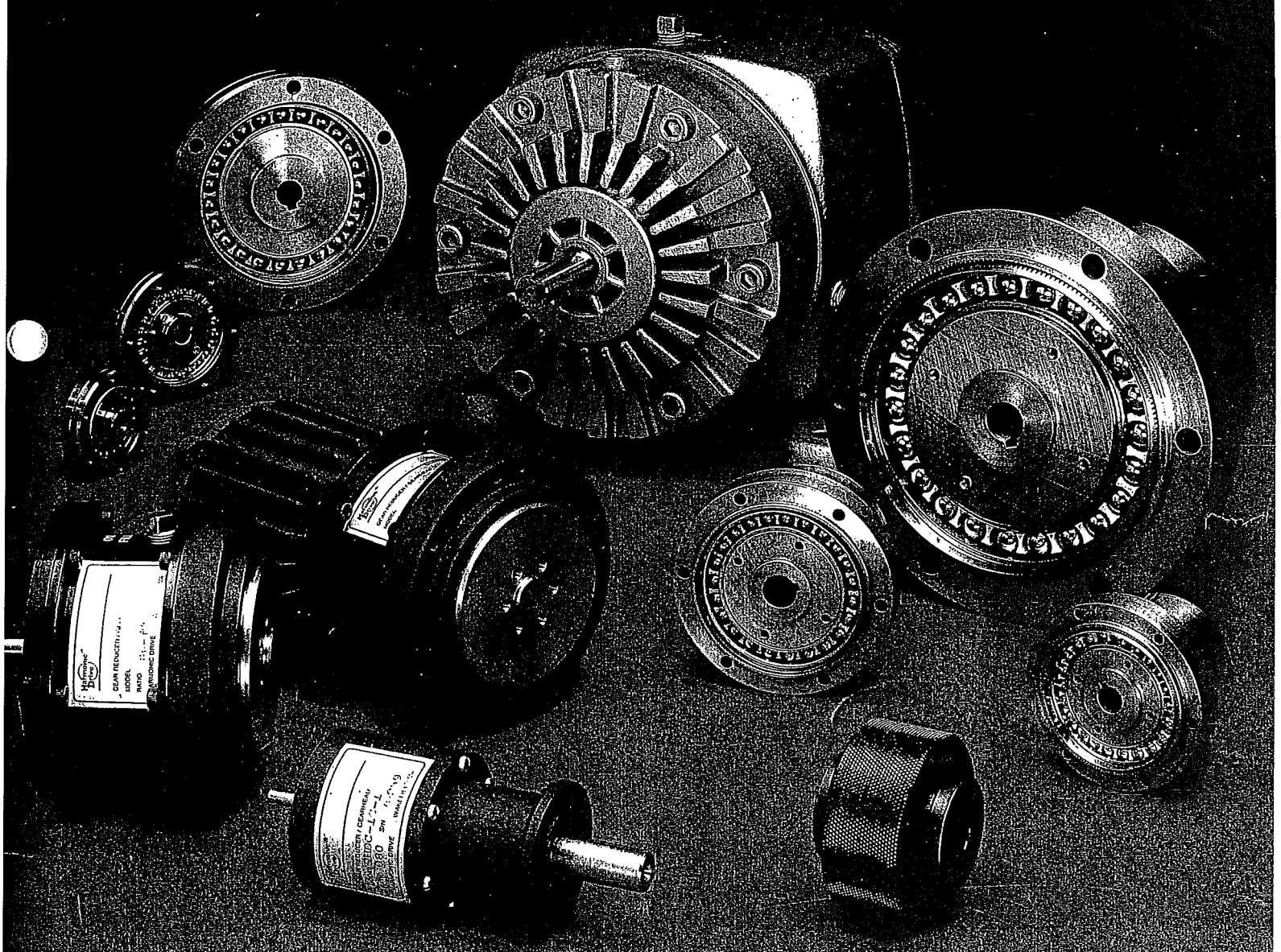

Harmonic Drive

HD 0001

HARMONIC DRIVE, the Original Manufacturer of Strain Wave Gearing

Harmonic Drive, A Division of Quincy Technologies, Inc., is the original manufacturer of strain wave gearing.

Strain wave gearing was developed over 25 years ago and has been an invaluable element where controlled motion and/or accurate positioning has been necessary. Originally, the gearing was primarily used in aerospace applications where performance and reliability were required and where space and weight savings were of paramount importance.

Harmonic Drive™ strain wave gearing has since become popular for precision control applications because of its high torque capacity, zero backlash and high, single-stage ratios. Beyond this, it has gained wide acceptance by designers because of its compact, in-line configuration which makes it easy to incorporate into a variety of applications including machine tool drive mechanisms, valve actuators, web tensioning differential drives, servo actuator transmissions for robots, positioning drives for medical x-ray and diagnostic equipment, antenna positioners, photo typesetters, computer peripherals and a long and varied list of other applications.

Harmonic Drive is a trademark of Quincy Technologies, Inc.

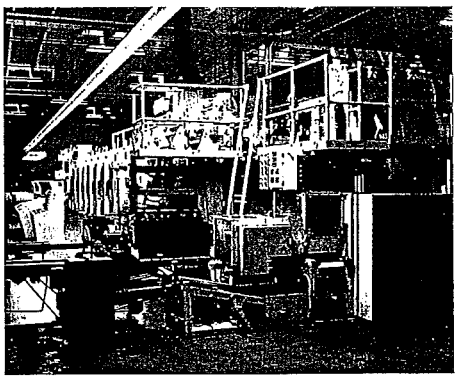

Continuous Duty/No Downtime — when it has to stand up.

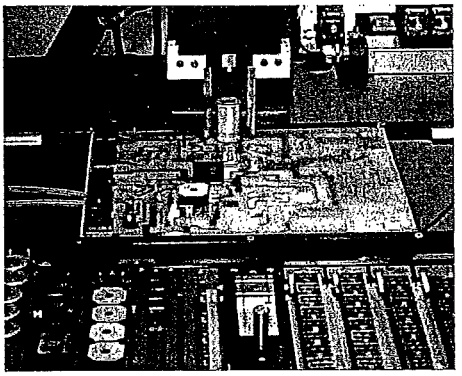

Compactness — when it has to fit into a small space.

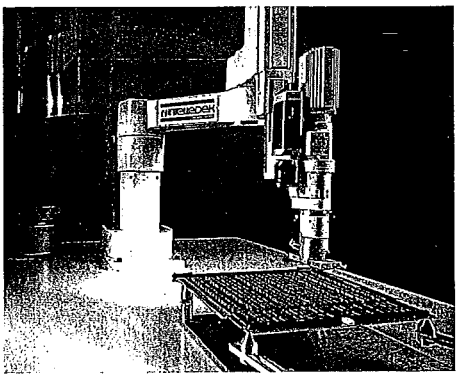

Precision and Repeatability — when it has to drive precisely.

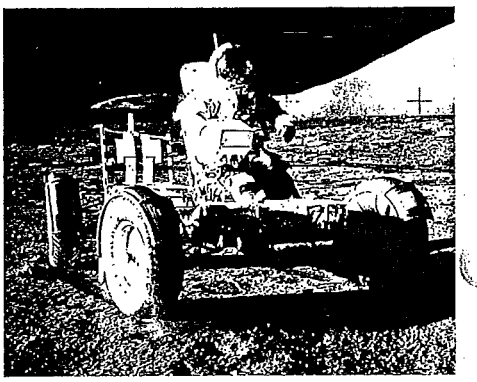

High Reliability — when it has to work.

© 1988 Harmonic Drive

Standard Products

Cup-Type Component Gear Sets

High torque and precisely controlled positioning in gearing that can be integrated right into machine designs.

Pancake Component Gear Sets

The most compact high ratio gearing available for integration into equipment design.

Precision Compact Reducers

Fully housed directly mountable gearheads. All the advantages of Cup-Type gear sets packaged for simple, easy application.

Precision Servo Reducers

Extremely compact high ratio gearing in fully housed units.

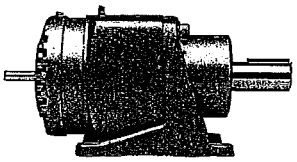

Industrial Speed Reducers

Heavy duty high ratio speed reducers and positioning drives for use in industrial environments.

Phase Adjusting Couplings

Fine tuning control for static angular phase adjustment of rotating machine elements.

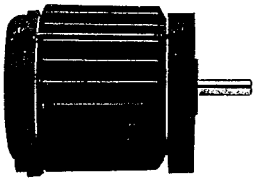

Responsyn® Hybrid Stepping Motors

High resolution positioning with fast damping and minimum time to absolute position.

The Advantages of Strain Wave Gearing

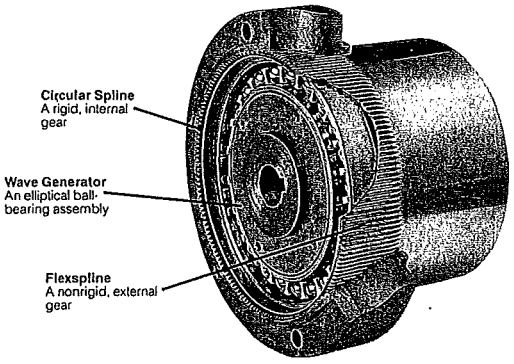

CUP-TYPE COMPONENT GEAR SET

Because strain wave gearing consists of only three simple parts and requires relatively small space, it offers the design engineer extremely wide latitude including the freedom to integrate drives within other components of the equipment itself using relatively simple support structure.

Harmonic Drive's precision performance characteristics are ideal where accurate positioning or precise motion control is required.

Zero Backlash

Natural gear preload and almost pure radial tooth engagement allow standard strain wave gearing to operate with essentially zero backlash.

Efficiencies as High as 90%

Efficiencies measured on actual shaft-to-shaft losses rather than tooth losses, as in other gearing, are normally in the 90% range with standard Harmonic Drive strain wave gearing.

Simple Support Requirements

Since torque is transmitted by pure couple, strain wave gearing does not generate radial loads and, therefore, requires much simpler bearings and supporting structure than other forms of gearing.

High Single-Stage Ratios From 60:1 Up

With in-line input and output, single-stage ratios go as high as 320:1. By using compound drives, much higher ratios can also be achieved.

Torque Equal to Drives Twice as Large

Pound for pound, no other mechanical power transmission can compare with Harmonic Drive strain wave gearing. Extremely small size makes it easy to integrate into designs.

Excellent Positional Accuracy and Repeatability

The effect of tooth-to-tooth error is minimized with strain wave gearing, since about 10% of the total teeth are always in engagement. Accuracy is in the arc minute range, and repeatability is in the arc second range.

Concentric Shafting

Ideal for differential designs.

Radial Gear Mesh

Unaffected by repeated impact of stepping motors or frequent starts, stops and reversals.

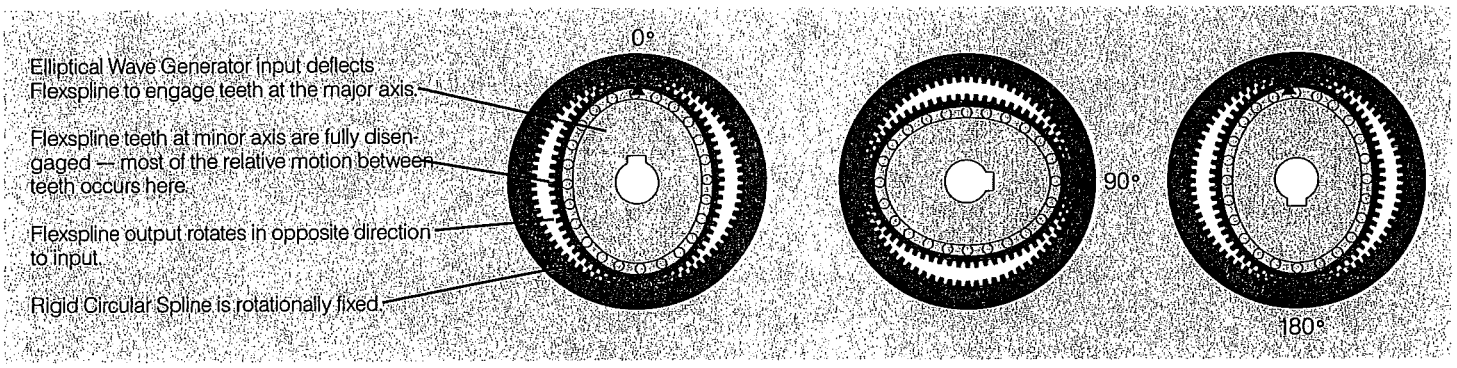

Note: The amount of Flexspline deflection has been exaggerated in the diagrams in order to demonstrate the principle. Actual deflection is much smaller than shown and is well within the material fatigue limits. **Deflection is, therefore, not a factor in the life expectancy of the gearing.**

Principle of Operation

The teeth on the nonrigid Flexspline and the rigid Circular Spline are in continuous engagement and since the Flexspline has two teeth fewer than the Circular Spline, one revolution of the input causes relative motion between the Flexspline and the Circular Spline equal to two teeth. Thus, with the Circular Spline rotationally fixed, the Flexspline will rotate in the opposite direction to the input at a reduction ratio equal to the number of teeth on the Flexspline divided by two.

This relative rotation may be seen by examining the motion of a single Flexspline tooth over one-half an input revolution.

The tooth is fully engaged when the major axis of the Wave Generator input is at zero degrees. When the Wave Generator's major axis rotates to 90 degrees, the tooth is disengaged. Full reengagement occurs in the adjacent Circular Spline tooth space when the major axis is rotated to 180 degrees. This motion repeats as the major axis rotates

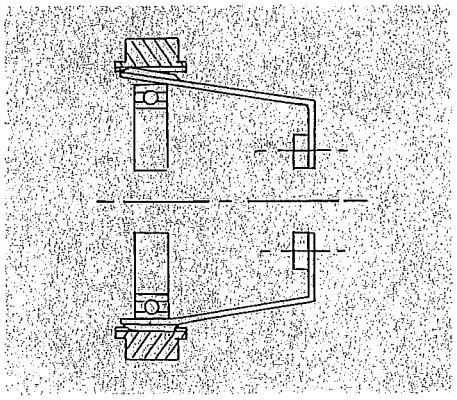

another 180 degrees back to zero, thereby producing the two tooth advancement per input revolution.

All tabulated Harmonic Drive gear reduction ratios assume the Flexspline is the output member with the Circular Spline rotationally fixed. However, any of the drive elements may function as the input, output or fixed member.

Natural Preload Provides Zero Backlash

Deflection of the round, free-state cup Flexspline into an elliptoidal shape at its open end results in nonparallel gear teeth along the major axis. This suggests that the teeth only engage at the outer ends as shown in the exaggerated upper view of the illustration. However, in the actual assembly, the teeth are deflected slightly toward parallel with the Circular Spline as shown exaggerated in the lower view. This natural preload condition results in zero backlash.

Because of the almost pure radial engage/disengage motion of the teeth with little sliding, there is minimum tooth wear and little deterioration of the preload.

NOTE: Zero backlash is available in the cup-type (HDC) configuration only.

Input/Output Versatility

1. Speed Reducer: Circular Spline stationary. Wave Generator input. Flexspline output.	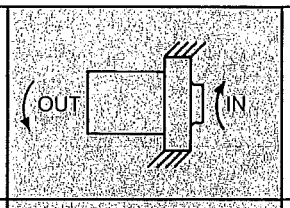	**4. Speed Increaser:** Flexspline stationary. Circular Spline input. Wave Generator output. Ratio as tabulated plus 1.	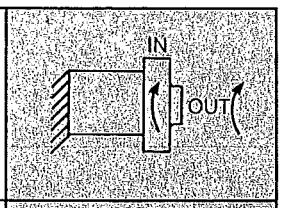
2. Speed Increaser: Circular Spline stationary. Flexspline input. Wave Generator output. Ratio as tabulated.	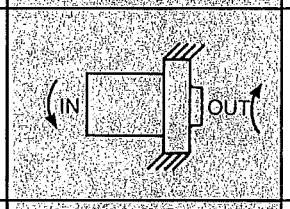	**5. Speed Reducer/Differential:** Wave Generator stationary. Flexspline input. Circular spline output. Ratio = $\frac{\text{Tabulated Ratio}+1}{\text{Tabulated Ratio}}$	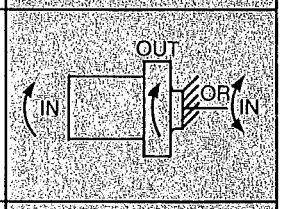
3. Speed Reducer: Flexspline stationary. Wave Generator input. Circular Spline output. Ratio as tabulated plus 1.	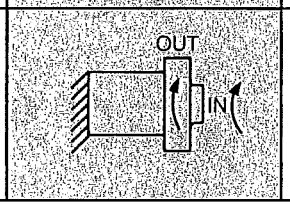	**6. Speed Increaser/Differential:** Wave Generator stationary. Circular Spline input. Flexspline output. Ratio = $\frac{\text{Tabulated Ratio}}{\text{Tabulated Ratio}+1}$	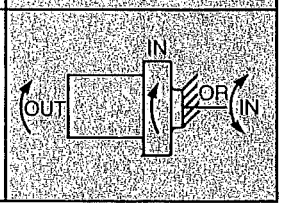

Dimensions (inches) Cup-Type Model HDC

		10	1C	3C	5C	1M	2M	4M	8M	15M
A	Circular Spline OD	1.48	2.00	2.62	3.28	4.25	5.25	6.62	8.62	10.62
B	overall length	1.05	1.41	1.88	2.30	2.96	3.64	4.45	5.79	7.19
C	Circular Spline width	.28	.38	.50	.62	.81	1.00	1.09	1.44	1.88
D	no. of holes	4	6	6	6	6	6	6	6	8
E	hub ID	.188	.250	.375	.500	.500	.625	.625	.875	1.125
F	Flexspline pilot diam.	.313	.437	.625	.781	1.063	1.281	1.625	2.094	2.563
G	no. of holes	—	6	6	6	6	6	6	6	6
H	clamp ring OD	.56	.83	1.25	1.55	2.02	2.48	3.09	4.03	4.97
	weight–lb (complete set)	.17	.3	.62	1.2	2.6	5.1	9.0	20.3	38.6

NOTE: Required specification prints furnished on request. It is recommended that our engineering staff be given the opportunity to review application approaches since the full extent of design options is more than can be conveniently described in this brochure.

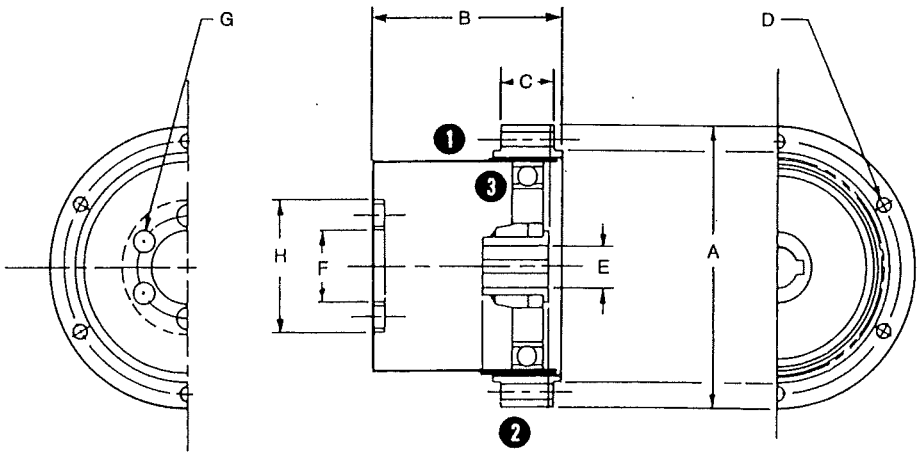

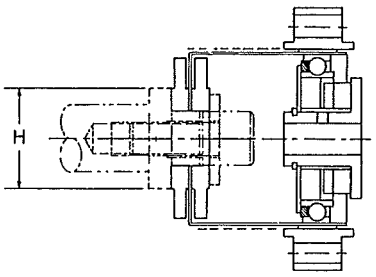

HD 0005

❶ FLEXSPLINE ❷ CIRCULAR SPLINE ❸ WAVE GENERATOR

HDC 3C — 15M

HDC 10

Cup-Type Components, Reducers, and Gearheads

Rating Table (lb.-in.) Based on 5000 hours B10 life (25,000 hours average life)

Size	P.D. Inches	Ratio***	INPUT 3500 RPM			INPUT 1750 RPM			INPUT 1150 RPM			INPUT 500 RPM		
			Input HP	Output Speed	Output Torque	Input HP	Output Speed	Output Torque	Input HP	Output Speed	Output Torque	Output Speed	Output Torque	Maximum Torque**
10	1.0	**60**	.02	58.3	21	.01	29.2	27	.01	19.2	30	8.3	30	30
		80	.02	43.8	22	.01	21.9	28	.01	14.4	32	6.3	40	40
1C	1.4	**60**	.06	58.3	68	.04	29.2	86	.03	19.2	95	8.3	110	119
		72	.06	48.6	68	.04	24.3	86	.03	16.0	95	6.9	110	119
		80	.06	43.8	68	.03	21.9	86	.02	14.4	95	6.3	110	140
		100	.05	35.0	68	.03	17.5	86	.01	11.5	95	5.0	110	180
3C	2.0	**60**	.22	58.3	240	.15	29.2	300	.10	19.2	300	8.3	300	300
		80	.20	43.8	240	.12	21.9	300	.08	14.4	300	8.3	300	300
		100	.16	35.0	240	.11	17.5	315	.07	11.5	350	5.0	450	410
		120	.14	29.2	240	.09	14.6	315	.07	9.6	350	4.2	430	480
		140	.12	25.0	240	.08	12.5	315	.06	8.2	350	3.6	430	590
		160	.11	21.9	240	.07	10.9	315	.05	7.2	350	3.1	430	660
5C	2.5	**60**	.38	58.3	410	.27	29.2	525	.19	19.2	570	8.3	570	570
		80	.34	43.8	410	.21	21.9	525	.15	14.4	570	6.3	570	570
		100	.28	35.0	410	.18	17.5	525	.14	11.5	600	5.0	710	770
		120	.24	29.2	410	.16	14.6	525	.12	9.5	600	4.2	800	990
		140	.21	25.0	410	.14	12.5	525	.10	8.2	600	3.6	800	1,130
		160	.19	21.9	410	.12	10.9	525	.09	7.2	600	3.1	800	1,240
		180	.18	19.4	410	.11	9.7	525	.08	6.4	600	2.8	800	1,360
		200	.16	17.5	410	.10	8.8	525	.06	5.8	600	2.5	800	1,440
1M	3.2	**60**	.77	58.3	835	.54	29.2	1,050	.38	19.2	1,125	8.3	1,125	1,125
		80	.70	43.8	835	.41	21.0	1,050	.29	14.4	1,125	6.3	1,125	1,125
		100	.57	35.0	835	.36	17.5	1,050	.27	11.5	1,200	5.0	1,530	1,530
		120	.50	29.2	835	.31	14.6	1,050	.23	9.6	1,200	4.2	1,600	1,890
		140	.44	25.0	835	.27	12.5	1,050	.21	8.2	1,200	3.6	1,600	2,200
		160	.39	21.9	835	.24	10.9	1,050	.18	7.2	1,200	3.1	1,600	2,470
		180	.36	19.4	835	.22	9.7	1,050	.17	6.4	1,200	2.8	1,600	2,690
		200	.33	17.5	835	.21	8.8	1,050	.16	5.8	1,200	2.5	1,600	2,890
2M	4.0	**60**	1.62	58.3	1,750	.90	29.2	1,750	.59	19.2	1,750	8.3	1,750	1,750
		80	1.38	43.8	1,750	.85	21.0	1,750	.45	14.4	1,750	6.3	1,750	1,750
		100	1.23	35.0	1,800	.75	17.5	2,200	.52	11.5	2,430	5.0	2,430	2,430
		120	1.07	29.2	1,800	.65	14.6	2,200	.49	9.6	2,500	4.2	2,900	2,900
		140	.94	25.0	1,800	.57	12.5	2,200	.43	8.2	2,500	3.6	3,400	3,500
		160	.84	21.9	1,800	.51	10.9	2,200	.38	7.2	2,500	3.1	3,400	3,940
		180	.77	19.4	1,800	.47	9.7	2,200	.35	6.4	2,500	2.8	3,400	4,280
		200	.71	17.5	1,800	.44	8.8	2,200	.33	5.8	2,500	2.5	3,400	4,630
4M	5.0	**60**	3.03	58.3	3,280	1.69	29.2	3,280	1.11	19.2	3,280	8.3	3,280	3,280
		80	2.59	43.8	3,280	1.34	21.9	3,280	.85	14.4	3,280	6.3	3,280	3,280
		100	2.26	35.0	3,300	1.29	17.5	4,100	.93	11.5	4,370	5.0	4,370	4,370
		120	1.96	29.2	3,300	1.21	14.6	4,100	.92	9.6	4,700	4.2	5,500	5,500
		140	1.72	25.0	3,300	1.07	12.5	4,100	.80	8.2	4,700	3.6	6,300	6,460
		160	1.55	21.9	3,300	.96	10.9	4,100	.72	7.2	4,700	3.1	6,300	7,250
		180	1.41	19.4	3,300	.88	9.7	4,100	.66	6.4	4,700	2.8	6,300	7,850
		200	1.31	17.5	3,300	.82	8.8	4,100	.62	5.8	4,700	2.5	6,300	8,530
8M	6.5	**60**	5.55	58.3	6,000	3.42	29.2	6,650	2.25	19.2	6,650	8.3	6,650	6,650
		80	4.74	43.8	6,000	2.63	21.9	6,650	1.73	14.4	6,650	6.3	6,650	6,650
		100	4.11	35.0	6,000*	2.54	17.5	7,600	1.96	11.5	8,700	5.0	9,280	9,280
		120	3.56	29.2	6,000*	2.26	14.6	7,600	1.70	9.6	8,700	4.2	11,200	11,200
		140	3.13	25.0	6,000*	1.98	12.5	7,600	1.50	8.2	8,700	3.6	11,700	13,200
		160	2.82	21.9	6,000*	1.78	10.9	7,600	1.34	7.2	8,700	3.1	11,700	14,800
		180	2.57	19.4	6,000*	1.62	9.7	7,600	1.23	6.4	8,700	2.8	11,700	16,200
		200	2.38	17.5	6,000*	1.52	8.8	7,600	1.14	5.8	8,700	2.5	11,700	17,600
15M	8.0	**60**				5.96	29.2	11,570	3.92	19.2	11,570	8.3	11,570	11,570
		80				4.57	21.9	11,570	3.00	14.4	11,570	6.3	11,570	11,570
		100				5.14	17.5	15,000	3.41	11.5	16,000	5.0	16,000	16,000
		120				4.45	14.6	15,000	3.42	9.6	17,500	4.2	20,000	20,000
		140				3.91	12.5	15,000	2.99	8.2	17,500	3.6	23,000	23,600
		160				3.51	10.9	15,000	2.70	7.2	17,500	3.1	23,000	27,000
		180				3.21	9.7	15,000	2.47	6.4	17,500	2.8	23,000	29,500
		200				2.99	8.8	15,000	2.30	5.8	17,500	2.5	23,000	31,700

***Thermal Limited — 60% duty cycle recommended with on time not exceeding 30 minutes. Ratings are based on AGMA Service Factor of 1.**

****Repetitive momentary or continuous running load not to exceed Maximum Output Torque Rating. See Dynamic Torque Limit - Page 8.**

*****Bold Face signifies standard ratios.**

HD 0006

Efficiencies

% Efficiency vs. Output Torque

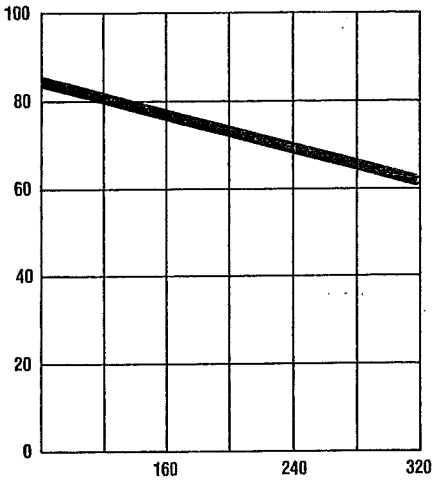

Ratio
@ Rated Torque & 1750 RPM

% Efficiency vs. Input Speed

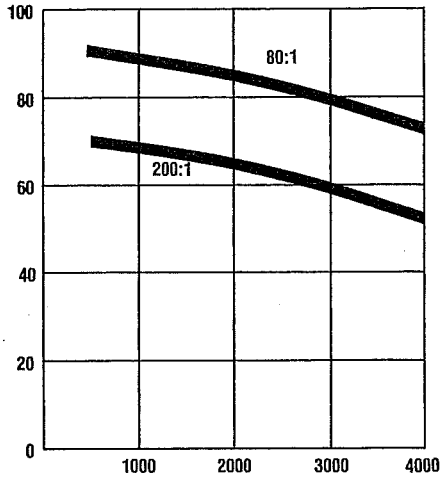

Input Speed
@ Rated Output Torque

% Efficiency vs. Output Torque

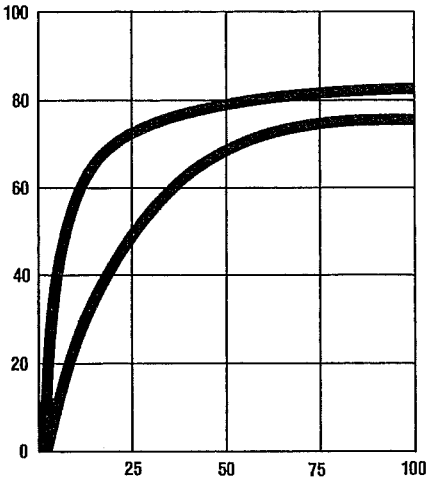

Output Torque
Percent of Rated @ 1750 RPM 100:1 Ratio

Operating Characteristics

Backlash

Standard cup-type Harmonic Drive gearing units are supplied with zero backlash in the gear mesh. The oldham coupling at the input will introduce a minor amount of lash which, when measured at the output, becomes negligible since the lash is divided by the ratio. Even this small amount of backlash can be eliminated entirely by direct coupling the motor to the wave generator. Direct coupling is not recommended, however, unless adequate provisions have been made for runout and alignment.

Spring Rate

Spring windup in the low torque region is shown in the torque deflection graph. Values for typical spring rates of standard units are given for the various sizes in the accompanying chart. These values can be guaranteed as a minimum by specifying the K option (formerly BL) which ensures that each unit will be tested to meet them. (See Ordering Data, Page 20.)

The maximum values shown are the practical spring rate upper limits. Values up to these maximums can be ordered on a custom basis. Some increase in no-load starting torque will be experienced depending on the extent of improvement. Consult the factory for details.

NOTE: Even standard spring rate values compare favorably to other power transmission forms in similar ratio ranges to those of Harmonic Drive strain wave gearing.

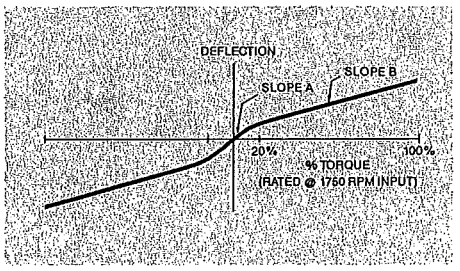

Typical Torsional Spring Rate (lb.-in./radian) and Inertias

HDC Size	Pitch Dia. (P.D.)	Slope A: Optimized (Max)**	Slope A: Guaranteed Minimum (K)*	Slope B	Standard Wave Generator Input Inertia (lb. in.^{2})
10	1.0	5,000	2,900	12,000	.003
1C	1.4	15,000	8,000	40,000	.011
3C	2.0	48,000	23,000	120,000	.058
5C	2.5	110,000	45,000	234,000	.165
1M	3.2	250,000	92,000	515,000	.61
2M	4.0	480,000	184,000	960,000	1.75
4M	5.0	900,000	345,000	1.88×10^6	5.06
8M	6.5	2×10^6	792,000	4.12×10^6	19.6
15M	8.0	3.8×10^6	1.47×10^6	7.68×10^6	51.5

*Units are specially fit and tested to meet these values, although standard units will typically be in this range.
**These are practical maximum values available only on a custom basis.

Inertia

Standard wave generator inertia values are shown in the table at left. Units can also be supplied on a custom basis with reduced input inertia.

Typical reduced values are not shown, since the extent of improvement is dependent on a number of variables which require evaluation of each application.

Accuracies

Positional Accuracy

Positional accuracy is defined as the difference between the theoretical and actual angular position or error between the input and output position. The typical error characteristic is shown in the graph at right. The maximum amplitude of the error varies inversely with the pitch diameter of the unit at a predominant frequency of twice the input speed. Additionally, an amplitude modulation typically occurs twice per output revolution.

The error can be reduced by a factor of approximately two over the quoted value on a custom basis.

Maximum Positional Error

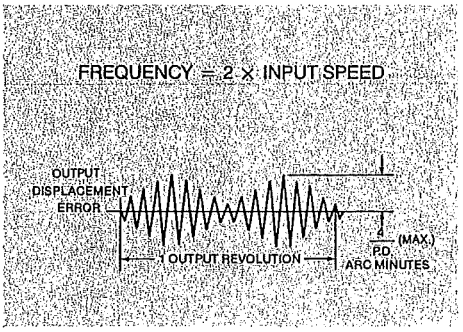

Velocity Accuracy

Velocity accuracy is largely dependent on the time-displacement increment over which the measurement is taken and also varies directly with the pitch diameter and gear ratio. The average variation typically will approach extremely small values.

The factory should be consulted for further information as required.

Limits

Static Torque Limit

The static torque limit is the maximum allowable torque that can be applied to the output in a back drive mode with the input Wave Generator locked. Static torque limit varies with the pitch diameter or size of the unit and the gear ratio, in a range from 1.5 to 3.5 times the listed maximum output torque.

Dynamic Torque Limit (Max. Output)

The dynamic torque limit is the maximum allowable output torque that can be continuously developed with dynamic torque applied through the input. This is also the "Maximum Output Torque" which is tabulated in the Harmonic Drive rating table on Page 6. Torques above these values (up to the ultimate torque limit) will significantly increase the risk of failure from fatigue.

Ultimate Torque Limit

The ultimate torque limit is the maximum output torque that will be reacted by the drive under dynamic overload conditions. The normal industry definition suggests that it is the one time load application at which drive failure can be expected.

This is not the case with Harmonic Drive strain wave gearing, due to a momentary load release phenomenon which typically occurs prior to failure.

"Ratcheting," or slippage of the Flexspline/Circular Spline gear mesh, is essentially the result of excessive radial deflection of the elements of the drive caused by a torque induced tooth separating load.

The absolute ratchet torque point is variable and difficult to predict with any degree of accuracy. Nevertheless, a typical minimum value for properly mounted units is in the order of 3 x the tabulated torque rating @ 1750 RPM input. **Caution:** In no event shall this characteristic be intentionally utilized for machine overload protection purposes. The ratchet point will decrease with each subsequent incident. Repeated ratcheting will lead to ultimate drive failure.

No-Load Starting Torque (Typical) & Maximum Input RPM

HDC Size	10	1C	3C	5C	1M	2M	4M	8M	15M
NL Input Starting Torque (oz-in)	.6	1	2.5	5	11	20	40	88	160
*Max. Input RPM	15,000	12,000	11,200	9000	7000	5600	4500	3500	2800

*For intermittent operation only. Consult factory prior to using.

Operation

Operating Life

The life expectancy of Harmonic Drive strain wave gearing is predicated on the ball bearing on the input Wave Generator element of the drive. Gear tooth wear is typically well in excess of bearing life. Since the bearing life governs, the Harmonic Drive catalog load ratings for various input speeds between 3600 and 500 RPM are published at a constant bearing B10 life of approximately 5000 hours (average life 25,000 hours).

Units operated at loads between the rating given at 500 RPM and the max. output torque on Page 6, are subject to a reduced life. Life expectancy for these and other speed/torque conditions not given in the rating table is derived by the relationship shown below.

$$\text{B-10 life} = 5000 \left[\frac{1750}{N}\right] \left[\frac{\text{catalog torque rating at 160:1 ratio and 1750 RPM}}{T}\right]^3 \text{hrs.}$$

Reversibility

Harmonic Drive cup-type units are reversible and function equally as well whether speed decreasing or increasing. The units cannot reliably be depended on to hold a load in position unless an appropriate external static load is connected to the Wave Generator.

Compact and Subcompact Gearheads and Speed Reducers

Compact

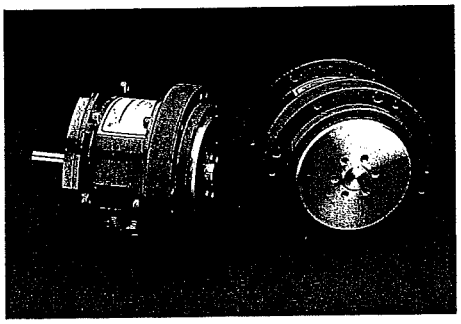

High Torques in Half the Space

PCR Series precision speed reducers provide 50 to 200 times the torque of your servomotor or stepper* with high accuracy in minimum space. The compact, in-line design provides low to zero backlash with accuracies to within a few arc minutes. The heart of the PCR is Harmonic Drive's advanced strain wave gearing, for more than 25 years the industry's most adaptable and precise gearing systems.

*Unaffected by stepping impact.

NOMINAL RATING @ 1750 RPM Input

	Output Torque
PCR 3C	300 lb-in
PCR 5C	525 lb-in
PCR 1M	1050 lb-in

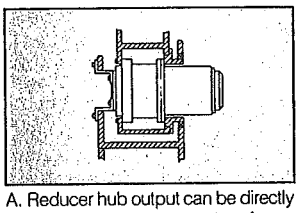

A. Reducer hub output can be directly mounted to output structure for maximum space efficiency and stiffness.

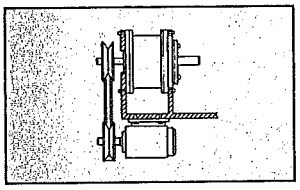

B. Input and/or output can be attached to a shaft, belt, gear, or pulley for application versatility.

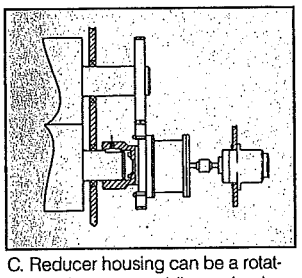

C. Reducer housing can be a rotating element, providing a simple method for creating differentials.

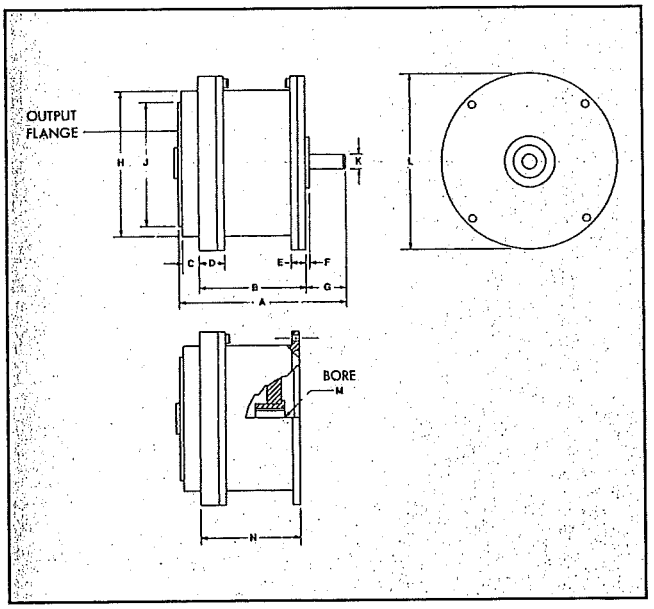

DIMENSIONS (inches) For reference only. Detailed prints furnished upon request.

PCR	A	B	C	D	E	F	G	H	J	K	L	M	N
PCR 3C	4.3	2.4	.25	.7	.4	.25	1.5	3.2	2.7	.37	4.0	.37	2.2
PCR 5C	4.6	2.8	.44	.8	.44	.2	1.3	3.8	3.1	.5	4.7	.5	2.5
PCR 1M	5.9	3.7	.6	.9	.5	.2	1.9	5.0	4.3	.5	6.0	.5	3.5

Subcompact

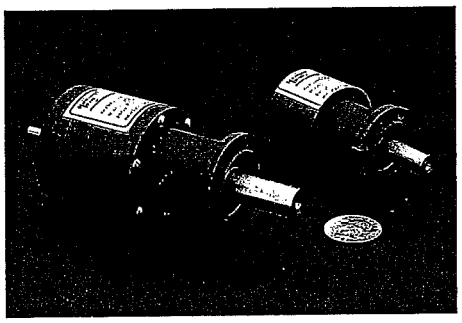

Torque and Precision in Minimum Space

Now small servo- and stepper- motors* can get the torque necessary to do big jobs in small spaces while maintaining accuracies in the range of a few arc minutes.

PSR Series in-line drive precision miniature speed reducers provide high ratios and low to zero backlash.

*Unaffected by stepping impact.

NOMINAL RATING @ 1750 RPM Input

	Output Torque
PSR 10	27 lb-in
PSR 1C	86 lb-in

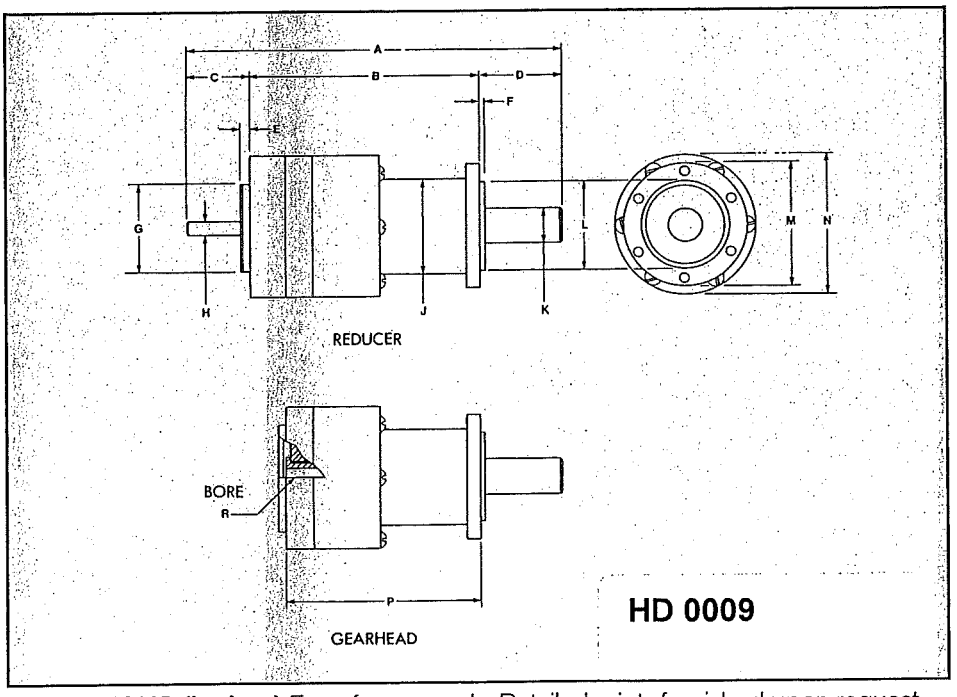

DIMENSIONS (inches) For reference only. Detailed prints furnished upon request.

PSR	A	B	C	D	E	F	G	H	J	K	L	M	N	P	R
PSR 10	4.2	2.7	.6	.9	.06	.06	1.0	.18	1.0	.37	1.0	1.5	1.5	2.2	.18
PSR 1C	5.3	3.2	.9	1.2	.13	.06	1.3	.18	1.3	.50	1.3	1.8	2.0	2.7	.25

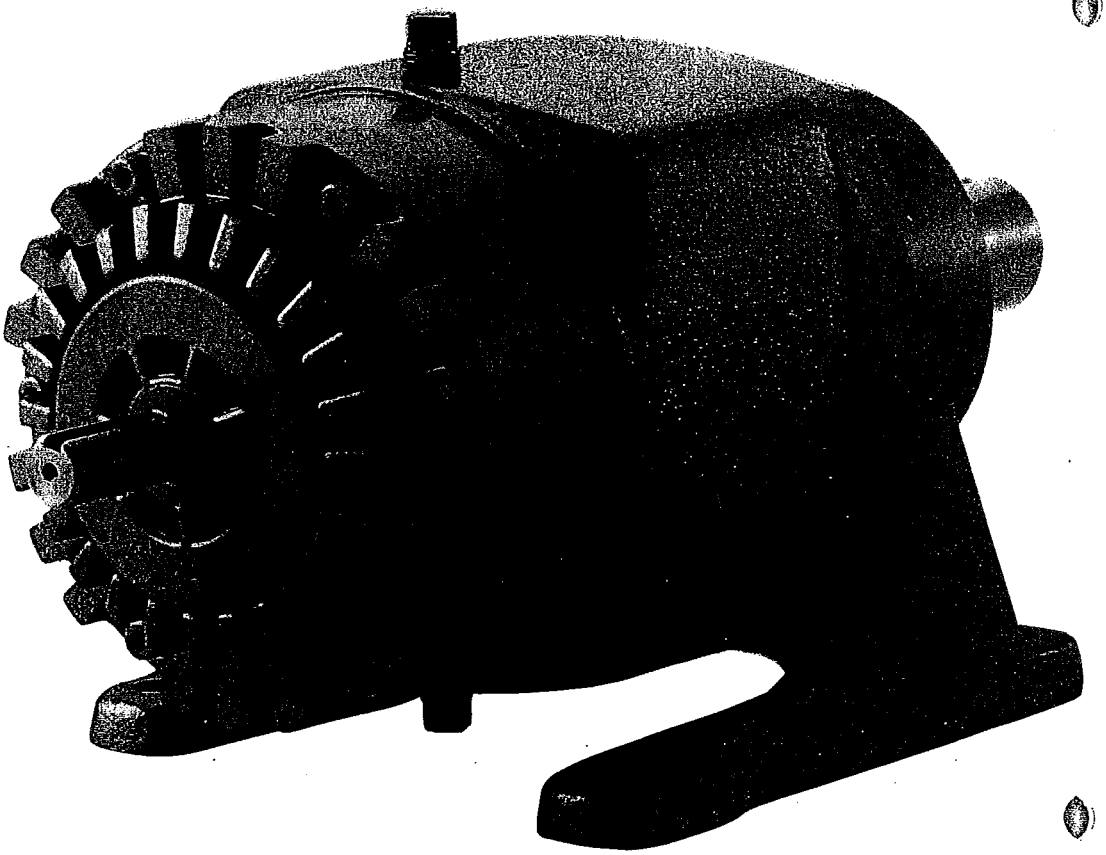

The Harmonic Drive ISR Series speed reducer is a proven power transmission that can be expected to provide thousands of service-free operating hours when properly lubricated and operated within the specified ratings. Workmanship and material is warranted for one year from date of delivery; however, the average life under rated conditions is expected to be at least 25,000 hours. Reducer Service Manual, Parts List and Installation Drawings available on request.

Standard (–0)

The Harmonic Drive speed reducer is furnished foot mounted for horizontal mounting. The foot is detachable, thereby converting the unit to face mounting by using the same four screws.

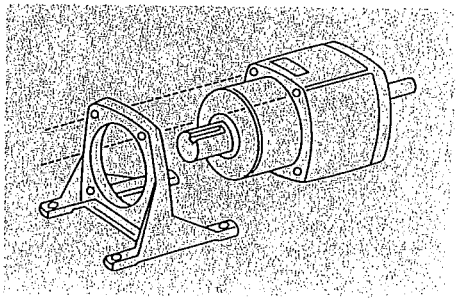

Close Couple Gearhead (–cc)

Close couple reducers are identical to standard units except that the end cover and input shaft are removed. Close couple reducers are used where space restrictions require a motor/gearhead configuration. The motor frame is connected to the reducer housing through an adapter plate normally furnished by the user. The motor shaft connects directly to the input shaft of the reducer.

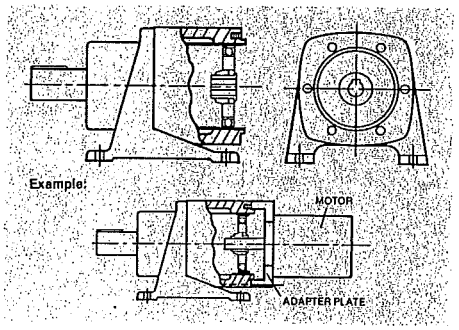

HD 0010

Dimensions (inches)

ISR SIZE		3C	5C	1M	2M	4M	8M
ENVELOPE							
A	length, overall	7.69	9.06	10.94	13.19	15.81	18.69
B	length, body	4.94	5.88	7.56	9.12	10.69	13.00
C	body width/height	2.69	3.38	4.38	5.38	6.75	8.75
D	height, w/foot	3.22	3.88	5.19	6.19	7.50	9.62
G	width, foot	3.88	4.44	5.56	6.56	8.12	10.31
H	height, centerline	1.88	2.19	3.00	3.50	4.12	5.25
FOOT MOUNTING							
J	hole to hole	2.75	3.31	4.31	5.31	6.69	8.62
K	hole diameter	.28	.28	.34	.41	.41	.53
L	face to face	1.81	2.25	3.13	3.31	3.75	4.38
M	hole to hole	2.81	3.38	4.94	5.88	6.94	9.31
N	foot length	3.94	4.50	6.19	7.12	8.38	10.94
O	foot thickness	.44	.44	.50	.56	.62	.75
P	hole to face	1.19	1.66	2.25	2.53	3.03	3.31
MOUNTING-NO FOOT							
Q	thread (NC)	#10-24	¼-20	⅜-16	7/16-14	½-13	¾-10
R	thread depth	.31	.50	.75	.75	.75	1.31
S	bolt circle diameter	2.75	3.44	4.44	5.50	6.88	8.88
T	pilot diameter	2.25	2.50	3.50	4.00	4.75	5.50
INPUT SHAFT							
U_1	diameter	.375	.500	.500	.625	.625	.875
V_1	length	1.12	1.25	1.25	1.44	1.75	2.19
X_1	keyway	FLAT	FLAT	FLAT	.19 × .09	.19 × .09	.19 × .09
	overhung load rating (lb.)	60	150	160	215	220	250
	starting torque lb.-in. (approx.)	0.6	0.9	1.3	2.0	3.5	7.0
OUTPUT SHAFT							
U_0	diameter	.625	.875	1.125	1.375	1.750	2.125
V_0	length	1.62	1.95	2.12	2.65	3.38	3.50
X_0	key	.19 sq.	.19 sq.	.25 sq.	.31 sq.	.38 sq.	.50 sq.
	overhung load rating (lb.)	290	930	2100	2500	3600	4800
WEIGHT							
	unit (lbs.)	6.0	10.0	20.5	32.5	61.0	112.0

See Cup-Type Rating Table (Page 6) for complete listing of available ratios and torque ratings.

NOTE: Catalog dimensions are for reference only and suitable for general layout purposes. Detailed specifications on dated prints will be furnished on request. Harmonic Drive reserves the right to change designs and specifications without prior notice.

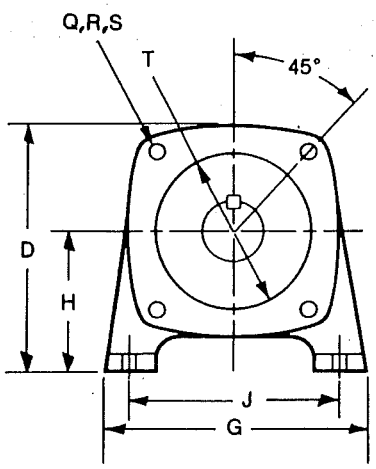

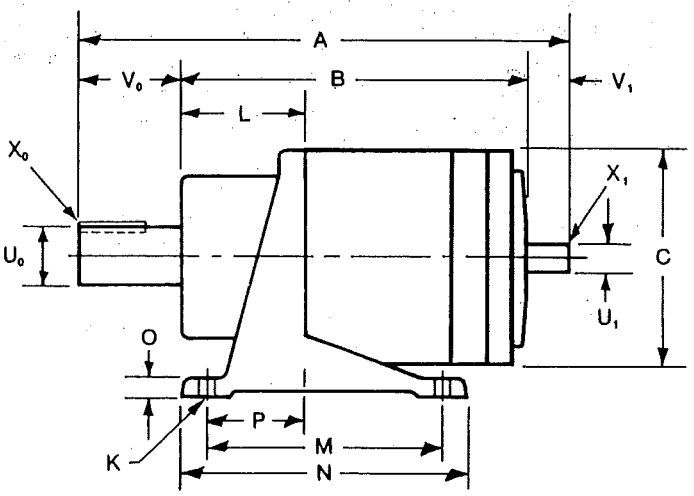

HD 0011

HARMONIC DRIVE
PANCAKE COMPONENT GEAR SETS

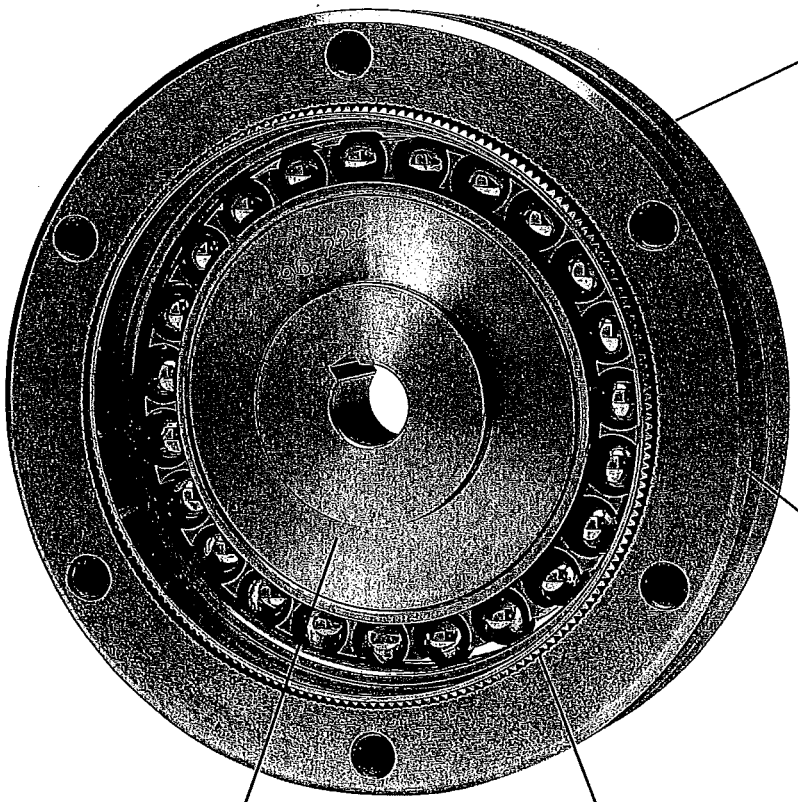

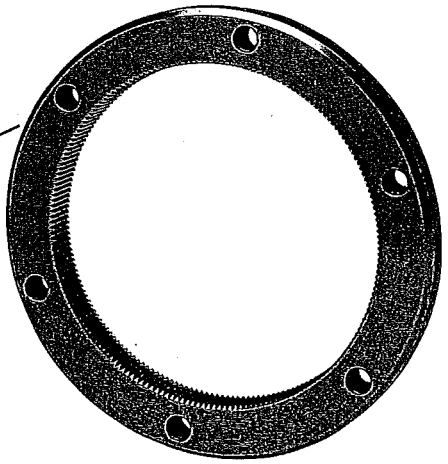

DYNAMIC SPLINE: An internal gear that rotates at the same speed and in the same direction as the Flexspline. It is the output element to which an output shaft is connected. It has the same number of teeth as the Flexspline.

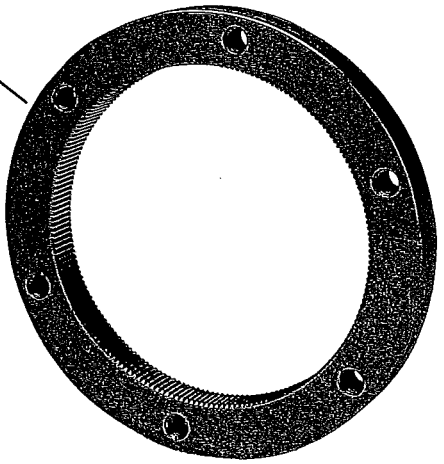

CIRCULAR SPLINE: A fixed non-rotating internal gear which provides mechanical grounding for the transmission. It has two more teeth than the Flexspline to establish the positive transmission reduction ratio equal to ½ the number of Flexspline teeth.

WAVE GENERATOR: An elliptical bearing and the rotating input element of the transmission. It is connected to a motor or other input shaft, and it imparts a rotating elliptical shape to the Flexspline.

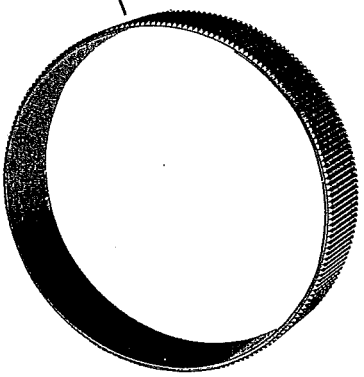

FLEXSPLINE: A thin-wall steel ring with external spline teeth that progressively engage the internal teeth of the Circular Spline and Dynamic Spline on the major axis of its rotating elliptical shape. The Flexspline rotates in the opposite direction to the Wave Generator. Its speed reduction relative to the Wave Generator is equal to ½ the number of teeth on its O.D., i.e., 200 teeth Flexspline = 100:1 reduction ratio.

HD 0012

Harmonic Drive pancake gearing offers in-line power transmission in standard sizes and reduction ratios comparable to the HDC model but features extreme axial compactness. A further advantage is an ultrahigh reduction ratio capability of up to 40,000:1 (subject to application review prior to ordering).

The HDF is recommended for light-duty speed reduction and phasing differential applications. Other pancake models are available for heavier duty applications.

Caution: Pancake gearing is not intended as a direct replacement for the precision cup-type models due to lower performance ratings and the presence of pure backlash.

Pancake gearing operating principles are essentially identical to those of the cup-type model. The difference is the employment of a Dynamic Spline, which has the appearance of the Circular Spline, but transfers the output torque from the Flexspline to an output shaft.

The Dynamic Spline meshes with the Flexspline and has an equal number of gear teeth. Flexspline shape rotation results in tooth engagement/disengagement within the same tooth space, and thus is a 1:1 ratio. The system, therefore, is a Flexspline output with the same characteristics as the three-element HDC model, i.e., gear reduction ratio tabulated with the direction of rotation opposite to the input.

Similarly, the Circular Spline, although not preferred, may be the output member. This will increase the reduction ratio by one and the direction of rotation will be the same as the input.

Ultrahigh dual ratio capability is obtained by utilizing two Circular Splines in mesh with the Flexspline with each developing a different single-stage ratio. The compounding of single-stage ratios of 160:1 and 159:1, for example, results in a total reduction ratio of 25,600:1.

Dimension (mm) HDF

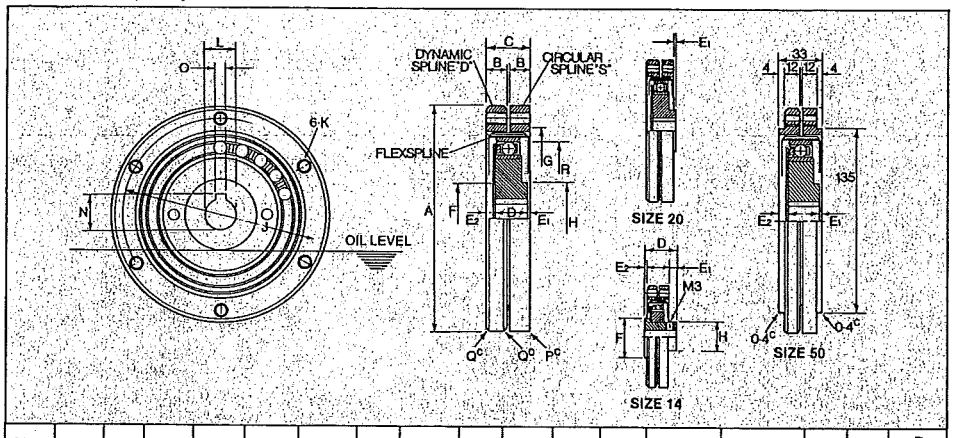

SIZE	A	B	C	D	E_1	E_2	F	G	H	J	K	L	N	O	P	Q	R MAX.
14	50	5	10.5	15*	3.75*	.75*	18*	36	14*	44	M3	6*	–	–	0.2	1	32
20	70	6	12.5	11.4	0.95*	2.05*	20	53	20	60	M4	9	$10.4^{+0.1}$	3 ± 0.012	0.2	1	47
25	85	8	16.5	12.8	0.35	3.35	24	66	25	75	M5	11	$12.8^{+0.1}$	4 ± 0.015	0.2	1.5	59
32	110	10	20.5	15.6	0.95	3.95	34	84	36	100	M6	14	$16.3^{+0.1}$	5 ± 0.015	0.2	1.5	77
40	135	13	27	19.4	1.8	5.8	40	103	42	120	M8	14	$16.3^{+0.1}$	5 ± 0.015	0.4	2	95
50	170	*	*	23.2	2.9*	6.9*	50	135	54	150	M10	19	$21.8^{+0.1}$	6 ± 0.015	0.4	2	119

Dimensions are for reference only. Require detail prints will be furnished upon request.
See NOTE to Dimensions on Page 5.

Rating Table HDF Based on 2000 hours B10 life (10,000 hours average life)

HUF SIZE	**** RATIO	Output Torque: Oil Lubrication, Input RPM 3500	1750	500	Grease Lubrication: Maximum Input RPM	Maximum*** Output Torque At Max. RPM	Maximum** Output Torque	Starting Torque NL (oz-in approx.)	W/G Inertia (lb-in² approx.)	Backlash arc min. max.	Wgt. (lbs. approx.)
14	80	39	49	70	3500	39	90	2.5	.015	36	.2
	100	39	49	70			90			34	
	110	39	49	70			90			31	
20	80	170*	215	250	2200	136	250	4.5	0.06	33	.7
	100	170*	215	300			300			28	
	120	170*	215	320			350			26	
	160	170*	215	320			390			22	
25	80	280*	355	425	2000	234	425	6.8	0.17	28	1.3
	100	280*	355	540			600			25	
	120	280*	355	540			700			21	
	160	280*	355	540			780			19	
32	80	560*	710	950	1500	512	950	9.3	0.63	23	2.3
	100	560*	710	1070			1200			20	
	120	560*	710	1070			1400			18	
	160	560*	710	1070			1550			15	
40	80	1180*	1490	1700	1250	960	1700	22	1.8	23	4.4
	100	1180*	1490	2260			2400			18	
	120	1180*	1490	2260			2700			16	
	160	1180*	1490	2260			3100			11	
50	80	2200*	2780*	3100	1000	1875	3100	51	5.1	16	7.3
	100	2200*	2780*	4200			4200			16	
	120	2200*	2780*	4200			5200			14	
	160	2200*	2780*	4200			5800			8	

*Thermal limited — 50% duty cycle recommended with on time not exceeding 15 minutes.
**This torque is not to be exceeded under any circumstances including momentary overload.
***For rating at reduced Input RPM use relationship $T = \frac{75{,}000 \times \left(\frac{size}{10}\right)^2}{RPM}$ with limit not to exceed Maximum Output Torque rating.
****Consult factory for special high ratio capability up to 50,000:1 approximate.

HDF EFFICIENCY VS. OUTPUT TORQUE
OIL LUBRICATION HDUF-20-160

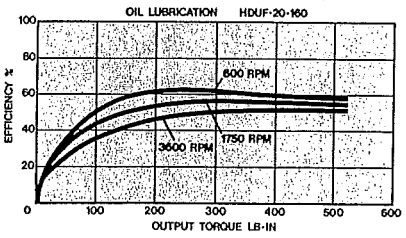

HDF EFFICIENCY VS. RATIO
AT RATED TORQUE

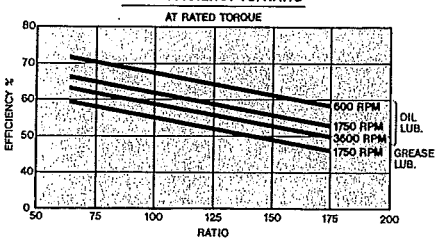

HD 0013

Versatility in Applications

Here is a small sampling of the variety of ways Harmonic Drive strain wave gearing can be applied.

COMPACT REDUCTION

GEARHEAD/MOTOR ASSEMBLY

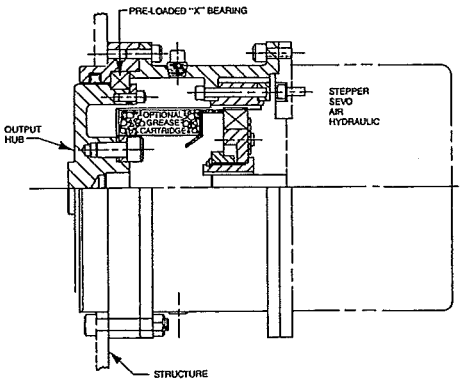

MACHINE TOOL DRIVE

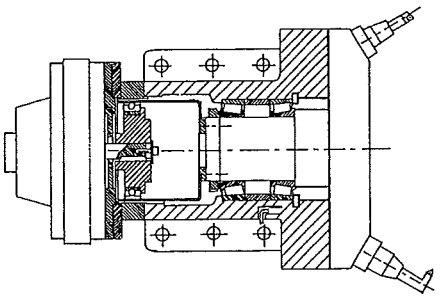

ROTARY INDEX TABLE

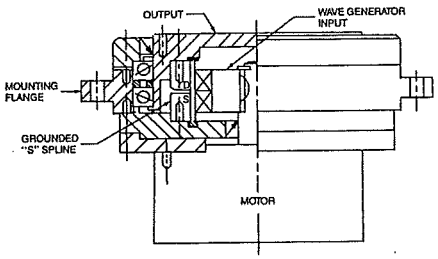

ROBOT JOINTS

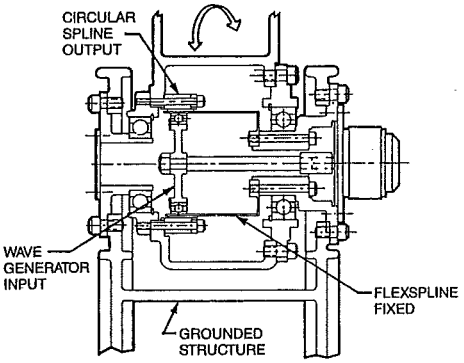

ROBOT BASE-ROTATE AXIS

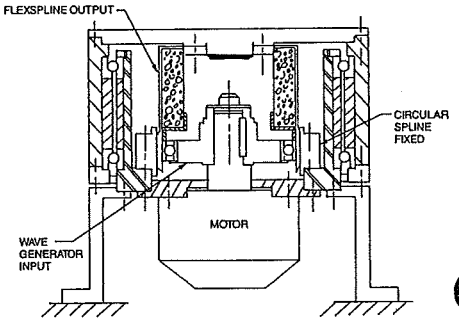

DIFFERENTIALS

DIFFERENTIAL WEB TENSION CONTROL DRIVE

a. Roll #1 is driven by the primary power source.
b. Roll #2 is driven by Roll #1 through a 1:1 timing belt with power input to the Circular Spline and output from the Flexspline.
c. Wave Generator trim input is driven from Roll #1 by a variable speed pulley. At 1:1 Roll #1/ Roll #2 speed is the same.
d. Driving the Wave Generator faster or slower than Roll #1 causes a proportional reduction or increase of the Roll #2 RPM respectively.
e. Velocity errors from the variable speed pulleys are divided by the HDC ratio.

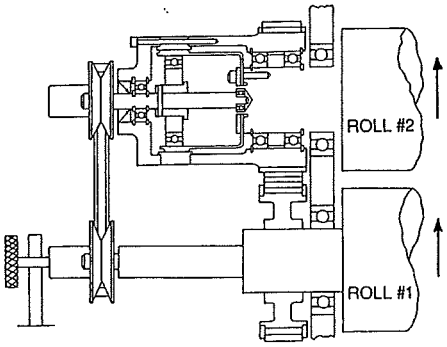

DIFFERENTIAL REGISTER CONTROL DRIVE

a. Power input from the blanket cylinder drives the plate cylinder through the Circular Spline input/Flexspline output at near 1:1 speed ratio. A correction to maintain the exact blanket/plate RPM is made in the gear train from the blanket cylinder.
b. Hand rotation of the frictionally restrained Wave Generator CW or CCW provides an angular phase adjustment of the plate cylinder through the tabulated Harmonic Drive reduction ratio.

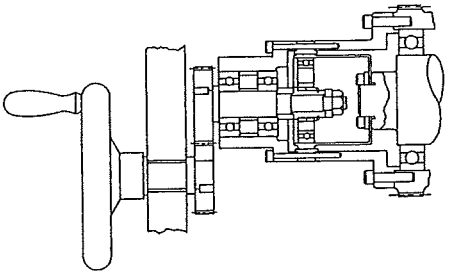

PRINTING PRESS ROLLER ADJUSTMENT DRIVE

Back-to-back HDC gearing of the same ratio result in a 1:1 speed or phasing differential when the trim motor is held stationary.

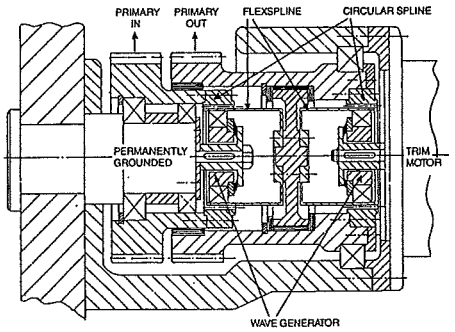

HD 0014

SPEED INCREASERS

HAND CRANK GENERATOR

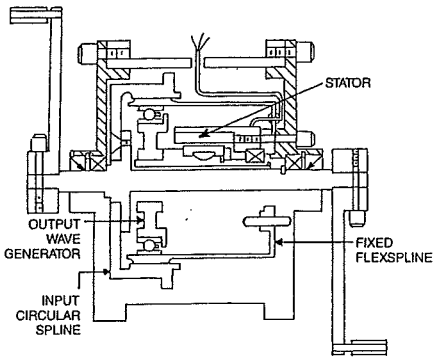

MECHANICAL OR VISCOUS DAMPER

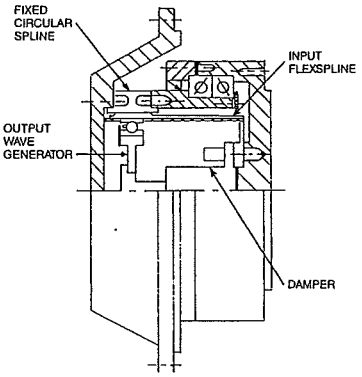

TWO SPEEDS—ONE GEAR SET

TWO-SPEED MACHINE TOOL DRIVE FROM ONLY ONE MOTOR

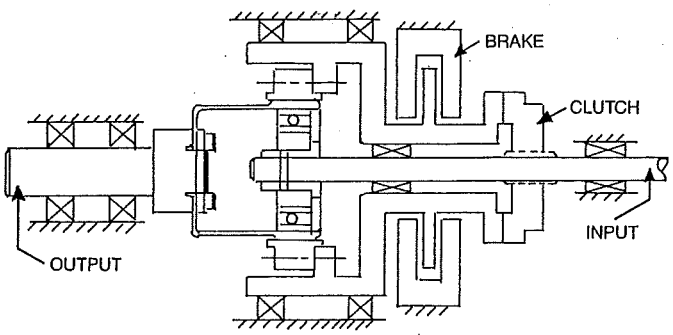

TWO-SPEED LINEAR OUTPUT DRIVE FROM ONE MOTOR

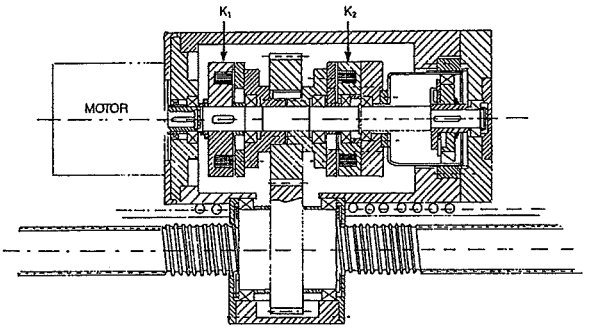

EXTREMELY COMPACT REDUCTION

COMPACT, HIGH REDUCTION RATIO, ACTUATOR

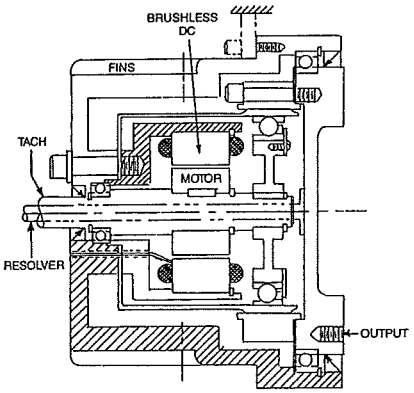

MISSILE FIN ACTUATOR

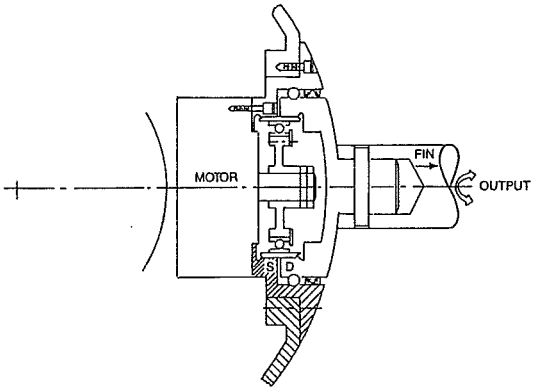

SATELLITE ACTUATORS

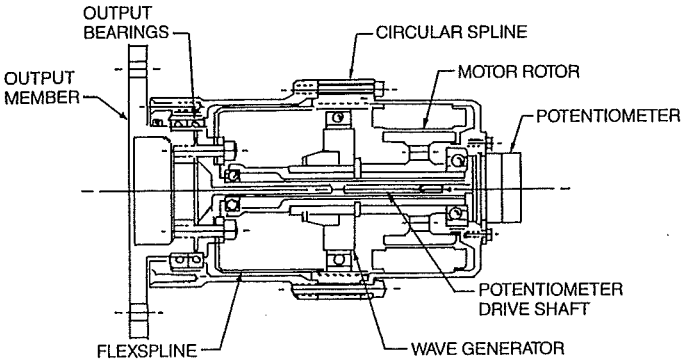

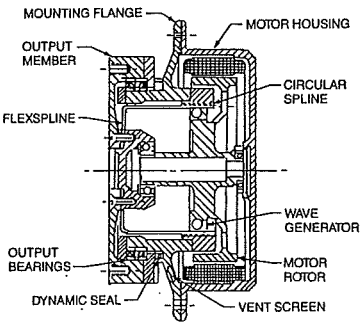

COURTESY OF SCHAEFFER MAGNETICS, INC.

HD 0015

HARMONIC DRIVE
Infinit-Indexer® Shaft Phasing Coupling

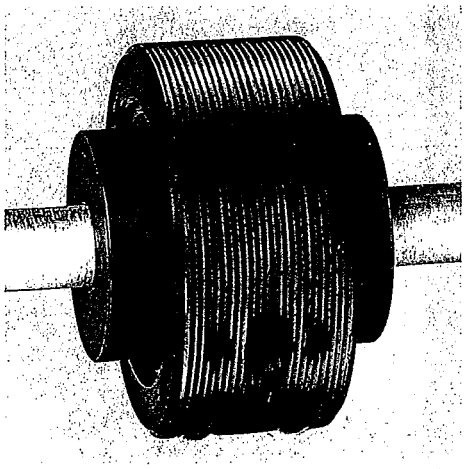

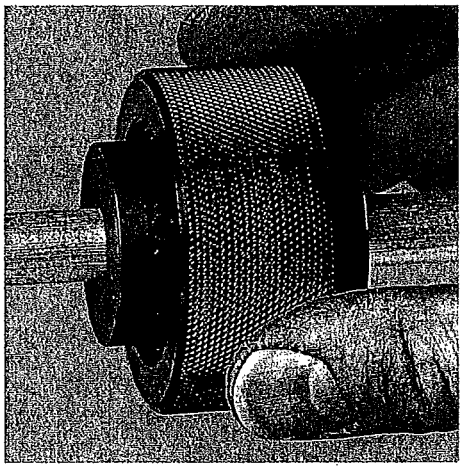

DESCRIPTION
The INFINIT-INDEXER coupling is a Harmonic Drive shaft-mounted gear reducer, which employs the strain wave gearing principle. The input is through the knurled adjusting nut. When one hub is rotationally fixed, output is through the other hub. Under normal running conditions, there is no relative rotation of the elements, and the INFINIT-INDEXER functions as a rigid shaft coupling.

Phase adjustment of the coupling and connected shafts is accomplished with the drive system stopped. Hand rotation of the adjusting nut produces positive, infinitely variable, relative rotation of the hubs through a 100:1 reduction ratio.

RIGID COUPLING WITH HIGH TORQUE CAPABILITY
On rotating shafts, the INFINIT-INDEXER® functions as a rigid shaft coupling capable of transmitting high torque loads in either direction of rotation at high or low shaft speeds.

PROVIDES HAND ADJUSTABLE PRECISE STATIC SHAFT PHASE ADJUSTMENT
When shafts are stopped, the INFINIT-INDEXER functions as a 100:1 gear reducer. Input by hand rotation of the knurled outer nut with one shaft fixed results in angular phase adjustment of the other shaft.

TECHNICAL DATA
The INFINIT-INDEXER is offered in six sizes and selected based on the running torque rating from Table 1 and/or shaft size and desired D & S hub configuration from Table 2.

In the event the torque required to adjust the machine system is greater than the coupling output torque rating (Table 3), an auxiliary form of load assistance must be provided.

Couplings are furnished complete with hubs to specific order requirements or in minimum plain bore for alteration by the user.

INFINIT-INDEXER APPLICATIONS
The INFINIT-INDEXER provides the designer with a simple component which will solve an almost limitless variety of design problems through precise shaft phase adjustment.

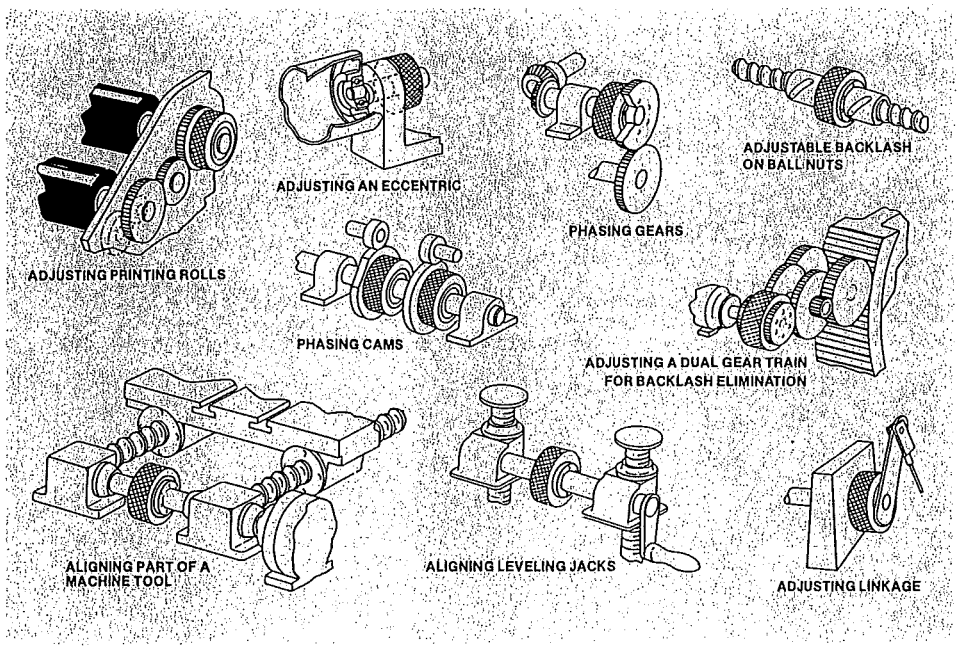

TABLE 1: Dimensions/Rating

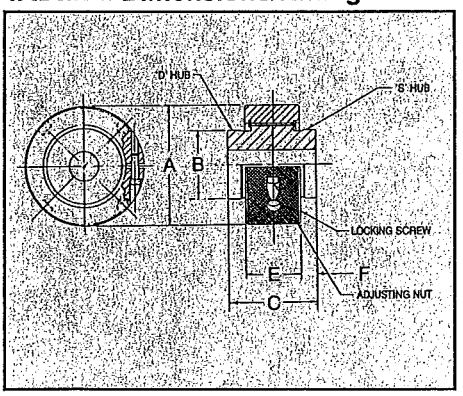

SIZE	A	B	C	E	F	TORQUE* RATING LB.-IN.	APPROX. WEIGHT LBS.
HDI- 05	2.00	1.00	1.43	1.04	.26	500	1.2
- 10	2.31	1.38	1.69	1.20	.31	1,000	1.5
- 25	2.88	1.75	2.18	1.58	.41	2,500	3
- 50	3.63	2.17	2.37	1.77	.41	5,000	5
-100	4.63	2.94	3.29	2.40	.62	10,000	11
-200	6.25	3.75	4.05	2.90	.84	20,000	24

*Torque rating is for continuous one direction of rotation. For reversing torque systems, the tabulated rating is the sum of the CW and CCW torque.

NOTE: Dimensions subject to change without notice. Certified print available on request.

HD 0016

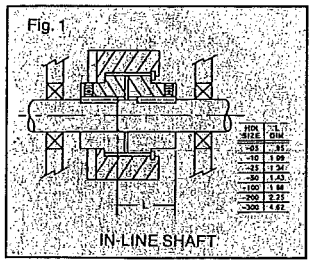

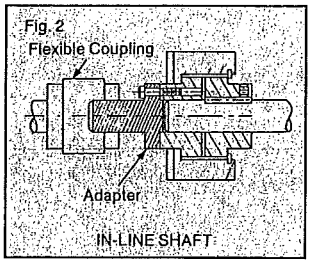

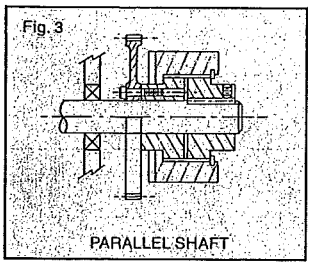

INSTALLATION

The INFINIT-INDEXER is installed in a machine system either as an in-line shaft coupling per Fig. 1 and Fig. 2 or parallel shaft coupling per Fig. 3.

In-Line Shaft

1. The hubs per Fig. 1 are attached to the driving and driven shafts by pin or key/setscrew at the designer's option.
2. In order to properly align shafts concentric to one another, either the driven or driving shaft should pass completely through one hub and engage the other by an amount determined by the "L" dimension. The hubs are symmetrical; therefore, the "L" length applies to a piloting shaft length entering from either hub face.
3. The coupling is designed to transmit pure torque only. Radial reaction loads generated by gears, sprockets, shaft misalignment, etc., must be isolated from the unit by appropriate shaft bearing supports.

   When it is not possible to maintain good shaft concentricity, it is recommended that the INFINIT-INDEXER be mounted in conjunction with a flexible coupling and adapter as noted in Fig. 2.

Parallel Shaft

1. One hub is connected to the shaft by either pin or key/setscrew at the designer's option per Fig. 3.
2. Connection of a gear, sprocket, etc., is by means of a tapped hole hub.
3. The shaft should pass completely through the attached sprocket, gear, etc., and the INFINIT-INDEXER at a uniform diameter with a tight running fit.

ADJUSTMENT

One revolution of the knurled outer nut results in 3.6° of shaft phase adjustment. With the "D" hub fixed, rotation of the "S" hub is opposite to the direction of nut rotation. With the "S" hub fixed, rotation at the "D" hub is in the same direction as nut rotation.

The coupling is essentially self-locking, and applications requiring frequent adjustment can be investigated for the possibility of operating without having to seat the locking screw. However, those applications in which the coupling is subjected to typical motor start up accelerations, sudden stops, and/or a vibratory environment will require use of the screw to maintain a phase setting.

The coupling during adjustment is not intended to drive against any significant reaction load that may exist between the connected shafts. However, some adjusting nut torque amplification results to provide a hub drive torque capability within recommended limits noted per Table 3.

TABLE 2: Hub Dimensions

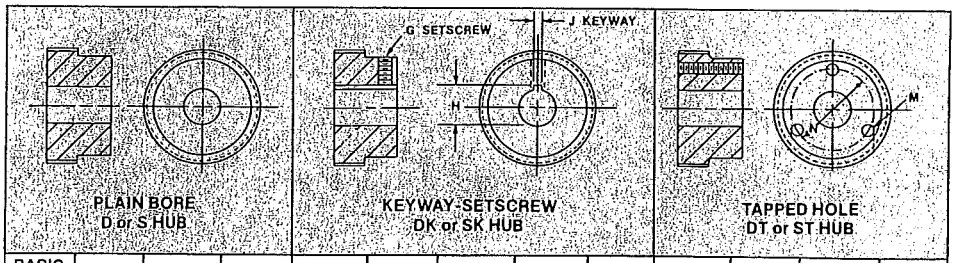

BASIC HDI SIZE	BORE SIZE	D HUB	S HUB	D HUB	S HUB	G	H	J	D HUB	S HUB	M* UN-2B	N
-05	.250	2D	2S	2DK	2SK	8-32	—	—	2DT	2ST	6-32	.750
	.375	3D	3S	3DK	3SK	8-32	.409	.062	3DT	3ST	6-32	.750
	.500	4D	4S	4DK	4SK	8-32	.561	.125	4DT	4ST	6-32	.750
-10	.500	4D	4S	4DK	4SK	1/4-20	.585	.187	4DT	4ST	8-32	1.125
	.625	5D	5S	5DK	5SK	1/4-20	.710	.187	5DT	5ST	8-32	1.125
	.750	6D	6S	6DK	6SK	1/4-20	.837	.187	6DT	6ST	8-32	1.125
-25	.750	6D	6S	6DK	6SK	1/4-20	.863	.250	6DT	6ST	10-32	1.500
	.875	7D	7S	7DK	7SK	1/4-20	.988	.250	7DT	7ST	10-32	1.500
	1.000	8D	8S	8DK	8SK	1/4-20	1.114	.250	8DT	8ST	10-32	1.500
-50	1.000	8D	8S	8DK	8SK	1/4-20	1.114	.250	8DT	8ST	1/4-20	1.750
	1.250	10D	10S	10DK	10SK	1/4-20	1.368	.250	10DT	10ST	1/4-20	1.750
-100	1.250	10D	10S	10DK	10SK	3/8-16	1.418	.375	10DT	10ST	5/16-18	2.500
	1.625	13D	13S	13DK	13SK	3/8-16	1.793	.375	13DT	13ST	5/16-18	2.500
	1.750	14D	14S	14DK	14SK	3/8-16	1.918	.375	14DT	14ST	5/16-18	2.500
-200	1.750	14D	14S	14DK	14SK	1/2-13	2.026	.625	14DT	14ST	3/8-16	3.125
	2.000	16D	16S	16DK	16SK	1/2-13	2.276	.625	16DT	16ST	3/8-16	3.125
	2.500	20D	20S	20DK	20SK	1/2-13	2.778	.625	20DT	20ST	3/8-16	3.125

*Six holes equally spaced. True position .015 diameter except sizes -05 and -10 three holes.
TO ORDER: Specify the basic size and desired D and S hub configuration.
Example: HDI 10 - 6D - 6SK specifies a size - 10 with D hub .750 diameter plain bore and S hub .750 diameter bore with keyway and setscrew. See page 20 for complete ordering information.

TABLE 3: Adjustment Torque Rating

Unit Size	Adjusting Nut Input Torque (Lb. In.) Ref.	Hub Output Torque (Lb. In.)
-05	4	20
-10	8	40
-25	16	80
-50	32	160
-100	76	380
-200	150	750

Spanner wrench holes are provided on the O.D. of the adjusting nut in sizes 50, 100, and 200.

HARMONIC DRIVE RESPONSYN® Ultrahigh resolution stepper

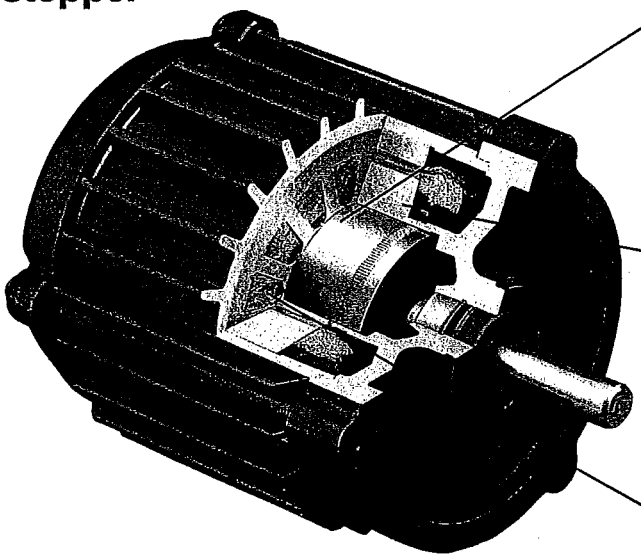

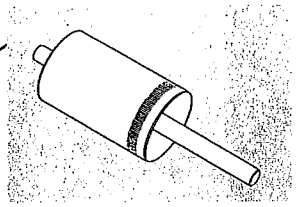

Thin Hollow "Shell Type" Rotor
- High Start/Stop Rates
- Motor Reaches Full Speed in About 1.2 Milliseconds
- No Resonance Through Entire Torque/Speed Range

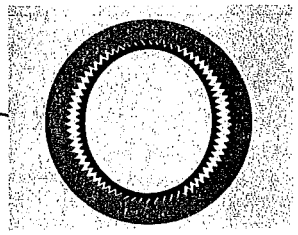

Positive Spline Engagement at Every Step
- Exceptional Torsional Stiffness
- Accurate Positioning Even Under Real Inertia Loading
- High Resolution—Up To 4000 Pulses Per Revolution Without Ministepping
- 5-10 Milliseconds Settling Time

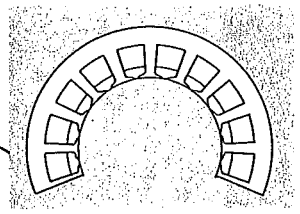

Discrete Pole Stator
- For Simple Open-Loop Unipolar Control
- Torques to 350 Oz. In.

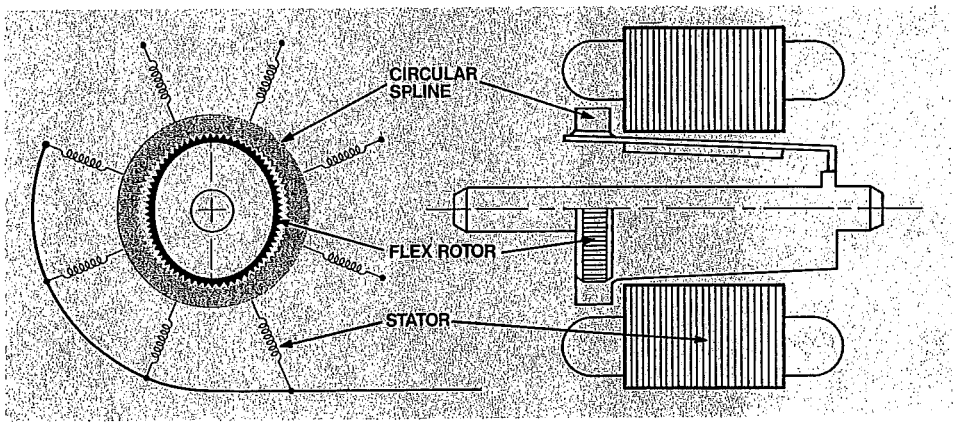

The RESPONSYN® stepping motor is a precision electromechanical actuator with a high speed input, the stepping magnetic stator field; a fixed element, the Circular Spline and a high torque output, the flexrotor.

The flexrotor is flexible and toothed on its outer surface. The Circular Spline is rigid and toothed on its inner surface. A magnetic field, produced by energizing opposing stator poles, pulls the flexrotor into an elliptical shape engaging the Circular Spline.

Rotating the magnetic field by turning on and off sequential pairs of poles causes the elliptical shape of the flexrotor to rotate in progressive mesh with the Circular Spline.

Since the flexrotor has fewer teeth than the Circular Spline, a high ratio is produced (typically 100:1) which results in very small incremental steps and large torque capacity at the motor shaft.

Application Notes

Positional Accuracy
RESPONSYN® motors are most often applied in open-loop digital positioning systems, where absolute positional accuracy is extremely important. HDM-165 and HDM-185 motors are accurate to ±3.5 arc minutes. These accuracies are noncumulative, i.e., independent of the number of steps taken. The accuracies quoted above have been demonstrated by test on hundreds of production motors.

Transient Characteristics
The accompanying chart shows shaft motion as a function of time for a single step.

Typical values for the HDM-165-800-4 RESPONSYN® motor are:

Crossover Time (t_c) = 1.2 Milliseconds
Settling Time (t_s) = 6.3 Milliseconds
Overshoot (A_p) = 40 Percent
Step Angle (Θ_s) = .45 Degrees

Crossover time (t_c) from the zero to the point where the shaft accomplishes rotation equivalent to 1 step (0.45 degrees for every 800 step/rev. motor) is generally between 1.2 and 1.5 milliseconds. With the exception of the first step, the time between steps is determined by the stepping rate at which the motor is driven.

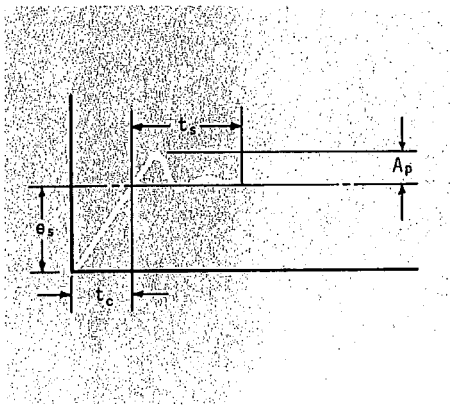

Note: RESPONSYN® motors reach operating speed in one fine angle step (0.45 degrees in this case).

No Lubrication
RESPONSYN® motors are prelubricated for life.

Holding Torque—Torsional Stiffness
RESPONSYN® motors provide holding torques up to two (2) times the maximum dynamic torque rating of the motor at rated current.

Temperature
RESPONSYN® motors can be operated in ambient temperatures between 0 °C and 40 °C. Performance characteristics are based on 40 °C maximum environment with the motor limited to rated current. Improved performance can be obtained by increasing the current. The motor case temperature must be limited to 65 °C maximum. In certain cases fan cooling may be necessary to maintain this temperature.

HD 0018

RESPONSYN® HDM-165 / HDM-185 Step Motors

General Specifications

Accuracy (noncumulative) . . . . . ±3.5 arc minutes
Holding Torque . . . . . 25 in. lbs.
Rotation . . . . . bidirectional
Torsional Stiffness . . . . . 3300 in. lb./rad.
Equivalent Rotor Inertia . . . . . .072 lb. in.²
Shaft Radial Load, Max.
(1 in. from face) . . . . . 163 lbs.
Shaft Radial Deflection
(1 in. from face) . . . . . 6600 lbs./in.
Shaft Thrust Load, Max. . . . . 185 lbs.
Case Operating Temperature, Max. . . . . 65 °C
Weight . . . . . 3.1 lbs.

Model Number		HDM-165-500-4	HDM-165-800-4 HDM-185-800-4	HDM-165-1000-4 HDM-185-1000-4	HDM-165-1600-8 HDM-185-1600-8	HDM-165-2000-8 HDM-185-2000-8
Resolution (Steps/Rev.)	Full Step	500	800	1000	1600	2000
	Half Step	1000	1600	2000	3200	4000
Step Size (Degree)	Full Step	0.72	0.45	0.36	0.225	0.18
	Half Step	0.36	.225	0.18	0.1125	0.09

HDM-165

Four-Phase Specifications

Recommended Driver DM204G
Winding . . . . . 4 phase, 5 wire
Resistance per Phase
At 20 °C . . . . . 5 ohms
At Operating Temperature . . 6.6 ohms (approx.)
Inductance (approx.) . . . . . 7.2 MH
Rated Current per Phase . . . HDM-165 - 1.5 amps
HDM-185 - 1.75 amps
Total . . . . . HDM-165 - 3.0 amps
HDM-185 - 3.5 amps
Switching Sequence . . . . . AB, BA, AB, BA, etc.

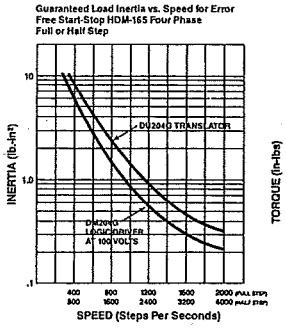

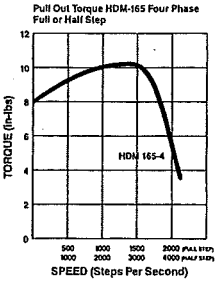

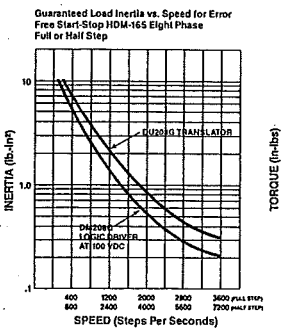

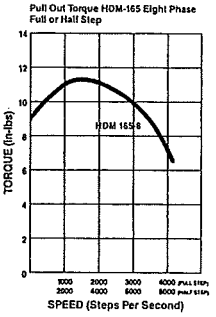

HDM-185

Eight-Phase Specifications

Recommended Driver DM208G
Winding . . . . . 8 phase, 9 wire
Resistance per Phase
At 20 °C . . . . . 9 ohms
At Operating Temperature . . 13 ohms (approx.)
Inductance (approx.) . . . . . 14.2 MH
Rated Current per Phase . . HDM-165 - 0.75 amps
HDM-185 - .875 amps
Total . . . . . HDM-165 - 3.0 amps
HDM-185 - 3.5 amps
Switching Sequence . . . . . ACBD, CBDA,
BDAC, DACB, etc.

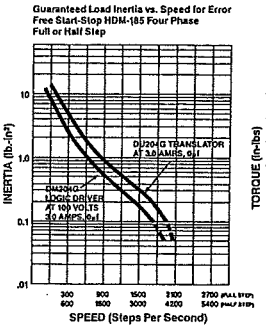

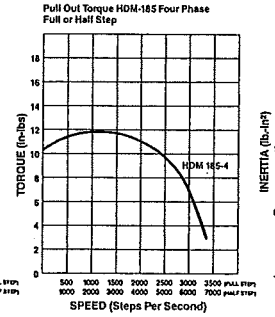

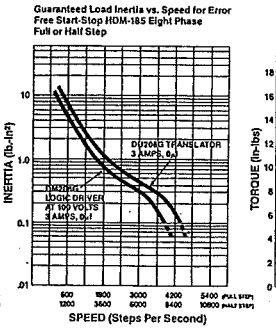

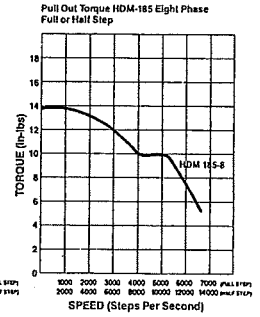

Dimensions HDM-165 and HDM-185

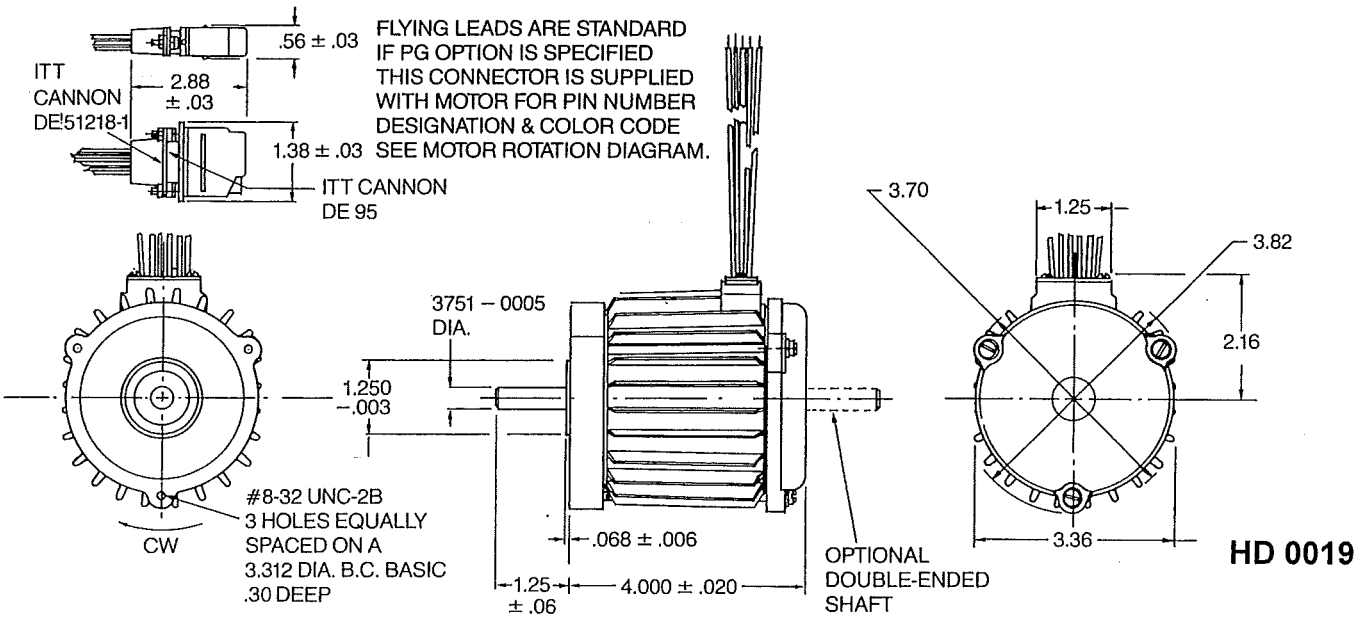

HD 0019

Other Harmonic Drive Products

Harmonic Drive offers products and capability beyond what is shown in this catalog. Below is a partial list of products available for special purposes. Specialized configurations for difficult design integration and performance problems in both aerospace and industry are also available. Please contact the factory or your area representative for more information.

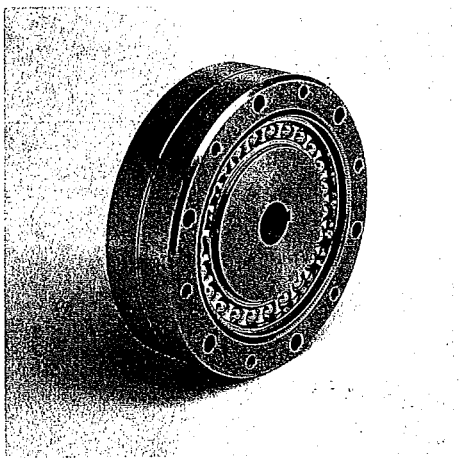

Double Bearing Pancake Gearing for increased torque capabilities beyond those of HDF.

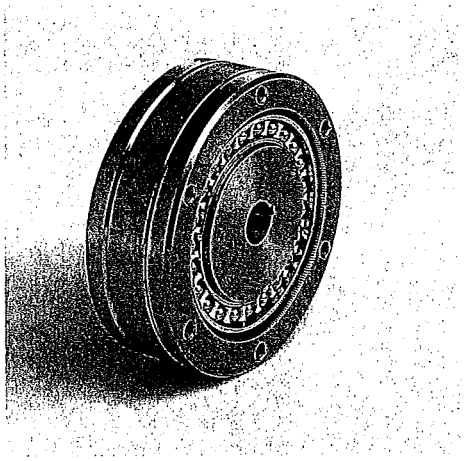

Back-to-Back Pancake Gearing for 1-to-1 differential designs.

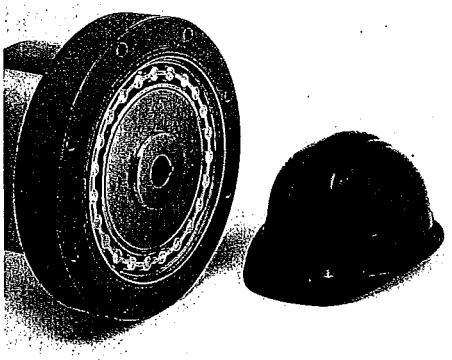

Extra Large Cup-Type Gearing and Reducers for torques to 75,000 inch pounds.

Ordering Information

Harmonic Drive products have part numbers that identify the product, size, ratio if applicable, and options. Examples of the different product categories are listed below. Specifications, other than those listed in the catalog as standard or options, are specials and are to include the designation SP at the end of the part number.

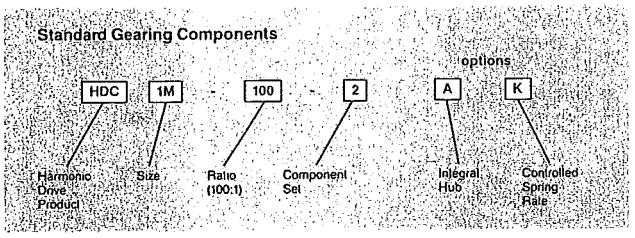

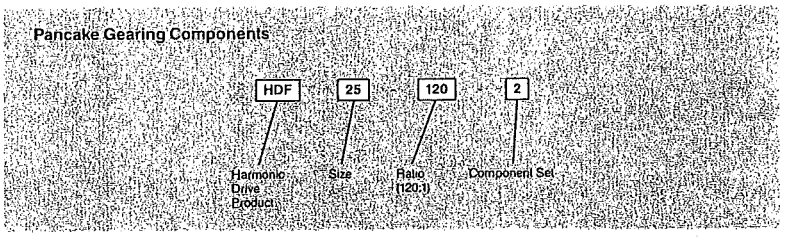

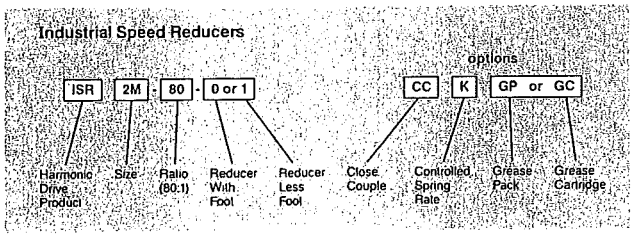

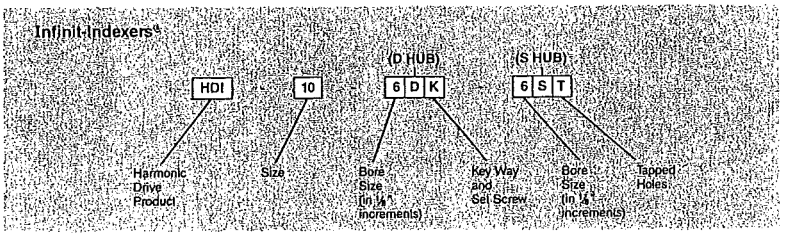

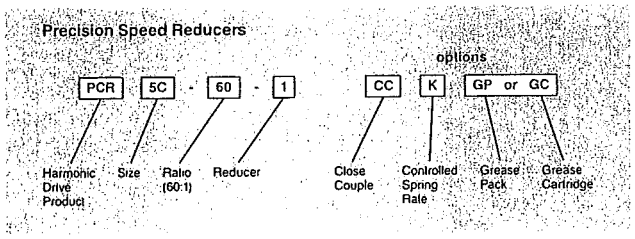

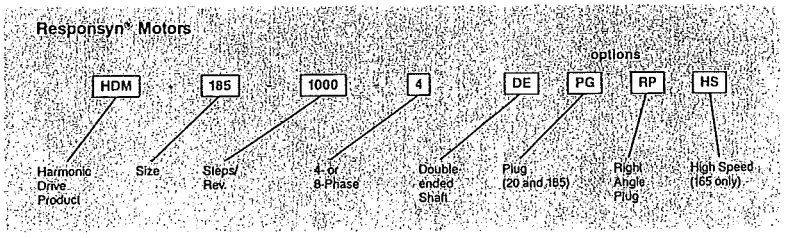

Harmonic Drive
51 Armory Street, Wakefield, MA 01880 USA
Tel: (617) 245-7802
Telex: 94-9442 FAX: (617) 246-4944

Harmonic Drive®

A Division of Quincy Technologies, Inc.

HD 0020

Form SB 2/88 15M

Printed in USA

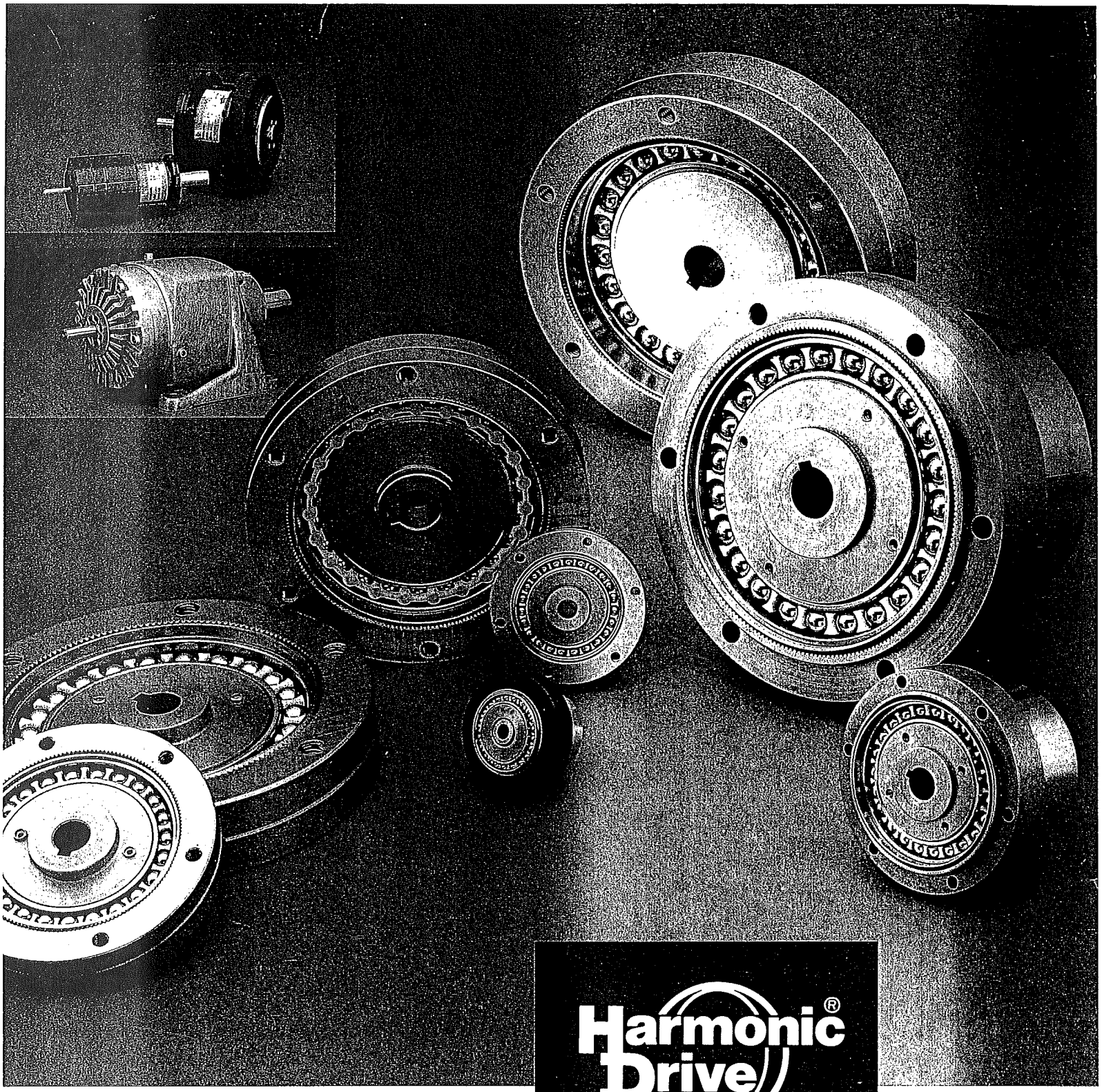

Harmonic Drive®

POWER TRANSMISSION PRODUCTS

For High Ratio Speed Reduction and High Accuracy Positioning

HD 0021

HARMONIC DRIVE —THE MACHINE DESIGNERS' DRIVE.

Harmonic Drive, the Ultimate in High-Ratio Mechanical Speed Reduction, Offers an Exceptional Combination of Benefits to Meet Even Your Most Difficult Drive Requirements

- Outstanding positional accuracy
- In-line, high single-stage reduction
- Low or zero backlash configurations
- Exceptional torque-to-weight ratio
- High efficiency
- Configuration versatility
- Long life and high reliability

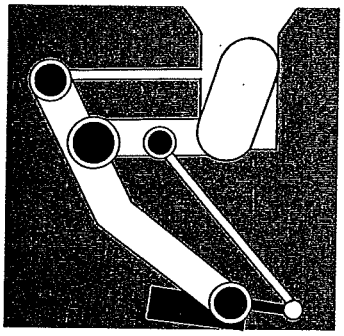

Robotics

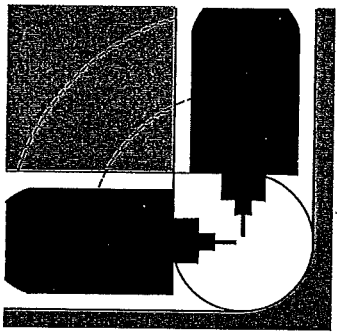

Machine Tools

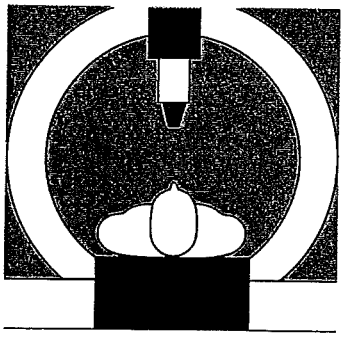

Medical Diagnostics

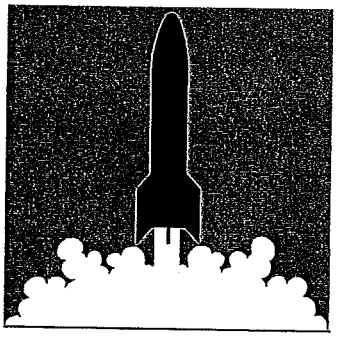

Aerospace

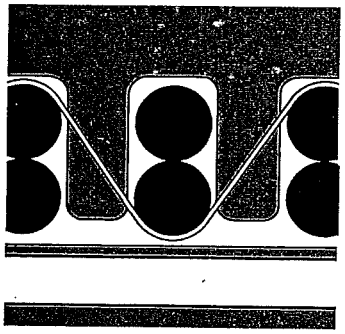

Printing Presses

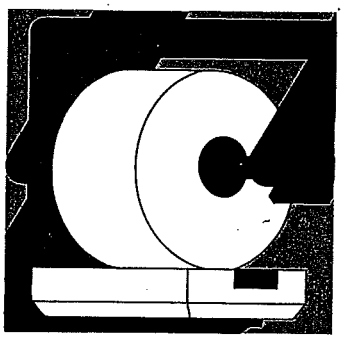

Paper Making

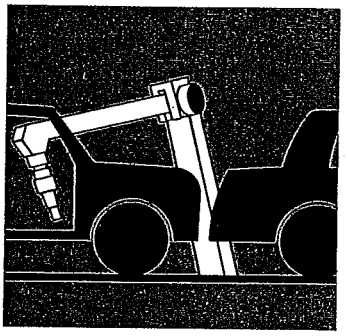

Factory Automation

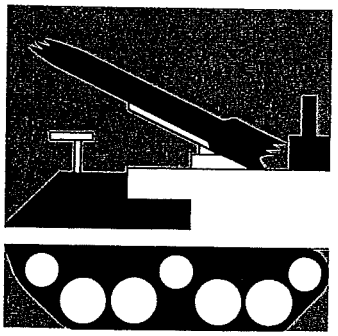

Military

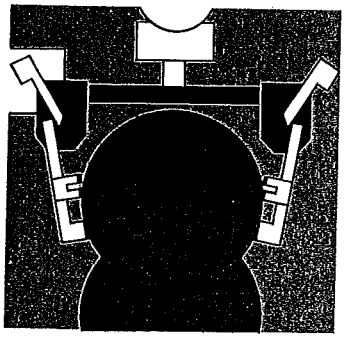

Semiconductor Manufacturing

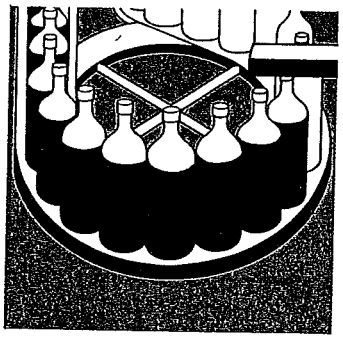

Packaging

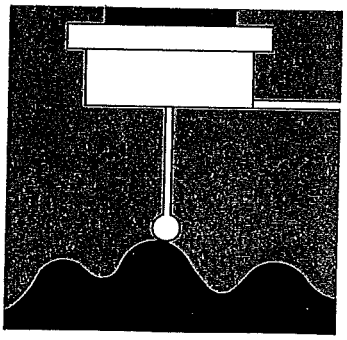

Test and Measurement

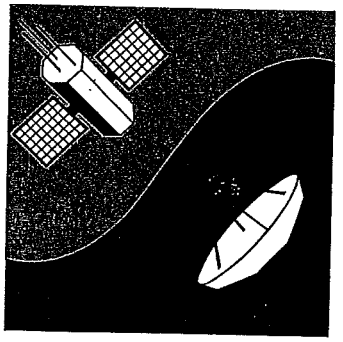

Communications

HD 0022

HARMONIC DRIVE TECHNOLOGIES
A Division of Teijin Seiki Boston, Inc.

Dear Sir:

Thank you for your recent inquiry and interest in Harmonic Drive gear products.

We are pleased to enclose our catalog(s) as requested.

Since the full capability and uniqueness of application of the drive is more than can be conveniently described in a catalog, we encourage and welcome the opportunity to assist you in any design considerations.

Please feel free to contact one of our field sales group or factory engineering personnel listed on the reverse side of this letter.

Very truly yours,

Bruce W. Mellow

Bruce W. Mellow
Applications Engineer

BWM/f
Enclosure

HD 0023

247 Lynnfield Street • Peabody, Mass. 01960-4905 • Phone: (508) 532-1800 • FAX: (508) 532-9406

NET PRICES
Effective
April 1, 1990

HARMONIC DRIVE
A Division of Quincy Technologies, Inc.

HDI INFINIT INDEXER PHASE ADJUSTING COUPLING
IN-STOCK PROGRAM

SIZE	BORE DIAM.	1-9	10-49	50-100
HDI-10	1/2 inch 5/8 inch	190	171	162
HDI-25	3/4 inch 1 inch	210	189	179
HDI-50	1 1/4 inch	280	252	238

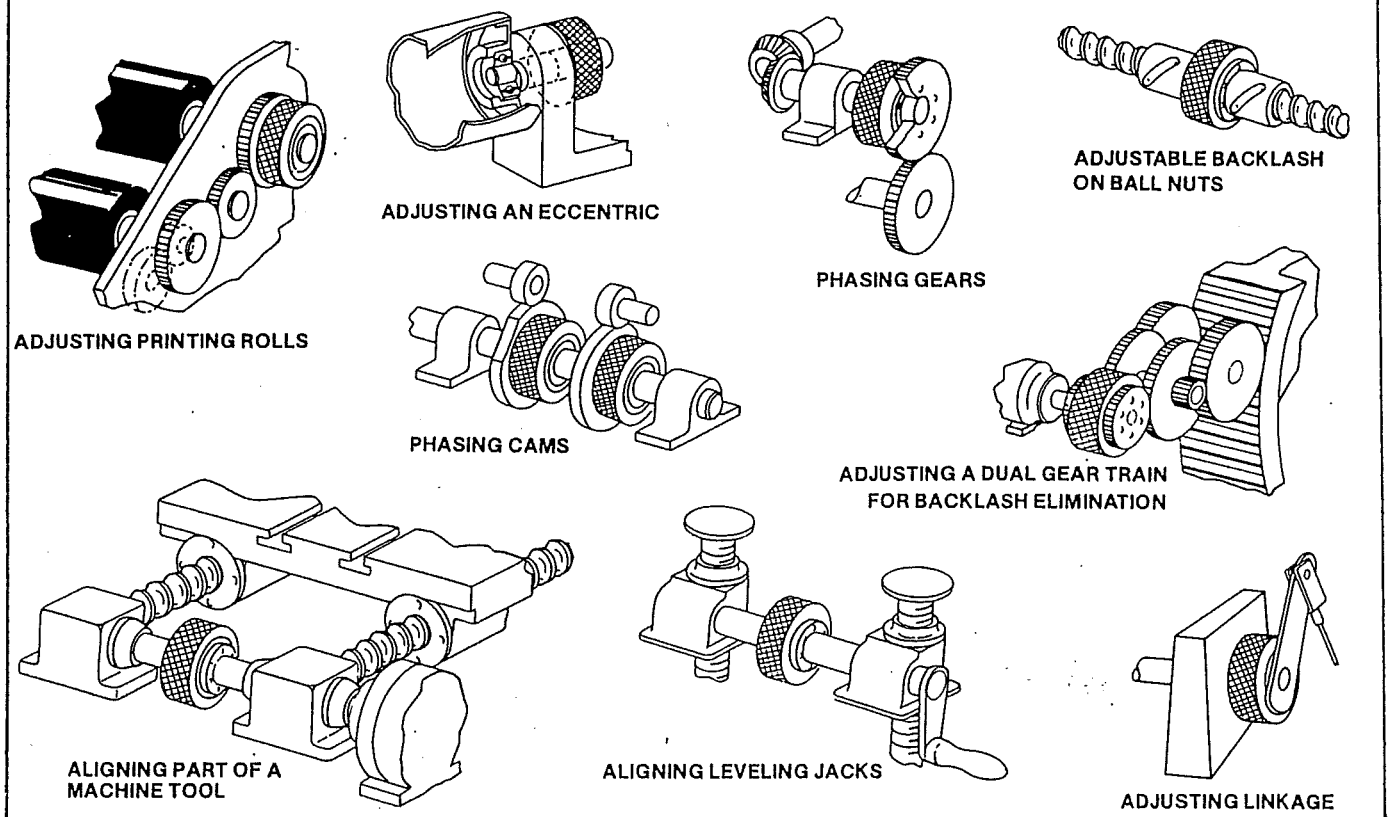

All orders:
Prices for quantities not listed will be quoted on request. All prices are FOB shipping point. Terms of payment are net 30 days. Harmonic Drive reserves the right to change prices, designs, and specifications without notice.

HARMONIC DRIVE
51 Armory Street
Wakefield, MA 01880

Tel: (617) 245-7802
Fax: (617) 246-4944

Harmonic Drive

A Division Of Quincy Technologies, Inc.

NET PRICES
EFFECTIVE
FEB. 1, 1991

HDI INFINIT-INDEXER PHASE ADJUSTING COUPLING
Build to Order Price List

SIZE	UNIT	1-4	5-9	10-19	20-49	50-99
HDI-05	2D-2S	222	194	184	178	173
	*D-*S	242	220	212	206	201
	DK-SK	381	275	250	235	226
	DT-SK	409	303	263	242	227
HDI-10	4D-4S	222	194	184	178	173
	*D-*S	242	220	212	206	201
	DK-SK	381	275	250	235	226
	DT-SK	409	303	263	242	227
HDI-25	6D-6S	245	209	199	193	188
	*D-*S	264	242	233	227	222
	DK-SK	398	302	276	261	249
	DT-SK	460	325	288	267	253
HDI-50	8D-8S	286	252	242	233	228
	*D-*S	315	294	284	278	271
	DK-SK	457	358	330	314	302
	DT-SK	519	381	342	320	305
HDI-100	10D-10S	454	431	408	396	387
	*D-*S	505	479	454	444	434
	DK-SK	684	551	520	500	484
	DT-SK	763	572	530	505	485
HDI-200	14D-14S	643	623	604	590	578
	*D-*S	718	691	673	657	643
	DK-SK	894	771	731	705	685
	DT-SK	986	796	744	710	686

Prices for quantities not listed will be quoted on request. All prices are FOB shipping point. Terms of payment are net 30 days. Harmonic Drive reserves the right to change prices, designs, and specifications without notice.

HD 0026

51 Armory Street • Wakefield, Mass. 01880 • Phone: (617) 245-7802 • FAX: 617-246-4944

NET PRICES
EFFECTIVE
FEBRUARY 1, 1991

HARMONIC DRIVE

STANDARD CUP TYPE POWER TRANSMISSION SYSTEMS

CUP GEARING COMPONENTS

HDC-2A
Standard Ratios

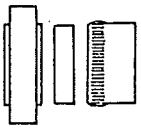

Size	1-4	5-9	10-24	25-49
10	388	373	357	342
1C	396	381	365	349
3C	409	392	376	360
5C	450	432	414	396
1M	511	490	470	449
2M	649	623	597	571
4M	824	791	758	725
8M	1250	1200	1150	1100
15M	1887	1811	1736	1660

PANCAKE GEARING COMPONENTS

HDF-2
Standard Ratios

Size	1-4	5-9	10-24	25-49
14	294	279	265	250
20	333	316	300	283
25	380	361	342	323
32	465	442	419	395
40	676	642	609	575
50	1045	993	940	888

HEAVY DUTY PANCAKE GEARING COMPONENTS

HDR-2
Standard Ratios

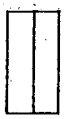

Size	1-4	5-9	10-24	25-49
20	470	451	432	414
25	547	525	503	481
32	590	566	543	519
40	788	756	725	693
50	1071	1028	985	942
65	1453	1395	1337	1279

Prices are applicable with the following standard reduction ratios:

HDC, PCR, PSR, ISR:
Size 10-60 & 80:1
Size 1C-60, 72, 80 & 100:1
Size 3C-60, 80, 100, 160 & 200:1

All other sizes - 60, 80, 100, 160 & 200:1

Non-Standard Ratios:
(add $400.00 set up for quantities 1-24 pcs.)

HDF, HDR:
Size 14-80, 100 & 110:1

All other sizes - 80, 100, 120 & 160:1

Non-Standard Ratios:
(add $500.00 set up for quantities 1-24 pcs.)

Standard ratios are those listed in the current edition of the Harmonic Drive Catalog. Depending on the availability of tooling, other nonstandard ratios can be provided.

Special Ratios: Provided on a custom basis.

PCR & PSR

Precision Speed Reducers

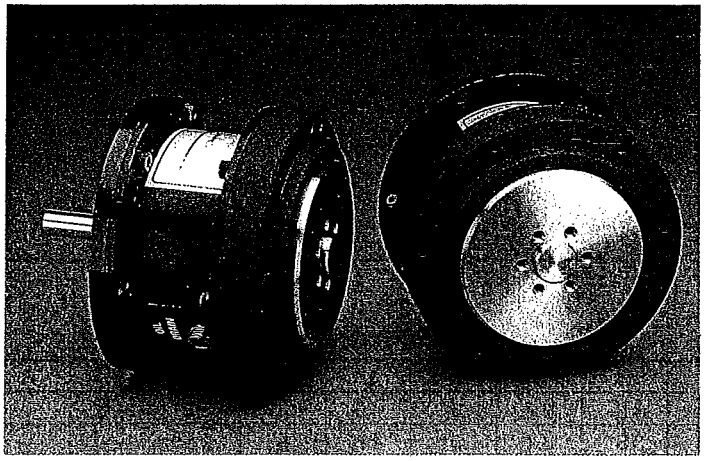

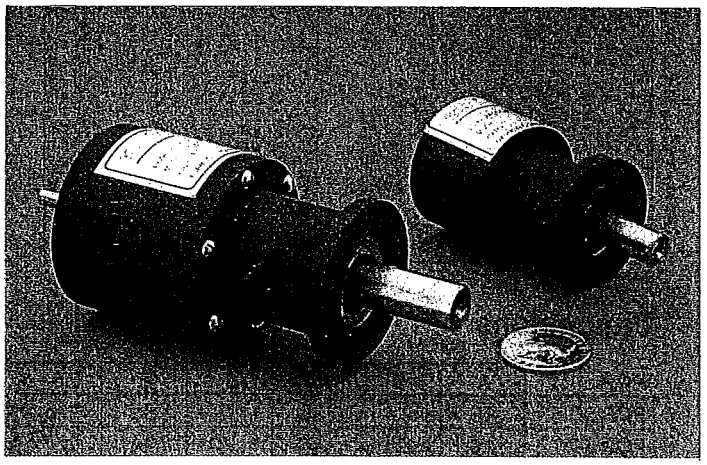

PCR Precision Compact Reducers

- Compact in-line speed reducers
- 50 to 200 times the torque from servomotors or steppers
- Provides a simple method for creating differentials
- Low to zero backlash
- Accuracies to arc minutes

PCR precision speed reducers provide high accuracy in minimum space. Unaffected by stepping impact, PCR reducers provide 50 to 200 times the torque of servomotors or steppers.

The heart of the PCR is advanced Harmonic Drive gearing, the industry's most adaptable and precise gearing systems for more than 30 years.

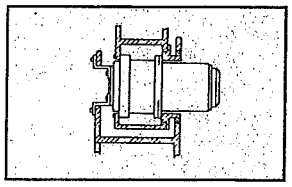

A.

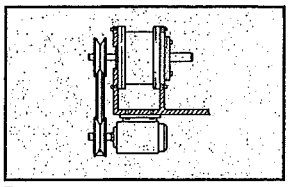

B.

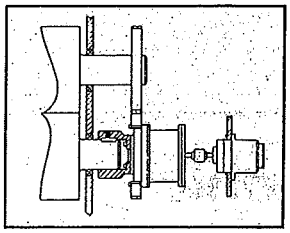

C.

A. Reducer hub output can be directly mounted to output structure for maximum space efficiency and stiffness.

B. Input and/or output can be attached to a shaft, belt, gear, or pulley for application versatility.

C. Reducer housing can be a rotating element, providing a simple method for creating differentials.

PSR Miniature Precision Reducers

- Conventionally configured speed reducers
- For small servo applications
- High ratios
- Low to zero backlash
- Accuracies to arc minutes

Now you can get the torque you need to do big jobs even from small stepper and servo motors. Harmonic Drive Precision Servo Reducers are miniature in-line drive speed reducers designed for applications requiring high ratios in small spaces. Small but strong, PSR reducers are unaffected by stepping impact.

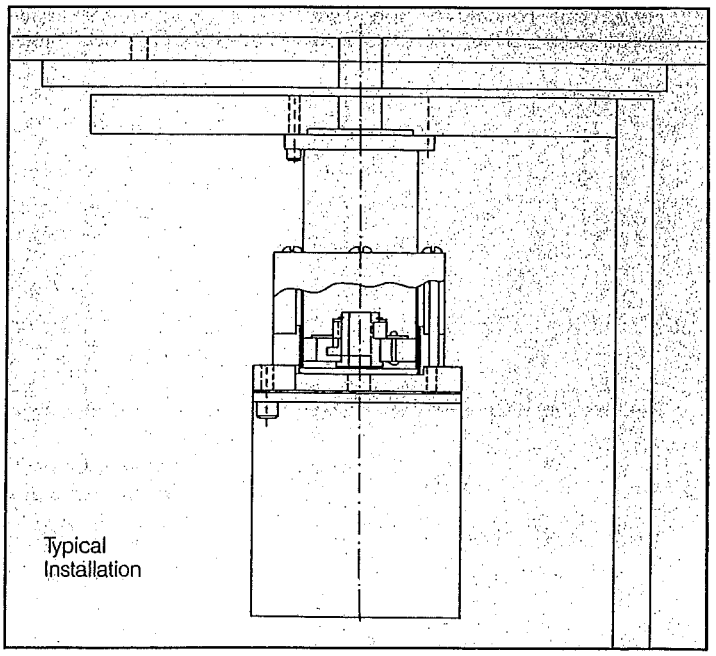

© 1990 Harmonic Drive

INFINIT-INDEXER®
Phase Adjuster

- ***Fine tune rotational position of shafts and machine parts***
- ***Phase cams***
- ***Adjust roll registration***
- ***Take up backlash in spur and worm gears***
- ***Synchronize indexing devices***

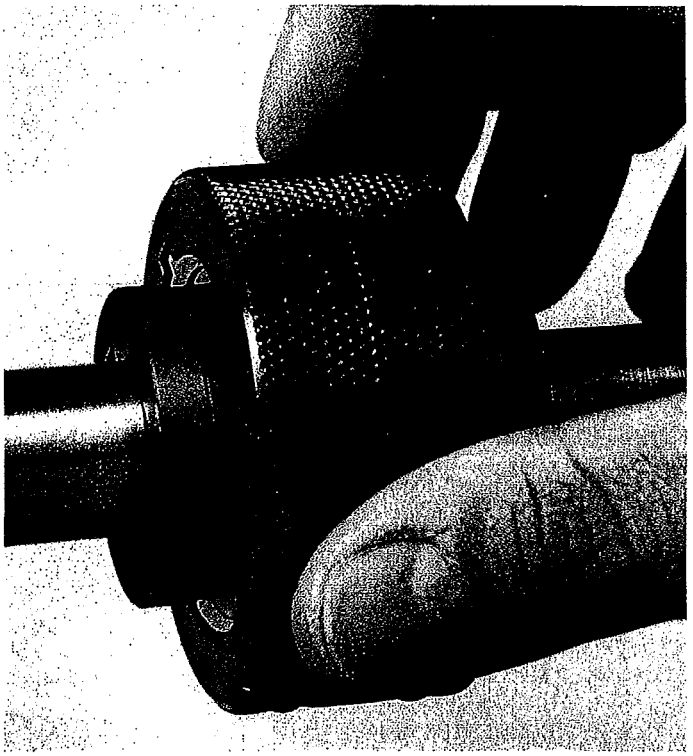

OPERATION

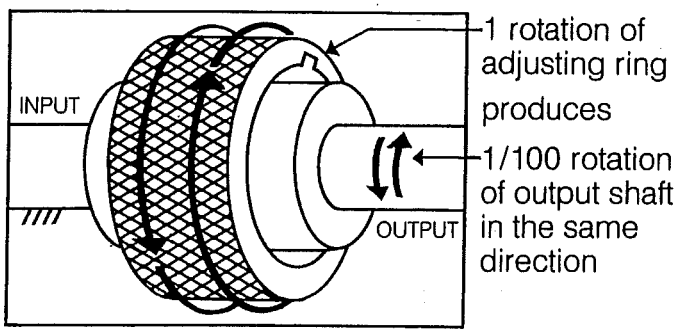

To operate, hand rotate the adjusting ring in either direction to produce a 100:1 reduction between the ring and the output. Adjust the friction adjustment/locking screw to desired resistance. For some applications, one adjustment will be sufficient for both shaft turning and phase adjusting modes. For more severe loading, such as hard stopping or higher torques, the friction adjustment/locking screw may be used to lock the adjusting ring in place to maintain phase.

3 MODELS, 5 BORE SIZES AVAILABLE FROM STOCK

INFINIT-INDEXERS are available immediately from stock in the standard bore sizes shown, with keyways and set screws, and tapped holes for face mounting of either hub. It is possible for the user to modify these configurations by disassembling the unit. The hub material is low carbon mild steel suitable for machining. Maximum bore diameters for each size are shown in notes to the dimensional drawings.

HDI Size	Bore Size	O.D.	Length	Torque Capacity
-10	½″ ⅝″	2⅜″ (60.3 mm)	1 11/16″ (42.9 mm)	1000 lb -in (113 Nm)
-25	¾″ 1″	3″ (76.2 mm)	2 3/16″ (55.6 mm)	2500 lb -in (283 Nm)
-50	1¼″	3¾″ (95.3 mm)	2⅜″ (60.3 mm)	5000 lb -in (565 Nm)

ISR

Industrial Speed Reducers

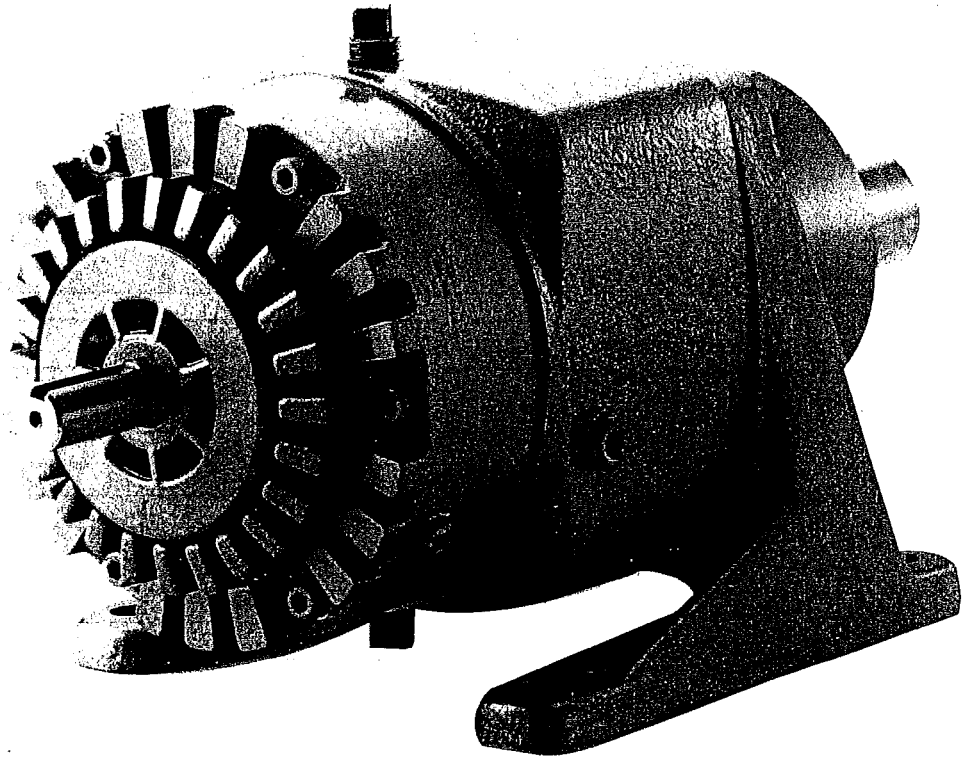

Description

The Harmonic Drive ISR Series speed reducer is a proven power transmission that will provide thousands of service-free operating hours when properly lubricated and operated within the specified ratings. Workmanship and material is warranted for one year from date of delivery; however, the average life under rated conditions is expected to be at least 15,000 hours. Parts List and Installation Drawings are available on request.

Installation

ISR Series speed reducers are offered for foot mounting (-0), face mounting (-1), and close couple (-cc) installations. Optional horizontal wall or ceiling mounting can be easily accomplished by simply repositioning the ISR housing in the mounting foot to maintain the vent plug in an upright vertical position. The ISR can be face mounted or foot mounted using the same four screw holes.

Close couple ISR reducers are identical to standard units except that the end cover and input shaft are removed. They can be used where space restrictions require a motor/gearhead configuration. The motor frame is connected to the reducer housing through an adapter plate normally furnished by the user. The motor shaft connects directly to the input stage of the reducer.

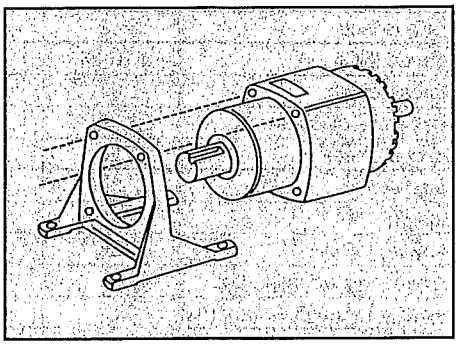

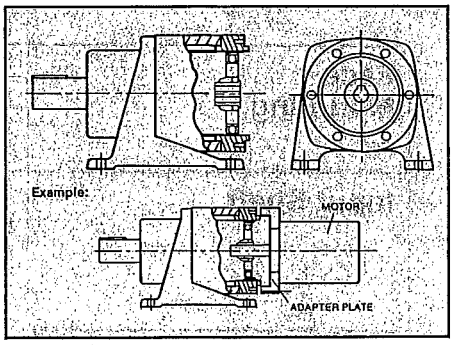

Lubrication

Oil

ISR reducers are shipped ready for horizontal, floor mounted service using oil lubrication unless otherwise specified. Automatic transmission fluid with a maximum 200°F operating temperature is recommended for normal drive conditions and must be added by the user to the prescribed level prior to operation. The approximate required volume is shown in the chart below. Consult the factory for alternate recommendations when abnormal conditions exist.

Size	3C	5C	1M	2M	4M
Oil Vol. (Fl. Oz.)	1.7	3.4	6.8	13.6	27

For vertical operation, oil fill, vent, and drain plugs must be rearranged. The only recommended vertical attitude is with the output shaft facing downward. Consult the factory for lubricating procedures.

Oil changes are recommended after the first 100 hours of operation and every 1000 hours or six months thereafter, whichever occurs first.

Grease

ISR units can be shipped with grease lubrication when specified by the customer. Because of the typically lower thermal ratings for grease lubrication, such units should not be operated at rated output torque at continuous input speeds greater than those shown below.

Size	3C	5C	1M	2M	4M
RPM	2800	2200	1700	1400	1100

Rated or higher input speeds can be considered for intermittent operation and/or reduced output torque conditions. While grease-lubricated units may be mounted and operated in any altitude, we recommend that users consult the factory for specific application recommendations.

© 1990 Harmonic Drive

HDB

Phasing Differential Gear Sets

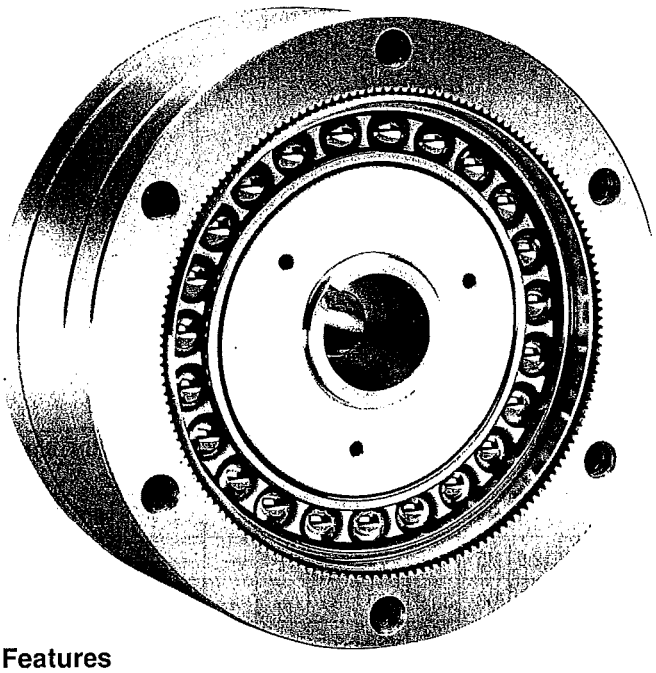

Features

- For dynamic registration of rotating elements
- A 1:1 differential with high-ratio trim adjustment
- Ideal differential for roll registration or angular shaft phasing
- Compact, low-backlash design for end-of-roll mounting

Harmonic Drive HDB differential drive transmissions allow easy and direct phasing of rotating elements while they are in motion. An end-of-roll dynamic phasing 1:1 differential, the HDB provides roll registration through precisely controlled trim input. It is ideally suited for web presses or other machines requiring constant monitoring and adjustment of rotating cylinders, wheels, cams, cutoff knives, and indexing devices. HDB's compact design integrates both driving and trimming capabilities at the end of the rolling element. Low backlash and high trim ratios allow precise tuning.

Derived from Harmonic Drive's field-proven pancake gearing,* HDB has two offsetting speed changes through which high drive horsepower is delivered to the roll at a 1:1 ratio, and trim is applied at low power through either of two inputs. This allows essentially direct driving of the roll and the flexibility of applying either manual trim, motorized trim, or both.

Drive Power

Drive power circulates through the gearset to the roll or driven element with an efficiency of approximately 99 percent. Power is applied to the first of three ring gears called circular splines. Torque is transmitted from the first circular spline (S1) to the third circular spline and output element (S2) through two Harmonic Drive gear ratios. The first is a very slight increasing ratio between S1 and the middle circular spline (D). The second is a very slight reduction ratio between the D spline and the S2 circular spline. When the drive is operated without trim input, the increasing and reducing ratios offset one another and the S1 and S2 circular splines turn in the same direction and at the same speed yielding an overall ratio of 1:1.

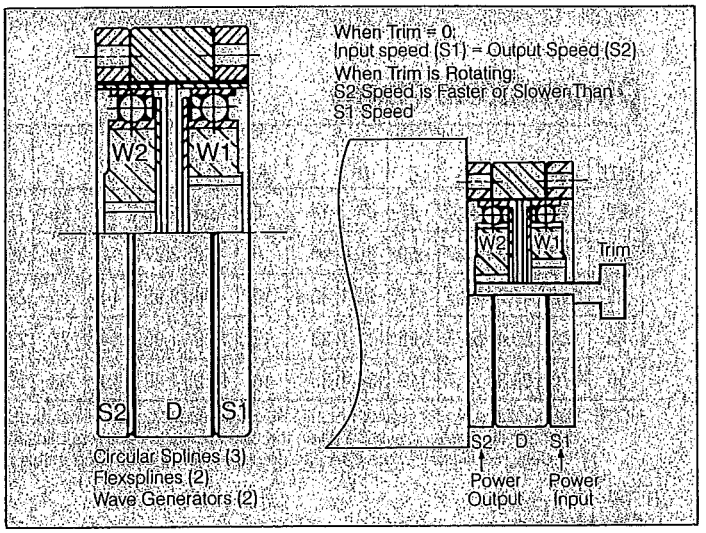

Trim

When trim is applied, one of the two wave generators (W2) rotates creating a high-ratio speed reduction between the trim speed and that of the S2 circular spline. With the other wave generator (W1) fixed to ground, the high-ratio trim input (depending on its direction) advances or retards the output speed relative to the power input speed.

The output speed of the HDB, while trim input is being applied, can be calculated with the following formula:

$$N_{HDB} = N_{S1} \pm [N_{W2} / (R+1)]$$

If two trim inputs are desired, each wave generator can be attached to a different input source. For example, one input can be a servomotor for high-speed automated trim, and the other a hand crank for low-speed manual trim. Consult the factory or your regional Harmonic Drive sales engineer for applications assistance.

Ratios

HDB Gear Sets are available in standard ratios of 80:1, 100:1, 120:1, and 160:1. Other ratios are available on a custom basis.

If an 80:1 ratio gear set is chosen, for example, trim is applied at a speed reduction ratio of either 80:1 or 81:1 depending on which trim shaft is used. High-ratio trim input allows the application of trim at low power to an element being driven at high horsepower.

*NOTE: See "Cup and Pancake Component Gear Sets" brochure for operating principles of Harmonic Drive pancake gearing.

© 1990 Harmonic Drive

HDR

Heavy-Duty Pancake Component Gear Sets

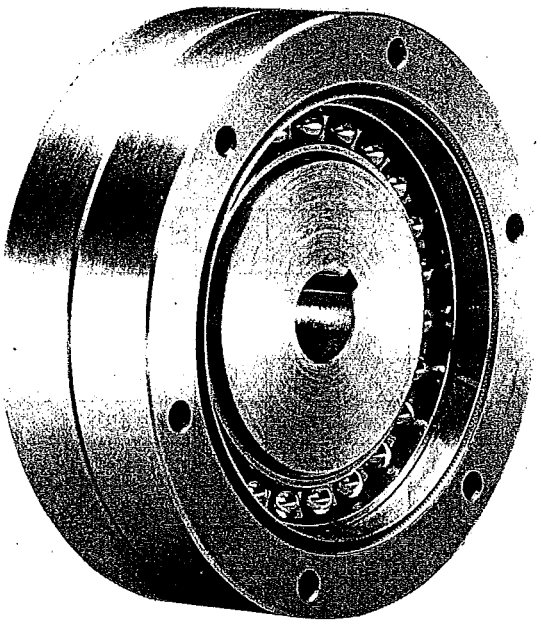

Features

- Double-bearing version of HDF Pancake Component Gear Sets
- High torque-capacity
- High shock capacity
- Ratios from 80:1 to 200:1
- Low backlash

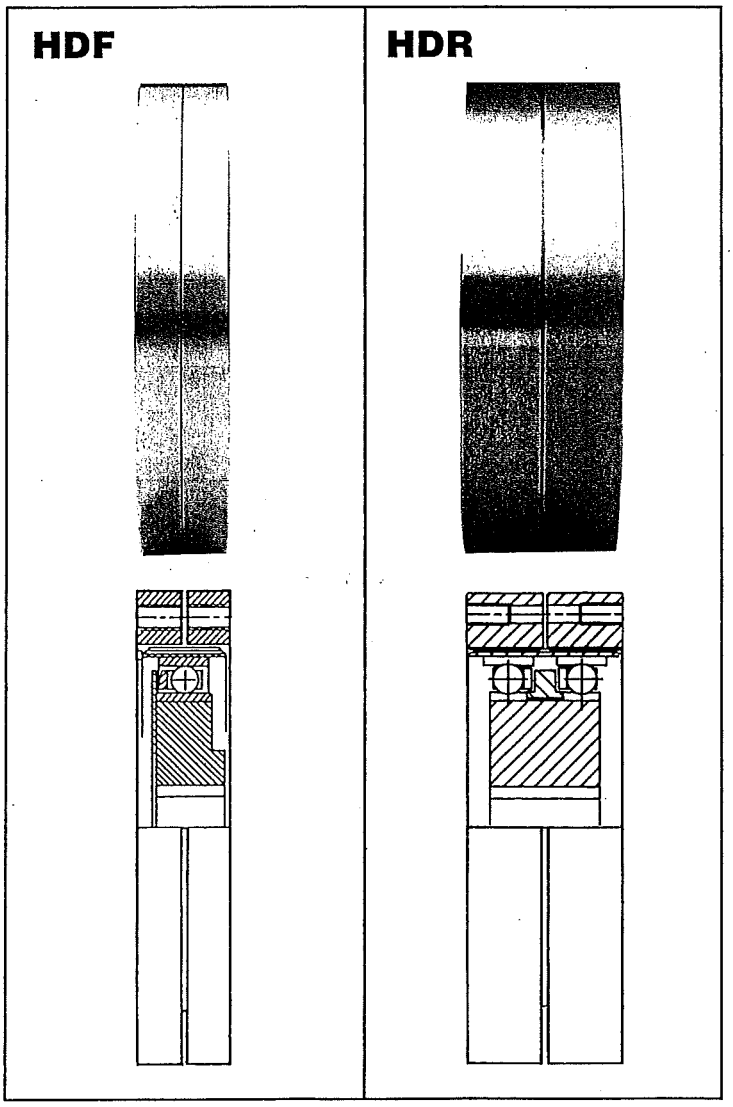

Harmonic Drive HDR Heavy-Duty Component Gear Sets provide the torque capacities of HDC Cup Components combined with axial compactness close to that of HDF Pancake Components. Actually a double-bearing version of the HDF Pancake gearing (described on Page 6 of the "Cup and Pancake Component Gear Sets" brochure), HDR gearing is recommended for applications where generally heavier service is required. Its higher capacities make it ideal for use in applications involving high torque loads due to sudden reversals, web jams, or high inertia.

Like HDF gearing, Harmonic Drive heavy-duty HDR gearing offers machine designers a very compact, yet simple means of achieving high ratio speed reduction or of phasing differentials.

Backlash

Compared to most other forms of high-ratio gearing, HDR exhibits very low backlash — typically in the 10 to 35 arc minute range. Because Harmonic Drive pancake gearing lacks the natural preload found in Harmonic Drive cup type gearing, HDR does not have zero backlash. For a more detailed discussion of backlash, see Page 2 of the "Cup and Pancake Component Gear Sets" brochure.

© 1990 Harmonic Drive

HARMONIC DRIVE TECHNOLOGIES IS THE ORIGINAL MANUFACTURER OF HARMONIC DRIVE GEARING.

Harmonic Drive gearing was developed over 30 years ago primarily for use in aerospace applications where performance and reliability were required and where space and weight savings were of paramount importance.

Harmonic Drive gearing has since become popular for a wide range of precision control applications. Its high torque capacity, low or zero backlash, high single-stage ratios, and compact, in-line configuration make it the logical choice where precise motion control or positioning accuracy are required — applications such as machine tool drive mechanisms, valve actuators, web tensioning and roll registration differential drives, servo actuator transmissions for robots, positioning drives for medical X-ray and diagnostic equipment, antenna positioners, phototypesetters, computer peripherals, and a long and varied list of other applications.

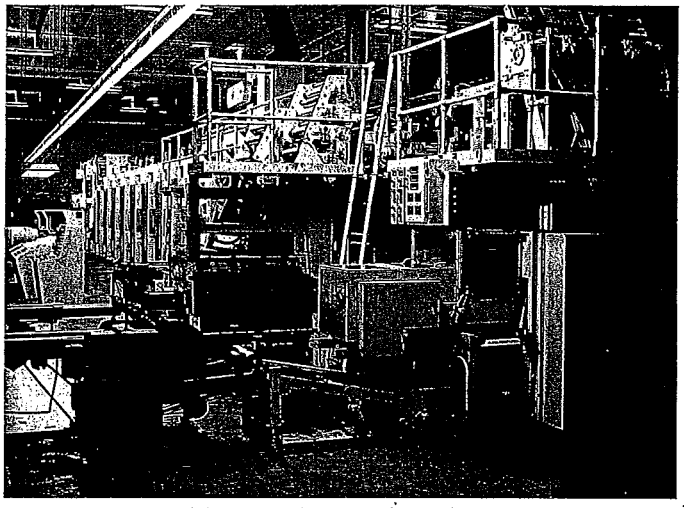

Continuous Duty/No Downtime — when it has to stand up.

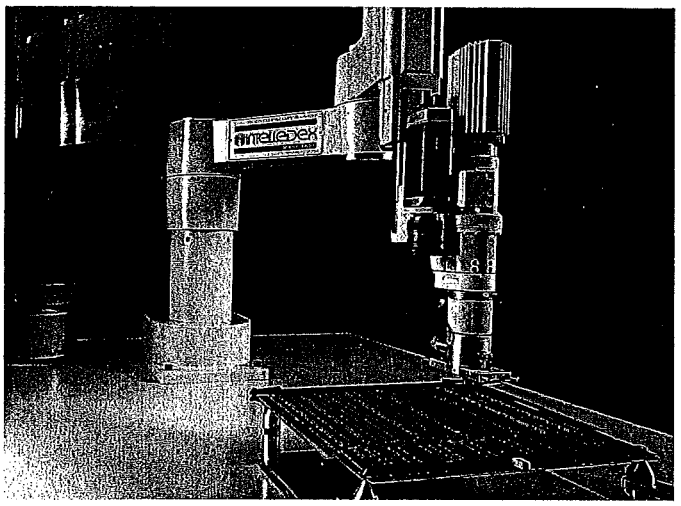

Precision and Repeatability — when it has to drive precisely.

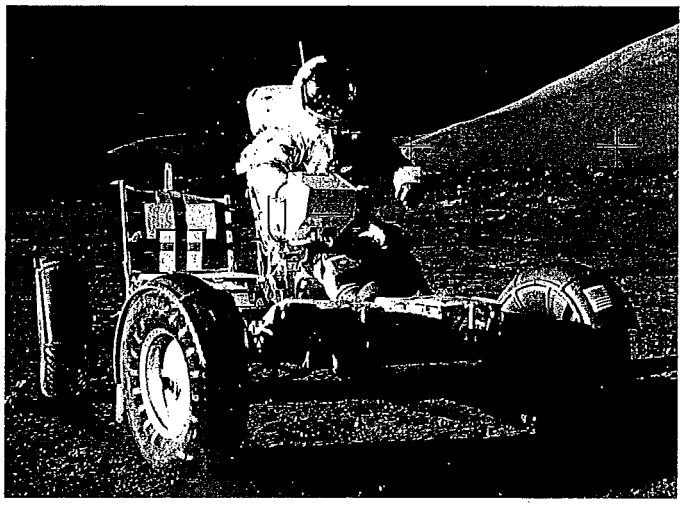

High Reliability — when it has to work.

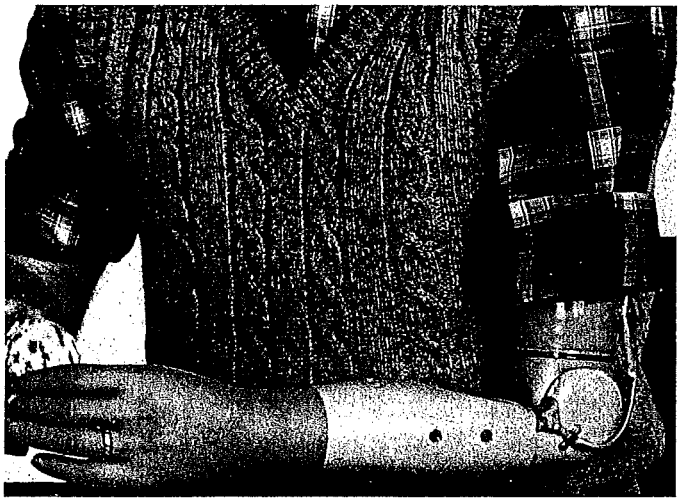

Compactness — when it has to fit into a small space.

Harmonic Drive™ TECHNOLOGIES

HD 0039

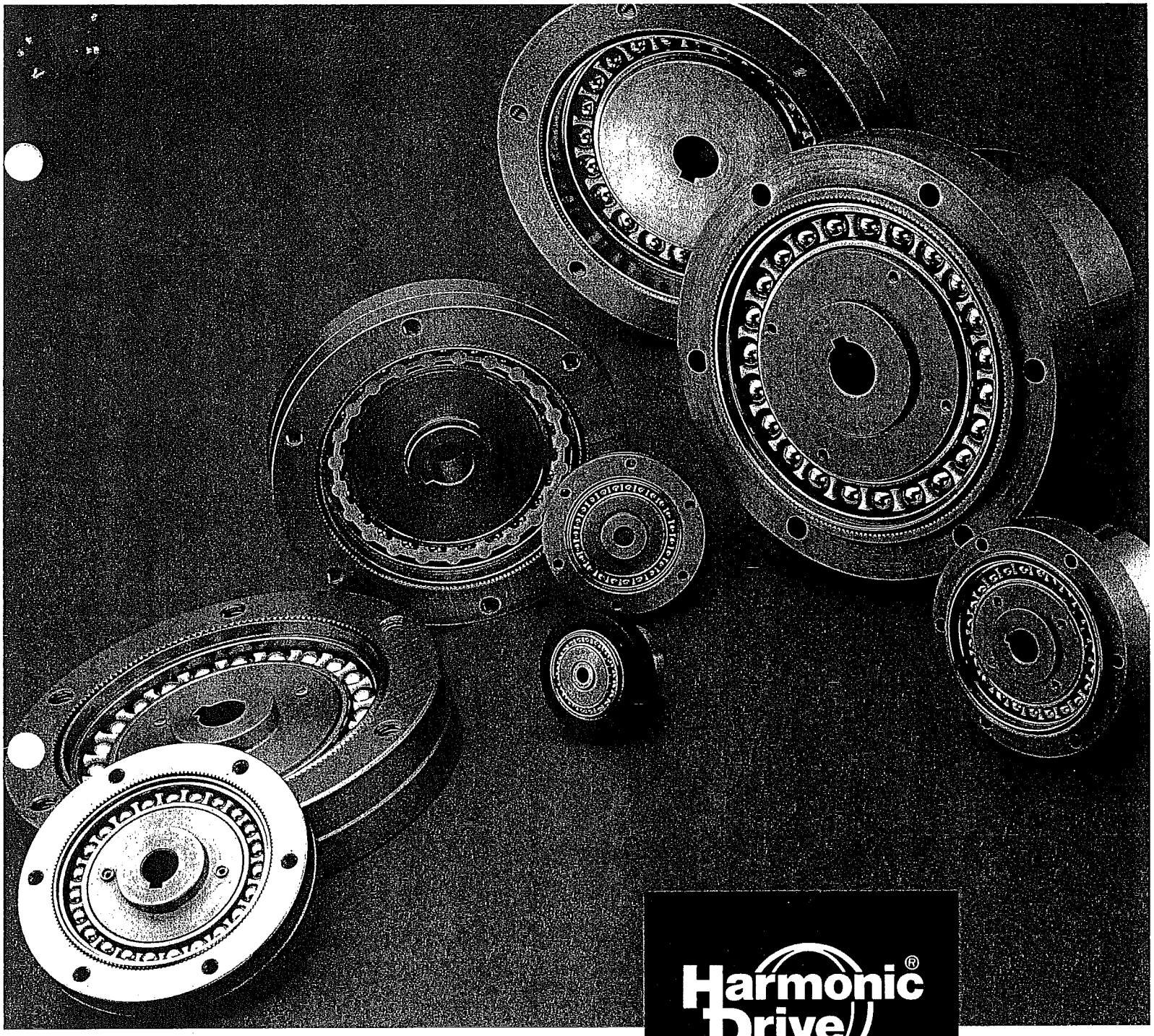

Harmonic® Drive

CUP and PANCAKE COMPONENT GEAR SETS

HD 0040

The Advantages of Harmonic Drive Gearing

Because it consists of only three simple parts, Harmonic Drive gearing offers design engineers the freedom to integrate drive components directly into machines or equipment. Harmonic Drive is a pure torque couple with all concentric elements and requires less space and less bulky support structures than conventional gearing.

Harmonic Drive's precision and performance are ideal in applications requiring accurate positioning or precise motion control.

Low or Zero Backlash
Natural gear preload and almost pure radial tooth engagement allow standard Harmonic Drive gearing to operate with essentially zero backlash for the entire gear life without preload adjustments or significant wear.

Efficiencies as High as 90%
Measured on actual shaft-to-shaft losses rather than tooth losses (as with other gearing), standard Harmonic Drive gearing efficiencies are normally in the 80 – 90% range.

Simple Support Requirements
Since torque is transmitted by pure couple, Harmonic Drive gearing does not generate radial loads and, therefore, can be used with much simpler bearings and less structural support than other forms of gearing.

HDC CUP COMPONENT GEAR SET

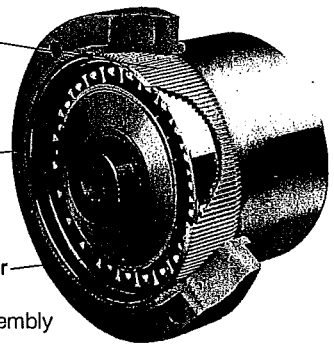

High Single-Stage Ratios From 50:1 Up
Depending on size, Harmonic Drive products offer ratios from 50:1 (60:1 for standard products) to as high as 320:1. Using compound drives, much higher ratios can be achieved.

Torque Equal to Drives Twice as Large
Pound for pound, no other mechanical power transmission can compare with Harmonic Drive gearing for torque capacity.

Excellent Positional Accuracy and Repeatability
Harmonic Drive gearing's design ensures that approximately 10% of the total teeth are engaged at any point in time, minimizing the effect of tooth-to-tooth error. Accuracies as fine as 30 arc seconds are achievable in some sizes. Repeatabilities are in the arc second range.

Design Flexibility
Harmonic Drive gearing allows designers multiple input/output possibilities in speed reduction and speed increasing applications. Concentric shafting makes it ideal for differential designs.

Long Life and High Reliability
Proven in years of industrial, military, and other applications, Harmonic Drive gearing has an average life of over 15,000 hours at rated loads. In addition, the tooth mesh is unaffected by the impact of stepping motors or frequent starts, stops, and reversals.

Principle of Operation

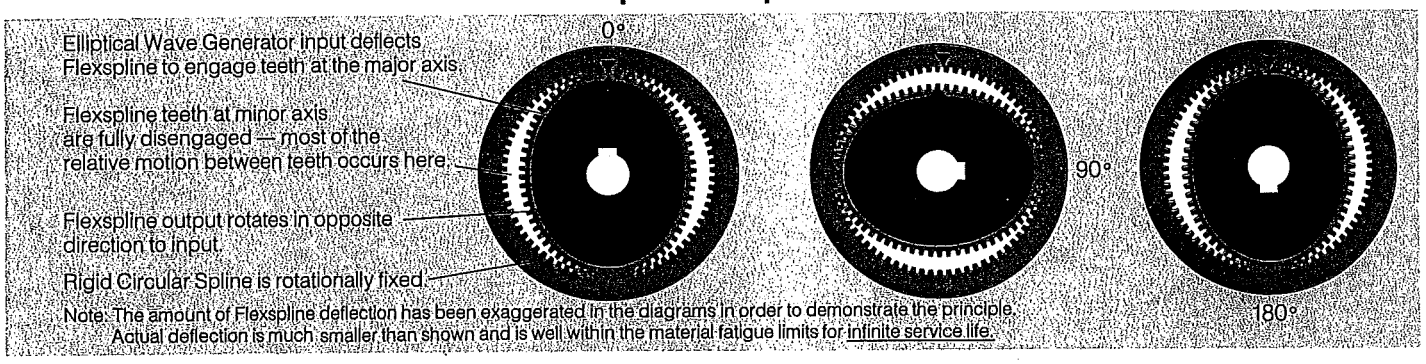

The teeth on the nonrigid Flexspline and the rigid Circular Spline are in continuous engagement. Since the Flexspline has two teeth fewer than the Circular Spline, one revolution of the input causes relative motion between the Flexspline and the Circular Spline equal to two teeth. With the Circular Spline rotationally fixed, the Flexspline rotates in the opposite direction to the input at a reduction ratio equal to one-half the number of teeth on the Flexspline.

This relative rotation may be seen by examining the motion of a single Flexspline tooth over one-half an input revolution. The tooth is fully engaged when the major axis of the Wave Generator input is at 0°. When the Wave Generator's major axis rotates to 90°, the tooth is fully disengaged. Full reengagement occurs in the adjacent Circular Spline tooth space when the major axis is rotated to 180°. This motion repeats as the major axis rotates another 180° back to 0°, thereby producing the two tooth advancement per input revolution.

All tabulated Harmonic Drive gear reduction ratios assume output through the Flexspline with the Circular Spline rotationally fixed.

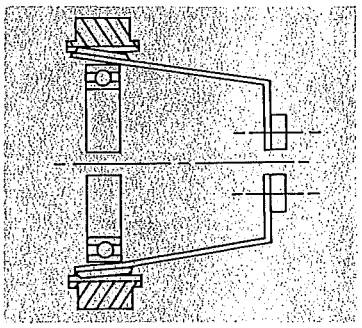

However, any drive element may function as the input, output, or fixed member.

Zero Backlash
All Harmonic Drive cup-type gearing products have zero backlash at the gear mesh.

Under most circumstances, this zero backlash lasts beyond the expected life of the drive. This unusual characteristic is due to the unconventional tooth path combined with a slight cone angling of the teeth caused by deflection of the cup walls. Together, these factors produce preload and ensure very little sliding and no relative motion between teeth at the points where most of the torque is transferred.

While a small amount of backlash occurs at the oldham input coupling, because of the high ratios involved, this backlash becomes negligible when measured at the output. Even this backlash can be eliminated by coupling directly to the Wave Generator. Please consult the factory for methods and guidelines.

© 1989 Harmonic Drive

Input/Output Versatility

1.
Speed Reducer: Circular Spline stationary. Wave Generator input. Flexspline output. Ratio as tabulated.

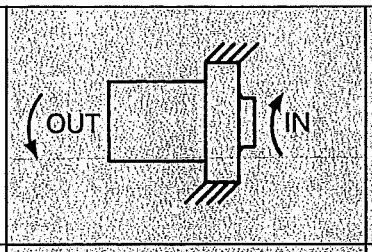

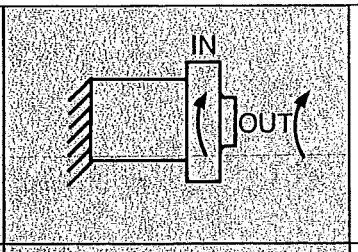

4.
Speed Increaser: Flexspline stationary. Circular Spline input. Wave Generator output. Ratio as tabulated plus 1.

2.
Speed Increaser: Circular Spline stationary. Flexspline input. Wave Generator output. Ratio as tabulated.

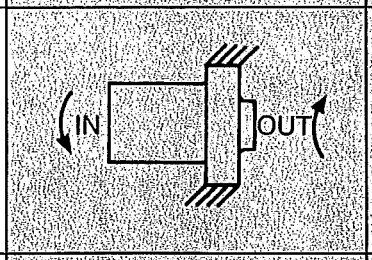

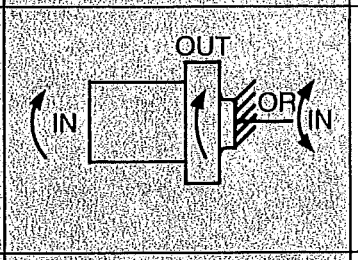

5.
Speed Reducer/Differential: Wave Generator stationary. Flexspline input. Circular Spline output.

$$\text{Ratio} = \frac{\text{Tabulated Ratio}}{\text{Tabulated Ratio} + 1}$$

3.
Speed Reducer: Flexspline stationary. Wave Generator input. Circular Spline output. Ratio as tabulated plus 1.

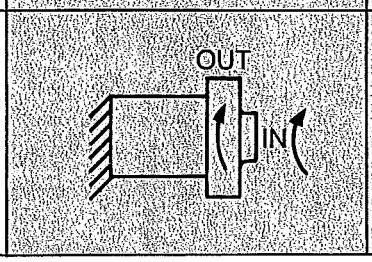

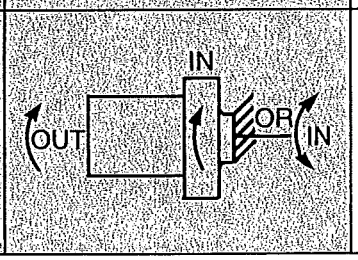

6.
Speed Increaser/Differential: Wave Generator stationary. Circular Spline input. Flexspline output.

$$\text{Ratio} = \frac{\text{Tabulated Ratio} + 1}{\text{Tabulated Ratio}}$$

Installed Relationship

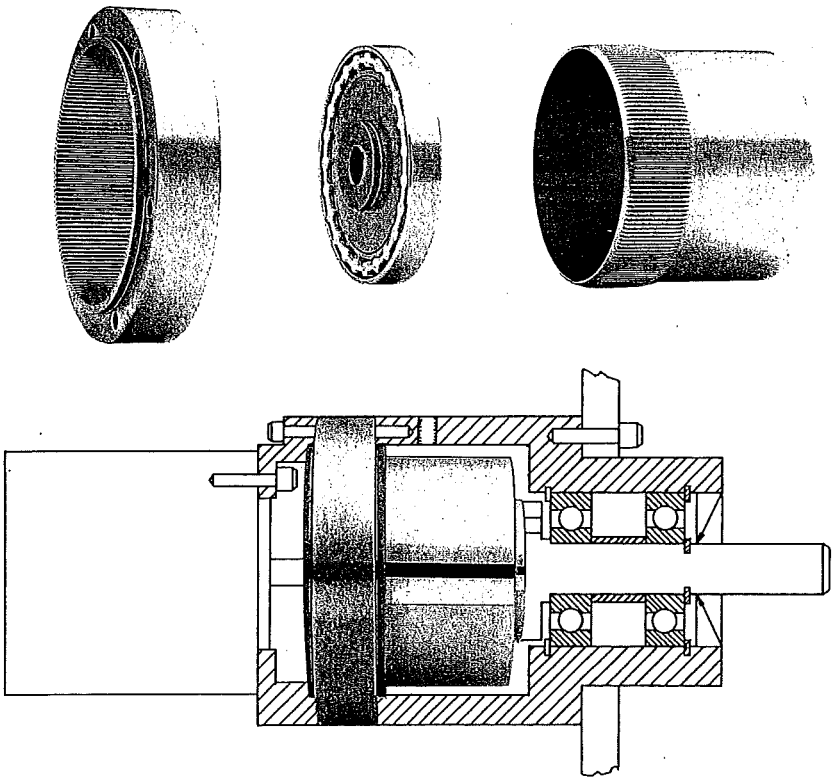

Cup Efficiencies

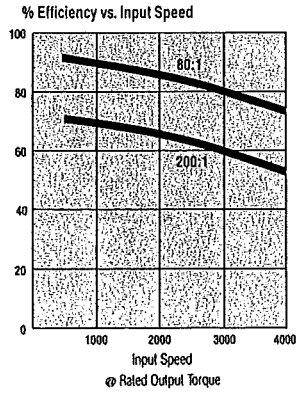

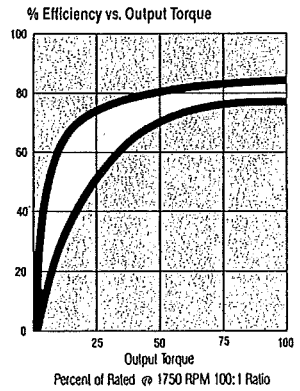

Dimensions Inches (mm)

HDC Size	A Circular Spline OD	B Overall Length	C Circular Spline Width	D Number of Circular Spline Holes	E Wave Generator Hub ID	F Flexspline Pilot Diameter	G Number of Flexspline Holes	H Flexspline Hub OD	Weight lbs (kg)
10	1.480 (37.59)	1.095 (27.81)	0.280 (7.11)	4	0.188 (4.78)	0.313 (7.95)	—	0.560 (14.22)	0.170 (0.08)
1C	2.000 (50.80)	1.410 (35.81)	0.380 (9.65)	6	0.250 (6.35)	0.437 (11.10)	6	0.830 (21.08)	0.300 (0.14)
3C	2.630 (66.80)	1.880 (47.75)	0.500 (12.70)	6	0.375 (9.53)	0.626 (15.90)	6	1.240 (31.50)	0.628 (0.28)
5C	3.280 (83.31)	2.310 (58.67)	0.630 (16.00)	6	0.500 (12.70)	0.781 (19.84)	6	1.550 (39.37)	1.200 (0.54)
1M	4.250 (107.95)	2.960 (75.18)	0.810 (20.57)	6	0.500 (12.70)	1.063 (27.00)	6	2.000 (50.80)	2.600 (1.18)
2M	5.250 (133.35)	3.640 (92.46)	1.000 (25.40)	6	0.625 (15.88)	1.281 (32.54)	6	2.500 (63.50)	5.100 (2.31)
4M	6.630 (168.40)	4.450 (113.03)	1.090 (27.69)	6	0.625 (15.88)	1.625 (41.28)	6	3.120 (79.25)	9.000 (4.08)
8M	8.630 (219.20)	5.790 (147.07)	1.440 (36.58)	6	0.875 (22.23)	2.094 (53.19)	6	4.000 (101.60)	20.300 (9.21)
15M	10.630 (270.00)	7.190 (182.63)	1.880 (47.75)	8	1.125 (28.58)	2.563 (65.10)	6	5.000 (127.00)	38.600 (17.51)

NOTE: Dimensions are for reference only. Required specification prints furnished on request. It is recommended that our engineering staff be given the opportunity to review application approaches since the full extent of design options is more than can be conveniently described in this brochure.

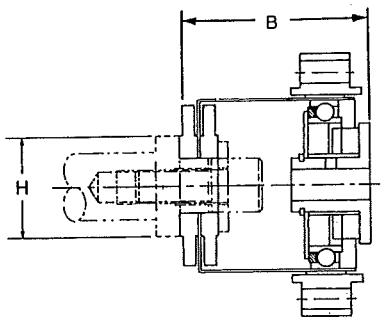

HDC 10

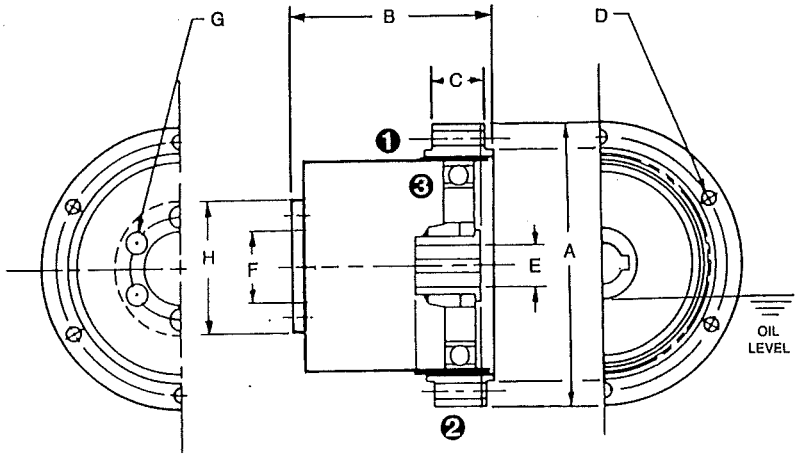

HDC 1C — 15M

❶ FLEXSPLINE ❷ CIRCULAR SPLINE ❸ WAVE GENERATOR

Ratings Table[1]

HDC SIZE	PITCH DIA. IN.	RATIO[3]	NO-LOAD STARTING TORQUE (TYP.) oz-in (Ncm)	MAX INPUT RPM (Oil)	STD. W/G INPUT INERTIA lb-in² (kg-cm²)	INPUT 3500 RPM I/P H.P.	O/P SPEED	OUTPUT TORQUE lb-in	Nm
10	**1.0**	**60**	0.6 (0.4)	15,000	.003 (.009)	0.02	58.3	25	2.8
		80				0.02	43.8	26	2.9
1C	**1.4**	**60**	1.0 (0.7)	12,000	.011 (.032)	0.06	58.3	81	9.2
		72				0.06	48.6	81	9.2
		80				0.06	43.8	81	9.2
		100				0.05	35.0	81	9.2
3C	**2.0**	**60**	2.5 (1.8)	11,200	.058 (.169)	0.22	58.3	280	31.6
		80				0.20	43.8	280	31.6
		100				0.16	35.0	300	33.9
		120				0.14	29.2	300	33.9
		140				0.12	25.0	300	33.9
		160				0.11	21.9	300	33.9
5C	**2.5**	**60**	5.0 (3.5)	9,000	.165 (.481)	0.38	58.3	490	55.4
		80				0.34	43.8	490	55.4
		100				0.28	35.0	490	55.4
		120				0.24	29.2	490	55.4
		140				0.21	25.0	490	55.4
		160				0.19	21.9	490	55.4
		180				0.18	19.4	490	55.4
		200				0.16	17.5	490	55.4
1M	**3.2**	**60**	11.0 (7.8)	7,000	.610 (1.779)	0.77	58.3	990	111.9
		80				0.70	43.8	990	111.9
		100				0.57	35.0	990	111.9
		120				0.50	29.2	990	111.9
		140				0.44	25.0	990	111.9
		160				0.39	21.9	990	111.9
		180				0.36	19.4	990	111.9
		200				0.33	17.5	990	111.9
2M	**4.0**	**60**	20.0 (14.1)	5,600	1.750 (5.104)	1.62	58.3	1,645	185.9
		80				1.38	43.8	1,645	185.9
		100				1.23	35.0	2,070	233.9
		120				1.07	29.2	2,070	233.9
		140				0.94	25.0	2,070	233.9
		160				0.84	21.9	2,070	233.9
		180				0.77	19.4	2,070	233.9
		200				0.71	17.5	2,070	233.9
4M	**5.0**	**60**	40.0 (28.3)	4,500	5.060 (14.758)	3.03	58.3	3,085	348.6
		80				2.59	43.8	3,085	348.6
		100				2.26	35.0	3,855	435.6
		120				1.96	29.2	3,855	435.6
		140				1.72	25.0	3,855	435.6
		160				1.55	21.9	3,855	435.6
		180				1.41	19.4	3,855	435.6
		200				1.31	17.5	3,855	435.6
8M	**6.5**	**60**	88.0 (92.1)	3,500	19.600 (57.167)	5.55	58.3	6,260	707.4
		80				4.74	43.8	6,260	707.4
		100				4.11	35.0	7,150[4]	808.0[4]
		120				3.56	29.2	7,150[4]	808.0[4]
		140				3.13	25.0	7,150[4]	808.0[4]
		160				2.82	21.9	7,150[4]	808.0[4]
		180				2.57	19.4	7,150[4]	808.0[4]
		200				2.38	17.5	7,150[4]	808.0[4]
15M	**8.0**	**60**	160.0 (113.0)	2,800	51.500 (150.208)				
		80							
		100							
		120							
		140							
		160							
		180							
		200							

NOTES:
1) Output Torque ratings are based on a B-10 Life of 3000 hours.
2) Repetitive momentary or continuous running load not to exceed Maximum Output Torque rating.

INPUT 1750 RPM				INPUT 1000 RPM				INPUT 500 RPM			MAXIMUM OUTPUT TORQUE[2]		STATIC TORQUE LIMIT		RATCHET TORQUE LIMIT	
I/P H.P.	O/P SPEED	OUTPUT TORQUE lb-in	OUTPUT TORQUE Nm	I/P H.P.	O/P SPEED	OUTPUT TORQUE lb-in	OUTPUT TORQUE Nm	O/P SPEED	OUTPUT TORQUE lb-in	OUTPUT TORQUE Nm	lb-in	Nm	lb-in	Nm	lb-in	Nm
0.01	29.2	30	3.4	0.01	19.2	30	3.4	8.3	30	3.4	30	3.4	50	5.7	50	5.7
0.01	21.9	40	4.5	0.01	14.4	40	4.5	6.3	40	4.5	40	4.5	70	7.9	80	9.0
0.04	29.2	102	11.5	0.03	19.2	119	13.4	8.3	119	13.4	119	13.4	202	22.8	140	15.8
0.04	24.3	102	11.5	0.03	16.0	119	13.4	6.9	119	13.4	119	13.4	202	22.8	200	22.6
0.03	21.9	102	11.5	0.02	14.4	125	14.1	6.3	140	15.8	140	15.8	238	26.9	200	22.6
0.03	17.5	102	11.5	0.01	11.5	125	14.1	5.0	155	17.5	180*	20.3*	306	34.6	200	22.6
0.15	29.2	355	40.1	0.10	19.2	430	48.6	8.3	470	53.1	470	53.1	1,280	144.6	1,120	126.6
0.12	21.9	355	40.1	0.08	14.4	430	48.6	6.3	470	53.1	470	53.1	1,240	140.1	1,260	142.4
0.11	17.5	375	42.4	0.07	11.5	450	50.9	5.0	570	64.4	690	78.0	1,620	183.1	1,260	142.4
0.09	14.6	375	42.4	0.07	9.6	450	50.9	4.2	570	64.4	900	101.7	1,970	222.6	1,260	142.4
0.08	12.5	375	42.4	0.06	8.2	450	50.9	3.6	570	64.4	1,120*	126.6*	2,250	254.3	1,120	126.6
0.07	10.9	375	42.4	0.05	7.2	450	50.9	3.1	570	64.4	1,120*	126.6*	2,480	280.2	1,120	126.6
0.27	29.2	620	70.1	0.19	19.2	750	84.8	8.3	830	93.8	830	93.8	2,570	290.4	1,580	178.5
0.21	21.9	620	70.1	0.15	14.4	750	84.8	6.3	830	93.8	830	93.8	2,310	261.0	2,050	231.7
0.18	17.5	620	70.1	0.14	11.5	750	84.8	5.0	940	106.2	1,240	140.1	3,050	344.7	2,050	231.7
0.16	14.6	620	70.1	0.12	9.5	750	84.8	4.2	940	106.2	1,690	191.0	3,800	429.4	2,050	231.7
0.14	12.5	620	70.1	0.10	8.2	750	84.8	3.6	940	106.2	1,900	214.7*	4,270	482.5	2,050	231.7
0.12	10.9	620	70.1	0.09	7.2	750	84.8	3.1	940	106.2	1,700	192.1*	4,650	525.5	1,900	214.7
0.11	9.7	620	70.1	0.08	6.4	750	84.8	2.8	940	106.2	1,580*	178.5*	5,060	571.8	1,580	178.5
0.10	8.8	620	70.1	0.06	5.8	750	84.8	2.5	940	106.2	1,580*	178.5*	5,320	601.2	1,580	178.5
0.54	29.2	1,245	140.7	0.38	19.2	1,500	169.5	8.3	1,830	206.8	1,830	206.8	4,920	556.0	4,000	452.0
0.41	21.0	1,245	140.7	0.29	14.4	1,500	169.5	6.3	1,830	206.8	1,830	206.8	4,520	510.8	5,000	565.0
0.36	17.5	1,245	140.7	0.27	11.5	1,500	169.5	5.0	1,890	213.6	2,640	298.3	5,800	655.4	5,000	565.0
0.31	14.6	1,245	140.7	0.23	9.6	1,500	169.5	4.2	1,890	213.6	3,410	385.3	7,220	815.9	5,000	565.0
0.27	12.5	1,245	140.7	0.21	8.2	1,500	169.5	3.6	1,890	213.6	4,700*	531.1*	8,270	934.5	4,700	531.1
0.24	10.9	1,245	140.7	0.18	7.2	1,500	169.5	3.1	1,890	213.6	4,700*	531.1*	9,190	1038.5	4,700	531.1
0.22	9.7	1,245	140.7	0.17	6.4	1,500	169.5	2.8	1,890	213.6	4,000*	452.0*	9,950	1124.4	4,000	452.0
0.21	8.8	1,245	140.7	0.16	5.8	1,500	169.5	2.5	1,890	213.6	4,000*	452.0*	10,610	1198.9	4,000	452.0
0.90	29.2	2,075	234.5	0.59	19.2	2,500	282.5	8.3	2,760	311.9	2,760	311.9	7,330	828.3	6,600	745.8
0.85	21.0	2,075	234.5	0.45	14.4	2,500	282.5	6.3	2,760	311.9	2,760	311.9	6,980	788.7	9,000	1017.0
0.75	17.5	2,610	294.9	0.52	11.5	3,145	355.4	5.0	3,960	447.5	4,070	459.9	9,450	1067.9	9,000	1017.0
0.65	14.6	2,610	294.9	0.49	9.6	3,145	355.4	4.2	3,960	447.5	5,060	571.8	11,120	1256.6	8,300	937.9
0.57	12.5	2,610	294.9	0.43	8.2	3,145	355.4	3.6	3,960	447.5	6,130	692.7	13,150	1486.0	8,300	937.9
0.51	10.9	2,610	294.9	0.38	7.2	3,145	355.4	3.1	3,960	447.5	7,200	813.6	14,640	1654.3	7,200	813.6
0.47	9.7	2,610	294.9	0.35	6.4	3,145	355.4	2.8	3,960	447.5	6,600*	745.8*	15,790	1784.3	6,600	745.8
0.44	8.8	2,610	294.9	0.33	5.8	3,145	355.4	2.5	3,960	447.5	6,600*	745.8*	17,010	1922.1	6,600	745.8
1.69	29.2	3,890	439.6	1.11	19.2	4,690	530.0	8.3	5,110	577.4	5,110	577.4	13,910	1571.8	15,500	1751.5
1.34	21.9	3,890	439.6	0.85	14.4	4,690	530.0	6.3	5,110	577.4	5,110	577.4	13,060	1475.8	19,000	2147.0
1.29	17.5	4,860	549.2	0.93	11.5	5,860	662.2	5.0	6,500	734.5	6,500	734.5	16,860	1905.2	19,000	2147.0
1.21	14.6	4,860	549.2	0.92	9.6	5,860	662.2	4.2	7,375	833.4	9,500	1073.5	20,900	2361.7	17,000	1921.0
1.07	12.5	4,860	549.2	0.80	8.2	5,860	662.2	3.6	7,375	833.4	11,200	1265.6	24,150	2729.0	17,500	1921.0
0.96	10.9	4,860	549.2	0.72	7.2	5,860	662.2	3.1	7,375	833.4	13,100	1480.3	26,830	3031.8	17,000	1921.0
0.88	9.7	4,860	549.2	0.66	6.4	5,860	662.2	2.8	7,375	833.4	15,500*	1751.5*	28,830	3257.8	15,500	1751.5
0.82	8.8	4,860	549.2	0.62	5.8	5,860	662.2	2.5	7,375	833.4	15,500*	1751.5*	31,190	3524.5	15,500	1751.5
3.42	29.2	7,885	891.0	2.25	19.2	9,500	1073.5	8.3	10,200	1152.6	10,200	1152.6	27,750	3135.8	24,000	2712.0
2.63	21.9	7,885	891.0	1.73	14.4	9,500	1073.5	6.3	10,200	1152.6	10,200	1152.6	26,350	2977.6	30,000	3390.0
2.54	17.5	9,010	1018.1	1.96	11.5	10,860	1227.2	5.0	13,680	1545.8	15,300	1728.9	36,130	4082.7	30,000	3390.0
2.26	14.6	9,010	1018.1	1.70	9.6	10,860	1227.2	4.2	13,680	1545.8	19,300	2180.9	42,370	4787.8	27,000	3051.0
1.98	12.5	9,010	1018.1	1.50	8.2	10,860	1227.2	3.6	13,680	1545.8	23,000	2599.0	49,400	5582.2	27,000	3051.0
1.78	10.9	9,010	1018.1	1.34	7.2	10,860	1227.2	3.1	13,680	1545.8	26,600	3005.8	54,510	6159.6	24,000	2712.0
1.62	9.7	9,010	1018.1	1.23	6.4	10,860	1227.2	2.8	13,680	1545.8	24,000*	2712.0*	59,210	6690.7	24,000	2712.0
1.52	8.8	9,010	1018.1	1.14	5.8	10,860	1227.2	2.5	13,680	1545.8	24,000*	2712.0*	64,040	7236.5	24,000	2712.0
5.96	29.2	13,715	1549.8	3.92	19.2	16,530	1867.9	8.3	18,200	2056.6	18,200	2056.6	48,040	5428.5	50,000	5650.0
4.57	21.9	13,715	1549.8	3.00	14.4	16,530	1867.9	6.3	18,200	2056.6	18,200	2056.6	45,640	5157.3	65,000	7345.0
5.14	17.5	17,780	2009.1	3.41	11.5	21,425	2421.0	5.0	26,000	2938.0	26,000	2938.0	61,800	6983.4	65,000	7345.0
4.45	14.6	17,780	2009.1	3.42	9.6	21,425	2421.0	4.2	26,995	3050.4	33,600	3976.8	74,500	8418.5	60,000	6780.0
3.91	12.5	17,780	2009.1	2.99	8.2	21,425	2421.0	3.6	26,995	3050.4	40,800	4610.4	87,870	9929.3	60,000	6780.0
3.51	10.9	17,780	2009.1	2.70	7.2	21,425	2421.0	3.1	26,995	3050.4	47,900	5412.7	98,830	8907.8	55,000	6215.0
3.21	9.7	17,780	2009.1	2.47	6.4	21,425	2421.0	2.8	26,995	3050.4	50,000*	5650.0*	107,870	12189.3	50,000	5650.0
2.99	8.8	17,780	2009.1	2.30	5.8	21,425	2421.0	2.5	26,995	3050.4	50,000*	5650.0*	115,180	13015.3	50,000	5650.0

3) Bold Face indicates standard ratios.
4) Thermal Limited. 60% duty cycle recommended with on time not exceeding 30 minutes. Ratings are based on AGMA Service Factor of 1. (See description of Maximum Output Torque in "Limits" section of Page 5.)

*Denotes Maximum Torque Output limited by ratcheting

Limits

Maximum Output Torque
This is the maximum allowable output torque that can be continuously developed with dynamic torque applied through the input.

Static Torque Limit
The static torque limit is the maximum allowable torque that can be applied to the output in a back drive mode with the input Wave Generator locked.

Ratchet Torque Limit
The ratchet torque limit is the maximum output torque to which the drive will react under dynamic overload conditions. Ratcheting, or slippage of one tooth of the Flexspline/Circular Spline gear mesh, is essentially the result of excessive radial deflection of the elements of the drive caused by a torque induced tooth separating load.
Caution: Repeated ratcheting will lead to ultimate drive failure.

Spring Rate

Typical spring rate values for standard units are shown in the accompanying chart. By specifying the K option, the units will be individually tested to ensure that the minimum values are met.
The optimized spring rate values shown are practical upper limits. Spring rates up to these values can be ordered as options. In general, as spring rates increase, no-load starting torque will also rise. Consult the factory for details.

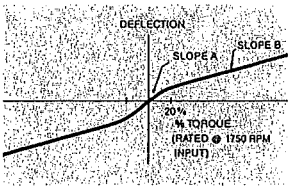

NOTE: Even standard Harmonic Drive spring rate values compare favorably to other power transmission forms in similar ratio ranges.

Typical Torsional Spring Rates
(lb-in/radian)

HDC Size	Slope A Optimized (X 10^6)	Slope A Guaranteed K Min (X 10^6)	Slope B (X 10^6)
10	.005	.003	.012
1C	.015	.008	.040
3C	.048	.023	.120
5C	.110	.045	.234
1M	.250	.092	.515
2M	.480	.184	.960
4M	.900	.345	1.88
8M	2.00	.792	4.12
15M	3.80	1.47	7.68

HD 0044

The Most Axially Compact, Single-Stage, High-Ratio Gearing Available

DYNAMIC CIRCULAR SPLINE:
An internal gear which has the same number of teeth as the Flexspline and which rotates at the same speed and in the same direction as the Flexspline. It is the output element to which an output shaft is connected.

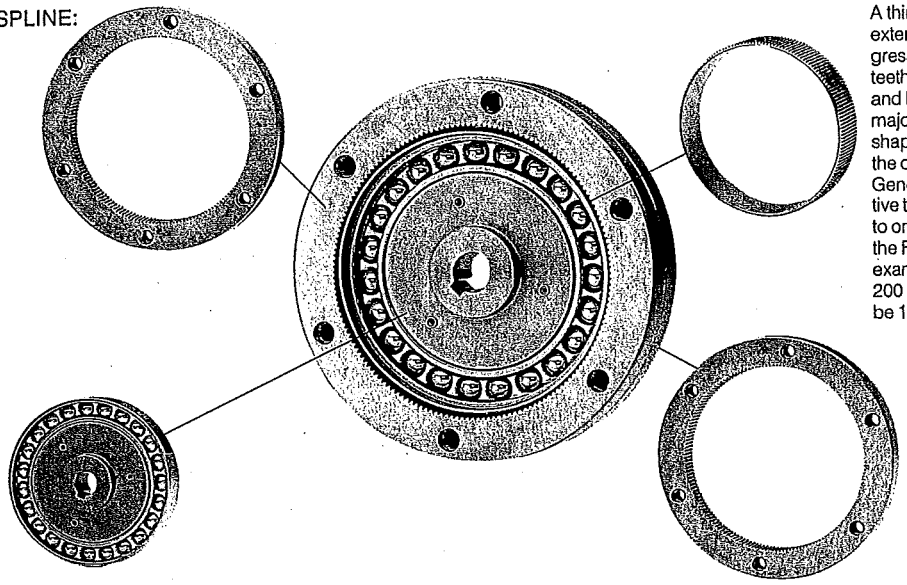

FLEXSPLINE:
A thin-walled steel ring with external spline teeth that progressively engage the internal teeth of the Static Circular Spline and Dynamic Circular Spline at the major axis of its rotating elliptical shape. The Flexspline rotates in the opposite direction of the Wave Generator. Speed reduction relative to the Wave Generator is equal to one-half the number of teeth on the Flexspline's outside edge. For example, if the Flexspline has 200 teeth, the reduction ratio will be 100:1.

WAVE GENERATOR:
An elliptical bearing and the rotating input element of transmission. It is connected to a motor or other input shaft and imparts a rotating elliptical shape to the Flexspline.

STATIC CIRCULAR SPLINE:
A fixed nonrotating internal gear which provides mechanical grounding for the transmission. It has two more teeth than the Flexspline to establish a positive transmission reduction ratio equal to one-half the number of Flexspline teeth.

- Ratios from 80:1 to 160:1 in standard products
- Dual ratios in the same envelope to as high as 40,000:1
- Low backlash

HDF Pancake gearing consists of two Circular Splines which mesh with a common Flexspline to create an extremely axially compact, single-stage gear reduction. The Static Circular Spline turns at the same ratio that it would if it were used in a cup drive, i.e., two teeth, per input revolution. The Dynamic Circular Spline rotates with the Flexspline at a 1:1 ratio and becomes the output member.

HDF Pancake gearing is recommended for light-duty speed reduction and phasing/differential applications. Other Pancake gearing models are available for heavier-duty applications. (See data sheets enclosed in accompanying folder.)

Backlash

Unlike cup component gearing, pancake gearing does exhibit some backlash at the tooth mesh. With pancake gearing, there is no cone angling of the Flexspline teeth as a result of deflection as in cup-type gearing, (see zero-backlash illustration on page 2), therefore, some minor relative motion is possible between teeth during operation. Because pancake gearing consists of two Circular Splines, each with a different number of teeth, clearance must be allowed for meshing with the Flexspline teeth on the same pitch line. Backlash is typically in the 10 to 35 arc minute range.

Installed Relationship

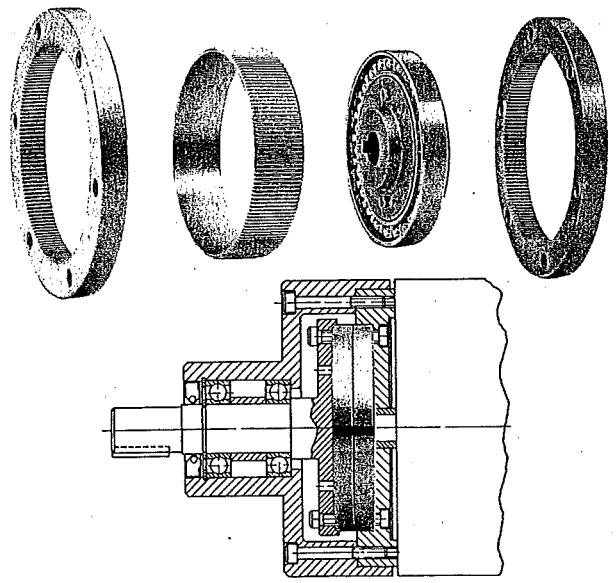

Pancake Efficiencies

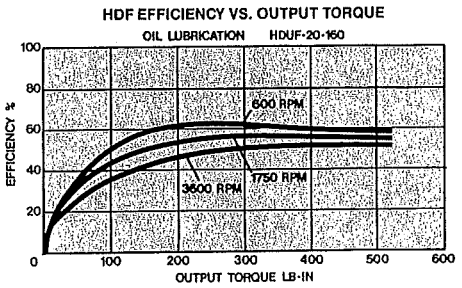

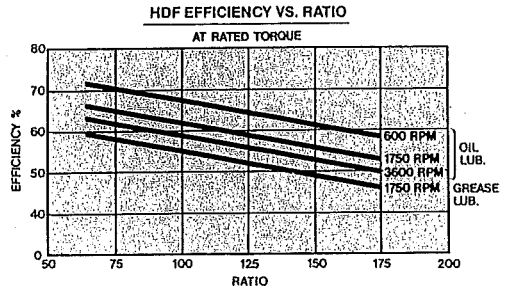

Dimensions (mm)

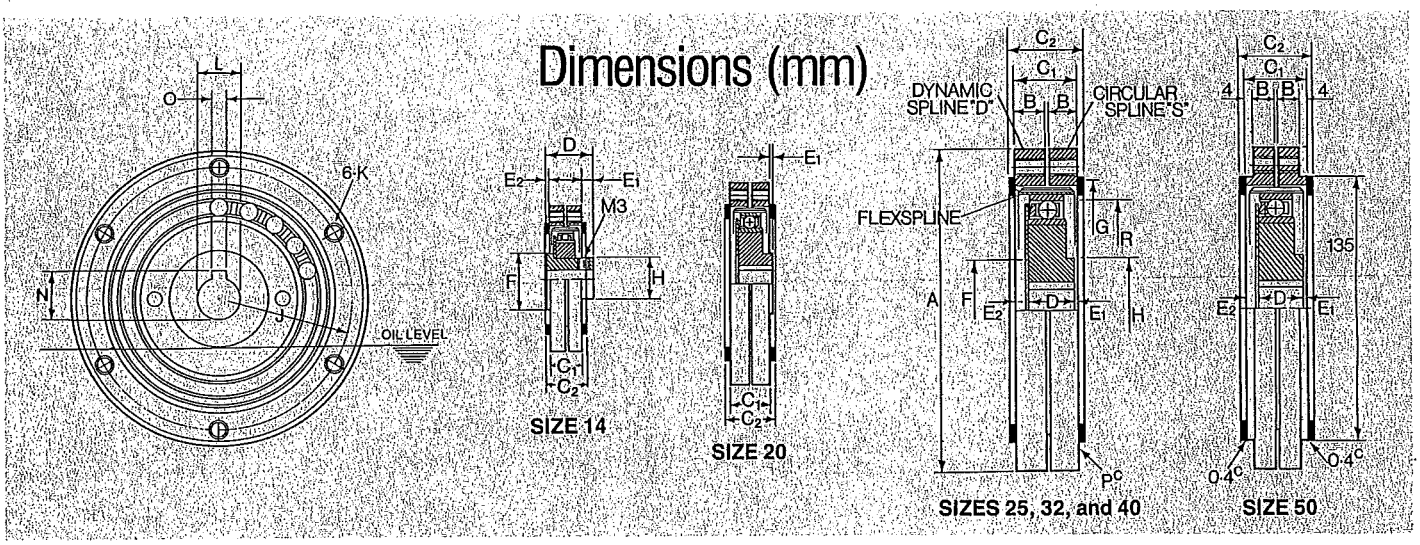

SIZE	A	B	C_1	C_2	D	E_1	E_2	F	G	H	J	K	L	N	O	P	R MAX.	APPROXIMATE WEIGHT LBS.	APPROXIMATE WEIGHT KGS.
14	50	5	10.5	11.4	15*	3.75*	.75*	18*	36	14*	44	M3	6*	—	—	0.2	32	0.2	.091
20	70	6	12.5	14.4	11.4	0.95*	2.05*	20	53	20	60	M4	9	10.4	3	0.2	47	0.7	.318
25	85	8	16.5	18.4	12.8	0.35	3.35	24	66	25	75	M5	11	12.8	4	0.2	59	1.3	.590
32	110	10	20.5	22.4	15.6	0.95	3.95	34	84	36	100	M6	14	16.3	5	0.2	77	2.3	1.043
40	135	13	27.0	30.4	19.4	1.8	5.8	40	103	42	120	M8	14	16.3	5	0.4	95	4.4	1.996
50	170	12	33.0	36.4	23.2	2.9*	6.9*	50	135	54	150	M10	19	21.8	6	0.4	119	7.3	3.311

NOTE: Dimensions are for reference only. Required specification prints furnished on request. It is recommended that our engineering staff be given the opportunity to review application approaches since the full extent of design options is more than can be conveniently described in this brochure.

NOTE: C_2 dimensions include hardened wear washers supplied with pancake gear sets. (See specification prints.)

Ratings Table[1]

HDF SIZE	RATIO[4]	MAXIMUM INPUT RPM Grease	MAXIMUM INPUT RPM Oil	OUTPUT TORQUES @ INPUT RPM 3500 lb-in	3500 Nm	1750 lb-in	1750 Nm	500 lb-in	500 Nm	MAXIMUM OUTPUT TORQUE[3] lb-in	MAXIMUM OUTPUT TORQUE[3] Nm	APPROXIMATE WAVE GENERATOR INERTIA lb-in²	APPROXIMATE WAVE GENERATOR INERTIA Kg-cm²	MAXIMUM BACKLASH (arc min.)
14	80	3500	6000	44	5	56	6	85	10	90	10	0.011	0.033	36
	100			44	5	56	6	85	10	90	10			34
	110			44	5	56	6	85	10	90	10			31
20	80	2200	6000	195	22	246	28	250	28	250	28	0.049	0.144	33
	100			195	22	246	28	300	34	300	34			28
	120			195	22	246	28	350	40	350	40			26
	160			195	22	246	28	370	42	390	44			22
25	80	2000	5000	320	36	406	46	425	48	425	48	0.124	0.362	28
	100			320	36	406	46	600	68	600	68			25
	120			320	36	406	46	615	69	700	79			21
	160			320	36	406	46	615	69	780	88			19
32	80	500	4500	640	72	810	92	950	107	950	107	0.45	1.31	23
	100			640	72	810	92	1200	136	1200	136			20
	120			640	72	810	92	1230	139	1400	158			18
	160			640	72	810	92	1230	139	1550	175			15
40	80	1250	4500	1350	153	1705	193	1700	192	1700	192	1.17	3.43	23
	100			1350	153	1705	193	2400	271	2400	271			18
	120			1350	153	1705	193	2585	292	2700	305			16
	160			1350	153	1705	193	2585	292	3100	350			11
50	80	1000	3500	2525	285	3180	359	3100	350	3100	350	3.39	9.89	16
	100			2525	285	3180	359	4200	475	4200	475			16
	120			2525	285	3180	359	4825	545	5200	588			14
	160			2525	285	3180	359	4825	545	5800	655			8

NOTES: 1) Output Torques based on B-10 Life of 3000 hours.
2) Thermal limited. 50% duty cycle recommended with on time not exceeding 15 minutes.
3) This torque is not to be exceeded under any circumstances including momentary overload.
4) Consult factory for special high ratios up to approximately 40,000:1.

HARMONIC DRIVE APPLICATION CONSIDERATIONS

Harmonic Drive gearing, as presented in this brochure, is available in two different component configurations — cup and pancake. The selection of configuration depends on the application for which the gearing is to be used.

In certain applications where these considerations are important, both cup and pancake Harmonic Drive gearing components offer advantages over spur, helical, or worm gearing. However, in choosing the best product for an application, the designer should be aware of the trade-offs involved. While pancake components provide the advantages of smaller size, lighter weight, and lower cost, these advantages may be offset by the improved accuracy, zero backlash, higher efficiency, and simpler mounting requirements of cup components.

The chart below provides a comparison of cup (HDC) and pancake (HDF) components for each of the application considerations.

Selection Factor	Cup	Pancake
High ratio	1	1
Compactness	2	1
Low backlash	1	2
Spring rate	1	1
Accuracy	1	2
Life expectancy	1	2
Torque vs. weight and size	1	2
Efficiency	1	2
Ability to withstand frequent stops, starts, and reversals	1	2
Mounting simplicity	1	2
Cost	2	1

Legend: 1 = First Choice 2 = Second Choice

NOTE: Where a "1" appears on both types, the choice depends on the specific application.

The above data is for informational purposes only. Proper selection of components depends on a thorough analysis of the application. A Harmonic Drive field or application engineer will be happy to assist you in selecting the proper component configuration and drive arrangement for your specific application.

Harmonic Drive
A Division of Quincy Technologies, Inc.
51 Armory Street, Wakefield, MA 01880 USA
TEL: (617) 245-7802
FAX: (617) 246-4944 TELEX: 94-9442

Form HDC/HDF 12/89 25M

HD 0047

Printed in U.S.A

HARMONIC DRIVE®, A DIVISION OF QUINCY TECHNOLOGIES, INC., IS THE ORIGINAL MANUFACTURER OF HARMONIC DRIVE GEARING.

Harmonic Drive gearing was developed over 30 years ago primarily for use in aerospace applications where performance and reliability were required and where space and weight savings were of paramount importance.

Harmonic Drive gearing has since become popular for a wide range of precision control applications. Its high torque capacity, low or zero backlash, high single-stage ratios, and compact, in-line configuration make it the logical choice where precise motion control or positioning accuracy are required — applications such as machine tool drive mechanisms, valve actuators, web tensioning and roll registration differential drives, servo actuator transmissions for robots, positioning drives for medical X-ray and diagnostic equipment, antenna positioners, phototypesetters, computer peripherals, and a long and varied list of other applications.

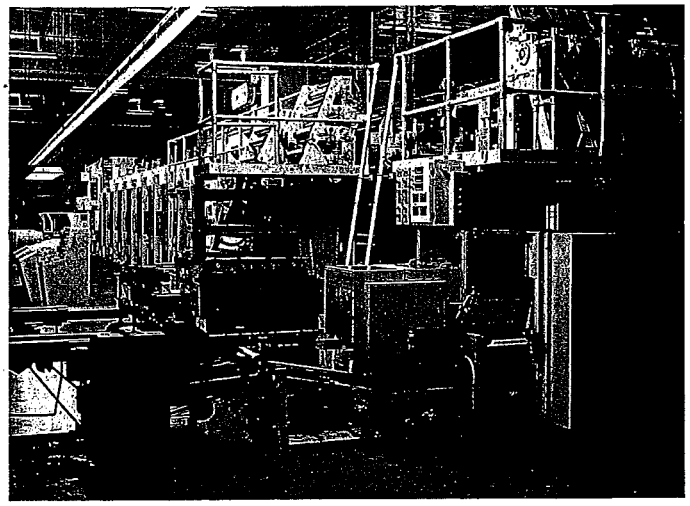

Continuous Duty/No Downtime — when it has to stand up.

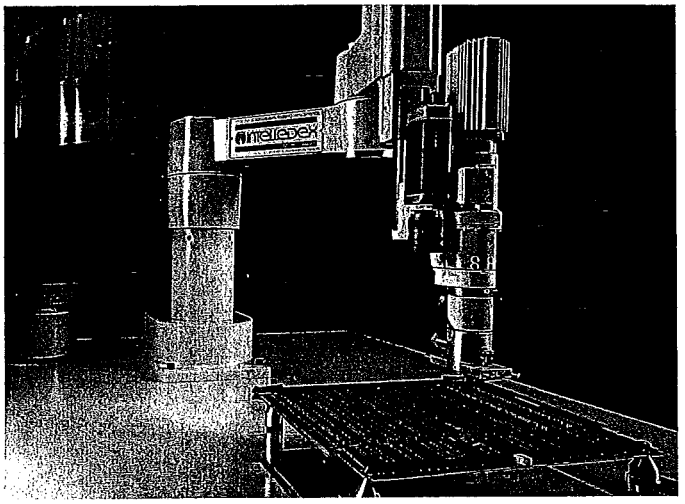

Precision and Repeatability — when it has to drive precisely.

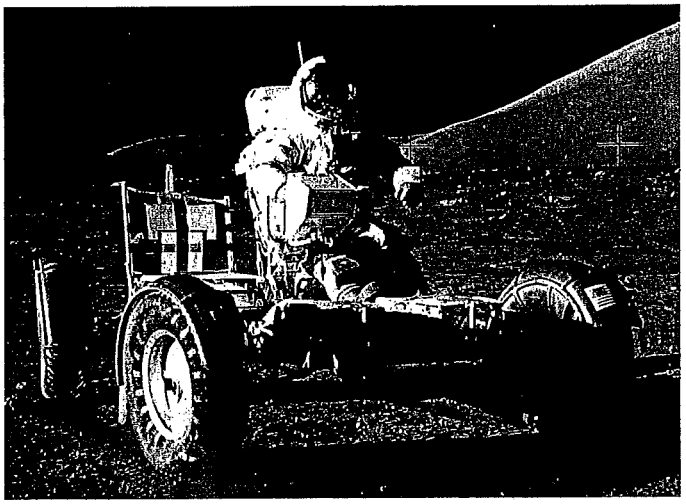

High Reliability — when it has to work.

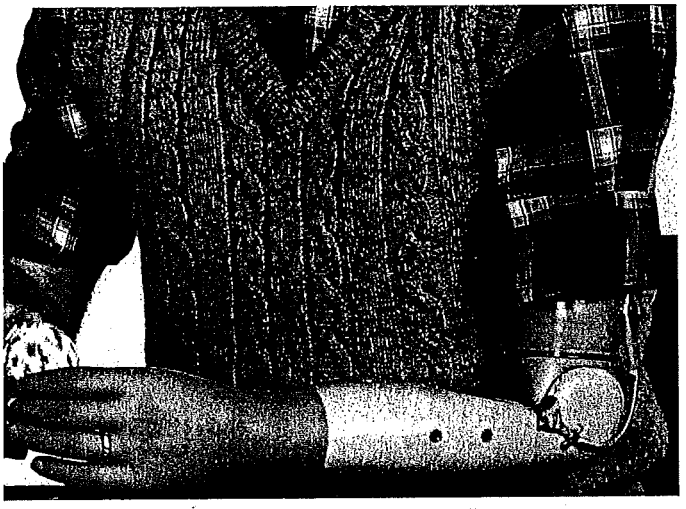

Compactness — when it has to fit into a small space.

Harmonic Drive®

HD 0048

THE ADVANTAGES OF HARMONIC DRIVE GEARING

Because it consists of only three simple parts, Harmonic Drive gearing offers design engineers the freedom to integrate drive components directly into machines or equipment. Harmonic Drive is a pure torque couple with all concentric elements and requires less space and less bulky support structures than conventional gearing.

Harmonic Drive's precision and performance are ideal in applications requiring accurate positioning or precise motion control.

Low or Zero Backlash
Natural gear preload and almost pure radial tooth engagement allow standard Harmonic Drive gearing to operate with essentially zero backlash for the entire gear life without preload adjustments or significant wear.

Efficiencies as High as 90%
Measured on actual shaft-to-shaft losses rather than tooth losses (as with other gearing), standard Harmonic Drive gearing efficiencies are normally in the 80 – 90% range.

Simple Support Requirements
Since torque is transmitted by pure couple, Harmonic Drive gearing does not generate radial loads and, therefore, can be used with much simpler bearings and less structural support than other forms of gearing.

HDC CUP COMPONENT GEAR SET

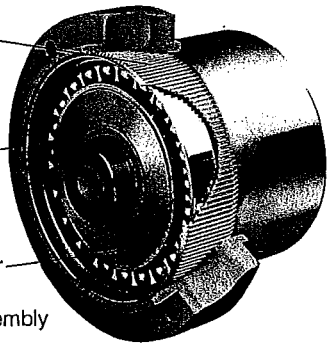

High Single-Stage Ratios From 50:1 Up
Depending on size, Harmonic Drive products offer ratios from 50:1 (60:1 for standard products) to as high as 320:1. Using compound drives, much higher ratios can be achieved.

Torque Equal to Drives Twice as Large
Pound for pound, no other mechanical power transmission can compare with Harmonic Drive gearing for torque capacity.

Excellent Positional Accuracy and Repeatability
Harmonic Drive gearing's design ensures that approximately 10% of the total teeth are engaged at any point in time, minimizing the effect of tooth-to-tooth error. Accuracies as fine as 30 arc seconds are achievable in some sizes. Repeatabilities are in the arc second range.

Design Flexibility
Harmonic Drive gearing allows designers multiple input/output possibilities in speed reduction and speed increasing applications. Concentric shafting makes it ideal for differential designs.

Long Life and High Reliability
Proven in years of industrial, military, and other applications, Harmonic Drive gearing has an average life of over 15,000 hours at rated loads. In addition, the tooth mesh is unaffected by the impact of stepping motors or frequent starts, stops, and reversals.

PRINCIPLE OF OPERATION

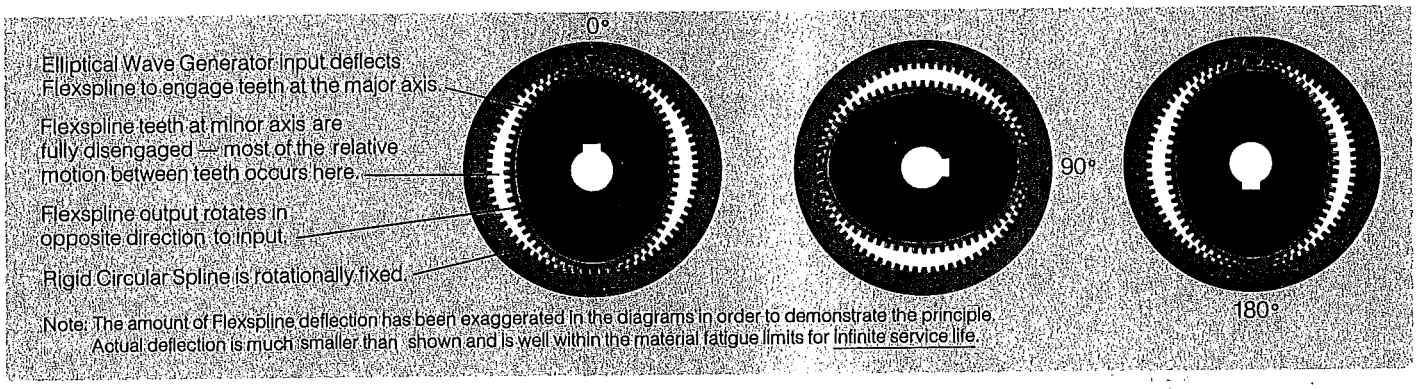

The teeth on the nonrigid Flexspline and the rigid Circular Spline are in continuous engagement. Since the Flexspline has two teeth fewer than the Circular Spline, one revolution of the input causes relative motion between the Flexspline and the Circular Spline equal to two teeth. With the Circular Spline rotationally fixed, the Flexspline rotates in the opposite direction to the input at a reduction ratio equal to one-half the number of teeth on the Flexspline.

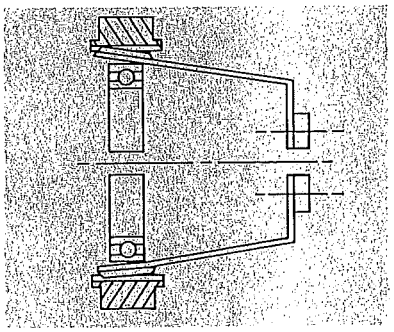

This relative rotation may be seen by examining the motion of a single Flexspline tooth over one-half an input revolution. The tooth is fully engaged when the major axis of the Wave Generator input is at 0°. When the Wave Generator's major axis rotates to 90°, the tooth is fully disengaged. Full reengagement occurs in the adjacent Circular Spline tooth space when the major axis is rotated to 180°. This motion repeats as the major axis rotates another 180° back to 0°, thereby producing the two tooth advancement per input revolution.

All tabulated Harmonic Drive gear reduction ratios assume output through the Flexspline with the Circular Spline rotationally fixed. However, any drive element may function as the input, output, or fixed member.

Zero Backlash

All Harmonic Drive cup-type gearing products have zero backlash at the gear mesh.

Under most circumstances, this zero backlash lasts beyond the expected life of the drive. This unusual characteristic is due to the unconventional tooth path combined with a slight cone angling of the teeth caused by deflection of the cup walls. Together, these factors produce preload and ensure very little sliding and no relative motion between teeth at the points where most of the torque is transferred.

While a small amount of backlash occurs at the oldham input coupling, because of the high ratios involved, this backlash becomes negligible when measured at the output. Even this backlash can be eliminated by coupling directly to the Wave Generator. Please consult the factory for methods and guidelines.

HARMONIC DRIVE IS AVAILABLE AS BOTH GEARING COMPONENTS AND HOUSED TRANSMISSIONS

For design flexibility, Harmonic Drive offers both components and housed transmissions. Whether you need to maximize space or performance, or simplify incorporation, Harmonic Drive has a product to meet your specific design requirements.

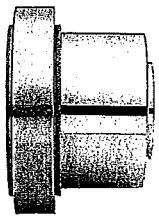

HDC

Cup Component Gear Sets

- Highest torque-to-weight and positional performance
- For direct design integration
- Zero backlash availability
- Sizes from 3 ounces/30 lb-in to 39 pounds/35,000 lb-in

HDF

Pancake Component Gear Sets

- The most compact, single-stage, high-ratio gearing available
- For applications where space is a primary constraint
- Ideal for building 1:1 differentials
- Low backlash

HDR

Heavy-Duty Pancake Component Gear Sets

- Double-bearing version of HDF Pancake Component Gear Sets
- High torque capacity
- High shock capacity

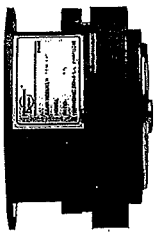

PCR

Precision Compact Reducers

- Cup component performance in a very compact housing
- Flange output for direct mounting to machine elements
- Ideal for index tables and robot arms
- Rotatable housing design can be used for 2-speed slew and feed applications

PSR

Precision Servo Reducers

- Conventionally configured speed reducers
- For small servo applications

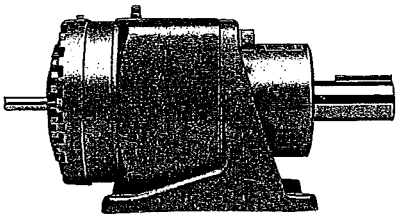

ISR

Industrial Speed Reducers

- Heavy-duty, industrial-grade speed reducers
- Cup component design provides concentric shafting
- For high-ratio, continuous-use applications

HD 0050

Harmonic Drive Technologies
Teijin Seiki Boston, Inc.
247 Lynnfield Street, Peabody, MA 01960
TEL: (508) 532-1800 • FAX: (508) 532-9406

Harmonic Drive™ TECHNOLOGIES

HD 0051

HKC CUP COMPONENT GEAR SETS

- **Improved Stiffness**
- **Improved Accuracy**
- **Higher Momentary Load Capacity**

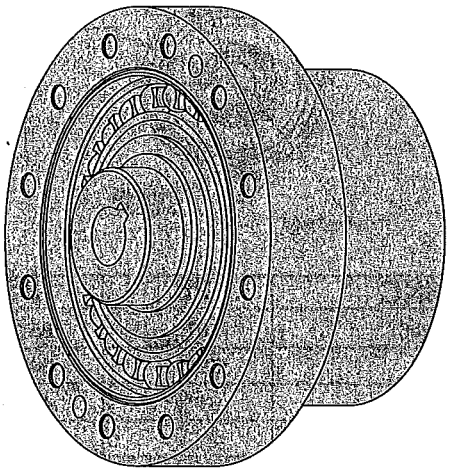

HKC component gear sets from Harmonic Drive Technologies provide the excellent torsional characteristics necessary to meet the ever increasing demands of the servo designer.

Improved gear design offers superior torsional stiffness over standard HDC gear sets, often doubling the spring rate in the low torque range.

Maximum positional error is typically in the ±40 arc second range in all sizes.

HKC RATING'S TABLE[1]

HKC	RATIO	RATED OUTPUT TORQUE @ 2000 RPM		LIMIT FOR MOMENTARY PEAK TORQUE		STATIC TORQUE LIMIT		MAX INPUT SPEED (RPM)		STANDARD W/G INPUT INERTIA	NO-LOAD STARTING TORQUE
		lb-in	Nm	lb-in	Nm	lb-in	Nm	Oil	Grease	lb-in² (kg-cm²)	oz-in (N-cm)
20	80	360	40.7	1120	127	2200	245	10000	5600	.093 (.265)	6 (4.2)
	100	370	41.8	1300	147						
	120	380	42.5	1300	147						
25	80	550	62.1	2260	255	3400	384	8000	4500	.207 (.61)	11 (7.9)
	100	570	64.4	2510	284						
	120	590	66.7	2690	304						
	160	610	68.9	2780	314						
32	80	1100	124	5000	564	6900	779	7000	3500	.67 (1.96)	21 (15)
	100	1150	130	5700	643						
	120	1190	134	6000	677						
	160	1250	141	6000	677						
40	80	2410	272	8600	971	15000	1695	5600	2800	1.8 (5.27)	42 (30)
	100	2510	283	9600	1084						
	120	2580	292	10,500	1186						
	160	2670	301	10,500	1186						

Rated output torque based on a L_{10} life of 7000 hours at 2000rpm input speed.

Shock loads such as those generated by emergency stop or collisions must not exceed the limits for momentary peak torque, and must be limited in their frequency.

MADE IN USA

Harmonic Drive® TECHNOLOGIES

HD 0052

HDM

RESPONSYN®
Ultrahigh Resolution Stepping Motors

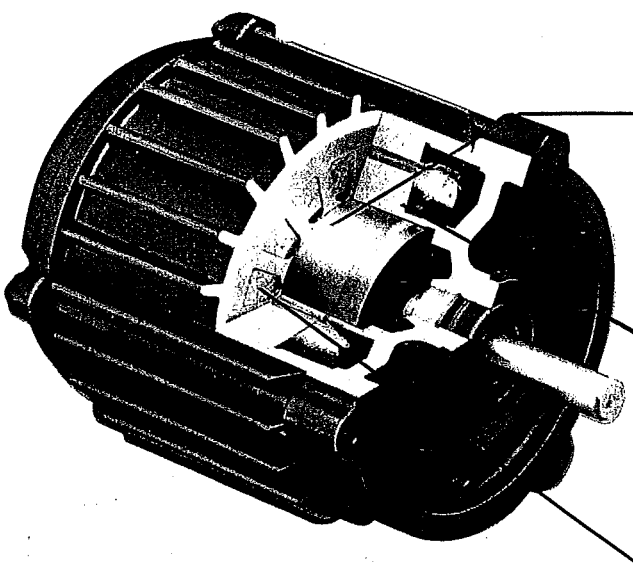

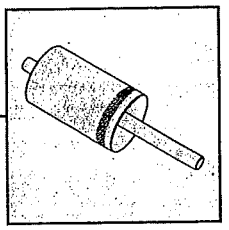

Thin, Hollow "Shell Type" Rotor
- High start/stop rates
- Motor reaches full speed in about 1.2 milliseconds
- No resonance throughout entire torque/speed range

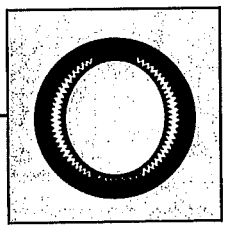

Positive Spline Engagement at Every Step
- Exceptional torsional stiffness
- Accurate positioning even under real inertia loading
- High resolution — up to 4000 pulses per revolution without ministepping
- 5-10 milliseconds settling time

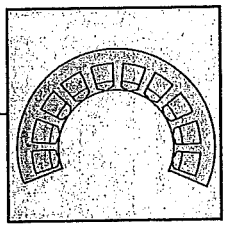

Discrete Pole Stator
- For simple open-loop, unipolar control
- Torques to 350 oz.-in.

Description

The RESPONSYN® stepping motor is a precision electromechanical actuator with a high speed input, the stepping magnetic stator field; a fixed element, the Circular Spline; and a high torque output, the flexrotor.

The flexrotor is flexible and toothed on its outer surface. The Circular Spline is rigid and toothed on its inner surface. A magnetic field, produced by energizing opposing stator poles, pulls the flexrotor into an elliptical shape engaging the Circular Spline.

Rotating the magnetic field by turning on and off sequential pairs of poles causes the elliptical shape of the flexrotor to rotate in progressive mesh with the Circular Spline.

Since the flexrotor has fewer teeth than the Circular Spline, a high ratio is produced (typically 100:1) which results in very small incremental steps and large torque capacity at the motor shaft.

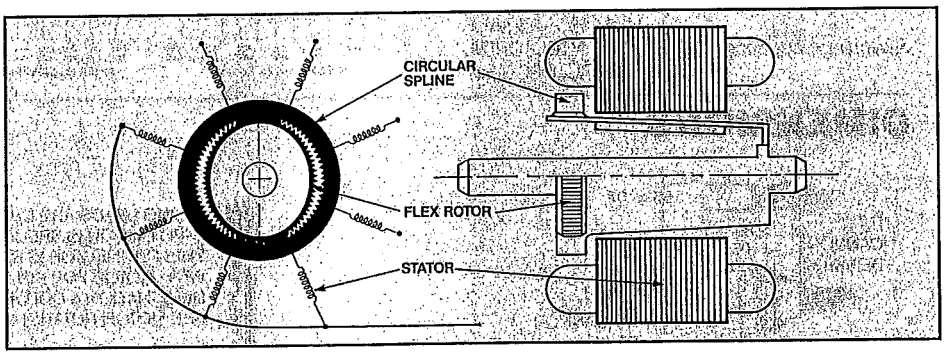

High Performance, Low Maintenance

Positional Accuracy

RESPONSYN motors are most often applied in open-loop digital positioning systems, where absolute positional accuracy is extremely important. HDM-165 and HDM-185 motors are accurate to ±3.5 arc minutes. These accuracies are noncumulative, i.e., independent of the number of steps taken. The accuracies quoted above have been demonstrated by test on hundreds of production motors.

Transient Characteristics

The accompanying chart shows the shaft motion as a function of time for a single step.

Typical values for the HDM-165-800-4 RESPONSYN motor are:

Crossover Time (t_c)	=1.2 milliseconds
Settling Time (t_s)	=6.3 milliseconds
Overshoot (A_p)	=40 %
Step Angle (θ_s)	=.45 degrees

Crossover time (t_c) from the zero to the point where the shaft accomplishes rotation equivalent to 1 step (0.45 degrees for every 800 step/rev. motor) is generally between 1.2 and 1.5 milliseconds. With the exception of the first step, the time between steps is determined by the stepping rate at which the motor is driven.

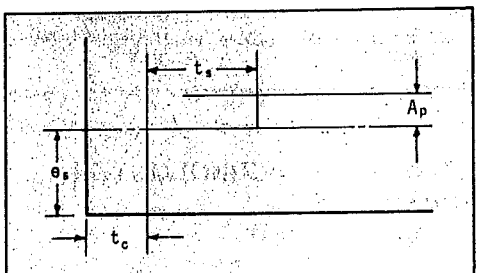

Note: RESPONSYN motors reach operating speed in one fine angle step (0.45 degrees in this case).

Holding Torque — Torsional Stiffness

RESPONSYN motors provide holding torques up to two (2) times the maximum dynamic torque rating of the motor at rated current.

Temperature

RESPONSYN motors can be operated in ambient temperatures between 0°C and 40°C. Performance characteristics are based on 40°C maximum environment with the motor limited to rated current. Improved performance can be obtained by increasing the current. The motor case temperature must be limited to 65°C maximum. In certain cases, fan cooling may be necessary to maintain this temperature.

No Lubrication

RESPONSYN motors are prelubricated for life.

© 1990 Harmonic Drive

INFINIT-INDEXER®
Phase Adjuster

- ***Fine tune rotational position of shafts and machine parts***
- ***Phase cams***
- ***Adjust roll registration***
- ***Take up backlash in spur and worm gears***
- ***Synchronize indexing devices***

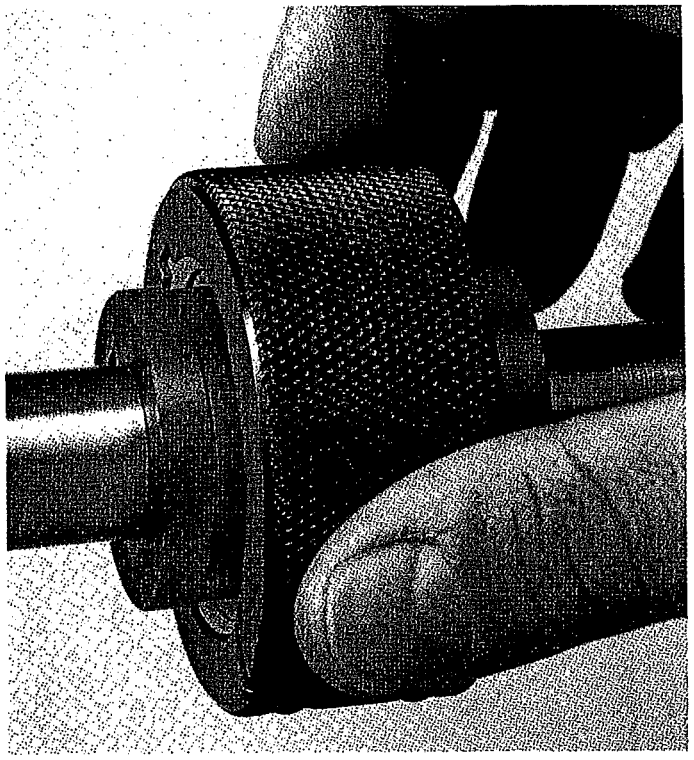

OPERATION

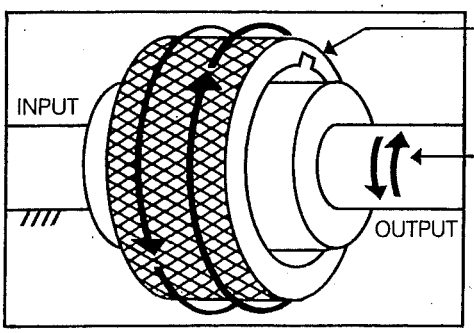

1 rotation of adjusting ring produces 1/100 rotation of output shaft in the same direction

To operate, hand rotate the adjusting ring in either direction to produce a 100:1 reduction between the ring and the output. Adjust the friction adjustment/locking screw to desired resistance. For some applications, one adjustment will be sufficient for both shaft turning and phase adjusting modes. For more severe loading, such as hard stopping or higher torques, the friction adjustment/locking screw may be used to lock the adjusting ring in place to maintain phase.

3 MODELS, 6 BORE SIZES AVAILABLE FROM STOCK

INFINIT-INDEXERS® are available immediately from stock in the standard bore sizes shown, with keyways and set screws, and tapped holes for face mounting of either hub. It is possible for the user to modify these configurations by disassembling the unit. The hub material is low carbon mild steel suitable for machining. Maximum bore diameters for each size are shown in notes to the dimensional drawings.

HDI Size	Bore Size	O.D.	Length	Torque Capacity
-10	½″ ⅝″ ¾″	2⅜″ (60.3 mm)	1 11/16″ (42.9 mm)	1000 lb -in (113 Nm)
-25	¾″ 1″	3″ (76.2 mm)	2 3/16″ (55.6 mm)	2500 lb -in (283 Nm)
-50	1¼″	3¾″ (95.3 mm)	2⅜″ (60.3 mm)	5000 lb -in (565 Nm)

© 1992 Harmonic Drive Technologies

ISR

Industrial Speed Reducers

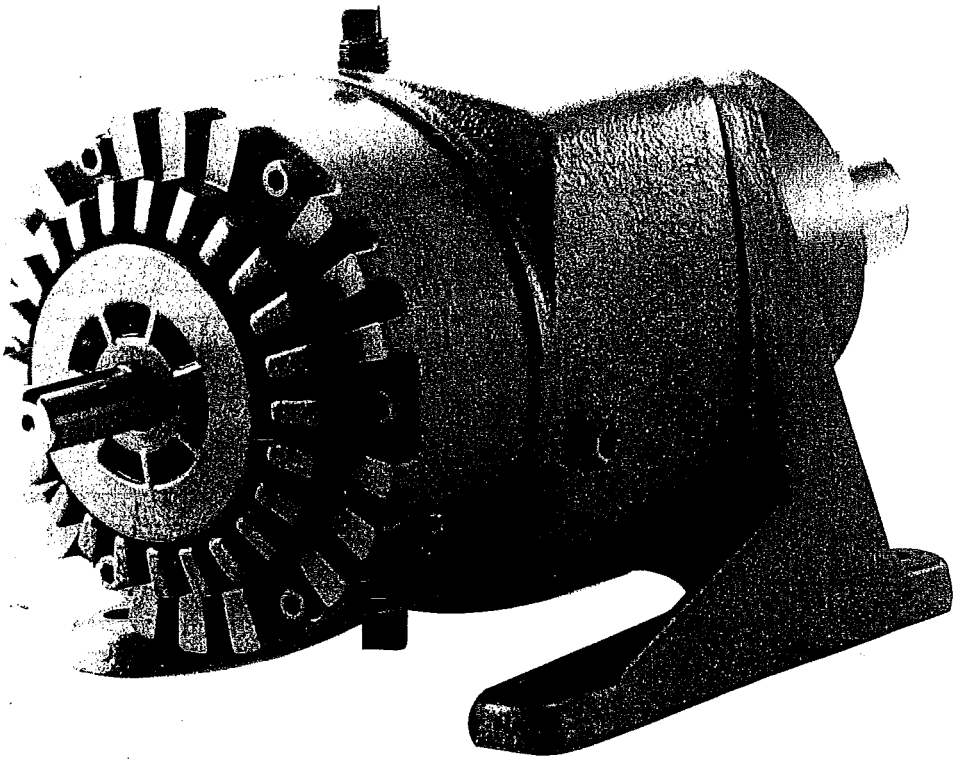

Description

The Harmonic Drive ISR Series speed reducer is a proven power transmission that will provide thousands of service-free operating hours when properly lubricated and operated within the specified ratings. Workmanship and material is warranted for one year from date of delivery; however, the average life under rated conditions is expected to be at least 15,000 hours. Parts List and Installation Drawings are available on request.

Installation

ISR Series speed reducers are offered for foot mounting (-0), face mounting (-1), and close couple (-cc) installations. Optional horizontal wall or ceiling mounting can be easily accomplished by simply repositioning the ISR housing in the mounting foot to maintain the vent plug in an upright vertical position. The ISR can be face mounted or foot mounted using the same four screw holes.

Close couple ISR reducers are identical to standard units except that the end cover and input shaft are removed. They can be used where space restrictions require a motor/gearhead configuration. The motor frame is connected to the reducer housing through an adapter plate normally furnished by the user. The motor shaft connects directly to the input stage of the reducer.

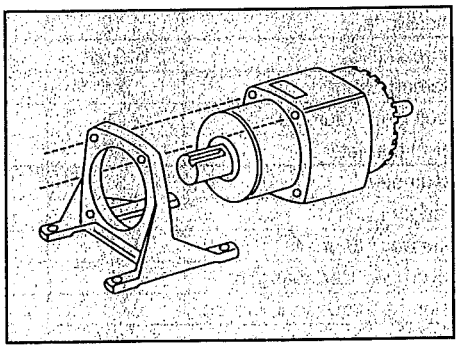

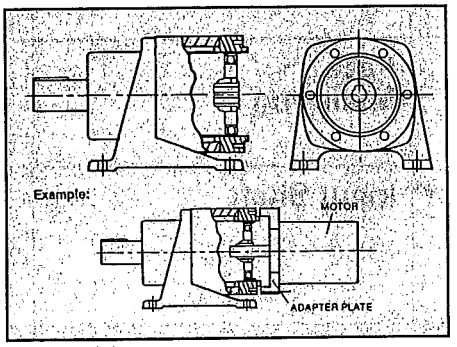

Lubrication

Oil

ISR reducers are shipped ready for horizontal, floor mounted service using oil lubrication unless otherwise specified. Automatic transmission fluid with a maximum 200°F operating temperature is recommended for normal drive conditions and must be added by the user to the prescribed level prior to operation. The approximate required volume is shown in the chart below. Consult the factory for alternate recommendations when abnormal conditions exist.

Size	3C	5C	1M	2M	4M
Oil Vol. (Fl. Oz.)	1.7	3.4	6.8	13.6	27

For vertical operation, oil fill, vent, and drain plugs must be rearranged. The only recommended vertical attitude is with the output shaft facing downward. Consult the factory for lubricating procedures.

Oil changes are recommended after the first 100 hours of operation and every 1000 hours or six months thereafter, whichever occurs first.

Grease

ISR units can be shipped with grease lubrication when specified by the customer. Because of the typically lower thermal ratings for grease lubrication, such units should not be operated at rated output torque at continuous input speeds greater than those shown below.

Size	3C	5C	1M	2M	4M
RPM	2800	2200	1700	1400	1100

Rated or higher input speeds can be considered for intermittent operation and/or reduced output torque conditions. While grease-lubricated units may be mounted and operated in any altitude, we recommend that users consult the factory for specific application recommendations.

© 1992 Harmonic Drive Technologies

PCR & PSR

Precision Speed Reducers

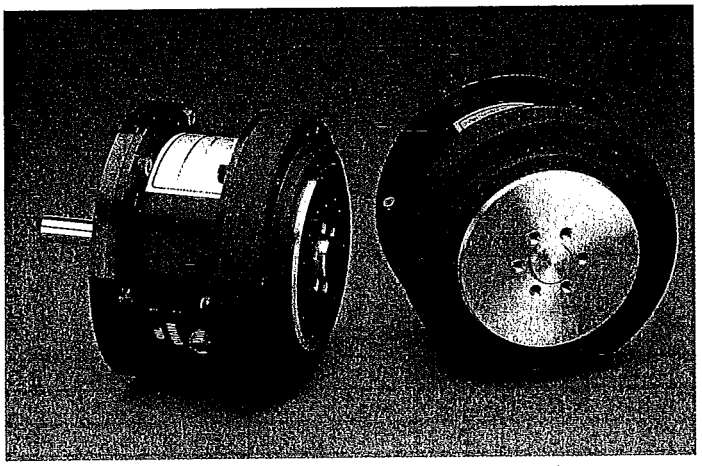

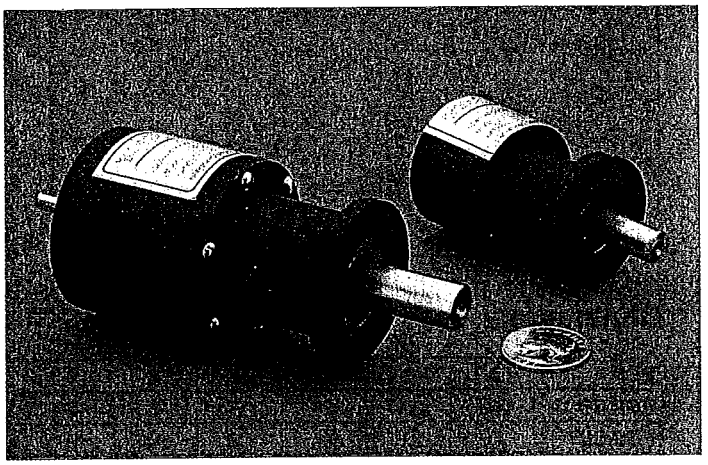

PCR Precision Compact Reducers

- Compact in-line speed reducers
- 50 to 200 times the torque from servomotors or steppers
- Provides a simple method for creating differentials
- Low to zero backlash
- Accuracies to arc minutes

PCR precision speed reducers provide high accuracy in minimum space. Unaffected by stepping impact, PCR reducers provide 50 to 200 times the torque of servomotors or steppers.

The heart of the PCR is advanced Harmonic Drive gearing, the industry's most adaptable and precise gearing systems for more than 30 years.

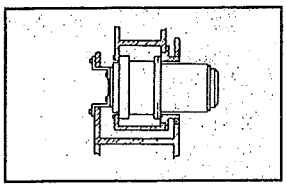

A.

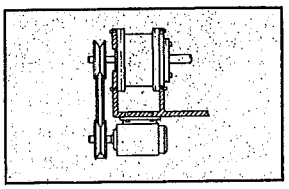

B.

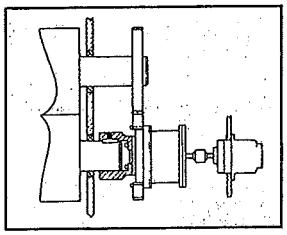

C.

A. Reducer hub output can be directly mounted to output structure for maximum space efficiency and stiffness.

B. Input and/or output can be attached to a shaft, belt, gear, or pulley for application versatility.

C. Reducer housing can be a rotating element, providing a simple method for creating differentials.

PSR Precision Servo Reducers

- Conventionally configured speed reducers
- For small servo applications
- High ratios
- Low to zero backlash
- Accuracies to arc minutes

Now you can get the torque you need to do big jobs even from small stepper and servo motors. Harmonic Drive Precision Servo Reducers are miniature in-line drive speed reducers designed for applications requiring high ratios in small spaces. Small but strong, PSR reducers are unaffected by stepping impact.

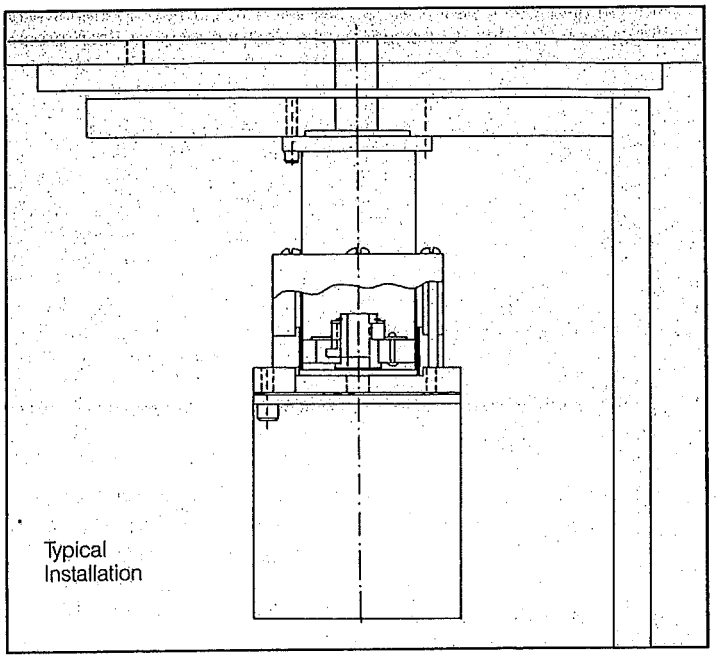

© 1992 Harmonic Drive Technologies

HDR

Heavy-Duty Pancake Component Gear Sets

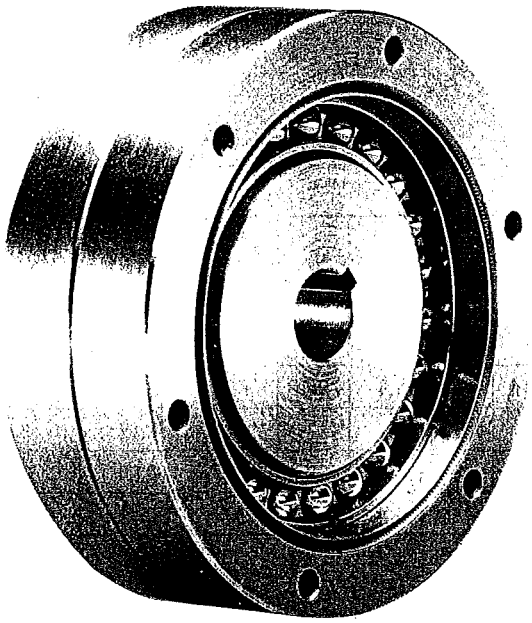

Features

- Double-bearing version of HDF Pancake Component Gear Sets
- High torque capacity
- High shock capacity
- Ratios from 80:1 to 200:1
- Low backlash

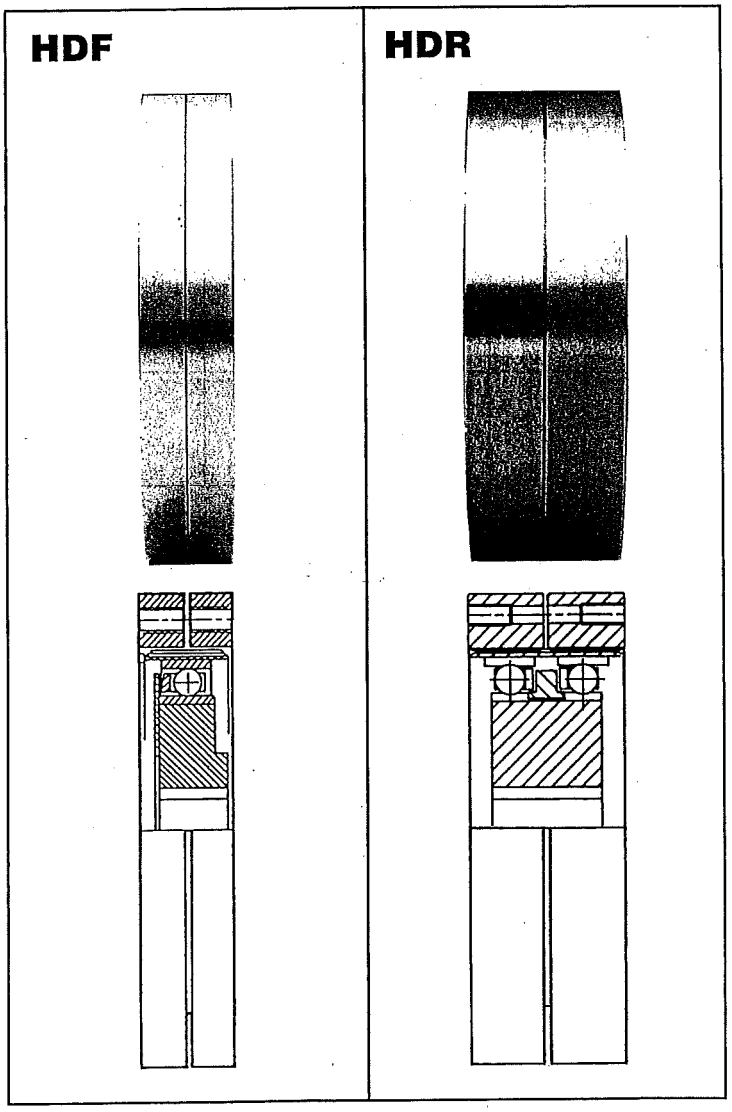

Harmonic Drive HDR Heavy-Duty Component Gear Sets provide the torque capacities of HDC Cup Components combined with axial compactness close to that of HDF Pancake Components. Actually a double-bearing version of the HDF Pancake gearing (described on Page 6 of the "Cup and Pancake Component Gear Sets" brochure), HDR gearing is recommended for applications where generally heavier service is required. Its higher capacities make it ideal for use in applications involving high torque loads due to sudden reversals, web jams, or high inertia.

Like HDF gearing, Harmonic Drive heavy-duty HDR gearing offers machine designers a very compact, yet simple means of achieving high ratio speed reduction or of phasing differentials.

Backlash

Compared to most other forms of high-ratio gearing, HDR exhibits very low backlash — typically in the 10 to 35 arc minute range. Because Harmonic Drive pancake gearing lacks the natural preload found in Harmonic Drive cup type gearing, HDR does not have zero backlash. For a more detailed discussion of backlash, see Page 2 of the "Cup and Pancake Component Gear Sets" brochure.

© 1992 Harmonic Drive Technologies

Harmonic Drive™ TECHNOLOGIES

HDB

Phasing Differential Gear Sets

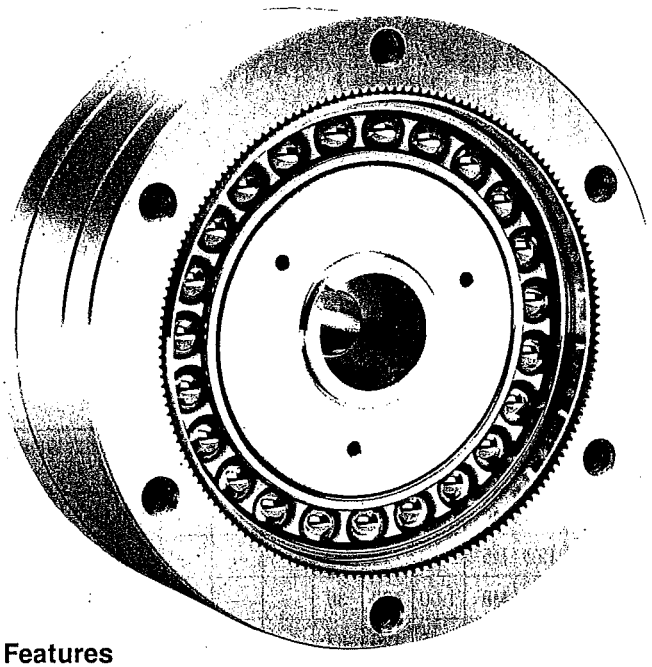

Features

- For dynamic registration of rotating elements
- A 1:1 differential with high-ratio trim adjustment
- Ideal differential for roll registration or angular shaft phasing
- Compact, low-backlash design for end-of-roll mounting

Harmonic Drive HDB differential drive transmissions allow easy and direct phasing of rotating elements while they are in motion. An end-of-roll dynamic phasing 1:1 differential, the HDB provides roll registration through precisely controlled trim input. It is ideally suited for web presses or other machines requiring constant monitoring and adjustment of rotating cylinders, wheels, cams, cutoff knives, and indexing devices. HDB's compact design integrates both driving and trimming capabilities at the end of the rolling element. Low backlash and high trim ratios allow precise tuning.

Derived from Harmonic Drive's field-proven pancake gearing,* HDB has two offsetting speed changes through which high drive horsepower is delivered to the roll at a 1:1 ratio, and trim is applied at low power through either of two inputs. This allows essentially direct driving of the roll and the flexibility of applying either manual trim, motorized trim, or both.

Drive Power

Drive power circulates through the gearset to the roll or driven element with an efficiency of approximately 99 percent. Power is applied to the first of three ring gears called circular splines. Torque is transmitted from the first circular spline (S1) to the third circular spline and output element (S2) through two Harmonic Drive gear ratios. The first is a very slight increasing ratio between S1 and the middle circular spline (D). The second is a very slight reduction ratio between the D spline and the S2 circular spline. When the drive is operated without trim input, the increasing and reducing ratios offset one another and the S1 and S2 circular splines turn in the same direction and at the same speed yielding an overall ratio of 1:1.

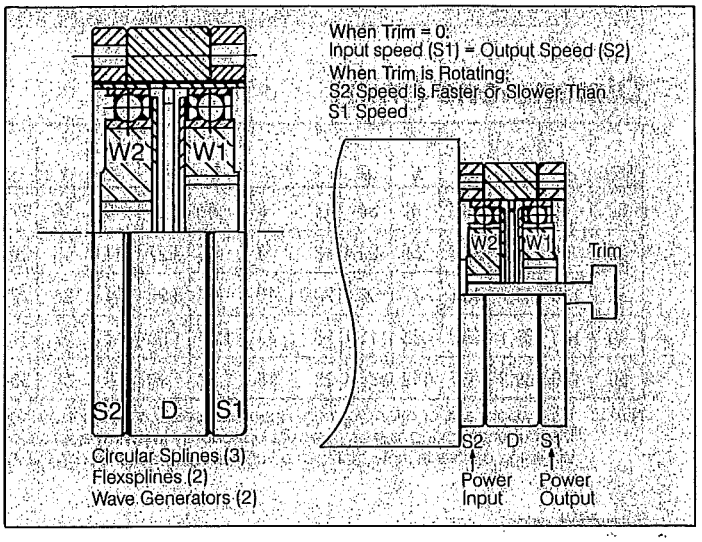

Trim

When trim is applied, one of the two wave generators (W2) rotates creating a high-ratio speed reduction between the trim speed and that of the S2 circular spline. With the other wave generator (W1) fixed to ground, the high-ratio trim input (depending on its direction) advances or retards the output speed relative to the power input speed.

The output speed of the HDB, while trim input is being applied, can be calculated with the following formula:

$$N_{HDB} = N_{S1} \pm [N_{W2} / (R+1)]$$

If two trim inputs are desired, each wave generator can be attached to a different input source. For example, one input can be a servomotor for high-speed automated trim, and the other a hand crank for low-speed manual trim. Consult the factory or your regional Harmonic Drive sales engineer for applications assistance.

Ratios

HDB Gear Sets are available in standard ratios of 80:1, 100:1, 120:1, and 160:1. Other ratios are available on a custom basis.

If an 80:1 ratio gear set is chosen, for example, trim is applied at a speed reduction ratio of either 80:1 or 81:1 depending on which trim shaft is used. High-ratio trim input allows the application of trim at low power to an element being driven at high horsepower.

*NOTE: See "Cup and Pancake Component Gear Sets" brochure for operating principles of Harmonic Drive pancake gearing.

© 1992 Harmonic Drive Technologies

•MSR

QUICK CONNECT GEARHEADS FOR SERVO MOTORS

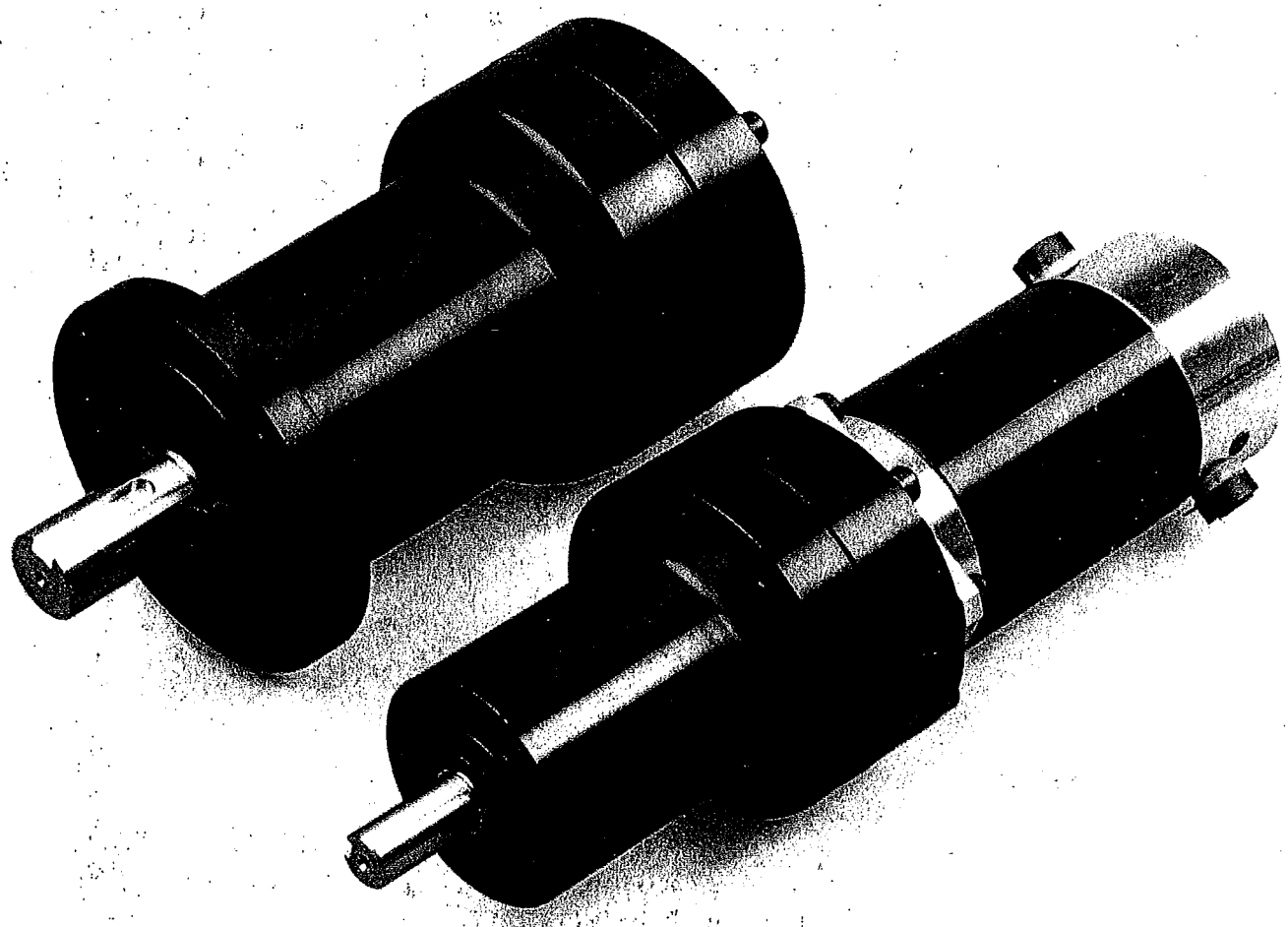

Harmonic Drive® TECHNOLOGIES

HD 0066

MSR Precision Gearheads

MSR gearheads provide the benefits of harmonic drive gearing in a housing that includes motor mounting interfaces and a simple to use coupling for quick and easy attachment to a motor shaft. The user is then able to quickly fashion a high precision servo actuator using any of a variety of popular servo of stepper motors.

A zero-backlash coupling, an input shaft seal, grease, mounting screws and assembly instructions are all included with each MSR.

The HARMONIC DRIVE gearing in MSR gearheads provides single stage high gear ratios, zero mechanical backlash, positionally accurate output and very high torque in a small package. The unique radial tooth mesh delivers a long life with minimal wear, and is unaffected by the repeated impact of starts, stops and reversals.

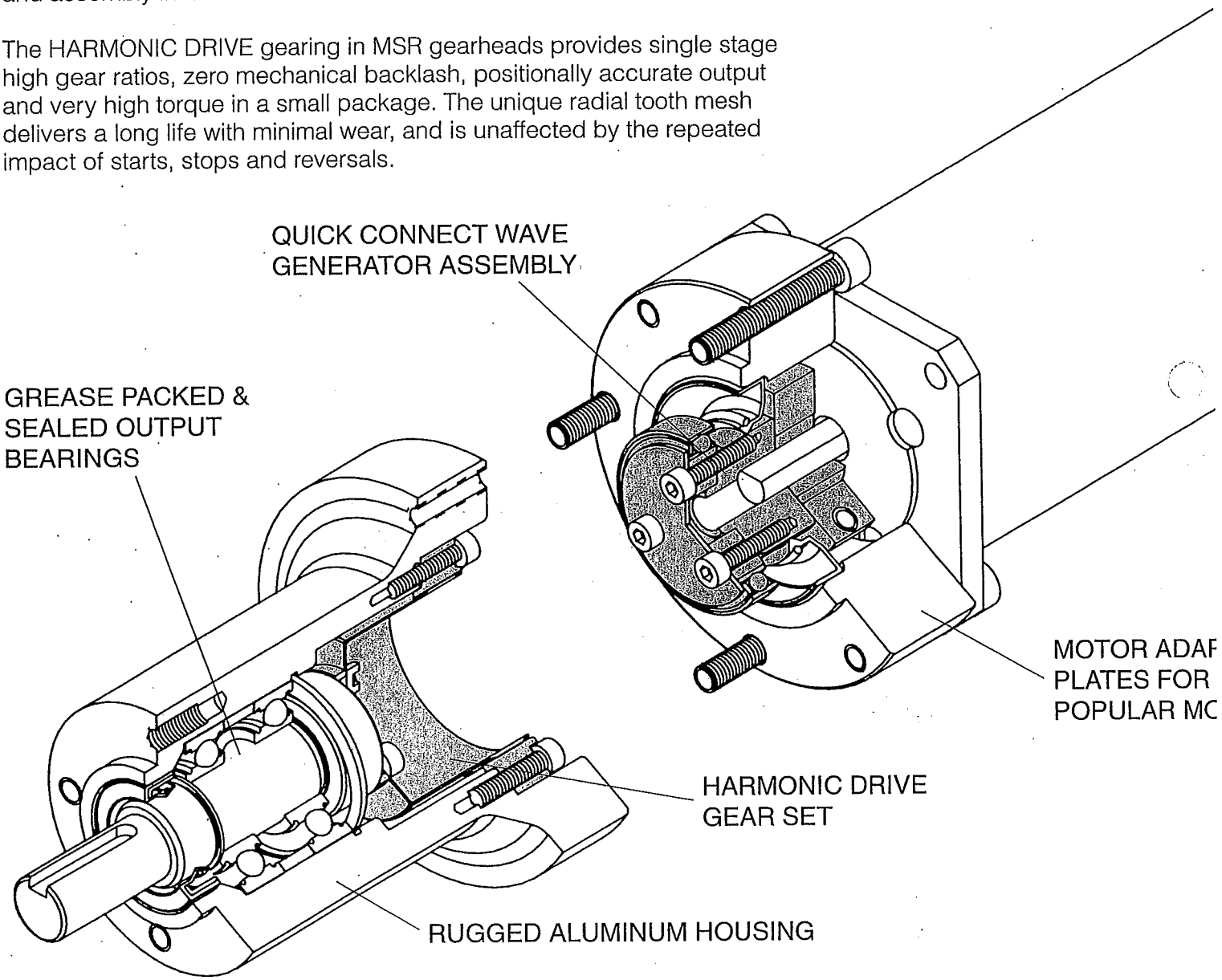

THE PROVEN TECHNOLOGY OF HARMONIC DRIVE GEARING OFFERS:

- Outstanding positional accuracy
- In-line, high single-stage reduction
- Low or zero backlash configurations
- Long life and high reliability
- Exceptional torque-to-weight ratio
- High efficiency
- Configuration versatility

HD 0067

MSR14

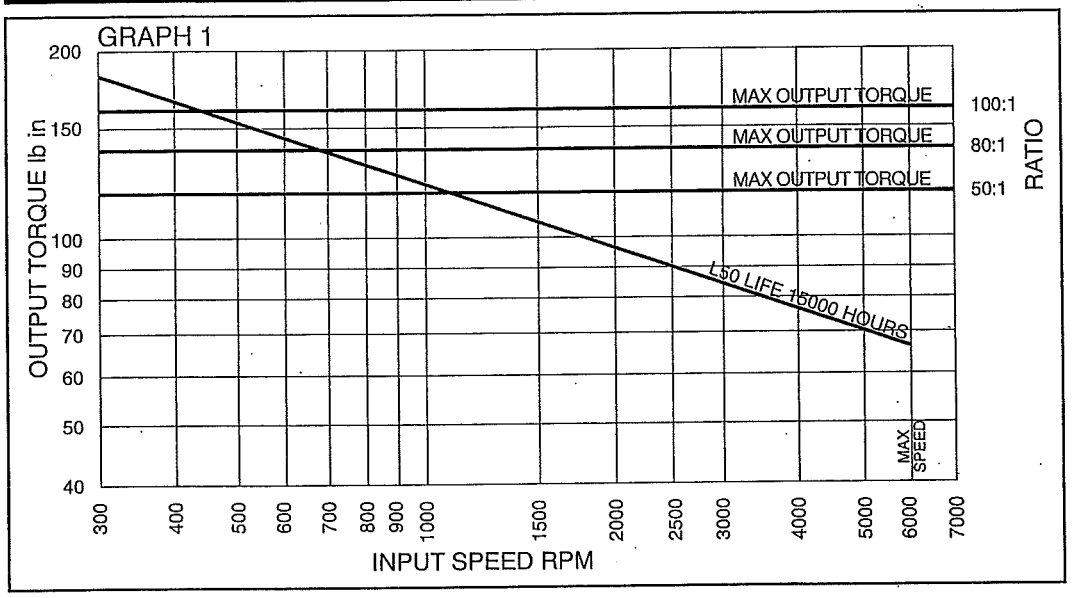

MSR20

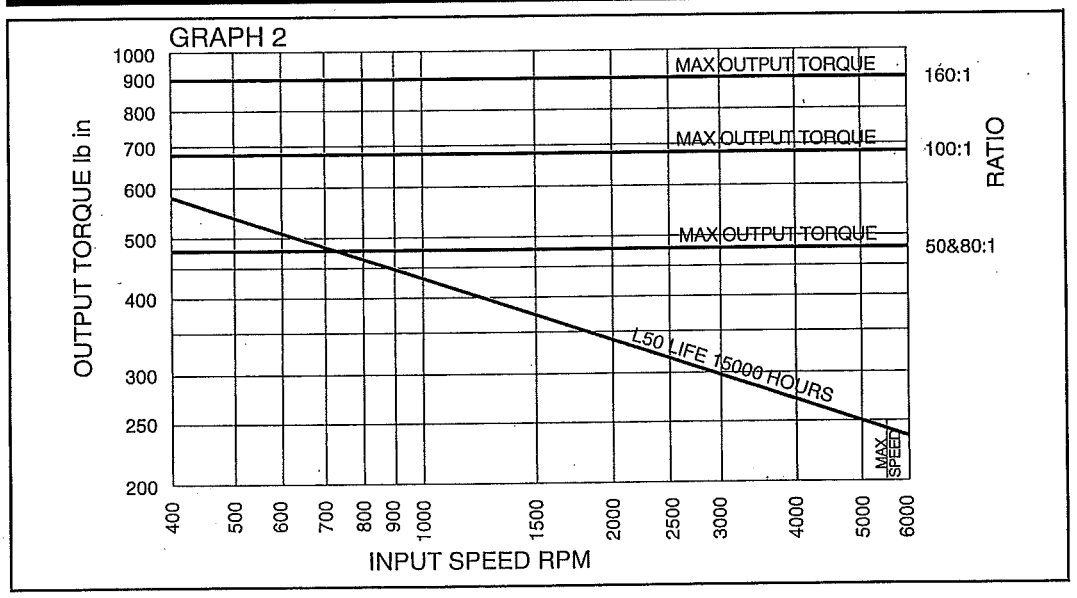

Ratings

The operating life expectancy of a MSR gear set is based on the life of the ball bearing used on the input wave generator when run continuously at rated torque. Because of the unique Harmonic Drive operation, gear tooth life is well in excess of bearing life, provided maximum torques and speeds are not exceeded. The above graphs show maximum reducer output torque versus speed for an L50 life of 15,000 hours. Maximum output torques should never be exceeded.

Example

From graph 2, an MSR 20 with a ratio of 100:1 can deliver an output torque of 335 lb in at 2000 RPM for an expected L50 life of 15,000 hours. However, instantaneous start up or emergency stop peak loads should not exceed 680 lb in.

Ratios

Standard ratios are shown on the above graphs. However, other ratios may be possible:
See HDC cup component selection guide or consult factory for further details.

DIMENSIONS

NOTE: ALL DIMENSIONS IN MM

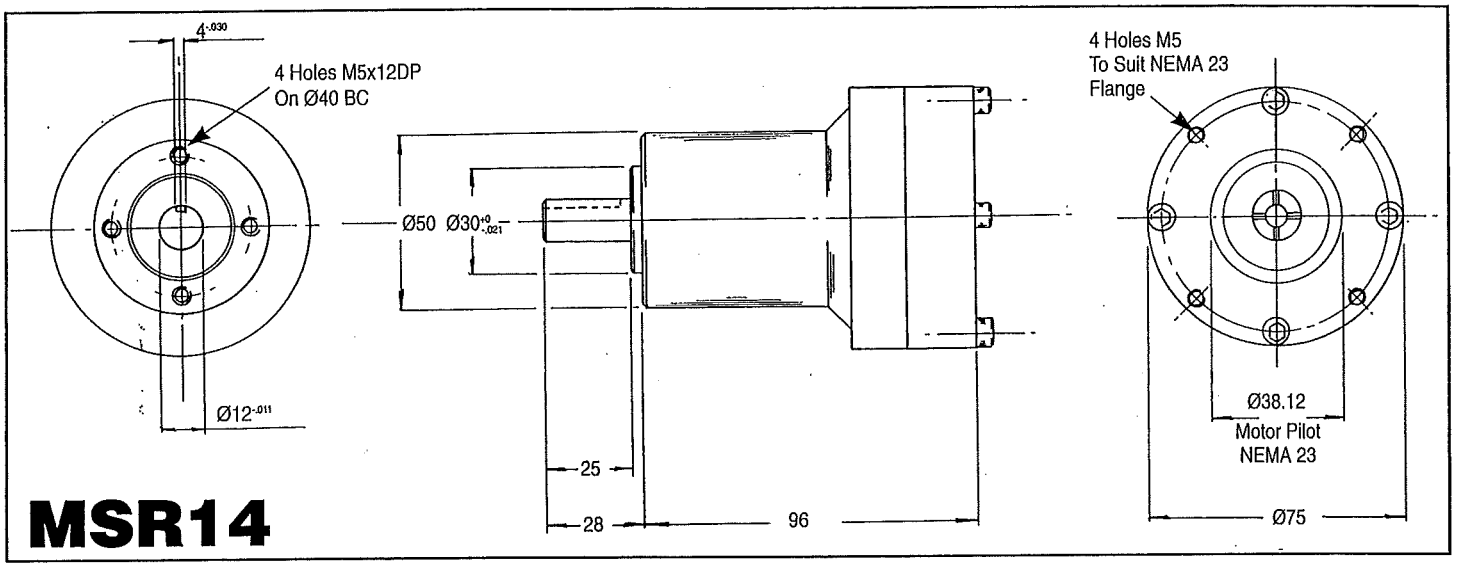

MSR14

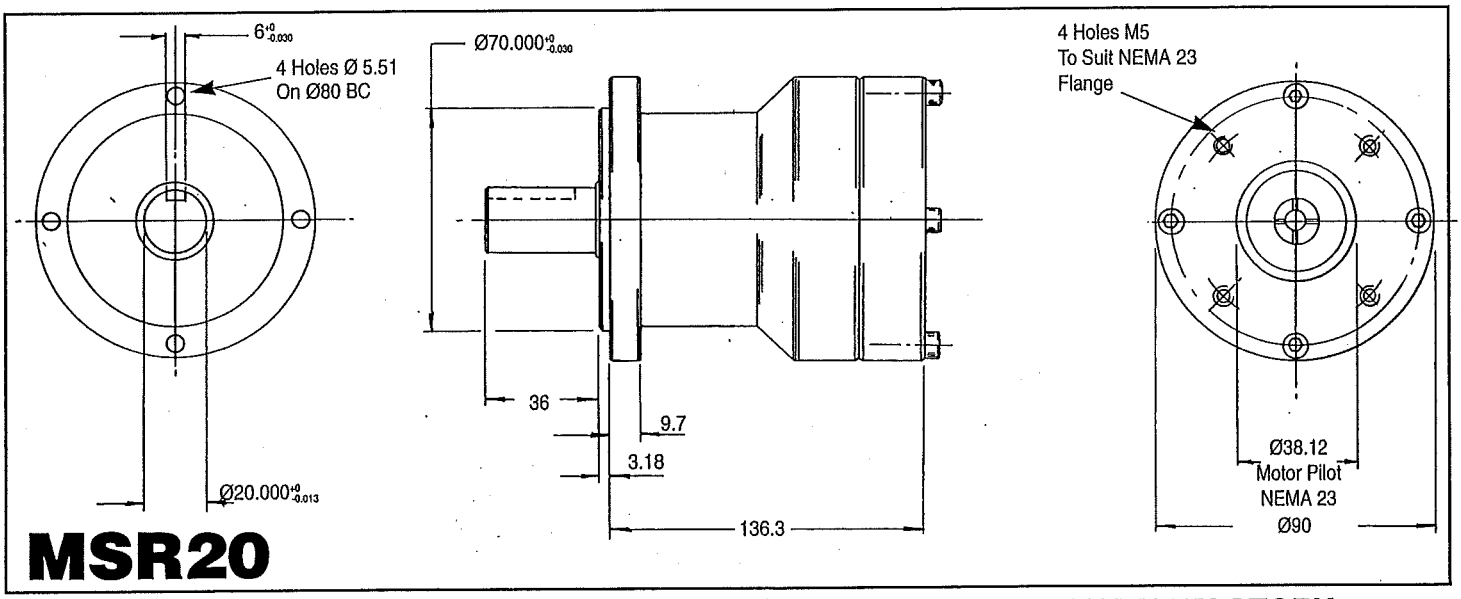

MSR20

FOR FULL DIMENSIONAL DETAILS & ASSEMBLY INSTRUCTIONS CONSULT FACTORY

ORDERING INFORMATION

MSR Gearheads are primarily designed for use with NEMA23 Motors. Consult factory for alternatives.

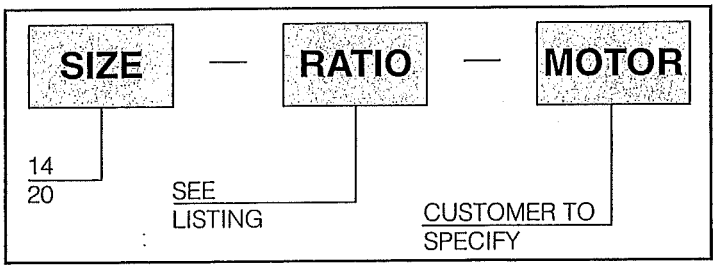

Harmonic Drive® TECHNOLOGIES

MADE IN USA

The information contained in this catalog may be subject to change without notice, consult factory.

Harmonic Drive Technologies
Teijin Seiki Boston, Inc.
247 Lynnfield Street
Peabody, MA 01960
TEL: (508) 532-1800
FAX: (508) 532-9406

PANCAKE COMPONENT GEAR SETS

Harmonic Drive® TECHNOLOGIES

HD 0070

Pancake Component Gear Sets

The Most Axially Compact, Single-Stage, High-Ratio Gearing Available

DYNAMIC CIRCULAR SPLINE:
An internal gear which has the same number of teeth as the Flexspline and which rotates at the same speed and in the same direction as the Flexspline. It usually is the output element to which an output shaft is connected.

FLEXSPLINE:
A thin-walled steel ring with external spline teeth that progressively engage the internal teeth of the Static Circular Spline and Dynamic Circular Spline at the major axis of its rotating elliptical shape. Speed reduction relative to the Wave Generator is equal to one-half the number of teeth on the Flexspline's outside edge. For example, if the Flexspline has 200 teeth, the reduction ratio will be 100:1.

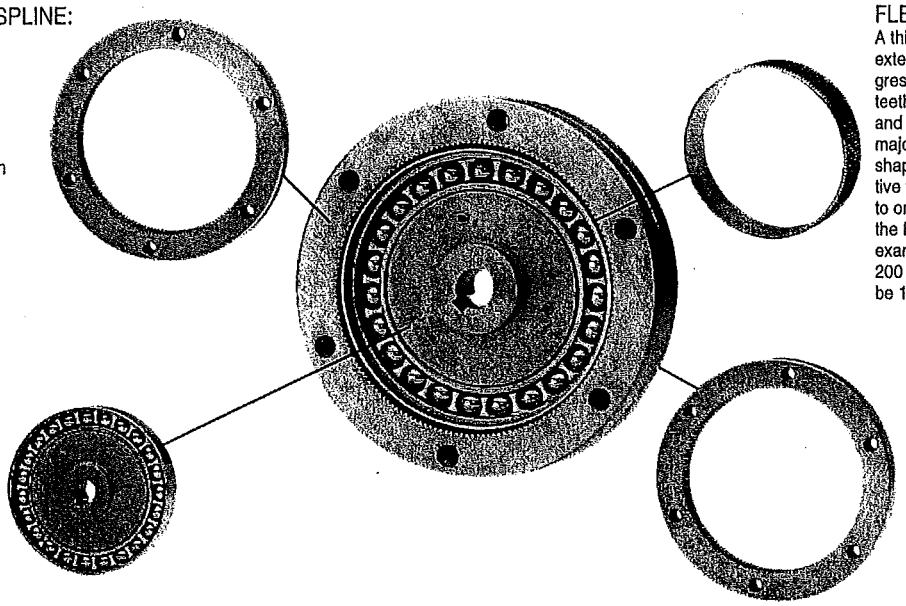

WAVE GENERATOR:
An Elliptical bearing and the rotating input element of the transmission. It is connected to a motor or other input shaft and imparts a rotating elliptical shape to the Flexspline.

STATIC CIRCULAR SPLINE:
A fixed nonrotating internal gear which provides mechanical grounding for the transmission. It has two more teeth than the Flexspline to establish a positive transmission reduction ratio equal to one-half the number of Flexspline teeth.

Harmonic Drive pancake component gear sets provide high ratio precision speed reduction in an extremely compact package, yet offer many of the desirable performance characteristics of HDC cup components.

Four styles of pancake gearing are available and are described below. This brochure contains technical specifications for each type and offers a guide to correct size selection. More complex applications not covered in this brochure can be referred to our Engineering Department.

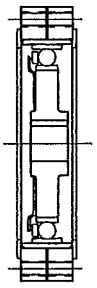

HDF

HDF pancake gearing uses a single wave generator bearing (see above) and is recommended for light duty speed reduction and phasing/differential applications. Ratios from 80:1 to 160:1 are available and output torques up to 5800 lb in (655 Nm).

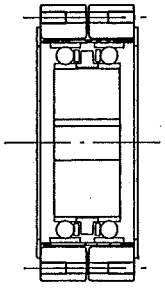

HDR

The HDR utilizes a double wave generator bearing and is a heavy duty version of the HDF with only minimal increase in overall length. HDR should be used where generally heavier service is required or sudden shock loads may be expected. Ratios from 80:1 to 160:1 are available and output torques up to 26000 lb in (3000 Nm).

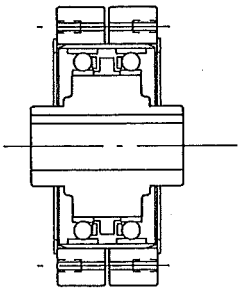

HDA

A variety of mounting options, and a large center through bore can be achieved by providing the HDR series with an extended and modified wave generator hub.
This style is designated HDA and standard ratios and performance ratings are as the equivalent HDR size.

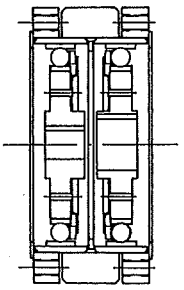

HDB

The HDB was developed as a versatile simple differential drive transmission for direct phasing of rotating elements while they are in motion. Offsetting internal gear ratios deliver a through ratio of 1:1 and trim adjustments can be applied through one or both of two wave generators. Standard ratios and output torques are as the HDF.

RATING'S TABLE

HDF & HDB

SIZE	RATIO	MAXIMUM INPUT RPM		RATED TORQUE @ 1750 RPM		MAXIMUM OUTPUT TORQUE		APPROXIMATE WAVE GENERATOR INERTIA		NO LOAD STARTING TORQUE	
		Oil	Grease	lb-in	Nm	lb-in	Nm	lb-in²	Kg-cm²	oz-in	N-cm
14 HDF ONLY	80	6000	3500	56	6	90	10	0.011	0.033	3.0	2.1
	100			56	6	90	10				
	110			56	6	90	10				
20	80	6000	3500	246	28	250	28	0.049	0.144	4.5	3.2
	100			246	28	300	34				
	120			246	28	350	40				
	160			246	28	390	44				
25	80	5000	3500	406	46	425	48	0.124	0.362	6.0	4.3
	100			406	46	600	68				
	120			406	46	700	79				
	160			406	46	780	88				
32	80	4500	3500	810	92	950	107	0.45	1.31	8.0	5.6
	100			810	92	1200	136				
	120			810	92	1400	158				
	160			810	92	1550	175				
40	80	4000	3000	1705	193	1700	192	1.17	3.43	27.0	19.0
	100			1705	193	2400	271				
	120			1705	193	2700	305				
	160			1705	193	3100	350				
50	80	3500	2500	3180	359	3100	350	3.39	9.89	50.0	36.0
	100			3180	359	4200	475				
	120			3180	359	5200	588				
	160			3180	359	5800	655				

HDR & HDA

SIZE	RATIO	MAXIMUM INPUT RPM		RATED TORQUE @ 1750 RPM		MAXIMUM OUTPUT TORQUE		APPROXIMATE WAVE GENERATOR INERTIA		NO LOAD STARTING TORQUE	
		Oil	Grease	lb-in	Nm	lb-in	Nm	lb-in²	Kg-cm²	oz-in	N-cm
20	80	6000	3500	355	40	470	53	0.095	0.28	12.8	9.0
	100			375	42	690	78				
	120			375	42	900	102				
	160			375	42	1120	127				
25	80	5000	3500	620	70	830	94	0.262	0.76	21.0	15.0
	100			620	70	1240	140				
	120			620	70	1690	191				
	160			620	70	1700	192				
32	80	4500	3500	1245	141	1830	207	0.988	2.87	35.4	25.0
	100			1245	141	2640	298				
	120			1245	141	3410	385				
	160			1245	141	4700	531				
40	80	4500	3000	2075	235	2760	312	2.559	7.42	56.7	40.0
	100			2610	295	4070	460				
	120			2610	295	5060	572				
	160			2610	295	7200	814				
50	80	3500	2500	3890	440	5110	577	7.730	22.42	87.8	62.0
	100			4860	549	6500	735				
	120			4860	549	9500	1074				
	160			4860	549	13,100	1480				
65	80	3000	1800	7885	891	10,200	1153	30.516	88.50	212.0	150.0
	100			9010	1018	15,300	1729				
	120			9010	1018	19,300	2181				
	160			9010	1018	26,600	3005				

Maximum Output Torque Limit

This is the maximum allowable output torque that should be developed with dynamic torque at the input. Repetitive momentary or continuous running loads (T_1, T_2 and T_3) should not exceed this rating. (See fig. 1 & 2)

Ratios

Standard ratios are listed in the above tables. Other ratios may be available on a custom basis including special double ratios up to 40,000: 1 in certain sizes.

LOADING ANALYSIS

Normal operating conditions involve momentary peak torques substantially higher than constant speed running torques. These peak torques must be carefully considered when selecting a Harmonic Drive Gear Set.

To select from the ratings table, it is necessary to construct or estimate a torque speed profile diagram as in Figures 1 and 2.

Maximum Starting Torque T_1

The torque required to accelerate the driven components from rest to normal continuous running speed.

Normal Constant Speed Torque, T_2

Normal Maximum Stopping Torque, T_3

Maximum Momentary Torque, T_4

The peak torque generated by sudden shock loads such as emergency stops or crashes. Particularly severe conditions exist with high output inertias and stringent rapid stop requirements.

For applications involving frequent fluctuations of speed or torque, calculate the mean speed N & mean torque T from the following equations.

For constant speed applications it is permissible to use the normal running torque T_2 from fig. 1 and normal input running speed from fig. 2.

Mean Torque, T
Calculate the mean torque.

$$T=\sqrt[3]{\frac{t_1N_1T_1^3+t_2N_2T_2^3+t_3N_3T_3^3}{t_1N_1+t_2N_2+t_3N_3}}$$

Mean Speed, N
Calculate the mean speed.

$$N=\frac{t_1N_1+t_2N_2+t_3N_3}{t_1+t_2+t_3}$$

Figure 1: Torque Profile

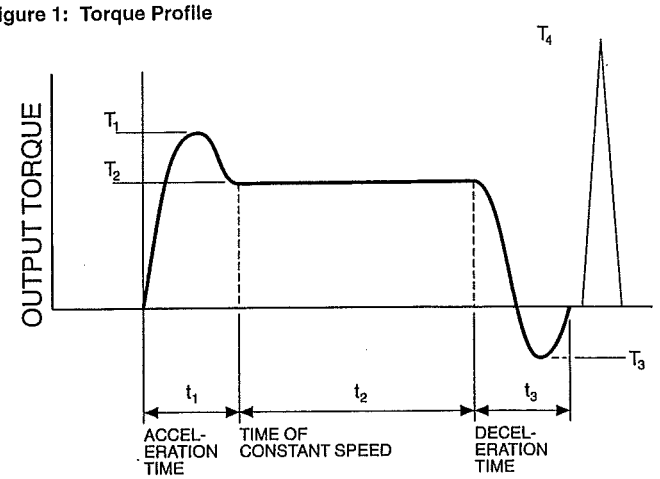

Figure 2: Speed Profile

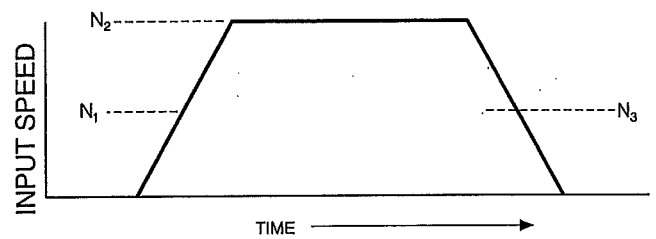

RATINGS AND OPERATING LIFE

The operating life expectancy of Pancake Gear Sets is based on the life of the ball bearings used for the input wave generator when run continuously at rated torque. If gear sets are properly mounted and lubricated, gear tooth life will be in excess of bearing life, provided maximum torque and speed limits are not exceeded. Flexspline life is infinite provided concentricity requirements are maintained. Ratings listed are for a continuous input speed of 1,750 RPM and L_{10} life of 3,000 hours. Average life, however, is 5 times this number.

Quick Selection

To make a quick selection from the ratings table for input speeds other than 1,750 RPM:

1) Calculate or estimate mean speed, N, and mean torque, T.

2) Calculate the equivalent 1,750 RPM rating, Tr.

$$T_r=\left[\frac{N}{1750}\right]^{1/3} \times T$$

3) Select a suitable gear set from the 1,750 rating table (T1750)— one which has a rating equal to or greater than Tr.

4) Calculate expected life.

$$L_{10}=\left[\frac{\text{LISTED RATING @ 1750RPM}}{T_r}\right]^3 \times 3000 \text{ HOURS}$$

The torque rating of a gear set can be estimated for any input speed by multiplying the listed rated torque at 1750 RPM by the rating factor shown in graph figure 3.

EXAMPLE

The output torque rating of HDR 40, ratio 120:1 at 2500 RPM for a L_{10} life of 5000 hours.

Rating factor from graph 0.74
Rated torque HDR 40 @ 1750 RPM = 2610 lb. in.

Rating at 2500 RPM = 2610x0.74 = 1931 lb. in. for 5000 hours L_{10} life.

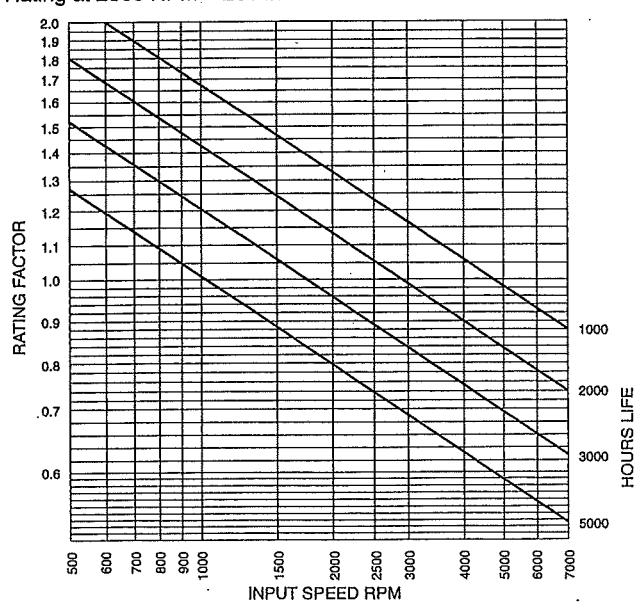

Backlash
Backlash is measured at the output (dynamic circular spline) with the static circular spline and the input wave generator locked. Typical measured values for each size are shown in the chart figure 3 low backlash options are available to order but must be designated K_2.

Figure 3

SIZE HDR, HDA & HDF		14	20	25	32	40	50	65
MAX BACKLASH	STANDARD	30	30	28	24	24	23	23
ARC MIN	OPTIMIZED K_2	1.5	1.5	1.5	1.5	1.5	1.5	1.5

Torsional Spring Rate
A torque applied to the output of a gearset with the input locked, creates a deflection which can be represented by a torque torsion graph with two distinct slopes A and B (see figure 4)

A low torque, Ts creates a non linear deflection, which is sometimes referred to as soft wind up. see slope A Optimized K_2 pancake gear sets have the slope A values listed in figure 5.

Torsional Spring Rate HDR & HDA
Figure 5

SIZE		20	25	32	40	50	65
	Ts lb in	18.0	44.0	78.0	150.0	304.0	700.0
	Ts Nm	2.0	5.0	5.0	17.0	34.0	79.0
OPTIMIZED SLOPE A (K_2)	lb in/RAD	$7.2X10^4$	$14X10^4$	$25X10^4$	$54X10^4$	$106X10^4$	$230X10^4$
	Nm/RAD	$0.81x10^4$	$1.6x10^4$	$2.8x10^4$	$6.1x10^4$	$12x10^4$	$26x10^4$

Figure 4: Torque - Torsion Graph

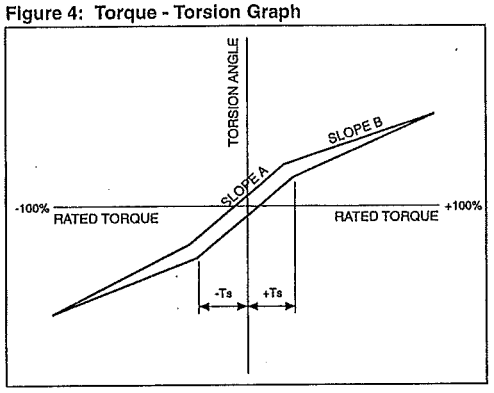

ALIGNMENT & ASSEMBLY

Pancake gear sets are supplied as components only and are not self contained power transmissions. Suitable housings with bearing supports oil reservoirs and seals must be provided.

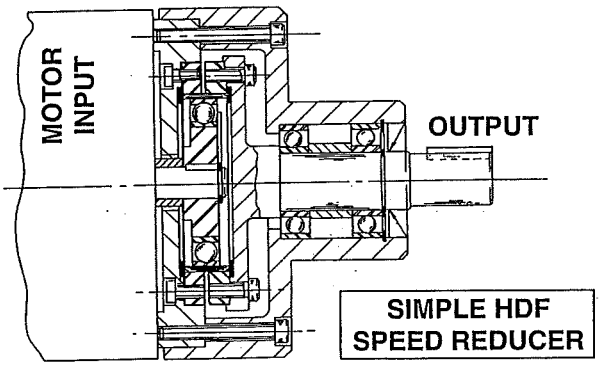

Circular Splines
Must be mounted with suitable bearing arrangement or rotationally fixed to maintain the concentricity tolerances specified on the drawing under all load conditions.

Overhung loads from an external source require a suitable two bearing or four point contact bearing support.

Axial restraint in both directions must maintain the specified gap between the two circular splines.

Note: Static Spline marked S. Dynamic Spline marked D. will only give configuration below if mounted in correct position.

ROTATIONS

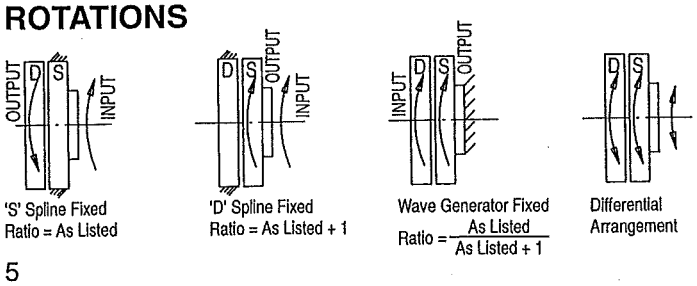

Flexspline
Two hardened washers are provided to prevent axial displacement of the flexspline.

These may be discarded if the customer supplied components in the vicinity of the flexspline are a minimum hardness of Rc45.

Wave Generator
Except in very special cases the wave generator bearing should not be used to support a shaft (consult factory). Axial restraint in both directions must be provided.

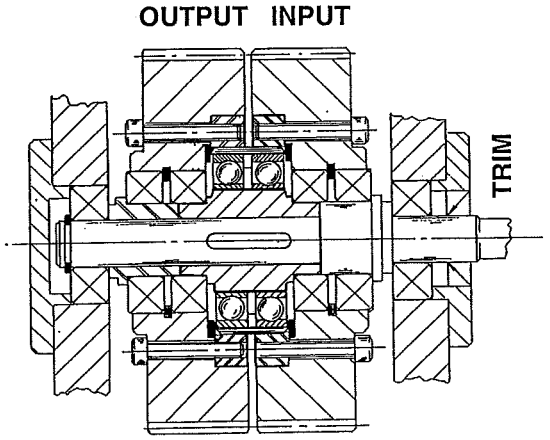

PHASE ADJUSTMENT WITH HDA

Use high-strength alloy steel screws tightened to manufacturer's recommended torque specifications. Loctite or some other means to prevent loosening is also recommended. Typical tightening torques for high-tensile socket cap-head screws are as follows:

Screw Size		M2	M3	M4	M5	M6	M8	M10	M12
Tightening	lb-in	5.3	19	41	85	140	350	680	1200
Torque	Nm	0.6	2.1	4.6	9.5	16	39	77	135

HDF DIMENSIONS

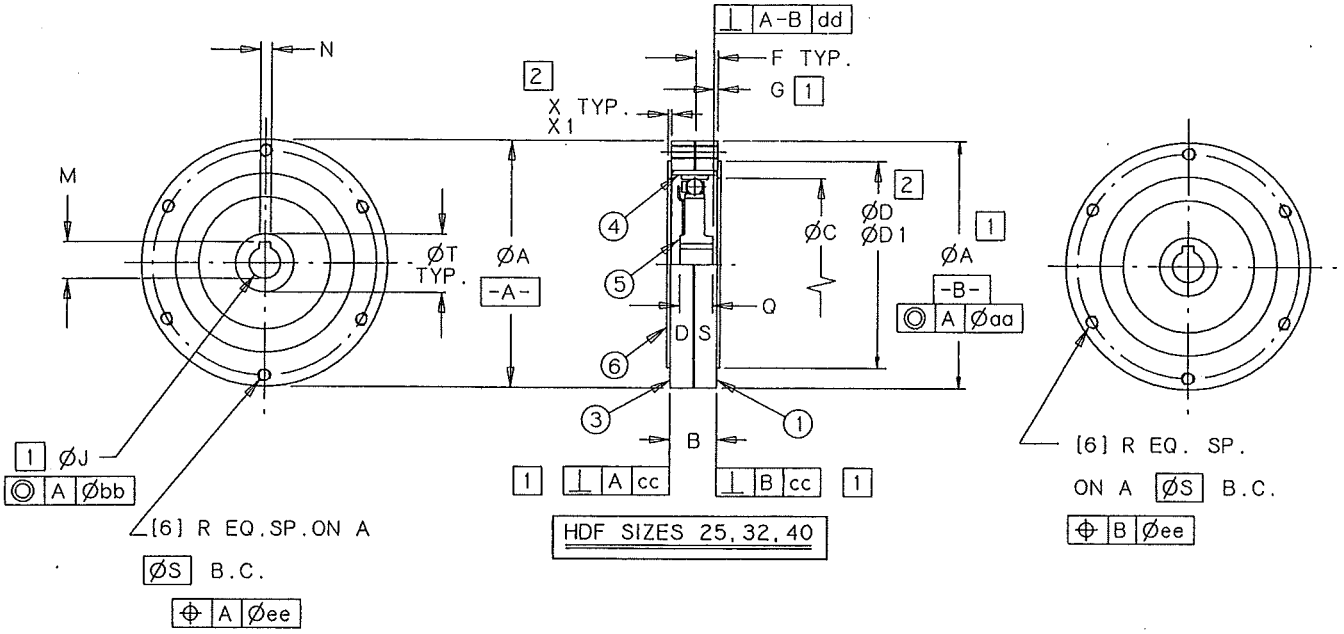

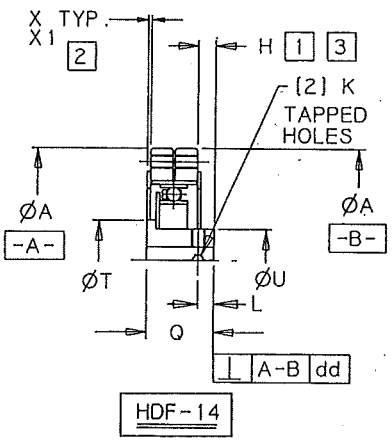

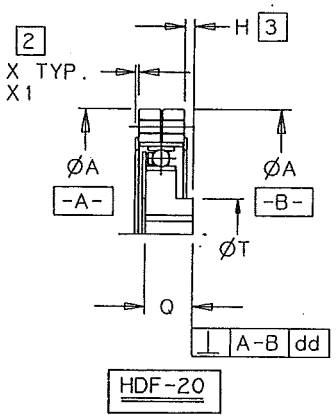

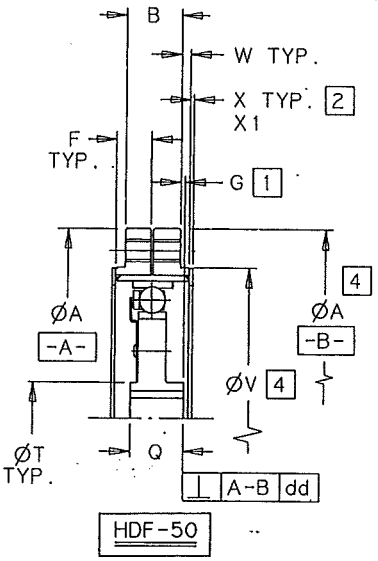

HDF

NOTE: ALL DIMENSIONS IN MM

	UNIT SIZE					
	14	20	25	32	40	50
ØA	$50^{-0.015}_{-0}$	$70^{-0.018}_{-0}$	$85^{-0.023}_{-0}$	$110^{-0.025}_{-0}$	$135^{-0.025}_{-0}$	$170^{-0.025}_{-0}$
B	$10.7^{\pm0.15}$	$12.7^{\pm0.15}$	$17.0^{\pm0.25}$	$21.0^{\pm0.25}$	$27.0^{\pm0.30}$	$25.0^{\pm0.30}$
ØC	$32^{\pm0.51}$	$47^{\pm0.51}$	$59^{\pm0.51}$	$77^{\pm0.51}$	$95^{\pm0.51}$	$119^{\pm0.51}$
ØD	$39.5^{\pm0.51}$	$54^{\pm0.51}$	$69.4^{\pm0.51}$	$92.1^{\pm0.51}$	$111.1^{\pm0.51}$	$134.4^{\pm0.51}$
ØD1	$40.2^{\pm0.51}$	$54.7^{\pm0.51}$	$70.2^{\pm0.51}$	$92.9^{\pm0.51}$	$111.9^{\pm0.51}$	$135.2^{\pm0.51}$
F	$5^{\pm0.1}$	$6^{\pm0.1}$	$8^{\pm0.2}$	$10^{\pm0.2}$	$13^{\pm0.2}$	$16^{\pm0.2}$
G	—	—	$.38^{\pm0.38}$	$.94^{\pm0.38}$	$1.8^{\pm0.38}$	$1.12^{\pm0.38}$
H	$3.76^{\pm0.38}$	$.94^{\pm0.38}$	—	—	—	—
ØJ	$6^{+0.012}_{-0}$	$9^{+0.015}_{-0}$	$11^{+0.018}_{-0}$	$14^{+0.020}_{-0}$	$14^{+0.020}_{-0}$	$19^{+0.020}_{-0}$
K	M3 x 0.5	—	—	—	—	—
L	$3.5^{\pm0.38}$	—	—	—	—	—
M	—	$10.4^{+0.10}_{-0}$	$12.8^{+0.010}_{-0}$	$16.3^{+0.010}_{-0}$	$16.3^{+0.010}_{-0}$	$21.8^{+0.010}_{-0}$
N	—	$3^{\pm0.0125}$	$4^{\pm0.013}$	$5^{\pm0.013}$	$5^{\pm0.013}$	$6^{\pm0.015}$
Q	15.0	11.4	12.8	15.6	19.4	23.2
R	M3 x 0.5	M4 x 0.7	M5 x 0.8	M6 x 1.0	M8 x 1.25	M10 x 1.5
S	44	60	75	100	120	150
ØT	18	20	28	36	32	50
ØU	14	—	—	—	—	—
ØV	—	—	—	—	—	$135^{-0.025}$
W	—	—	—	—	—	$4.52^{\pm0.1}$
X	$.81^{\pm0.13}$	$.81^{\pm0.13}$	$.81^{\pm0.13}$	$.81^{\pm0.13}$	$1.57^{\pm0.13}$	$1.57^{\pm0.13}$
X1	$.94^{+0.13}_{-0}$	$.94^{+0.13}_{-0}$	$.94^{+0.13}_{-0}$	$.94^{+0.13}_{-0}$	$1.70^{+0.13}_{-0}$	$1.70^{+0.13}_{-0}$
aa	0.050	0.07	0.076	0.078	0.088	0.098
bb	0.013	0.013	0.015	0.015	0.018	0.020
cc	0.018	0.018	0.023	0.025	0.025	0.025
dd	0.010	0.010	0.013	0.013	0.013	0.015
ee	0.25	0.25	0.25	0.25	0.25	0.25
WEIGHT lb/kgf	0.2/0.09	0.7/0.32	1.3/0.59	2.3/1.04	4.4/2.00	7.3/3.31

A. Item ① Static circular spline Marked 'S'

Item ② Only appears with HDR & HDA

Item ③ Dynamic circular spline Marked 'D'

Item ④ Flexspline

Item ⑤ Wave Generator

Item ⑥ Hardened wear washer. See ass'y notes pg. 5

B. Dimensions marked 1 established interface and installation requirements and must be maintained under all operating conditions. See ass'y notes pg. 5

C. Dimensions marked 2 are to locate wear washers, item 6 in correct position. See ass'y notes pg. 5

D. HDF 50 can be located on the outside diameter of the circular spline dimension A or on the pilot diameter dimension V.

HDR DIMENSIONS

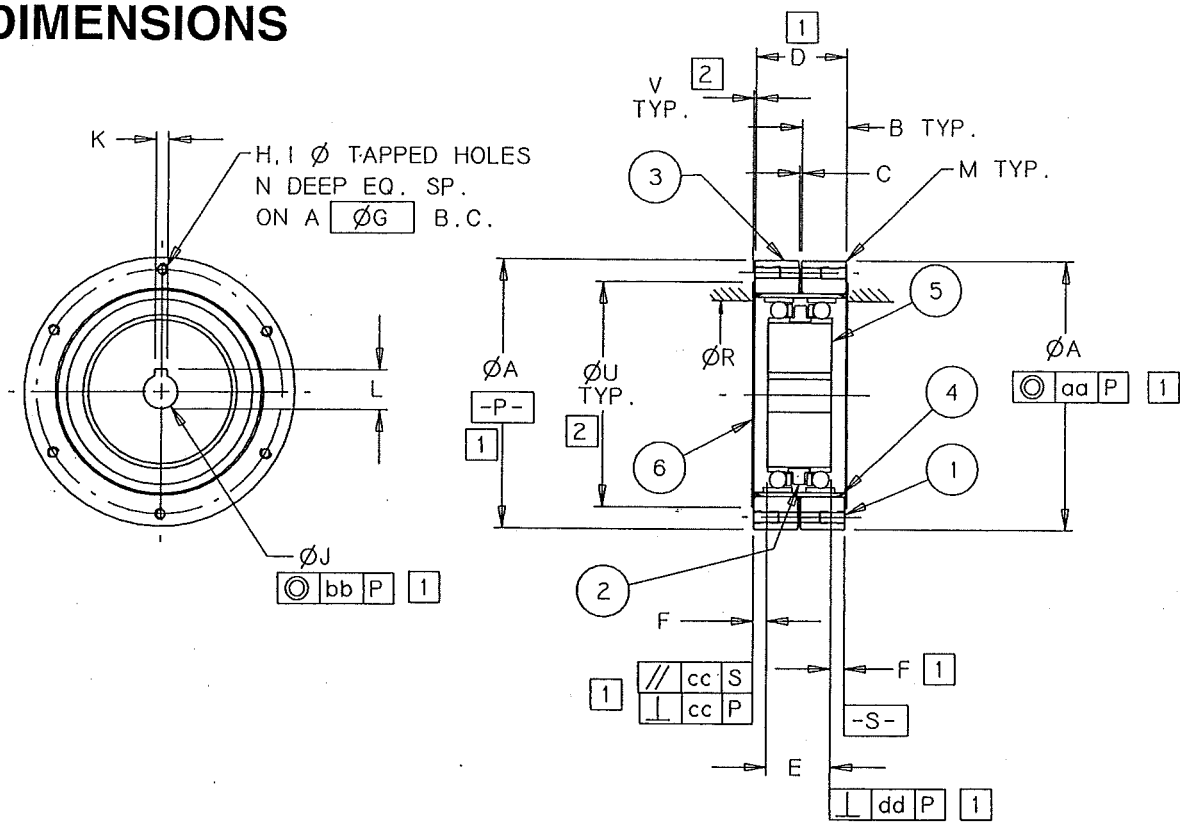

NOTE: ALL DIMENSIONS IN MM

	UNIT SIZE					
	20	25	32	40	50	65
ØA	$70^{-0.019}_{-0}$	$85^{-0.022}_{-0}$	$110^{-0.022}_{-0}$	$135^{-0.025}_{-0}$	$170^{-0.025}_{-0}$	$215^{-0.029}_{-0}$
B	12	14	18	21	26	35
C	1	1	1	1	1	1
D	25	29	37	43	53	71
E	17.3	20	25.9	31.5	39.1	50.5
F	3.85	4.5	5.55	5.75	6.95	10.25
GØ	60	75	100	120	150	195
H	6	6	6	6	6	6
I	M3-.5	M4-.7	M5-.8	M6-1	M8-1.25	M10-1.5
JØ	$9^{+0.015}_{+0}$	$11^{+0.018}_{+1}$	$14^{+0.018}_{+0}$	$14^{+0.018}_{+0}$	$19^{+0.021}_{+0}$	$24^{+0.021}_{+0}$
K	$3^{\pm0.0125}$	$4^{\pm0.0150}$	$5^{\pm0.0150}$	$5^{\pm0.0150}$	$6^{\pm0.0150}$	$8^{\pm0.0180}$
L	10.4	12.8	16.3	16.3	21.8	27.3
M	0.4	0.4	0.4	0.4	0.4	0.4
N	6	8	10	12	16	20
RØ	47	59	77	95	119	150
UØ	54.8	69.7	92.6	111.4	135	177
V	$1^{+0.13}$	$1^{+0.13}$	$1^{+0.13}$	$1.78^{+0.13}$	$1.78^{+0.13}$	$1.78^{+0.13}$
aa	0.016	0.016	0.017	0.019	0.024	0.027
dd	0.010	0.012	0.012	0.012	0.015	0.015
cc	0.017	0.024	0.026	0.026	0.028	0.034
bb	0.013	0.016	0.016	0.017	0.021	0.025
WEIGHT KGF	0.5	0.8	1.7	3.0	6.0	12.0
WEIGHT LB	1.1	1.8	3.7	6.6	13.2	26.5

A. Item ① Static circular spline
Marked 'S'

Item ② Spacer

Item ③ Dynamic circular spline
Marked 'D'

Item ④ Flexspline

Item ⑤ Wave Generator

Item ⑥ Wear Washers.
See ass'y notes pg. 5

B. Dimensions marked 1 established interface and installation requirements and must be maintained under all operating conditions. See ass'y notes pg. 5

C. Dimensions marked 2 are necessary to locate wear washers, item ⑥ in correct position.
See ass'y notes pg. 5

HDA DIMENSIONS

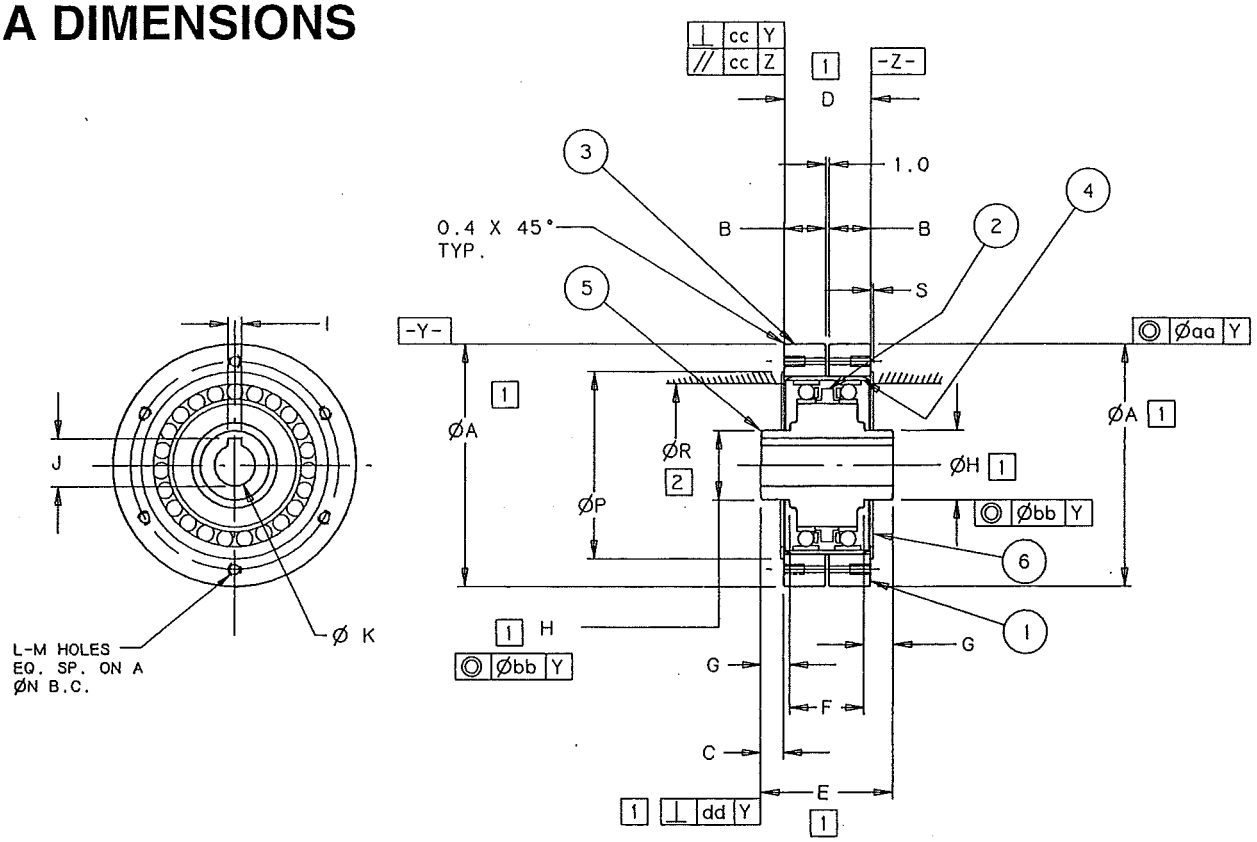

NOTE: ALL DIMENSIONS IN MM

	UNIT SIZE					
	20	25	32	40	50	65
AØ	$70^{-0.010}_{-0.040}$	$85^{-0.012}_{-0.047}$	$110^{-0.012}_{-0.047}$	$135^{-0.014}_{-0.054}$	$170^{-0.014}_{-0.054}$	$215^{-0.015}_{-0.061}$
B	12	14	18	21	26	35
C	6.5	5.5	6.5	12.5	12.5	8
D	25	29	37	43	53	71
E	38	40	50	68	78	87
F	21.5	25	30	44	54	59
G	8.25	7.5	10	12	12	14
HØ	$20^{+0.009}_{-0.004}$	$30^{+0.009}_{-0.004}$	$40^{+0.011}_{-0.005}$	$50^{+0.011}_{-0.005}$	$60^{+0.012}_{-0.007}$	$70^{+0.012}_{-0.007}$
I	$4^{\pm0.015}$	$6^{\pm0.015}$	$8^{\pm0.018}$	$10^{\pm0.018}$	$12^{\pm0.0215}$	$14^{\pm0.0215}$
J	13.8	22.8	33.3	38.3	43.3	53.8
KØ	$12^{+0.018}$	$20^{+0.021}$	$30^{+0.021}$	$35^{+0.025}$	$40^{+0.025}$	$50^{+0.025}$
L	6	6	6	6	6	6
M	M3 X 6 DP	M4 X 8 DP	M5 X 10 DP	M6 X 12 DP	M8 X 16 DP	M10 X 20 DP
NØ	60	75	100	120	150	195
PØ	$54^{\pm0.5}$	$69.4^{\pm0.5}$	$92^{\pm0.5}$	$111^{\pm0.5}$	$134.4^{\pm0.5}$	$176^{\pm0.5}$
RØ	47	59	77	95	119	150
S	0.8	0.8	0.8	1.6	1.6	1.6
aa	0.016	0.016	0.017	0.019	0.024	0.027
bb	0.013	0.016	0.016	0.017	0.021	0.025
cc	0.017	0.024	0.026	0.026	0.028	0.034
dd	0.010	0.012	0.012	0.012	0.015	0.015
WEIGHT KGF	0.6	1.0	2.0	3.6	7.2	14
WEIGHT LB	1.3	2.2	4.4	7.9	16	31

A. Item ① Static circular spline
Marked 'S'

Item ② Spacer

Item ③ Dynamic circular spline
Marked 'D'

Item ④ Flexspline

Item ⑤ Wave Generator

Item ⑥ Wear Washers.
See ass'y notes pg. 5

B. Dimensions marked 1 established interface and installation requirements and must be maintained under all operating conditions.
See ass'y notes pg. 5

C. Dimensions marked 2 are necessary to locate wear washers, item ⑥ in correct position.
See ass'y notes pg. 5

HD 0078

EFFICIENCY

The efficiency of Pancake Gear Sets varies with speed, ratio, lubrication, and temperature. The following graphs show the approximate measured values of efficiency against percentage of rated torque. These values can be adjusted by a temperature factor (Graph 7); however, extremes of temperature or excessively low loading should be referred to our Engineering Department.

HDF

Graph 1: 500 RPM Input

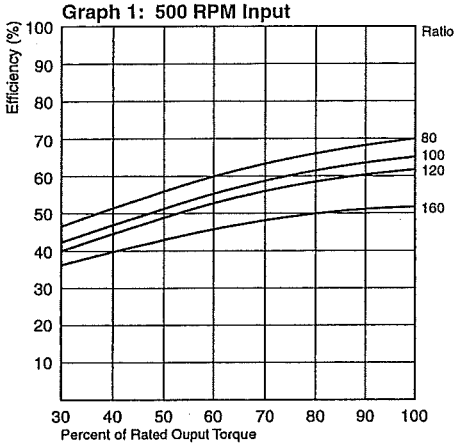

Graph 2: 2000 RPM Input

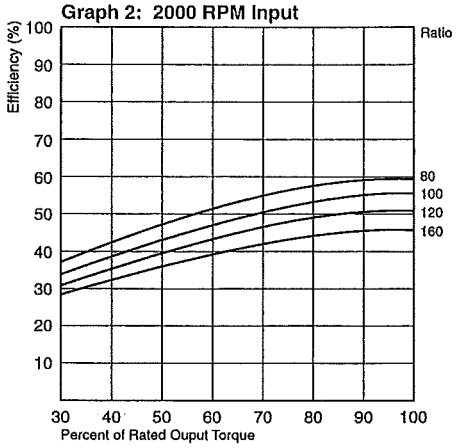

Graph 3: 3500 RPM Input

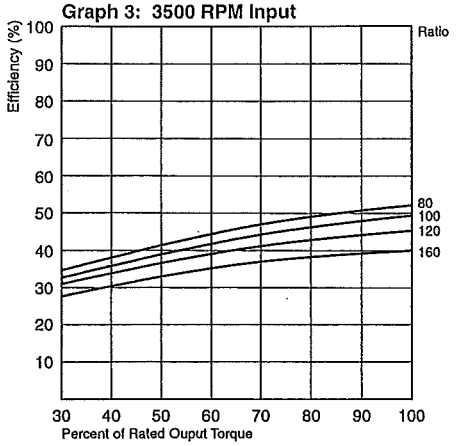

The efficiency of a gear set is defined as:

$$\text{Efficiency} = \left[\frac{\text{Torque Out}}{\text{Torque In x Ratio}}\right] \text{x } 100\%$$

Graphs 1-6 show efficiency against the percent of rated output torque used for any particular application and gear set size.

Example

Estimate the efficiency of an HDR 40 with 100:1 ratio which will transmit an output torque of 1800 lb. in with an input speed of 2000RPM.

1. From step 2 page 4

$$T_r = \left[\frac{2000}{1750}\right]^{1/3} \text{x } 1800 \text{ lb in} = 1881 \text{ lb in}$$

2. Rated torque a 1750 RPM from page 3 = 2610 lb. in.
3. Percent of rated torque used for application

$$= \left[\frac{1881}{2610}\right] \text{x } 100 = 72\%$$

4. From graph 5, efficiency a 72% of rated torque= 47%

HDR & HDA

Graph 4: 500 RPM Input

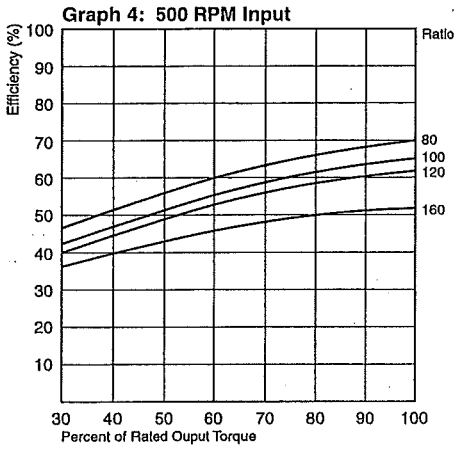

Graph 5: 2000 RPM Input

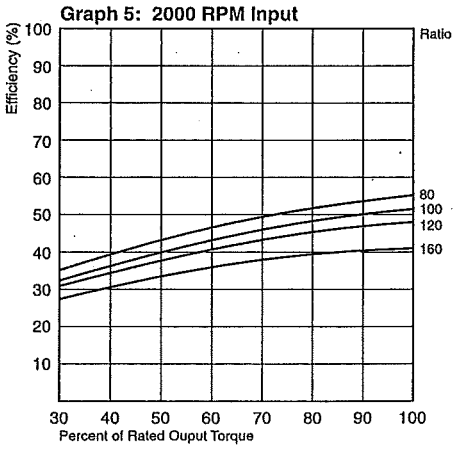

Graph 6: 3500 RPM Input

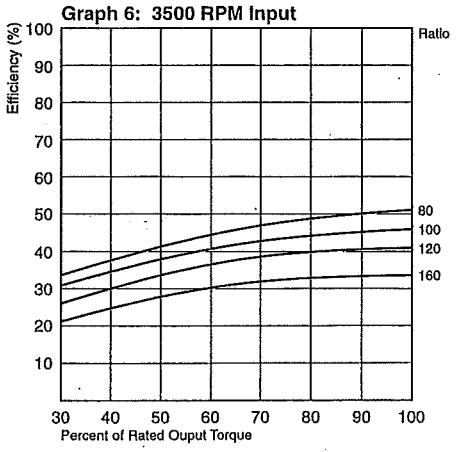

Graph 7: Temperature Factor

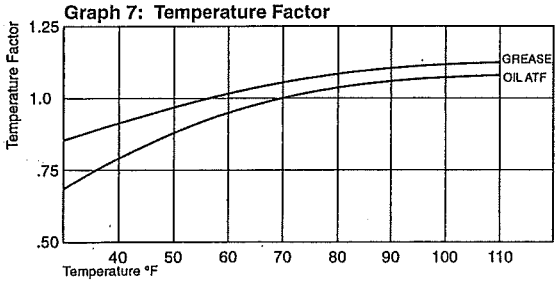

Multiply the efficiency from the graph 1-6 by the temperature factor from graph 7.

HDB Phasing Differential Gear Sets

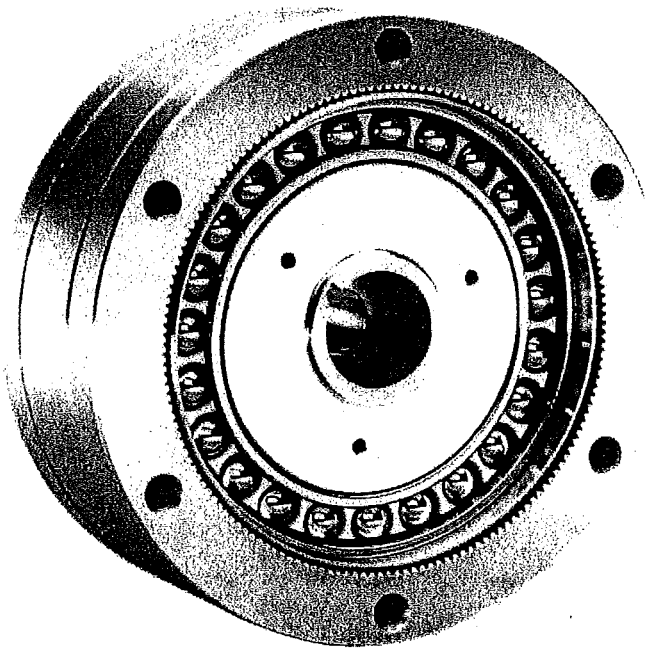

Features

- For dynamic registration of rotating elements
- A 1:1 differential with high-ratio trim adjustment
- Ideal differential for roll registration or angular shaft phasing
- Compact, low-backlash design for end-of-roll mounting

Harmonic Drive HDB gear sets allow easy and direct phasing of rotating elements and are ideally suited for web presses and other machines requiring constant monitoring and adjustment while they are in motion.

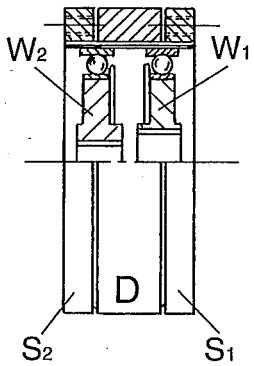

Drive Power

Essentially two HDF pancake gear sets mounted back to back with dynamic splines connected, the HDB provides a 1:1 through ratio from a primary drive source to secondary elements of a machine with optional speed or position adjustment.

Power is applied to S_1 the first of three ring gears called circular splines. Torque is transmitted from the first circular spline to the third circular spline S_2 through two gear ratios.

The first ratio is a slight speed increase between S_1 and the middle circular spline D.

The second ratio is a very slight speed reduction between the D spline and the S_2 circular spline.

When the two wave generators W_1 and W_2 are stationary, the increasing and decreasing ratios offset each other and the S_1 and S_2 circular splines rotate in the same direction and at the same speed. Power circulates from the S_1 input to the S_2 output at a 1:1 ratio with an efficiency of approximately 99%.

Trim

With one wave generator W_1 rotationally fixed, a second wave generator W_2 can be rotated to create, a high ratio advance or retardation (depending on direction) of S_2 relative to the S_1 circular spline.

Output speed or position can be accurately adjusted with the machine in motion. The output speed of S_2 while trim is being applied can be calculated with the following equation:

$$N_{S2} = N_{S1} \pm \left[\frac{N_{W2}}{(R+1)} \right]$$

Where N=speed
R=tabulated ratio

It is possible to attach both wave generators to different drive sources.

For example, W_2 could be driven by a servomotor for high speed automated trim and W_1 to a hand crank for low speed manual trim.

Sufficient holding torque must be applied to the trim shaft to prevent rotation. This can be calculated from the following equation

$$\text{Control Torque} = \frac{\text{System Output Torque (max)}}{\text{Ratio x 0.5}}$$

Ratio

Standard ratios are as shown in the rating table page 3, however, other ratios are available on a custom basis (consult our engineering department)

Ratings

Torque ratings are as the equivalent size HDF pancake gear set (see page 3).

RELATIVE TRIM DIRECTION

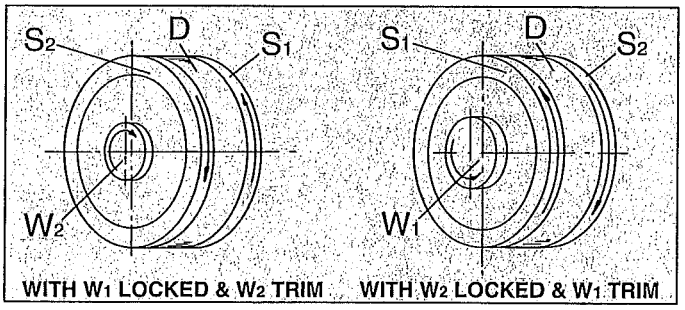

These examples show the displacement of the circular splines S_1 and S_2 **relative to each other** when the wave generator is rotated in the direction of the arrow. Actual rotational direction will depend on the direction of the main input drive.

HDB DIMENSIONS

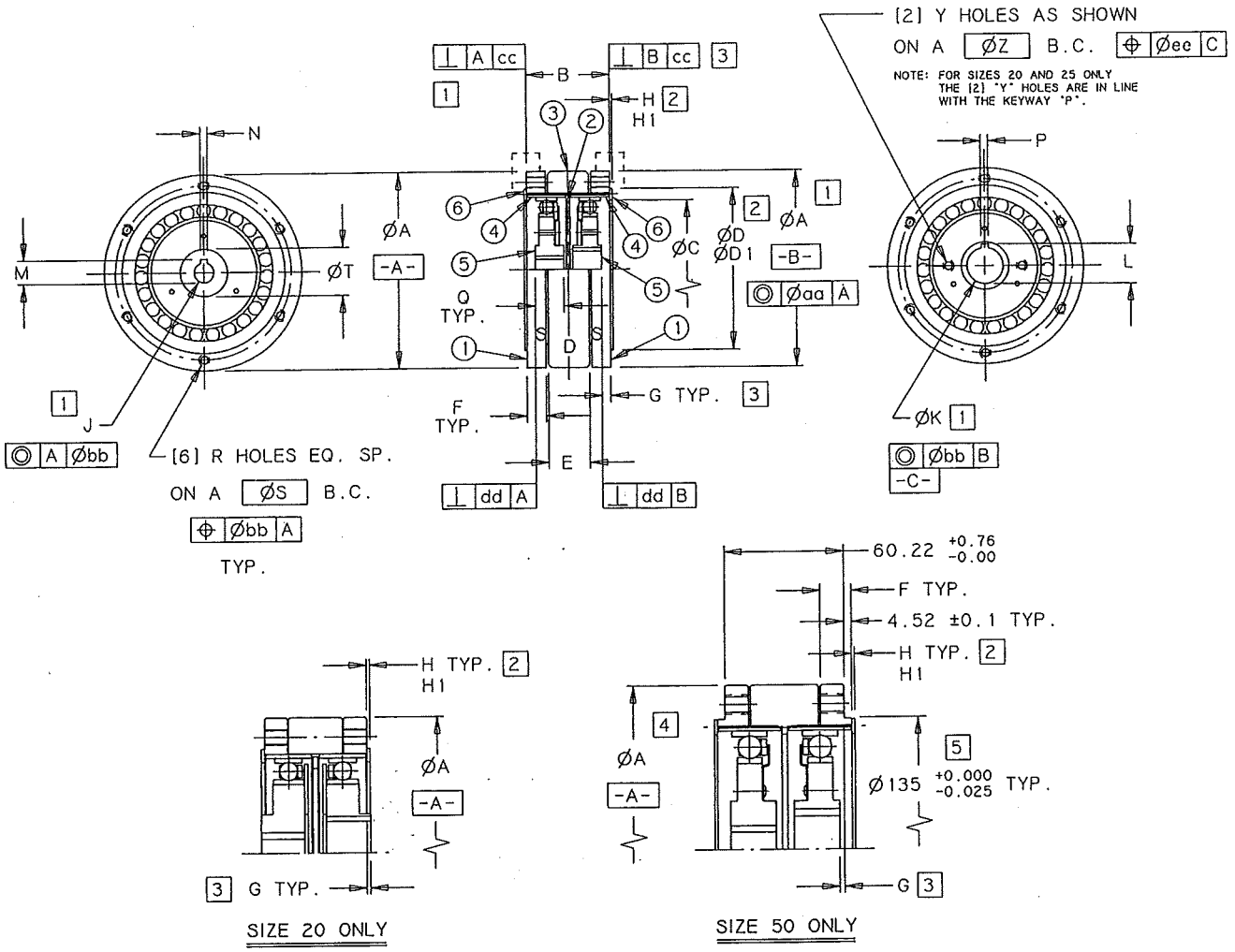

A. Item ① Static Circular Spline Marked 'S'

Item ② Spacer

Item ③ Dynamic Circular Spline Marked 'D'

Item ④ Flexspline

Item ⑤ Wave Generator

Item ⑥ Wear washer

B. Dimensions marked 1 established interface & installation requirements and must be maintained under all operating conditions

C. Dimensions marked 2 are necessary to locate wear washers item ⑥ in correct position See ass'y notes

	UNIT SIZE				
	20	25	32	40	50
ØA	$70^{-0.018}$	$85^{-0.022}$	$110^{-0.025}$	$134^{-0.025}$	$170^{-0.025}$
B	$26.5^{+0.25}$	$34.8^{\pm0.25}$	$42^{+0.6}$	$56.5^{+0.8}$	—
ØC	$47^{\pm0.51}$	$59^{\pm0.51}$	$77^{\pm0.51}$	$95^{\pm0.51}$	$119^{\pm0.51}$
ØD	$54^{\pm0.51}$	$69.4^{\pm0.51}$	$92.1^{\pm0.51}$	$111.1^{\pm0.51}$	$134.4^{\pm0.51}$
ØD1	$54.7^{+0.51}$	$70.2^{+0.51}$	$92.9^{+0.38}$	$92.9^{+0.38}$	$135.2^{+0.38}$
E	$14^{\pm0.1}$	$18^{\pm0.1}$	$20.9^{\pm0.1}$	$28^{\pm0.1}$	$35^{\pm0.2}$
F	$6^{\pm0.1}$	$8^{\pm02}$	$10^{\pm0.2}$	$13^{\pm0.2}$	$13^{\pm0.2}$
G	$1.8^{\pm.51}$	$3.27^{\pm.51}$	$3.95^{\pm.51}$	$1.95^{\pm.51}$	$1.4^{\pm.51}$
H	$.81^{\pm0.13}$	$.81^{\pm0.13}$	$.81^{\pm0.13}$	$1.57^{\pm0.13}$	$1.57^{\pm0.13}$
H1	$.94^{+0.13}$	$.94^{+0.13}$	$.94^{+.013}$	$1.69^{+0.13}$	$1.69^{+0.13}$
ØJ	$9^{+0.015}$	$11^{+0.018}$	$14^{\pm0.020}$	$14^{\pm0.020}$	$19^{\pm0.020}$
ØK	$16^{+0.013}$	$19^{+0.013}$	$25^{+0.020}$	$25^{+0.020}$	$35^{+0.023}$
L	$17.4^{\pm0.10}$	$20.8^{+0.10}$	$27.3^{+0.20}$	$27.3^{+0.20}$	$38.3^{+0.20}$
M	$10.4^{+0.10}$	$12.8^{+0.10}$	$16.3^{+0.10}$	$16.3^{+0.10}$	$21.8^{+0.10}$
N	$3^{\pm0.0125}$	$4^{\pm0.013}$	$5^{\pm0.013}$	$5^{\pm0.013}$	$6^{\pm0.013}$
P	$3^{\pm0.0125}$	$4^{\pm0.013}$	$5^{\pm0.013}$	$5^{\pm0.013}$	$10^{\pm0.023}$
Q	11.4	12.8	15.6	19.4	23.2
R	M4 x 0.7	M5 x 0.8	M6 x 1	M8 x 1.25	M10 x 1.5
ØS	60	75	100	120	150
ØT	20	28	36	32	50
Y	M4 x 0.7	M4 x 0.7	M6 x 1.0	M8 x 1.25	M8 x 1.25
ØZ	27	35	44	48	65
aa	0.07	0.076	0.078	0.088	0.098
bb	0.013	0.015	0.015	0.018	0.020
cc	0.018	0.023	0.025	0.025	0.025
dd	0.010	0.013	0.013	0.013	0.015
ee	0.250	0.250	0.250	0.250	0.250
WEIGHT lb/kgf	1.50/70	2.70/1.23	4.70/2.14	9.00/4.09	15.30/6.9

NOTE:
ALL DIMENSIONS IN MM

ALIGNMENT & ASSEMBLY

HDB differentials are supplied as component sets only and are not self contained power transmissions. Suitable housings with bearing supports, oil reservoirs and seals must be provided.

Circular Splines

Both S1 & S2 circular splines must be supported with a suitable bearing arrangement to maintain specified dimensions and tolerances under all load conditions.

Overhung loads from an external source require a suitable two bearing or four point contact bearing support.

Axial restraint in both directions must maintain the gap between each of the three circular splines.

Flexspline

Hardened wear washers are provided to prevent axial displacement of the flexspline. These may be discarded If the customer supplied components in the vicinity of the flexspline are a minimum hardness of Rc45.

Wave Generator

The wave generator bearings should not be used to support a shaft. Axial restraint in both directions should be provided.

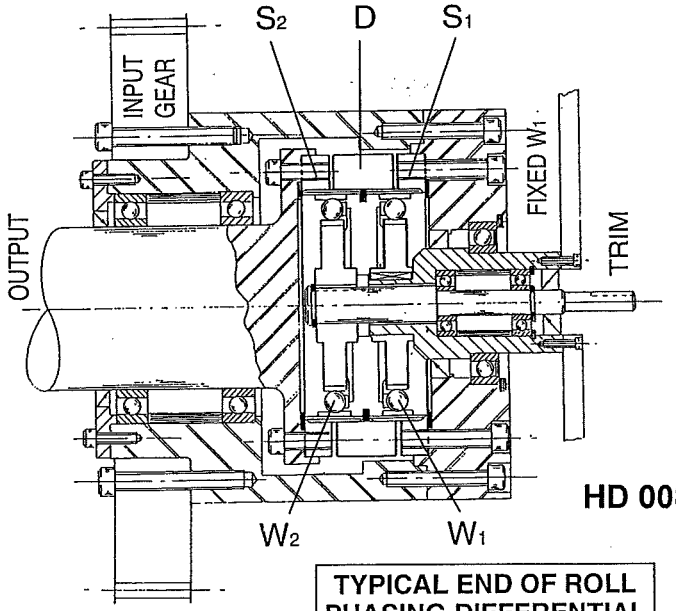

HD 0082

TYPICAL END OF ROLL PHASING DIFFERENTIAL

ORDERING DETAILS

OPTIONS—
DELETE IF NOT REQUIRED

STYLE — XX — YY — 2 — K_2 — SP

HDF
HDR
HDA
HDB

SIZE

RATIO

COMPONENTS

OPTIMIZED BACKLASH
& STIFFNESS

SPECIAL FEATURES
CUSTOMER TO SPECIFY

Harmonic Drive® TECHNOLOGIES

MADE IN USA

The information contained in this catalog may be subject to change without notice, consult factory.

Certified ISO 9001

nsai

I.S. EN ISO 9001

Harmonic Drive Technologies
Teijin Seiki Boston, Inc.
247 Lynnfield Street
Peabody, MA 01960
TEL: (508) 532-1800
FAX: (508) 532-9406

PCGS/10M 1/98B

Printed in USA

HD 0083

HDC CUP COMPONENT GEAR SET SELECTION GUIDE

Harmonic Drive® TECHNOLOGIES

HD 0084

PERFORMANCE DATA AND SELECTION GUIDE

This brochure provides technical specifications for Harmonic Drive Cup Component Gear Sets and offers a guide for correct size selection. More complex applications not covered in this brochure can be referred to our Engineering department.

HDC CUP COMPONENT GEAR SET

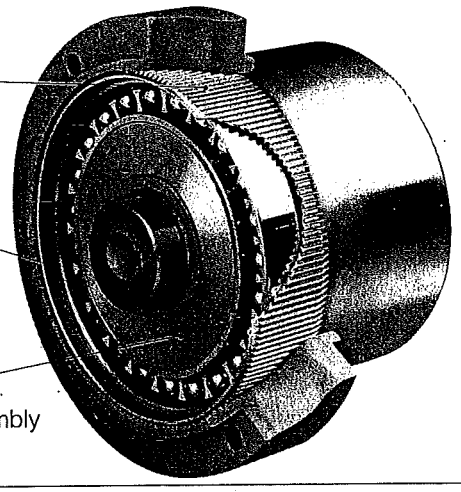

LOADING ANALYSIS

Normal operating conditions involve momentary peak torques substantially higher than constant speed running torques. These peak torques must be carefully considered when selecting a Harmonic Drive HDC Gear Set.

To select from the ratings table it is necessary to construct or estimate a torque speed profile diagram as in Figures 1 and 2.

Maximum Starting Torque, T_1
The torque required to accelerate the driven components from rest to normal continuous running speed.

Normal Constant Speed Torque, T_2

Normal Maximum Stopping Torque, T_3

Maximum Momentary Torque, T_4
The peak torque generated by sudden shock loads such as emergency stops or crashes. Particularly severe conditions exist with high output inertias and stringent rapid stop requirements.

Figure 1: Torque Profile

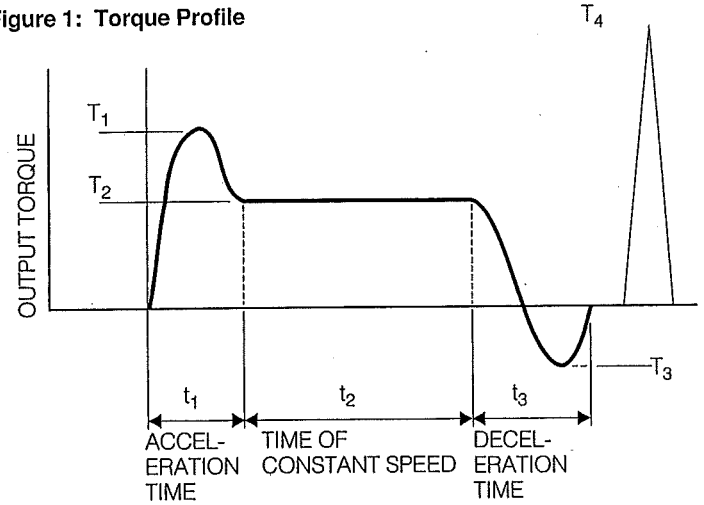

Figure 2: Speed Profile

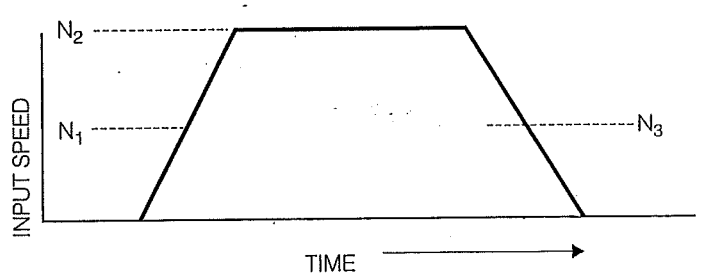

Mean Torque, T
Calculate the mean torque.

$$T=\sqrt[3]{\frac{t_1N_1T_1^3+t_2N_2T_2^3+t_3N_3T_3^3}{t_1N_1+t_2N_2+t_3N_3}}$$

Mean Speed, N
Calculate the mean speed.

$$N=\frac{t_1N_1+t_2N_2+t_3N_3}{t_1+t_2+t_3}$$

HD 0085

© 1993 Harmonic Drive Technologies

Harmonic Drive® TECHNOLOGIES

RATINGS TABLE

HDC SIZE	RATIO	RATED OUTPUT TORQUE @ 1750 RPM		MAXIMUM OUTPUT TORQUE		STATIC TORQUE LIMIT		RATCHET TORQUE LIMIT		MAX INPUT SPEED (RPM)		STANDARD W/G INPUT INERTIA	NO-LOAD STARTING TORQUE
		lb-in	Nm	lb-in	Nm	lb-in	Nm	lb-in	Nm	Oil	Grease	lb-in² (kg-cm²)	oz-in (N-cm)
10	**60**	30	3.4	30	3.4	50	5.7	50	5.7	15000	7500	0.0021 (0.0062)	0.6 (0.4)
	80	40	4.5	40	4.5	70	7.9	80	9.0				
14	**60**	102	11.5	119	13.4	202	22.8	140	15.8	12000	6000	0.0114 (0.0332)	1.0 (0.7)
	72	102	11.5	119	13.4	202	22.8	200	22.6				
	80	102	11.5	140	15.8	238	26.9	200	22.6				
	100	102	11.5	180	20.3	306	34.6	200	22.6				
20	**50**	350	40.0	470	53.1	1280	145	1120	127	11200	5600	0.068 (0.199)	2.5 (1.8)
	60	355	40.1	470	53.1	1280	145	1120	127				
	80	355	40.1	470	53.1	1240	140	1260	142				
	100	375	42.4	690	78	1620	183	1260	142				
	120	375	42.4	900	102	1970	223	1260	142				
	160	375	42.4	1120	127	2480	280	1120	127				
25	**50**	600	68	830	94	2570	290	1580	179	9000	4500	0.170 (0.494)	5.0 (3.5)
	60	620	70	830	94	2570	290	1580	179				
	80	620	70	830	94	2310	261	2050	232				
	100	620	70	1240	140	3050	345	2050	232				
	120	620	70	1690	191	3800	429	2050	232				
	160	620	70	1700	192	4650	525	1900	215				
	180	620	70	1580	178	5060	572	1580	178				
	200	620	70	1580	178	5320	601	1580	178				
32	**50**	1200	136	1830	207	4920	556	4000	452	7000	3500	0.55 (1.60)	11.0 (7.8)
	60	1245	140	1830	207	4920	556	4000	452				
	80	1245	140	1830	207	4520	511	5000	565				
	100	1245	140	2640	298	5800	655	5000	565				
	120	1245	140	3410	385	7220	816	5000	565				
	160	1245	140	4700	531	9190	1038	4700	531				
	180	1245	140	4000	452	9950	1124	4000	452				
	200	1245	140	4000	452	10610	1199	4000	452				
40	**50**	2000	226	2760	312	7330	828	6600	746	5600	2800	1.50 (4.36)	20 (14.1)
	60	2075	234	2760	312	7330	828	6600	746				
	80	2075	234	2760	312	6980	789	9000	1017				
	100	2610	295	4070	460	9450	1068	9000	1017				
	120	2610	295	5060	572	11120	1256	8300	938				
	160	2610	295	7200	813	14640	1654	7200	813				
	180	2610	295	6600	746	15790	1784	6600	746				
	200	2610	295	6600	746	17010	1922	6600	746				
50	**50**	3800	430	5110	577	13910	1571	15500	1751	4500	2250	4.3 (12.51)	40 (28.3)
	60	3890	440	5110	577	13910	1571	15500	1751				
	80	3890	440	5110	577	13060	1475	19000	2147				
	100	4860	549	6500	734	16860	1904	19000	2147				
	120	4860	549	9500	1073	20900	2361	17000	1921				
	160	4860	549	13100	1480	26830	3031	17000	1921				
	180	4860	549	15500	1751	28830	3257	15500	1751				
	200	4860	549	15500	1751	31190	3524	15500	1751				
65	**50**	7880	890	10200	1152	27750	3135	24000	2711	3500	1750	15.54 (45.21)	88 (92.1)
	60	7880	890	10200	1152	27750	3135	24000	2711				
	80	7880	890	10200	1152	26350	2977	30000	3389				
	100	9010	1018	15300	1728	36130	4082	30000	3389				
	120	9010	1018	19300	2180	42370	4787	27000	3050				
	160	9010	1018	26600	3005	54510	6158	24000	2711				
	180	9010	1018	24000	2711	59210	6690	24000	2711				
	200	9010	1018	24000	2711	64040	7235	24000	2711				
80	**50**	13700	1547	18200	2056	48000	5423	50000	5649	2800[1]	1400[1]	50.4 (146.7)	160 (113)
	60	13715	1550	18200	2056	48000	5423	50000	5649				
	80	13715	1550	18200	2056	45640	5156	65000	7343				
	100	17780	2009	26000	2937	61800	6982	65000	7343				
	120	17780	2009	33600	3796	74500	8416	60000	6778				
	160	17780	2009	47900	5411	98830	11165	55000	6213				
	180	17780	2009	50000	5648	107870	12186	50000	5648				
	200	17780	2009	50000	5648	115180	13012	50000	5648				
100	**80**	28000	3163	36200	4090	72400	8179	120000	13557	2250[1]	1125[1]	118 (343.3)	300 (212)
	100	28000	3163	48400	5468	96800	10936	120000	13557				
	120	28000	3163	59500	6722	119000	13444	110000	12427				
	160	28000	3163	77700	8778	155400	17556	110000	12427				
	200	28000	3163	89200	10077	178400	20155	83000	9377				
	320	28000	3163	83000	9377	178400	20155	83000	9377				

NOTES: 1) Thermal limitation: Consult factory for recommended duty cycle.

HD 0086

DEFINITIONS

Ratio
The optimum ratio for a particular application is usually dependent upon the requirements of the drive system. In general, however,

- Stiffness or spring rate is greater with ratios 80:1 and higher
- Efficiency decreases as ratio increases
- Positional accuracy is not a function of ratio
- Standard ratios are shown in bold type in the ratings table
- Many unlisted ratios above 50:1 are available. Consult our Engineering department for availability.

Maximum Output Torque Limit
This is the maximum allowable output torque that should be developed with dynamic torque at the input. Repetitive momentary or continuous running loads (T_1, T_2, and T_3) should not exceed this rating.

Static Torque Limit
This is the maximum allowable torque that should be applied to the output when the input is locked. A typical example is the torque applied to the output during a work or machining operation when the Harmonic Drive is stationary.

Ratchet Torque Limit
Under severe dynamic overload conditions, the pressure angles of the gear teeth produce separating forces which result in radial deflection at the tooth mesh. This deflection prevents correct movement of the teeth and causes the flexspline to move off center by one tooth. This phenomenon is called ratcheting and can be avoided by operating the gear set within the ratchet torque limit.

Such overloads typically occur during severe emergency stop conditions or by "crashing" the output drive during rotation. Ratcheting does not result in immediate failure of the gear set but causes poor performance and premature failure of the gear teeth and should, therefore, be avoided. If ratcheting is suspected, the assembly should be checked for the "dedoidal" condition described on Page 12.

Maximum Input Speed
The maximum input speed for an HDC Gear Set is limited by the DN value of the wave generator bearing and the type of lubricant used. Maximum input speeds for each size unit using recommended grease or oil lubricant are listed in the ratings table.

PROPER PERFORMANCE CAN ONLY BE ASSURED BY ADHERING TO STATED LIMITS.

RATINGS AND OPERATING LIFE

The operating life expectancy of HDC Gear Sets is based on the life of the ball bearings used for the input wave generator when run continuously at rated torque. If gear sets are properly mounted and lubricated, gear tooth life will be well in excess of bearing life, provided maximum torque and speed limits are not exceeded. Flexspline life is infinite provided concentricity requirements are maintained. Ratings listed are for a continuous input speed of 1,750 RPM and an L_{10} life of 3,000 hours. Average life, however, is 5 times this number.

Torque ratings for speeds other than 1,750 RPM can be calculated by the following equations:

$$\text{Rating @ N RPM} = \left[\frac{1750}{N}\right]^{1/3} \times \text{[listed rating @ 1750 RPM]}$$

and predicted life by

$$L_{10} = \left(\frac{1750}{N}\right)\left[\frac{\text{listed rating @ 1750 RPM}}{T}\right]^3 \times 3000 \text{ hours}$$

Where T = mean torque
N = mean speed

Quick Selection

To make a quick selection from the ratings table for input speeds other than 1,750 RPM:

1) Calculate or estimate mean speed, N, and mean torque, T.

2) Calculate the equivalent 1,750 RPM rating, Tr.

$$Tr = \left[\frac{N}{1750}\right]^{1/3} \times T$$

3) Select a suitable gear set from the 1,750 RPM rating table (T1750) — one which has a rating equal to or greater than Tr.

4) Calculate expected life.

$$L_{10} = \left[\frac{\text{listed rating @ 1750 RPM}}{Tr}\right]^3 \times 3000 \text{ hours}$$

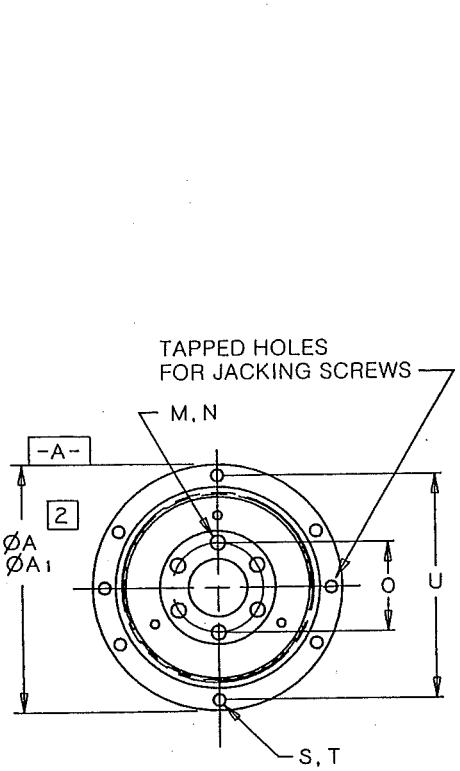

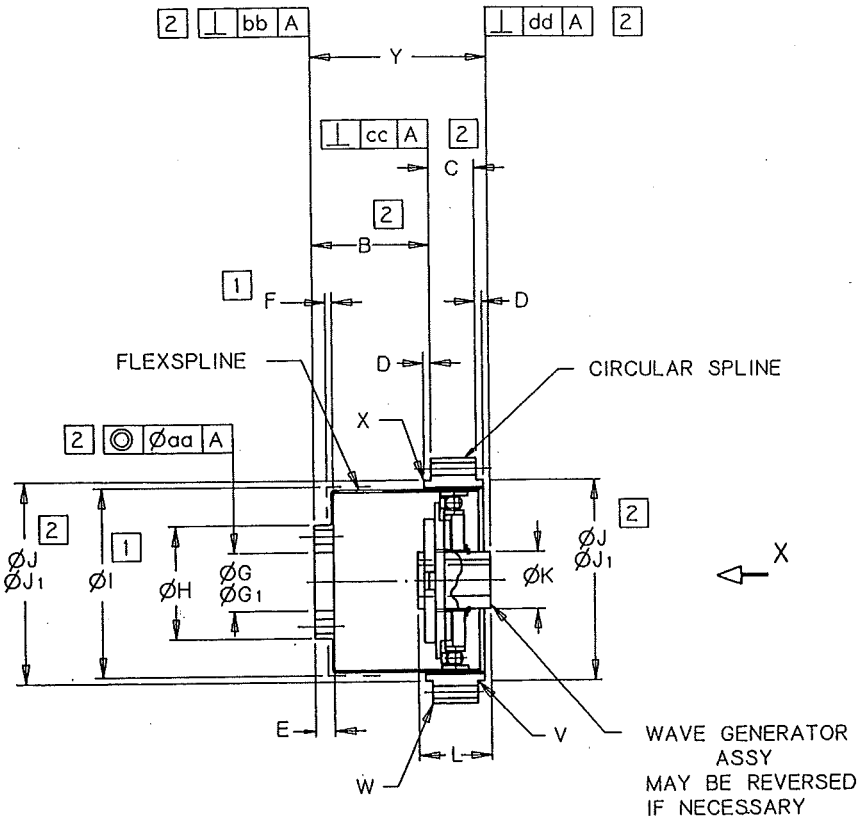

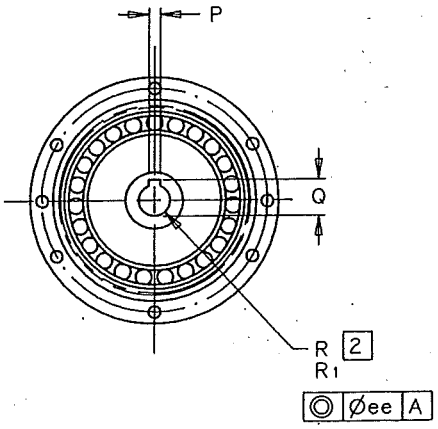

VIEW ON "X"
SIZES 20-100

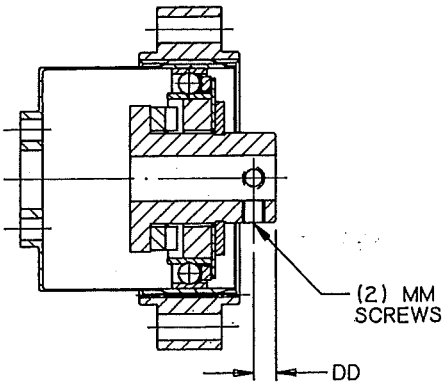

INPUT FIXING FOR SIZES 10-14

NOTE: DOES NOT HAVE KEYWAY.

	UNIT SIZE	
DIM.	10	14
DD	2	3
MM	M2.5X0.45	M3X0.5

Note: Dimensions marked 1 denote maximum extent of encroachment of adjoining structure.

HD 0088

	UNIT SIZE									
	10	14	20	25	32	40	50	65	80	100
AØ	$38^{-0.016}$	$50^{-0.016}$	$70^{-0.019}$	$85^{-0.022}$	$110^{-0.022}$	$135^{-0.025}$	$170^{-0.025}$	$215^{-0.029}$	$265^{-0.029}$	$330^{-0.036}$
A1Ø	$38^{+0.034}_{+0.009}$	$50^{+0.034}_{+0.009}$	$70^{+0.040}_{+0.010}$	$85^{+0.047}_{+0.012}$	$110^{+0.047}_{+0.012}$	$135^{+0.054}_{+0.014}$	$170^{+0.054}_{+0.014}$	$215^{+0.061}_{+0.015}$	$265^{+0.069}_{+0.017}$	$330^{+0.075}_{+0.018}$
B	$15^{\pm0.25}$	$21.2^{\pm0.25}$	$31.3^{\pm0.3}$	$40.3^{\pm0.3}$	$52.3^{\pm0.3}$	$63.3^{\pm0.3}$	$80.3^{\pm0.3}$	$100.3^{\pm0.3}$	$119.3^{\pm0.3}$	$153.5^{\pm0.3}$
C	7	8	14	16	20	25	30	40	50	60
D	2	2	3	3	3	4	4	5	6	6
E	2.4	2.7	5.4	6.5	8.6	9.5	13.0	16.3	14.6	18
F	1.5	1.5	2	2	2	3	3	4	5	6
GØ	$6^{+0.010}$	$11^{+0.011}$	$16^{+0.011}$	$20^{+0.013}$	$26^{+0.013}$	$32^{+0.016}$	$40^{+0.016}$	$52^{+0.019}$	$65^{+0.019}$	$80^{+0.019}$
G_1Ø	$6^{-0.004}_{-0.016}$	$11^{-0.006}_{-0.024}$	$16^{-0.006}_{-0.024}$	$20^{-0.007}_{-0.028}$	$26^{-0.007}_{-0.028}$	$32^{-0.009}_{-0.034}$	$40^{-0.009}_{-0.034}$	$52^{-0.010}_{-0.040}$	$65^{-0.010}_{-0.040}$	$80^{-0.010}_{-0.040}$
HØ	15	23	31.6	39.5	52	64	79	103	126	158
IØ	26.2	37.4	52.3	65	84.6	104.6	131	169.4	209.3	261
JØ	$28^{-0.016}$	$38^{-0.016}$	$54^{-0.019}$	$67^{-0.019}$	$90^{-0.022}$	$110^{-0.022}$	$135^{-0.025}$	$177^{-0.025}$	$218^{-0.029}$	$272^{-0.032}$
J_1Ø	$28^{+0.028}_{+0.007}$	$38^{+0.034}_{+0.009}$	$54^{+0.040}_{+0.010}$	$67^{+0.040}_{+0.010}$	$90^{+0.047}_{+0.012}$	$110^{+0.047}_{+0.012}$	$135^{+0.054}_{+0.014}$	$177^{+0.054}_{+0.014}$	$218^{+0.061}_{+0.015}$	$272^{+0.069}_{+0.017}$
KØ	10	14	21	26	26	32	32	48	55	65
L	16	18	27	32	32	40	40	52	65	70
M	6	6	6	6	6	6	6	6	12	12
NØ	2.4	3.4	4.5	5.5	6.6	9	14	14	11	14
OØ	11	17	24	30	40	50	60	80	104	130
P	—	—	$3^{\pm0.013}$	$4^{\pm0.015}$	$5^{\pm0.015}$	$5^{\pm0.015}$	$6^{\pm0.015}$	$8^{\pm0.018}$	$8^{\pm0.018}$	$8^{\pm0.018}$
Q	—	—	10.4	12.8	16.3	16.3	21.8	27.3	31.3	31.3
RØ	$5^{+0.013}$	$6^{+0.013}$	$9^{+0.015}$	$11^{+0.018}$	$14^{+0.018}$	$14^{+0.018}$	$19^{+0.021}$	$24^{+0.021}$	$28^{+0.021}$	$28^{+0.021}$
R_1Ø	$5^{-0.004}_{-0.016}$	$6^{-0.004}_{-0.016}$	$9^{-0.005}_{-0.020}$	$11^{-0.006}_{-0.024}$	$14^{-0.006}_{-0.024}$	$14^{-0.006}_{-0.024}$	$19^{-0.007}_{-0.028}$	$24^{-0.007}_{-0.028}$	$28^{-0.007}_{-0.028}$	$28^{-0.007}_{-0.028}$
S	6	6	6	6	6	6	6	6	8	8
TØ	2.9	3.5	3.5	4.5	5.5	6.6	9	11	11	14
UØ	33	44	60	75	100	120	150	195	240	290
V	0.13	0.13	0.3	0.3	0.3	0.3	0.3	0.3	0.3	0.3
W	—	—	0.4	0.4	0.4	0.4	0.4	0.4	0.4	0.4
X	0.25	0.25	0.4	0.4	0.4	0.4	0.4	0.4	0.4	0.4
Y	$27^{\pm0.3}$	$33.6^{\pm0.4}$	$51.5^{\pm0.5}$	$63.5^{\pm0.5}$	$77.5^{\pm0.6}$	$95.5^{\pm0.6}$	$116.4^{\pm0.7}$	$146.3^{\pm0.7}$	$177.3^{\pm0.7}$	$220.2^{\pm0.8}$
aa	0.040	0.040	0.044	0.047	0.050	0.063	0.066	0.070	0.090	0.110
bb	0.020	0.028	0.028	0.036	0.044	0.050	0.060	0.070	0.080	0.090
cc	0.010	0.011	0.031	0.033	0.035	0.045	0.047	0.049	0.064	0.080
dd	0.020	0.020	0.025	0.036	0.036	0.048	0.048	0.048	0.054	0.060
ee	0.040	0.040	0.044	0.047	0.050	0.063	0.066	0.070	0.090	0.110
WEIGHT lb/kgf	0.18/0.08	0.3/0.14	0.6/0.3	1.2/0.5	2.6/1.2	5.1/2.3	9.0/4.1	20.3/9.2	38.6/17.5	63.5/28.8

ALIGNMENT AND ASSEMBLY

To achieve proper performance from Harmonic Drive Gear Sets, certain mounting and alignment requirements are necessary. Dimensions and tolerances marked [2] establish interface and installation requirements and must be adhered to under all load conditions.

Excessive deflection or improper alignment will affect the smoothness of motion or cause premature failure. All components must be restrained axially, including the wave generator which has a tendency to "walk" into the flexspline cup during operation.

Use high-strength alloy steel screws tightened to manufacturer's recommended torque specifications. Loctite or some other means to prevent loosening is also recommended. Typical tightening torques for high-tensile socket cap-head screws are as follows:

Screw Size		M2	M3	M4	M5	M6	M8	M10	M12
Tightening Torque	lb-in	5.3	19	41	85	140	350	680	1200
	Nm	0.6	2.1	4.6	9.5	16	39	77	135

TYPICAL INSTALLATION

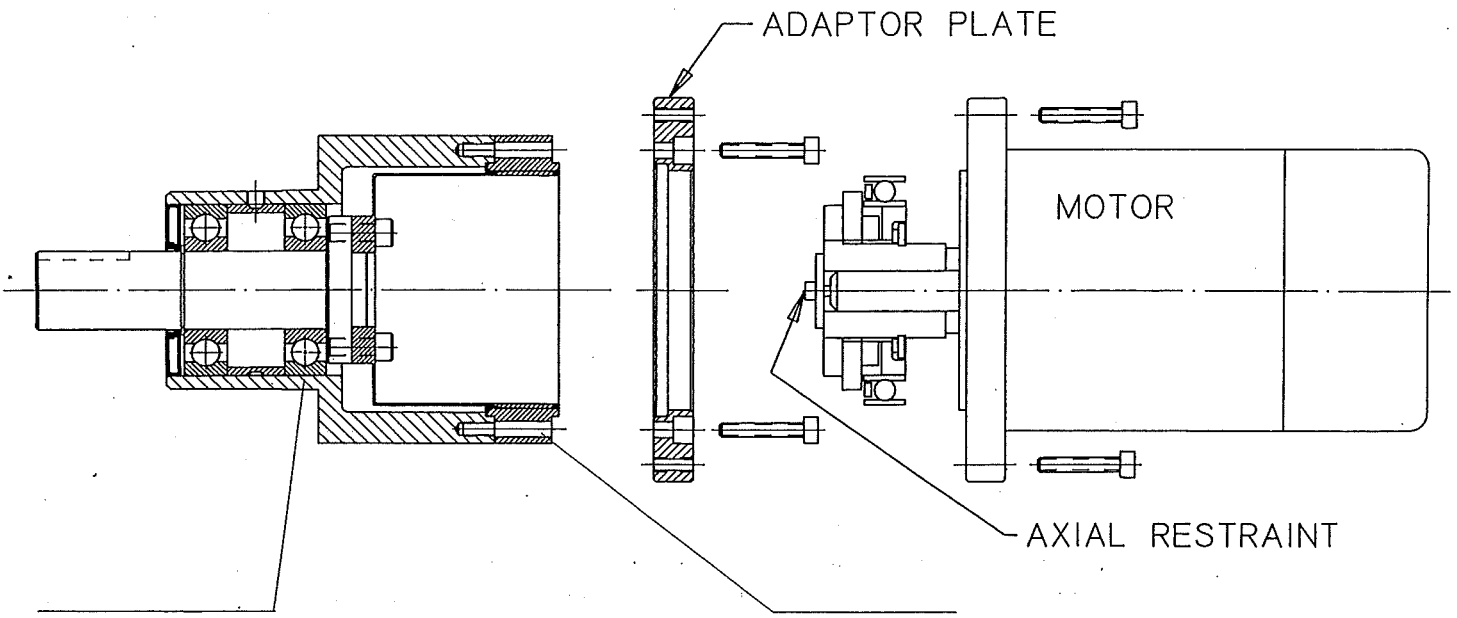

Flexspline Support
The flexspline must be connected to a bearing-supported shaft or fixed rotationally. Overhung loads from an external source require a suitable two-bearing support or a single four-point contact, "Gothic arch"-type bearing to maintain required tolerances [2].

Circular Spline
The circular spline may be located either on its outside diameter or on one of the two pilot diameters provided. Vibration may occur if the housing is allowed to distort the circular spline from roundness.

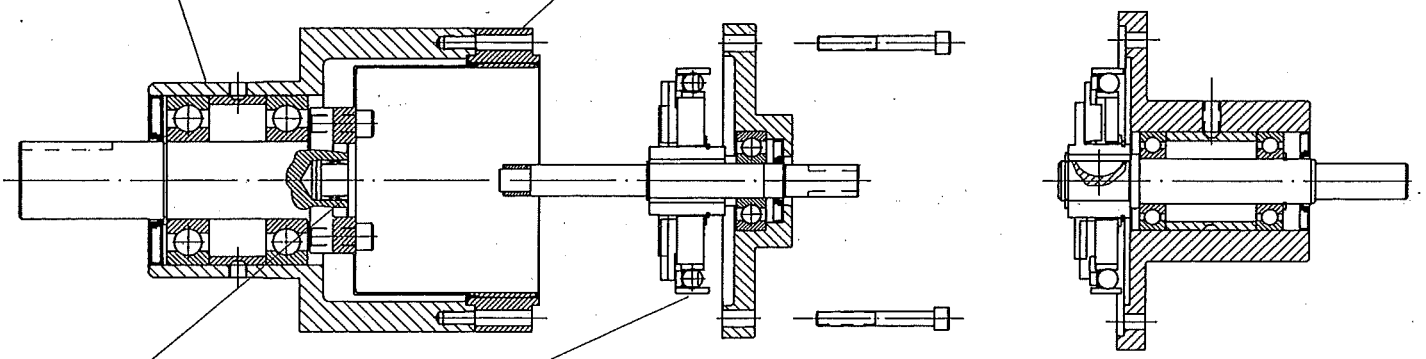

Wave Generator
The standard wave generator is provided with an Oldham coupling to allow for misalignment of the input drive. The wave generator bearing is not designed to support a shaft. Additional bearing support should be provided.

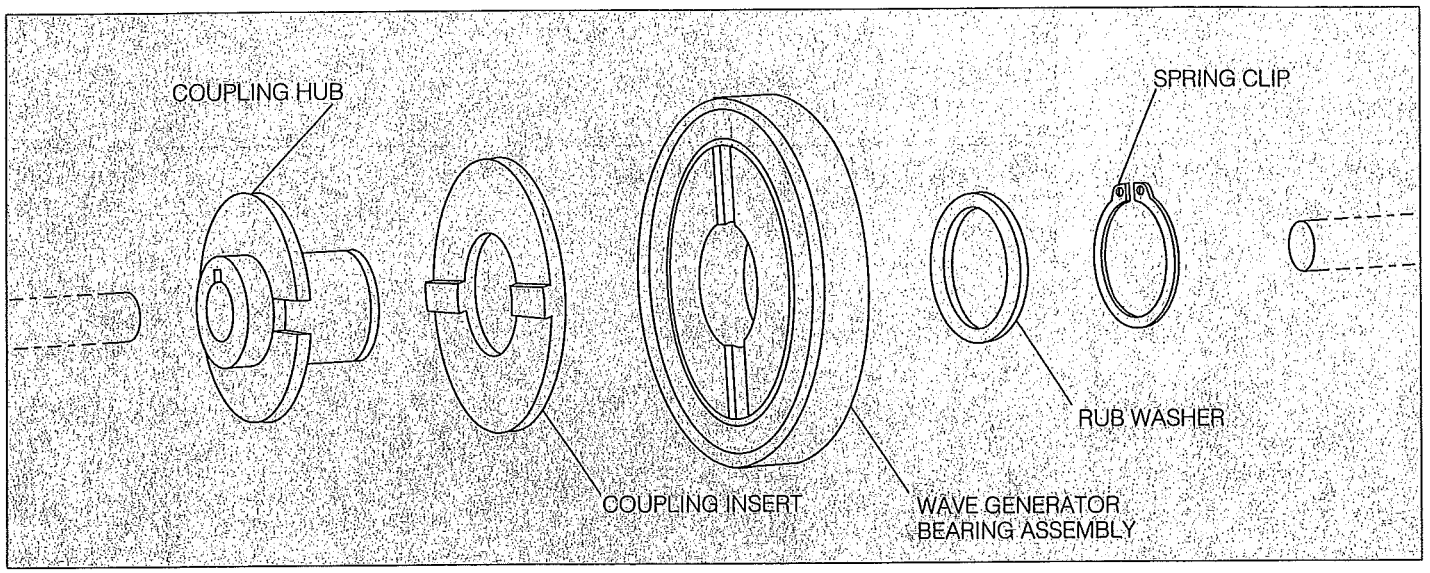

Input Assembly
The standard input arrangement consists of an elliptical wave generator, a bearing assembly, and an Oldham coupling.

The wave generator assembly can easily be removed from the gear set and disassembled for attachment to the motor shaft. Attachment can be from either direction provided its position in relation to the circular spline datum face is maintained.

Coupling hubs can be removed and rebored, or supplied to suit various motor shaft configurations on a custom basis. Consult our Engineering department for details.

Maximum bore sizes with Oldham couplings are as follows:

HDC SIZE	10	14	20	25	32	40	50	65	80	100
Maximum Bore (mm)	6	8	10	14	14	19	19	30	35	35

Backlash
True backlash is limited to mechanical clearance in the wave generator input coupling and, because of high gear ratios, is almost negligible at the output. For example, with an HDC 20-100:1 ratio gear set, coupling backlash of 35 arc minutes translates into backlash at output of 35/100 arc minutes.

Typical measured values for each size are as follows:

HDC SIZE	10	14	20	25	32	40	50	65	80	100
Max.Input Coupling Backlash (arc min.)	50	45	35	32	26	16	18	13	12	11

For critical positioning applications where backlash cannot be tolerated, it is possible to eliminate the coupling by mounting the input shaft directly to the wave generator. Consult our Engineering department for details.

Maximum bore sizes without Oldham couplings are as follows:

HDC SIZE	10	14	20	25	32	40	50	65	80	100
Maximum Bore (mm)	10	16	20	24	30	36	46	60	65	85

Typical attachment of wave generator without Oldham coupling.

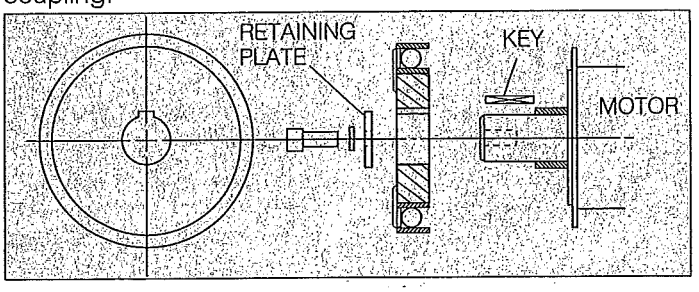

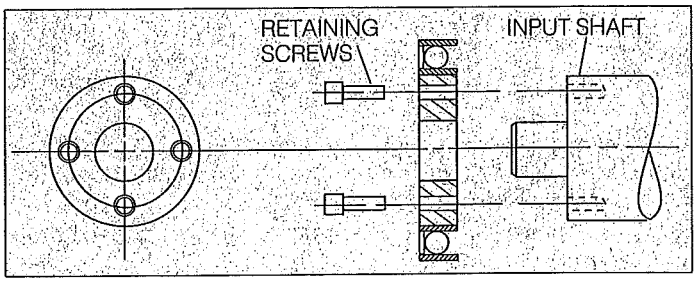

TORSIONAL SPRING RATE

For most practical purposes, the torsional spring rate of HDC components can be illustrated by a graph (Figure 3) with two distinct slopes, A and B.

A low torque applied to the output creates a nonlinear deflection shown in Slope A. This is sometimes referred to as "soft windup" and is dependent upon the clearance between the flexspline and the wave generator bearing race and the diametral clearance of the bearing. Stiffness for each size is shown in Figures 4 and 5. Gear set stiffness can be improved on a custom basis to increase the overall stiffness of the system. Designate K_2 when ordering.

See K_2 Slope A, Figures 4 and 5.

Figure 3: Torque - Torsion Graph

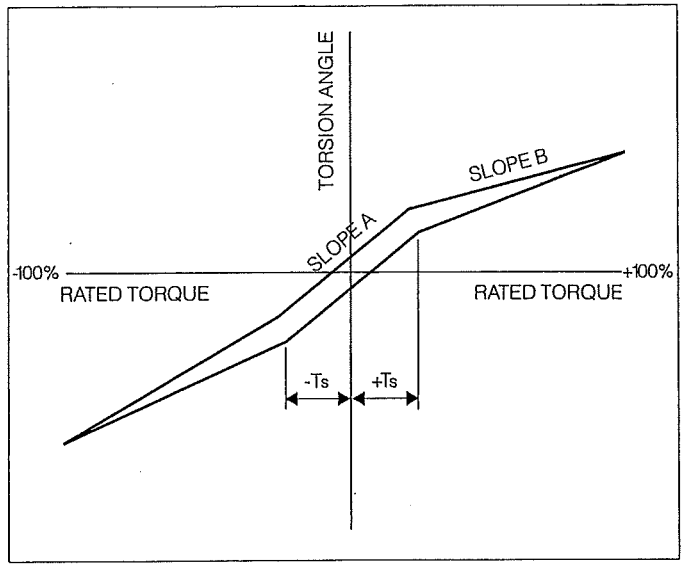

HDC SIZE	SLOPE A						SLOPE B	
	GUARANTEED MIN. R_1		K_2 R_1		TORQUE RANGE Ts		R_2	
	lb-in/rad	Nm/rad	lb-in/rad	Nm/rad	± lb-in	±Nm	lb-in/rad	Nm/rad
10	4500	508	7500	847	5	0.57	12000	1356
14	13500	1525	20500	2315	15	1.70	40000	4518
20	43000	4857	85000	9602	60	6.80	120000	13557
25	84000	9490	180000	20335	160	18.0	234000	26436
32	196000	22143	345000	38980	200	22.6	515000	58180
40	413000	46657	690000	77950	450	50.8	960000	108453
50	770000	86990	1.014×10^6	114553	800	90.4	1.88×10^6	212388
65	1.54×10^6	174000	2×10^6	226000	1400	158	4.12×10^6	465450
80	3.08×10^6	348000	4×10^6	451900	3000	339	7.68×10^6	867627
100	5.6×10^6	632645	7×10^6	790800	6000	678	15×10^6	1.7×10^6

Figure 4: 80:1 Ratio and Higher

HDC SIZE	SLOPE A						SLOPE B	
	GUARANTEED MIN. R_1		K_2 R_1		TORQUE RANGE Ts		R_2	
	lb-in/rad	Nm/rad	lb-in/rad	Nm/rad	± lb-in	±Nm	lb-in/rad	Nm/rad
10	3150	356	5250	593	5	0.57	12000	1356
14	9450	1067	14350	1621	15	1.7	40000	4518
20	30100	3400	59500	6722	60	6.8	120000	13557
25	58800	6643	126000	14235	160	18	234000	26436
32	137200	15500	241500	27283	200	22.6	515000	58180
40	289100	32660	483000	54566	450	50.8	960000	108453
50	539000	60892	709800	80188	800	90.4	1.88×10^6	212388
65	1.078×10^6	121784	1.4×10^6	158161	1400	158	4.12×10^6	465450
80	2.156×10^6	243568	2.8×10^6	316323	3000	339	7.68×10^6	867627
100	3.92×10^6	442852	4.9×10^6	553565	6000	678	15×10^6	1.7×10^6

Figure 5: 50:1 and 60:1 Ratios

The torsional spring rates shown in Figures 4 and 5 are measured by applying a torque to the output with the input fixed.

To calculate the maximum angular deflection of an HDC Cup Gear Set for an output torque, T, use the following equation:

$$\theta \text{Radians} = \frac{Ts}{R_1} + \frac{[T-Ts]}{R_2}$$

(See Figure 4 and 5 for Ts)

Example: When a torque of 600 lb-in is applied to the output of a standard HDC 25-100:1 ratio:

Total Angular Deflection =

$$\frac{160}{84000} + \frac{[600-160]}{234000} = 0.0038 \text{ radians}$$

If this deflection is unacceptably large, use a gear set with a custom K_2 spring rate (Slope A) or select a larger size.

Angular Deflection =

$$\frac{160}{180000} + \frac{[600-160]}{234000} = 0.0028 \text{ radians}$$

POSITIONAL ERROR

Positional error is the difference between the actual position and the theoretical position of the output for any known input movement.

Positional error $= \left(\frac{\theta_1}{R}\right) - \theta_2$

Where θ_1 = Input rotation angle
θ_2 = Actual output rotation angle
R = Reduction ratio

The maximum error for each HDC size is listed in Figure 6. However, it may be possible to improve this on a custom basis.

Figure 6

HDC SIZE	10	14	20	25	32	40	50	65	80	100
Maximum Positional Error ± arc seconds	150	110	75	60	47	38	30	25	19	15

Typical Error Trace

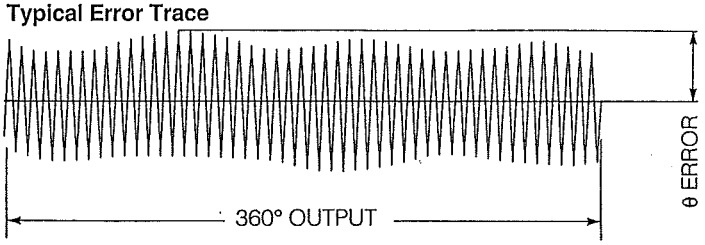

REPEATABILITY

When the output is repeatedly cycled in the same direction to the same theoretical position as defined by the input position and the ratio, there will be a range of actual positions. This range represents repeatability error and is typically 15% of the maximum positional error for each size gear set under no-load conditions.

For example, a positioning device is driven by an HDC-25 cup component set. The device rotates repeatedly between home position and a theoretical required position 87.5° away (Point A).

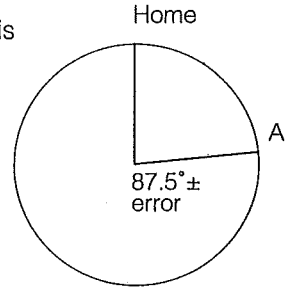

The maximum positional error of an HDC-25 is ± 60 arc seconds (see Figure 6). The maximum repeatability error is 15% of this, or ± 9 arc seconds. The actual position of the device, therefore, will always be within ± 9 arc seconds of Point A.

For applications with critical positioning requirements or those involving reversing loads, it may be necessary to consider hysteresis loss or lost motion, the value of which is a function of torsional windup and the torque profile for the particular application. Consult our Engineering department for assistance.

BACK DRIVING/REVERSIBILITY

HDC Gear Sets are not self-locking. They are reversible and cannot, therefore, be used to hold a load in position without the addition of a brake. This reversibility allows the HDC's use as a speed increaser, with the flexspline or circular spline as the drive member and the wave generator as the high-speed output element. Input/output versatility is demonstrated below.

Note:
When using HDC Gear Sets as a speed increaser, be sure not to exceed the maximum speeds listed.

INPUT/OUTPUT VERSATILITY

1.
Speed Reducer:
Circular Spline stationary. Wave Generator input. Flexspline output. Ratio as tabulated.

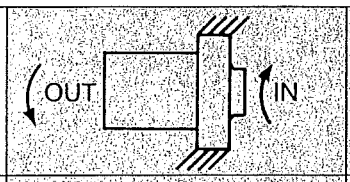

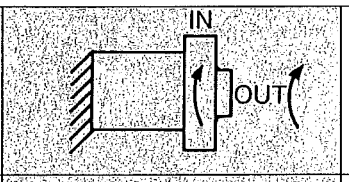

4.
Speed Increaser:
Flexspline stationary. Circular Spline input. Wave Generator output. Ratio as tabulated plus1.

2.
Speed Increaser:
Circular Spline stationary. Flexspline input. Wave Generator output. Ratio as tabulated.

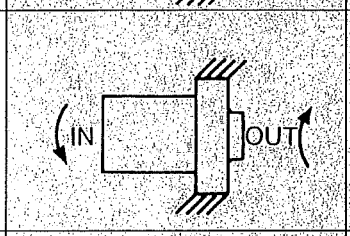

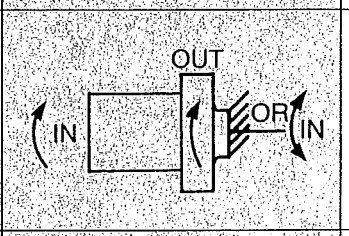

5.
Speed Reducer/Differential:
Wave Generator stationary. Flexspline input. Circular Spline output.
Ratio $= \frac{\text{Tabulated Ratio}}{\text{Tabulated Ratio} + 1}$

3.
Speed Reducer:
Flexspline stationary. Wave Generator input. Circular Spline output. Ratio as tabulated plus 1.

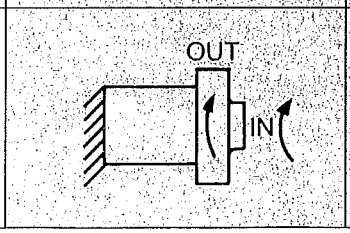

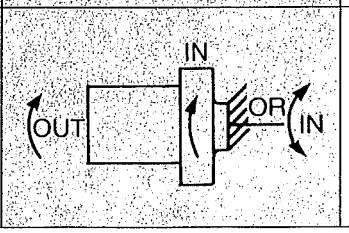

6.
Speed Increaser/Differential:
Wave Generator stationary. Circular Spline input. Flexspline output.
Ratio $= \frac{\text{Tabulated Ratio} + 1}{\text{Tabulated Ratio}}$

EFFICIENCY

The efficiency of HDC Gear Sets varies with speed, ratio, lubrication, and temperature. The following graphs show the approximate measured values of efficiency against percentage of rated torque. These values can be adjusted by a temperature factor (Graph 5); however, extremes of temperature or excessively low loading should be referred to our Engineering department.

Graph 1: 500 RPM Input*

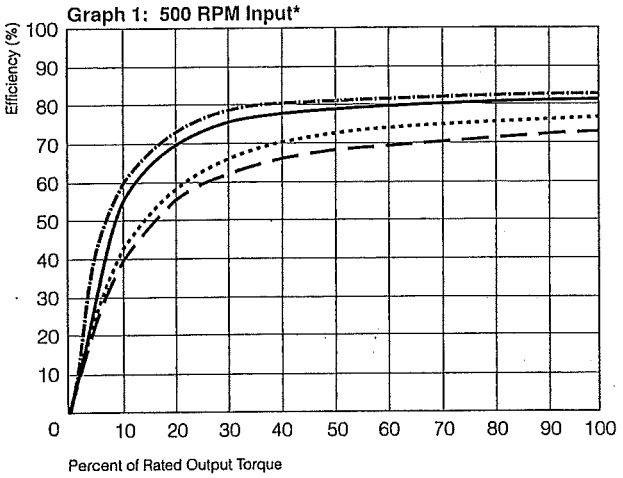

Graph 2: 1000 RPM Input*

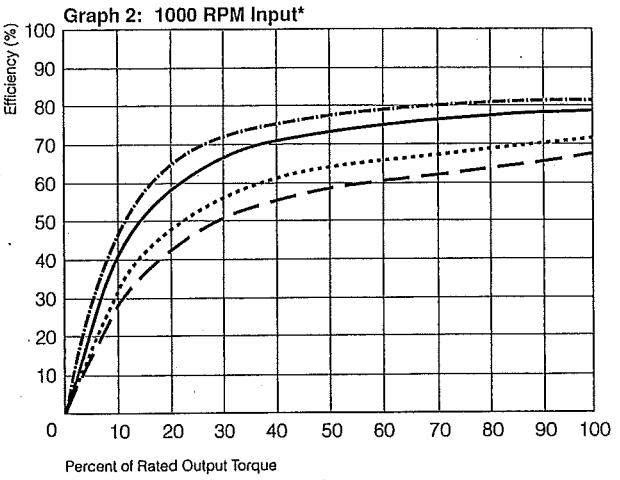

Graph 3: 2000 RPM Input*

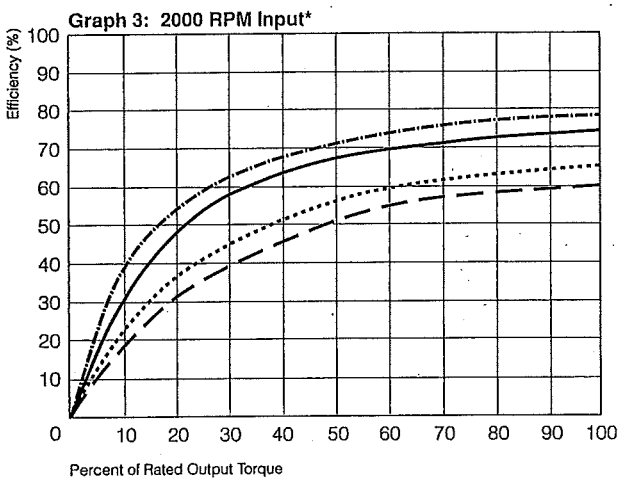

Graph 4: 3500 RPM Input*

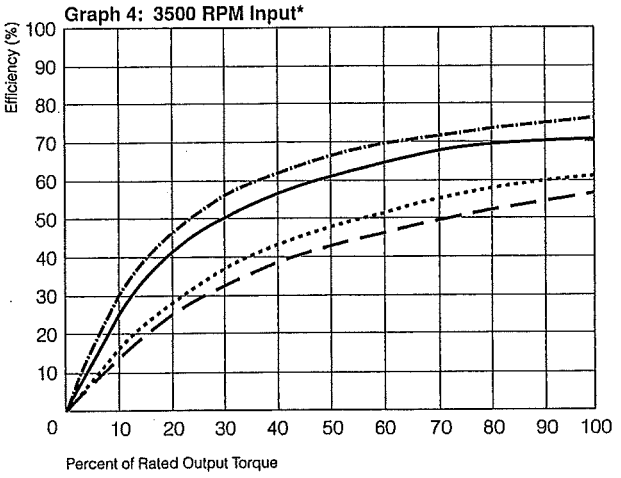

Graph 5: Temperature Factor

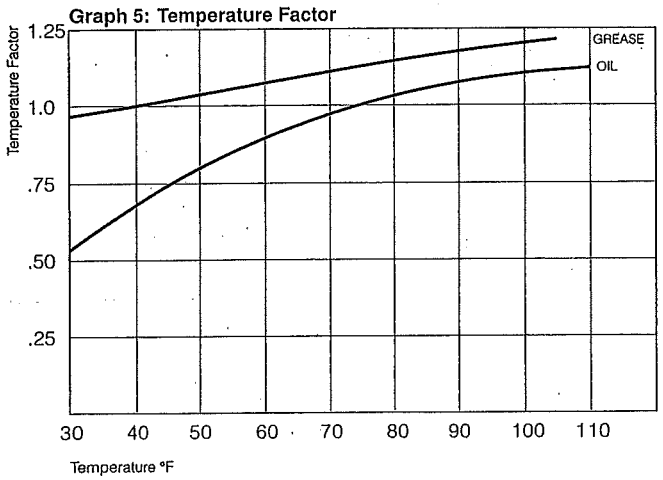

Legend:

- 60:1
- 100:1
- 160:1
- 200:1

* ATF

Multiply the efficiency value from Graphs 1-4 by the temperature factor from Graph 5.

HD 0094

DEDOIDAL CONDITION

For proper operation of an HDC Gear Set, it is essential that the teeth of the flexspline be concentric with those of the circular spline. Incorrect assembly or loading in excess of the Ratchet Torque Limit will result in an off-center or "dedoidal" condition.

To check for such a condition, insert a feeler gauge at the two minor axis positions to insure an equal gap 'A'. Alternatively, position an indicator probe against the outer wall of the flexspline. For one complete revolution of the input there should be two equal deflections of the probe. We recommend including an access hole in the housing for this purpose.

If the unit is discovered to be in dedoidal condition, it must be reassembled to make it concentric. Operating the unit in the dedoidal condition will result in poor performance and reduced life.

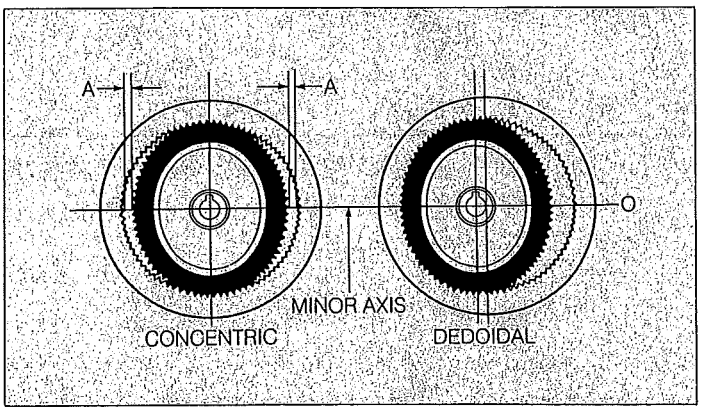

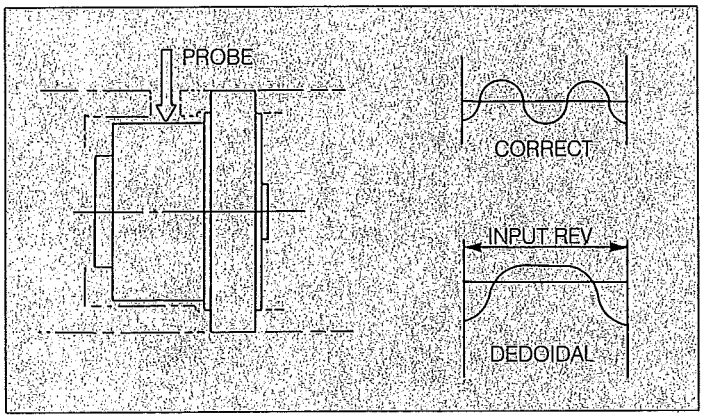

LUBRICATION

Harmonic Drive gearing functions equally well in any mounting position, provided it is adequately lubricated. Areas requiring lubrication are the circular spline/flexspline tooth mesh, the wave generator bearing, the Oldham coupling, and the bore of the flexspline in the region of the wave generator bearing contact.

For applications within the maximum listed running speeds, suitable lubricants include:

	HDC SIZE	SUITABLE LUBRICANTS*
Oil	All	ATF Automatic Transmission Fluid (such as Exxon Dexron II) for temperatures up to 200°F (93°C)
Grease	10 14	Kluber L3200 (Available from Harmonic Drive Technologies)
	20 to 100	Exxon Beacon 325 or Andok B Shell Aeroshell 5 Amoco Super Mil A278323

See ratings table on Page 3 for maximum running speeds

HDC SIZE	10	14	20	25	32	40	50	65	80	100
Oil Level (L) (mm)	7	8	13	16	20	26	30	42	50	65

Oil Levels

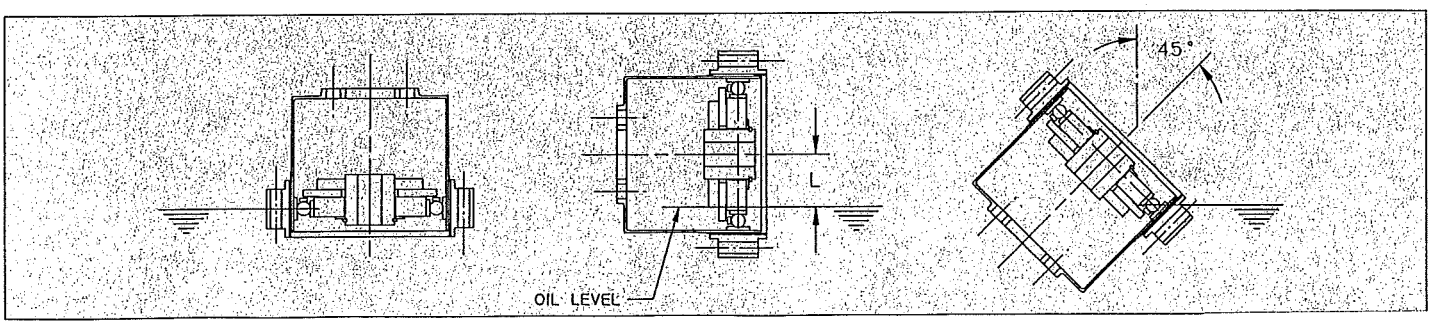

HOUSED REDUCERS

All HDC Cup Component Gear Sets are available as fully housed reducers to satisfy a range of requirements from heavy-duty industrial applications to miniature precision servo applications.

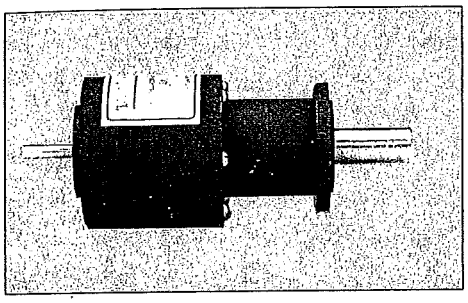

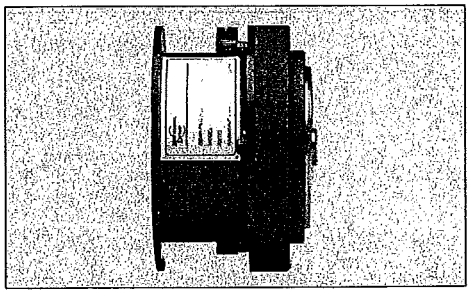

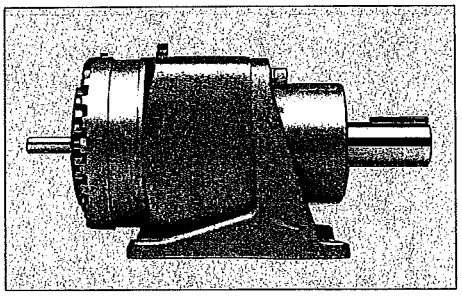

PSR Precision Servo Reducers
- Conventionally configured speed reducers
- For small servo applications
- High ratios
- Low to zero backlash
- Accuracies to arc minutes

PCR Precision Compact Reducers
- Compact in-line speed reducers
- 50 to 200 times the torque from servomotors or steppers
- Provides a simple method for creating differentials
- Low to zero backlash
- Accuracies to arc minutes

ISR Industrial Speed Reducers
- Heavy-duty, industrial grade speed reducers
- Cup component design provides concentric shafting
- For high-ratio, continuous-use applications

THROUGH-HOLE DESIGN FOR PIPES OR CABLES

HDC T-Cup Component Gear Sets have a large center through-hole design to accommodate shafts, cables, pipes, etc. Consult our Engineering department for details.

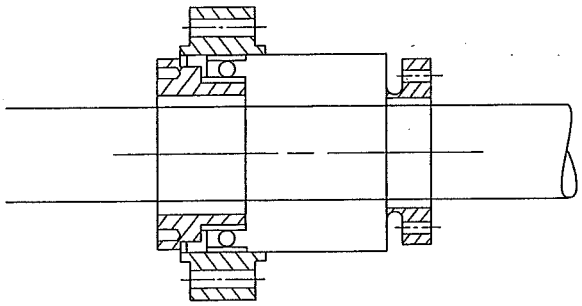

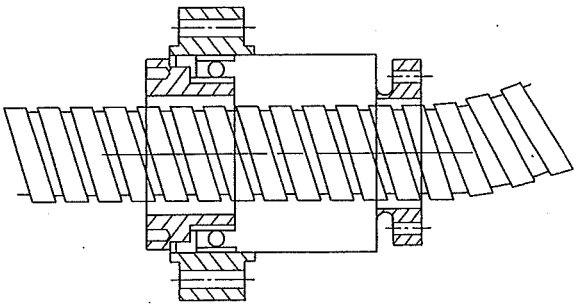

AEROSPACE QUALITY FOR SUPERCRITICAL APPLICATIONS

For many years Harmonic Drive Technologies has been supplying high-quality gear sets for commercial and military aerospace applications. In fact, Harmonic Drive Technologies has produced over 1500 space flight units with zero defects. Consult our Engineering department for details.

ORDERING DETAILS

OPTIONS—
DELETE IF NOT REQUIRED

HDC — XX — YY — 2A — K_2 — SP

SIZE
[10-100]

RATIO

COMPONENTS ONLY

OPTIMIZED STIFFNESS
SLOPE 'A' REQUIRED

SPECIAL FEATURES
CUSTOMER TO SPECIFY

Harmonic Drive® TECHNOLOGIES

MADE IN USA

Harmonic Drive Technologies
Teijin Seiki Boston, Inc.
247 Lynnfield Street
Peabody, MA 01960
TEL: (978) 532-1800
FAX: (978) 532-9406
www.harmonic-drive.com

I.S. EN ISO 9001

HDCSG 75M 4/98N

HD 0097

Printed in USA

Miniature Precision Servo Actuator

- Zero Backlash
- High Ratio
- Fast Response

Harmonic Drive® TECHNOLOGIES

HD 0098

Harmonic Drive® TECHNOLOGIES

PS Series Precision Servo Actuator

Harmonic Drive Technologies has the perfect solution for applications that require accurate positioning and precise motion control. The PS series Precision Servo Actuator combines the zero backlash and high torque of Harmonic Drive gearing with advanced motor technology to meet the increasing demands of precision servo applications.

Features

- Zero Backlash
- High Torque
- High Precision
- Brush Motor with Rare Earth Magnets
- Fast Response
- Low Rotor Inertia
- Low Electric Noise
- Small Inductance
- Superior Torque-to-Weight Ratio
- Rigid Output Support
- Low Magnetic Interference
- Precision Output Bearings

Actuator Specifications

	Unit	PSA-8-080	PSA-8-100	PSA-10-060	PSA-10-080	PSA-14-050	PSA-14-100
Rated Output Power	W	8.6	6.1	18	12.5	28	26.8
Rated Output Torque	lb-in	12	17	25	35	40	75
	Nm	1.4	1.9	2.6	4.0	4.5	8.4
Rated Output Speed	RPM	60	30	60	30	60	30
Maximum Output Speed	RPM	100	75	120	90	120	60
Maximum Continuous Torque	lb-in	15	17	30	40	40	75
	Nm	1.7	1.9	3.4	4.5	4.5	8.6
Maximum Repeated Torque	lb-in	15	17	30	40	119	180
(acceleration, deceleration)	Nm	1.7	1.9	3.4	4.5	13.4	20.3
Peak Instantaneous Torque	lb-in	23	31	50	80	140	200
(emergency stop, etc)	Nm	3.4	4.5	5.6	9.0	15.8	22.6
Rated Voltage	V	12	12	45	33	38	38
Max. Continuous Current	A	1.22	1.22	.943	.943	.943	.943
Terminal Resistance	W	2.34	2.34	11.5	11.5	11.5	11.5
Torque Constant	lb-in/A	12.5	15.6	47.4	63.2	40	79
	Nm/A	1.41	1.76	3.8	5.02	4.5	8.93
Terminal Inductance	mH	24	24	3.16	3.16	3.16	3.16
Rotor Moment of Inertia	lb-in²	0.0046	0.0046	0.024	0.024	0.035	0.035
at motor shaft	kg-m²	1.33×10^{-6}	1.33×10^{-6}	6.87×10^{-6}	6.87×10^{-6}	1.02×10^{-6}	1.02×10^{-6}
Encoder Resolution	P/R	500	500	500	500	500	500
Net Weight	lb	0.85	0.85	1.67	1.67	2.16	2.16
	kg	0.39	0.39	0.76	0.76	0.98	0.98
Speed Constant	RPM/V	5.09	4.07	1.34	1.00	1.62	8.1
Ratio	1:R	80	100	60	80	50	100
Maximum Radial Load at	lb	45	45	60	60	115	115
Center of Output Shaft	kgf	20.4	20.4	27.2	27.2	13.0	13.0
Maximum Axial Load	lb	20	20	45	45	52	52
on Output Shaft	kgf	9.1	9.1	20.4	20.4	55	55

NOTE: All units listed above are standard units. Please contact our factory for custom solutions.

HD 0099

For more information contact Harmonic Drive Technologies at 978-532-1800 • Fax 978-532-9406 • e-mail info@harmonic-drive.com

Performance Curves

PSA-08-080

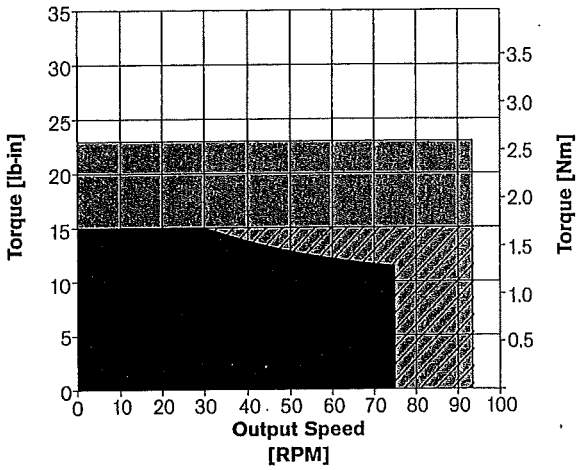

PSA-08-100

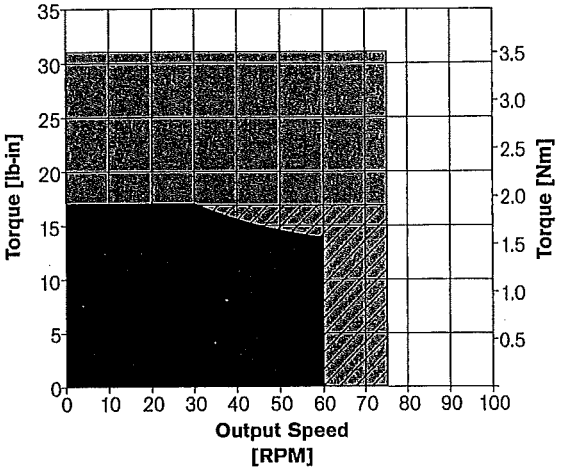

Maximum Continuous Torque

PSA-10-060

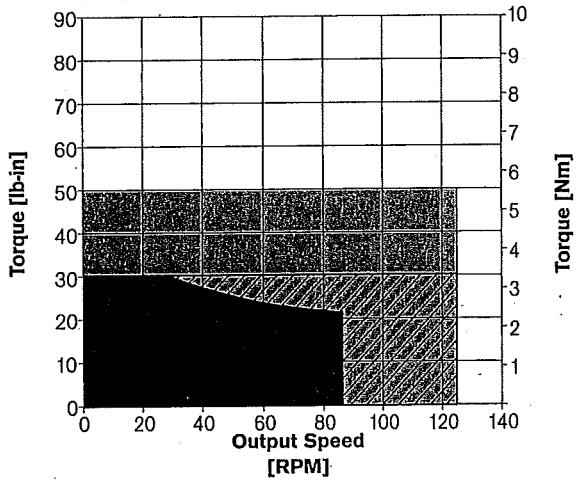

Peak Instantaneous Torque

PSA-10-080

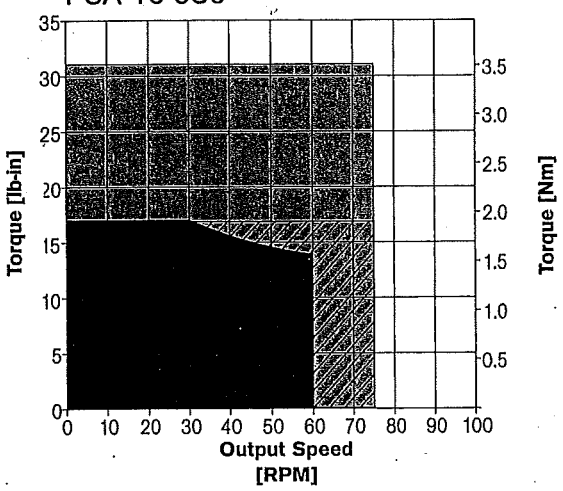

Maximum Repeated Torque

PSA-14-050

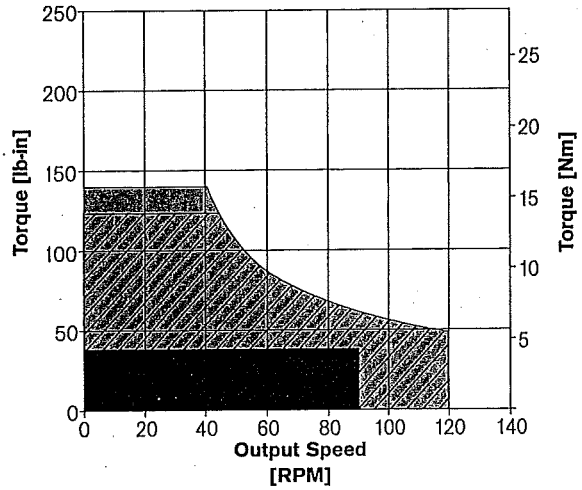

PSA-14-100

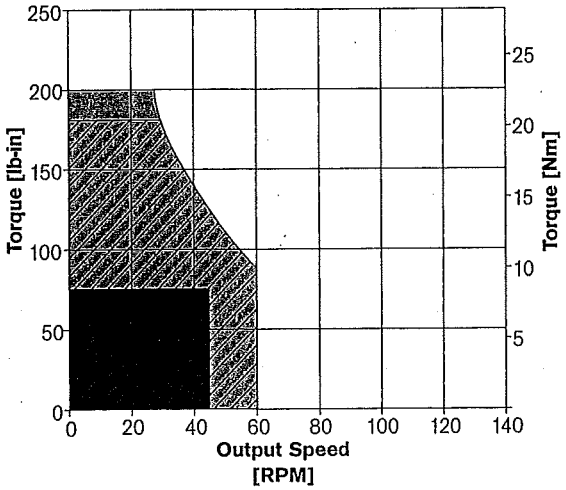

HD 0100

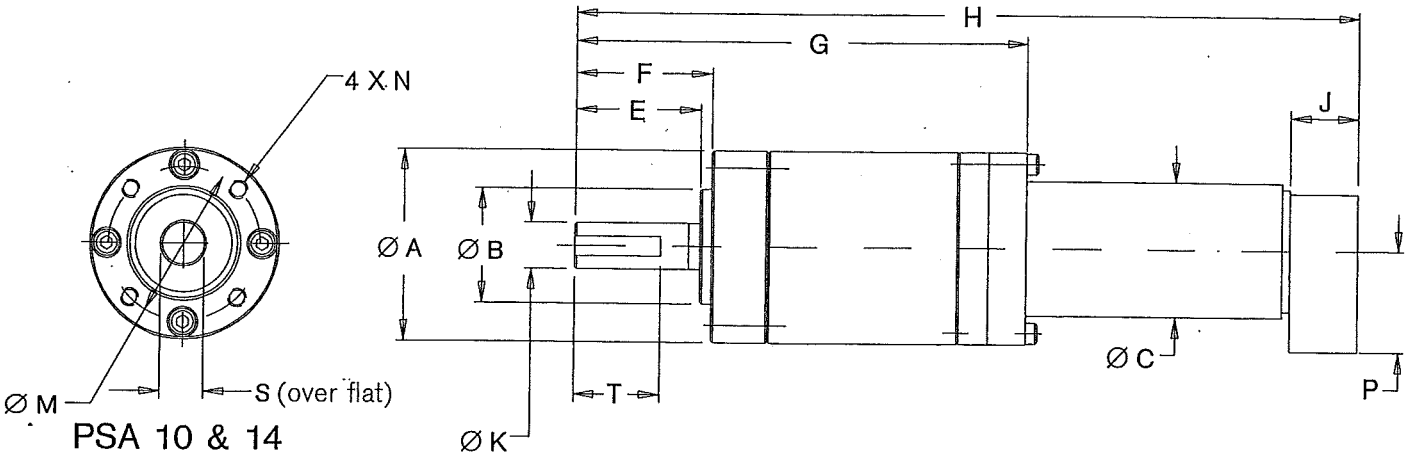

PSA 10 & 14

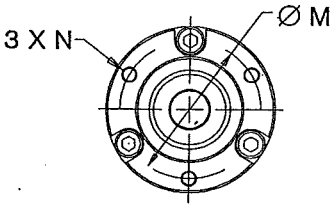

PSA 8

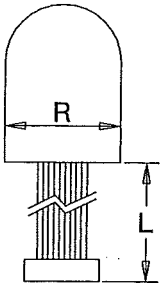

Encoder

	ØA	ØB	ØC	E	F	G	H	J	ØK	L	ØM	N	P	R	S	T
PSA-08	33	21h6	25	20	22	72	144	18.3	8h6	483	27.4	M3x 5x6 Deep	26.2	27.5		
PSA-10	38	18h6	35	22	25	87	176	18.3	8h7	483	30	M3x 5x6 Deep	26.2	30		
PSA-14	50	30h6	35	26	29	103	192	18.3	12h7	483	40	M5x 8x6 Deep	26.2	30	11.4	23

Typical Application Examples

Harmonic Drive Technologies' gearheads and actuators provide the optimum solution to any high precision motion control application.

- Precise Positioning Systems
- Semiconductor equipment
- Robotics
- Index Tables
- Medical Equipment
- Laboratory Equipment
- Print Machine Rollers
- Wafer Handling
- Special Machinery
- Aerospace
- Optical Equipment
- Laser Positioning

Harmonic Drive Technologies has been providing quality motion control products to industry for over 40 years. We offer the practical solution to your motion control requirements. All of our manufacturing is done at our factory in Peabody, Massachusetts and we have a full engineering and support staff on hand to answer any question you may have. Feel free to contact us at 978-532-1800(phone), 978-532-9406(fax) or info@harmonic-drive.com(e-mail).

HD 0101

Gearing
Harmonic Drive Gearing with zero backlash and a superior torque-to weight ratio is used in all PSA actuators.

Motor
PSA actuators utilize low-inertia moving coil motors with high power density Neodymium magnets for maximum performance and rapid acceleration.

Output
The output shaft is supported by preloaded angular contact bearings providing zero radial play, zero end float, ar maximum overhung load capability.

Lubrication
All gearing is lubricated and mounted in a fully sealed housing for minimum maintenance and long life. Special lov outgassing or non-lithium greases can be provided for cleanroom or semiconductor applications on request.

Encoder
A 500 count optical encoder with line driver is supplied as standard on all PSA actuators. Higher resolutions can supplied on request.

Encoder Data

Hewlett Packard HEDL 554x	
Supply Voltage	4.5 - 5.5 V_{dc}
Output Signal Driver Used	EIA Standard RS 442 DS26LS31
Output Current per Channel	approx. 20mA
Number of Channels	2 + 1 Index Channel
Counts per Turn	500 or 1000
Phase Shift (nominal)	90° e
Logic State Widths	45° e
Rise Time*	180 ns
Fall Time*	40 ns
Index Pulse Width (nominal)	90° e
Operating Temperature Range	-40°C to 100°C
Maximum Velocity	30,000 RPM
Maximum Acceleration	250,000 rad/s²
Max Operating Frequency	100 KHz

*(Typical at C_L = 25pF, RL = 11kW, 25°C)

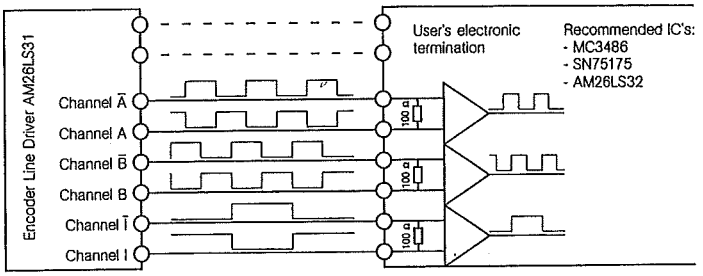

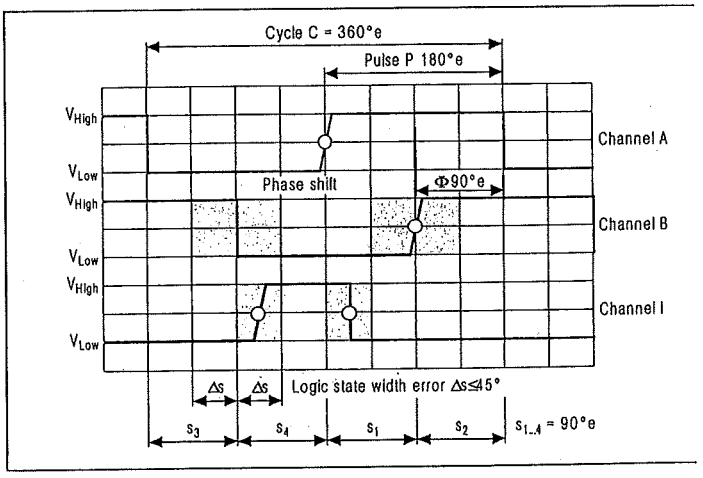

Connector Pin Allocation

HD 0102

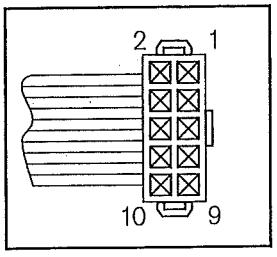

Pin #	Color	Designation
1	Brown	N.C.
2	Red	VCC
3	Orange	GND
4	Yellow	N.C.
5	Green	Channel Ā

Pin #	Color	Designation
6	Blue	Channel A
7	Violet	Channel B̄
8	Grey	Channel B
9	White	Channel Ī
10	Black	Channel I

Harmonic Drive Technologies.....

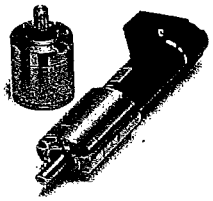

PSA
Actuators and Gearheads

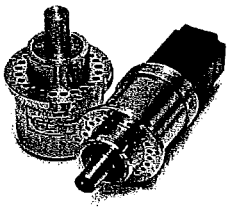

PSS
Shaft Output
Actuators and Gearheads

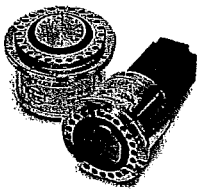

Flange Output
Actuators and Gearheads

Cup, Pancake and
Hollow Shaft Component
Gear Sets

Solutions for all your High Precision, Motion Control Requirements.

Harmonic Drive Technologies manufactures, markets and develops zero backlash, high ratio motion control products. Our complete line of products includes component gear sets, housed units, gearheads and actuators to satisfy any motion control requirement. Ratios range from 50:1 to 200:1. Higher ratios and custom configurations are also available. We provide our customers with the cost effective, fast time to market, most reliable motion control products, systems and solutions.

The NEW PS series offers Shaft (PSS) and Flange (PSF) output Servo Actuators and Gearheads and miniature Precision Servo Actuators and gearheads (PSA). Each of these units offers the zero-backlash and high torque synonymous with Harmonic Drive gearing with housings and motors as a solution to any motion control application.

Harmonic Drive Technologies has been supplying motion control products to industry for over 40 years. All of our design and manufacturing is done at our plant in Peabody, Massachusetts and we have a complete engineering and technical sales staff on hand to assist you with any motion control problem you may be confronted with.

Feel free to contact us with any questions you may have. We can be reached by phone 978-532-1800, fax 978-532-9406, e-mail info@harmonic-drive.com or on the World Wide Web at harmonic-drive.com.

HD 0103

Harmonic Drive® TECHNOLOGIES

MADE IN THE USA
ISO 9001 Certified

Teijin Seiki Boston Inc.
247 Lynnfield Street
Peabody, MA 01960
Tel: 978-532-1800
Fax:978-532-9406

Teijin Seiki Company Ltd
2-4-1 Nishi-Shinjuku
Shinjuku-ku, Tokyo, Japan
Tel: 81-3-3348-2277
Fax: 81-3-3348-1050

Teijin Seiki Europe Gmbh
Klosterstrabe 49
40211 Dusseldorf
Tel: 49-0211/17 37 9-0
Fax: 49-0211/36 46 77

Flange/Shaft Output Precision Gearheads

- Zero Backlash
- High Ratio
- Flexible Integration

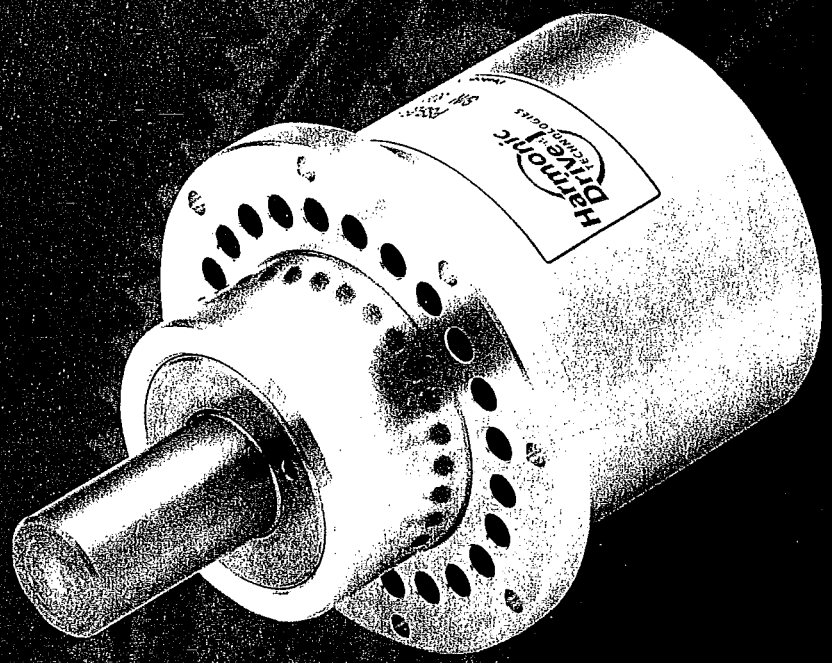

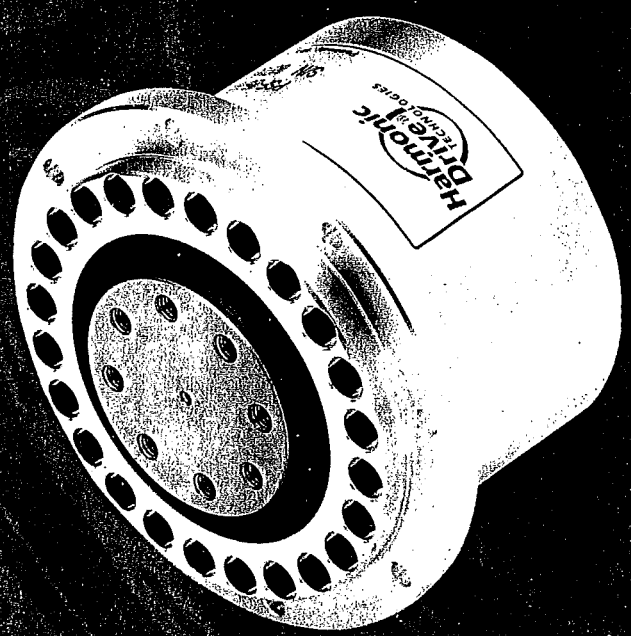

HD 0104

Harmonic Drive Technologies has the perfect solution for applications that require accurate positioning and precise motion control. The PS series Flange Output (PSF-G) and Shaft Output (PSS-G) Gearheads utilize the zero backlash and high torque of harmonic drive gearing mounted in superior quality housings and precision, high load output bearings. Input options allow compatibility with most servo or stepper motors.

FEATURES

- **Zero Backlash**
- **High Torque**
- **High Torsional Stiffness**
- **High Precision**
- **Motor Mounting Options**
- **High Overhung Load Capacity**

GEARHEAD SELECTION

LOADING ANALYSIS

To select from the ratings table it is necessary to construct or estimate a torque speed profile diagram as in figures 1 and 2.

Normal operating conditions involve momentary peak torques substantially higher than constant speed running torques. These peak torques must be carefully considered when selecting a Harmonic Drive Gearhead.

Maximum Repeated Output Torque
The torque required to accelerate the driven components from rest to normal continuous running speed. T_1

Normal Constant Speed Torque, T_2

Normal Deceleration Torque, T_3

Maximum Momentary Torque, T_4
This is the peak torque generated by sudden shock loads such as emergency stops or crashes. Particularly severe conditions exist with high output inertia and stringent rapid stop requirements. These high levels of torque must be limited.

Figure 1 : Speed Profile

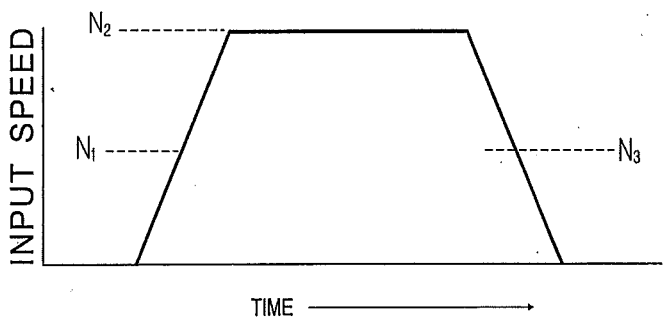

Figure 2 : Torque Profile

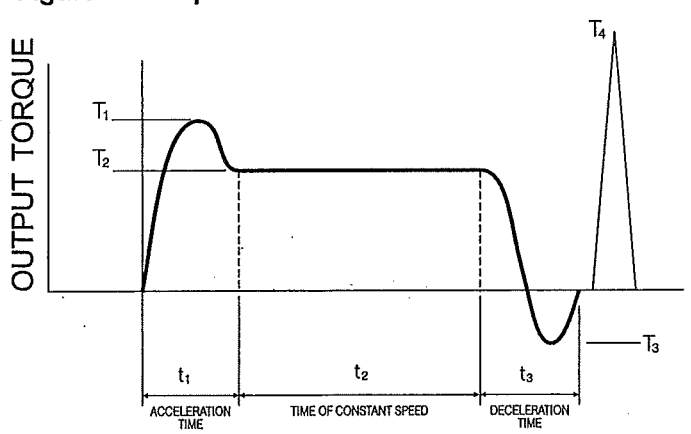

Mean Torque, T
Calculate the mean Torque

$$T = \sqrt[3]{\frac{t_1N_1T_1^3 + t_2N_2T_2^3 + t_3N_3T_3^3}{t_1N_1 + t_2N_2 + t_3N}}$$

Mean Speed, N
Calculate the mean speed

$$N = \frac{t_1N_1 + t_2N_2 + t_3N_3}{t_1 + t_2 + t_3}$$

HD 0105

GEARHEAD SPECIFICATIONS

PSS PSF	Ratio	Rated Output Torque @2000rpm		Limit for Repeated Output Torque (Tmax)		Limit for Momentary Overload Torque		Static Torque Limit		Maximum Speed	Input Inertia		Weight PSS		Weight PSF	
		lb in	Nm	lb in	Nm	lb in	Nm	lb in	Nm	RPM	lb in²	kg cm²	lb	kg	lb	kg
20	50	344	39	470	53	780	88	1280	145	5600	0.072	.20	4.2	1.9	2.6	1.2
	80	370	42	660	74	1120	127	2200	245							
	100	380	43	740	83	1300	147	2200	245							
25	50	570	64	800	90	1500	169	2500	282	4500	.18	.50	8.5	3.9	5.2	2.4
	80	570	64	1200	136	2200	255	3400	384							
	100	570	64	1400	158	2510	284	3400	384							
	160	610	69	1550	175	2780	314	3400	384							
32	50	1100	124	1800	203	4000	452	4900	553	3500	.56	1.6	12.7	5.9	8.0	4.1
	80	1100	124	2690	304	5030	568	6900	779							
	100	1150	130	2950	333	5730	647	6900	779							
	160	1250	141	3290	372	6080	686	6900	779							

Maximum Repeated Output Torque (Tmax)
This is the maximum allowable torque that should be developed with dynamic torque at the input. Repetitive momentary or continuous running loads (T1, T2, and T3) should not exceed this rating.

Backdriving
Harmonic Drive gearing can be easily backdriven unless the input shaft is locked. *Under no circumstances should a gearhead be used to support a load without a failsafe device on the output if there is risk of personal injury.*

Maximum Input Speed
The Maximum input speed is limited by the DN value of the wave generator bearing and the type of lubricant used. Maximum input speeds for each size unit using recommended grease are listed in the ratings table.

Static Torque Limit
This is the maximum allowable torque that should be applied to the output when the input is locked. A typical example is the torque applied to the output during a work or machining operation when the Harmonic Drive is stationary.

Rated Output Torque at Rated Speed Tn
Assuming Limit for Repeated Torque (Tmax) is not exceeded, this is the maximum output torque which can be transmitted at the rated input speed (2000 rpm) to achieve an average wave generator life of L50=35000hours.

The following formula is used to calculate the continuous torque rating at input speeds other than 2000rpm:

$$T = \left[\frac{2000}{N}\right]^{.33} \times T_N$$

T = permissible continuous torque
N = required speed
T_N = rated torque (see chart)

T must not exceed the limit for repeated output torque.

HD 0106

PSF GEARHEAD

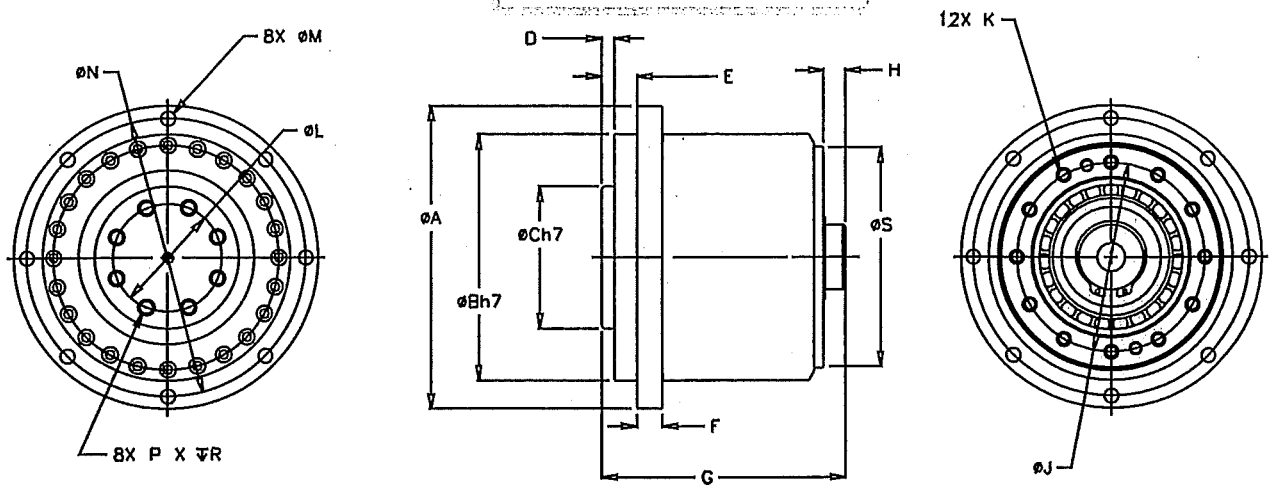

PSF	ØA	ØB	ØC	D	E	F	G	H	ØJ	K	ØL	ØM	ØN	P	R	ØS
20	96	58h7	45h7	4	10.9	8	77	6.9	60	M3	34	4.5	88	M5	10	70h6
25	121	99h7	55h7	4	12	10	93	8	75	M4	42	5.5	111	M6	10	85h6
32	147	123h7	75h7	4	14	9	105	1.5	100	M5	60	6.6	136	M8	12	110h6

(mm)

The output flange of PSF gearheads is supported by precision bearings that allow combinations of axial and moment loads.The maximum allowable combination of these external loads are shown in figure 2. A moment load applied to the output flange will create a deflection as shown in figure 1. It is not recommended to exceed 1.5 arc minutes.

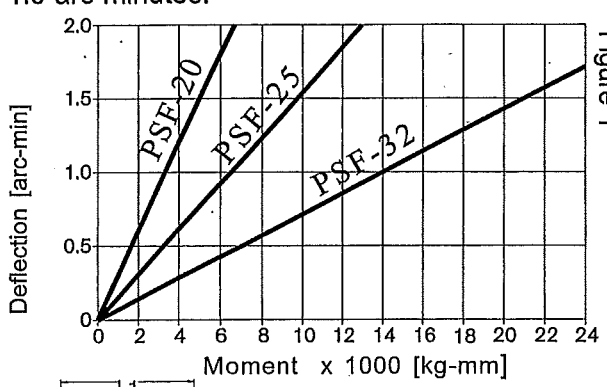

Figure 1

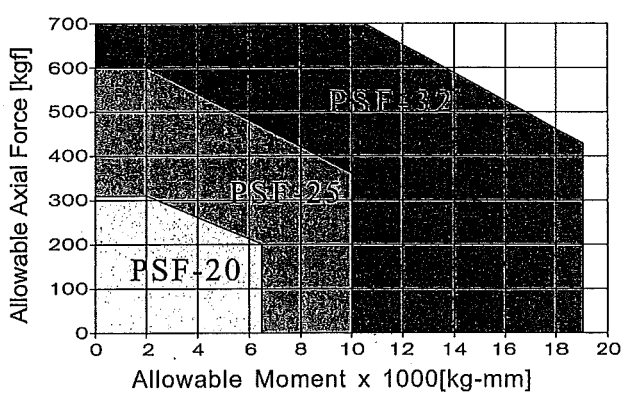

Figure 2

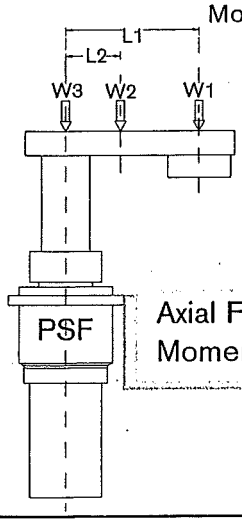

Example 1

Axial ForceFa = $W_1^{kg}+W_2^{kg}+W_3^{kg}+...$

Moment Load = $W_1^{kg}(L_1^{mm}) + W_2^{kg}(L_2^{mm})+...$

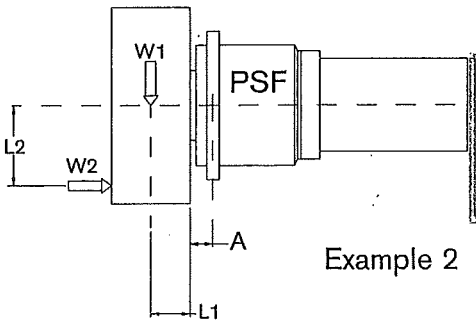

Size	A
20	16.5
25	20.0
32	26.0

(mm)

Example 2

Axial Force Fa = W_2^{kg}

Moment Load = $W_1^{kg}(L_1^{mm} + A^{mm}) + W_2^{kg}(L_2^{mm})+...$

HD 0107

PSS GEARHEAD

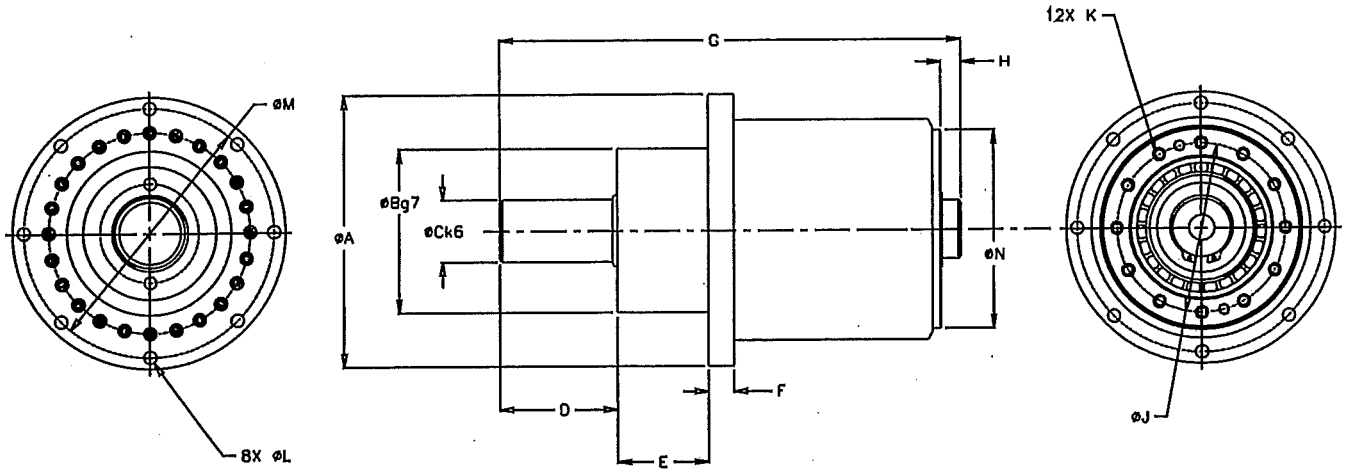

PSS	ØA	ØB	ØC	D	E	F	G	H	ØJ	K	ØL	ØM	ØN
20	96	58g7	22k7	41.5	32	9	162	6.9	60	M3	4.5	88	70h6
25	121	70g7	28k7	51	36	11	186	8	75	M4	5.5	111	85h6
32	145	90g7	32k7	73.5	40	12	239	1.5	90	M5	6.6	136	110h6

(mm)

The output shaft of the PSS gearhead is supported by pre-loaded taper roller bearings to eliminate end float and radial play. The maximum axial and radial loads that can be applied are demonstrated below.

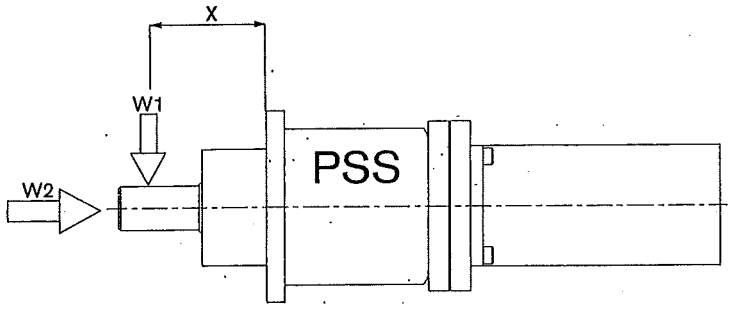

PSS	X(mm)	W1(kg)	W2(kg)
20	48	170	170
25	77	380	320
32	90	520	490

PSS output shafts are manufactured from high quality alloy steel of hardness 220 Br. and 70,000 PSI compression strength. Keys and keyways are not recommended for high performance servo applications. Zero backlash friction clamp-ring devices that are not affected by reversing or dynamic shock loads should be used. Axial impact loads on the end of the shaft should be avoided.

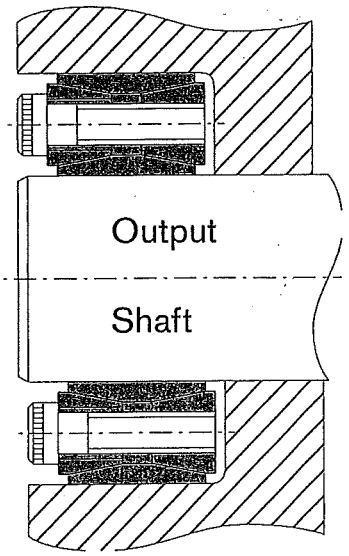

HD 0108

TYPICAL MOTOR ADAPTER PLATE

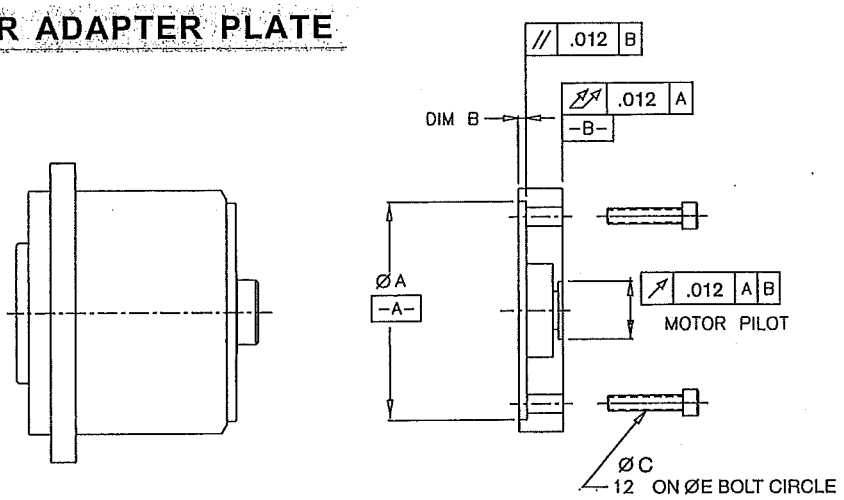

It is recommended that PSS/ PSF gearheads be purchased with motor adapter kits supplied by Harmonic Drive Technologies. Contact our engineering department with the details of your motor interface.

PSS/PSF	ØA	B	C	E	T	
20	70H6	2.5	M3x0.5	60	17 lb-in	1.9 Nm
25	85H6	2.5	M4x0.7	75	40 lb-in	4.5 Nm
32	110H6	2.5	M5x0.8	100	80 lb-in	9.0 Nm

Diagram 1

DETAILS

Motor Shafts should be sealed or the adapter plate should be fitted with a seal to prevent contamination of the motor from the grease contained in the gearhead.

Input hubs must be fixed both radialy and axially to the motor shaft. Contact our engineering department for assistance.

Use Loctite on all bolts and tighten to value "T" shown

INPUT ASSEMBLY

The typical input assembly consists of an elliptical wave generator bearing and an Oldham coupling. The wave generator assembly can be easily removed from the gearset and disassembled for attachment to the motor shaft.

Coupling hubs can be removed and rebored, or supplied to suit various motor shaft configurations on a custom basis. Consult our engineering department for details. Maximum bore sizes are shown in figure 2. Input hubs must be fixed both radially and axially to the motor shaft. Contact our engineering department for assistance.

If a stepper motor is being used the Oldham coupling should be eliminated.

PSF PSS	MAX BORE
20	10 mm
25	14 mm
32	14 mm

Diagram 2

LUBRICATION

All gearheads are supplied with special moly white RE 00 grease to be applied before assembly. Do not substitute without consulting our engineers. Convenient grease cartridges are also available upon request.

HD 0109

Efficiencies

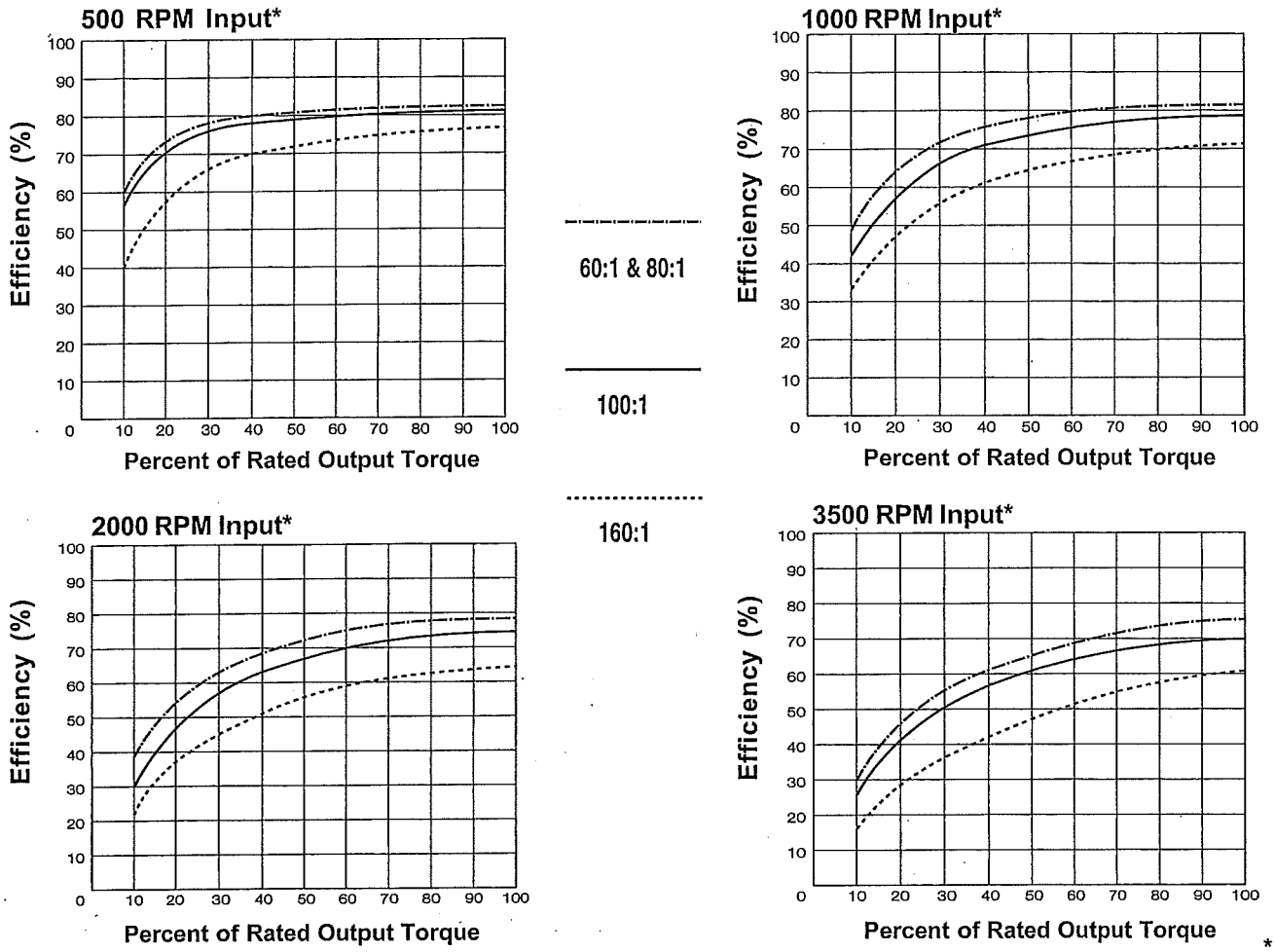

* At 20° C

The efficiency of a Harmonic drive gearbox is dependent on speed, ratio, load and temperature. For convenience the above graphs show efficiency against percentage of rated output torque. In applications where the output torque is very low compared to the ratings or in extreme temperature consult our factory.

Typical Application Examples

Harmonic Drive Technologies' gearheads and actuators provide the optimum solution to any high precision motion control application.

- Precise Positioning Systems
- Semiconductor Equipment
- Robotics
- Index Tables
- Medical Equipment
- Laboratory Equipment
- Print Registration
- Wafer Handling
- Laser Positioning

Harmonic Drive Technologies has been providing quality motion control products to industry for over 40 years. Our intention is to offer a total solution to any motion control problem you may be confronted with. We have a full engineering staff on hand to answer any question you may have, and all of our manufacturing is done, on-site at our factory in Peabody, Massachusetts.

HD 0110

Harmonic Drive Technologies.....

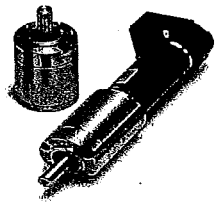

PSA
Actuators and
Gearheads

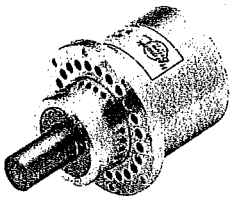

PSS
Shaft Output
Actuators and
Gearheads

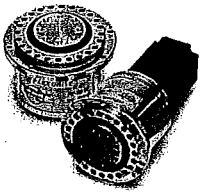

PSF
Flange Output
Actuators and
Gearheads

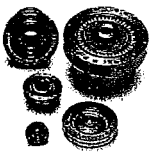

Cup, Pancake and
Hollow Shaft Compo-
nent Gear Sets

Solutions for all your High Precision, Motion Control Requirements.

Harmonic Drive Technologies manufactures, markets and develops zero backlash, high ratio motion control products. Our complete line of products includes component gear sets, housed units, gearheads and actuators to satisfy any motion control requirement. Ratios range from 50:1 to 200:1. Higher ratios and custom configurations are also available. We provide our customers with the cost effective, fast time to market, most reliable motion control products, systems and solutions.

The NEW PS series offers Shaft (PSS) and Flange (PSF) output Servo Actuators and Gearheads and miniature Precision Servo Actuators and gearheads (PSA). Each of these units offers the zero-backlash and high torque synonmous with Harmonic Drive gearing with housings and motors as a solution to any motion control application.

Harmonic Drive Technologies has been supplying motion control products to industry for over 40 years. All of our design and manufacturing is done at our plant in Peabody, Massachusetts and we have a complete engineering and technical sales staff on hand to assist you with any motion control problem you may be confronted with.

Feel free to contact us with any questions you may have. We can be reached by phone 1-800-921-3332, fax 978-532-9406, e-mail info@harmonic-drive.com or on the World Wide Web at harmonic-drive.com.

HD 0111

Harmonic Drive® TECHNOLOGIES

MADE IN THE USA
ISO 9001 Certified

Teijin Seiki Boston Inc.
247 Lynnfield Street
Peabody, MA 01960
U. S. A.
Tel: 1-800-921-3332
Fax:978-532-9406

Teijin Seiki Company Ltd
3-3-1 , Nishishimbashi
Minato-Ku, Tokyo,
JAPAN
Tel: 81-3-3348-2277
Fax: 81-3-3348-1050

Teijin Seiki Europe Gmbh
Klosterstrabe 49
40211 Düsseldorf
GERMANY
Tel: 49-0211/17 37 9-0
Fax: 49-0211/36 46 77

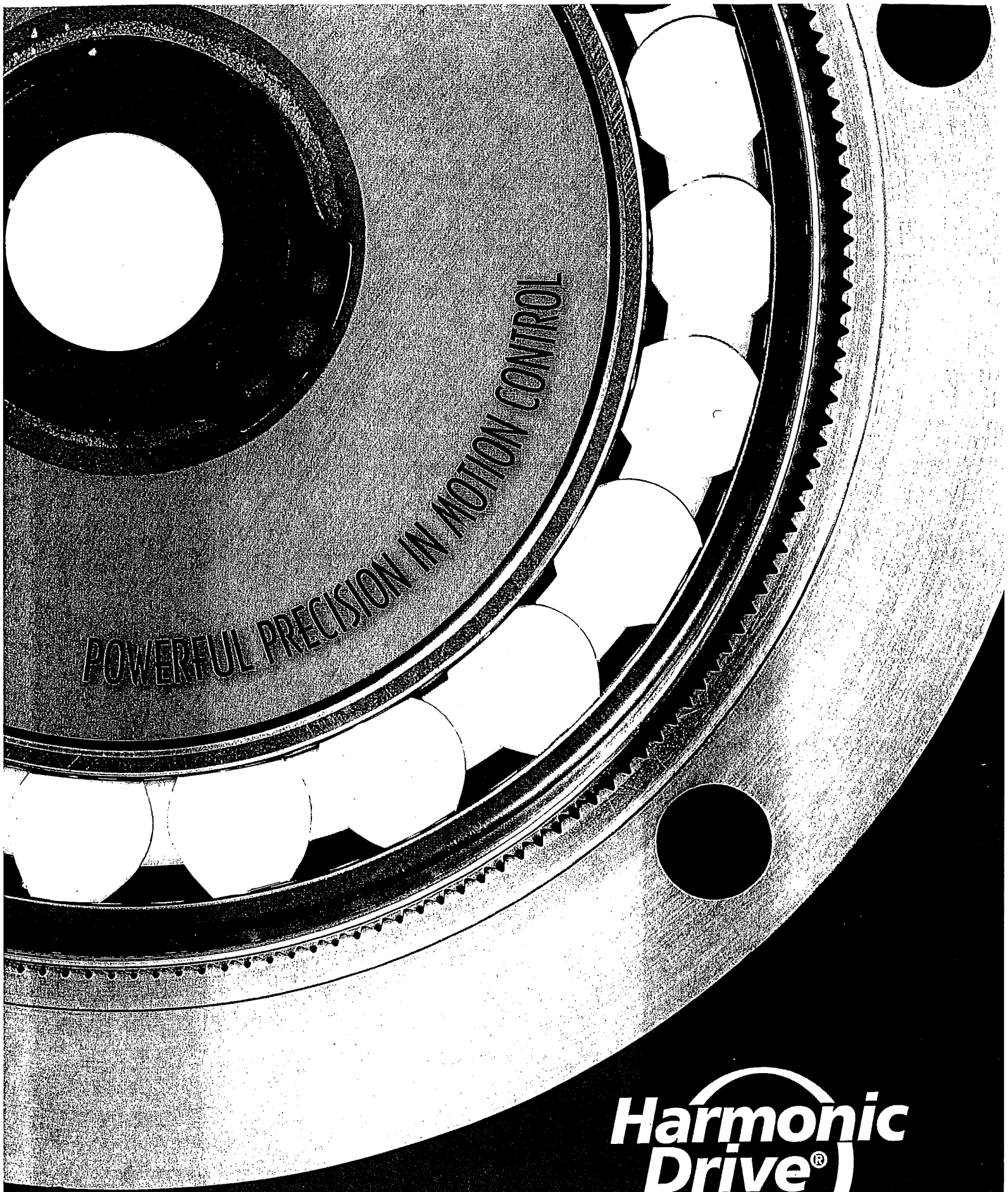

Harmonic Drive® TECHNOLOGIES

HD 0112

A FOCUS ON SOLUTIONS

On behalf of all of the employees of Harmonic Drive Technologies, thank you for your interest in our company and our unique products.

We are pleased to offer you the broadest range of rotary motion control technologies available in the industry: harmonic drive, RV drive, and precision planetary gear systems. Our mission is to provide you with a complete precision motion control solution and to become your business partner.

You'll find that all of us at HDT share an enthusiasm for our unique electro-mechanisms. But most important, we all share an enthusiasm for solving your unique application problems. We know that your success is our success. So please give us a call – you'll be pleased with the result.

Robert P. Lascelles, President

Count on our solutions

Harmonic Drive Technologies is a world leader in the design and manufacture of harmonic drive gearheads, component gear sets, and complete harmonic drive actuators. But to our customers, we are much more than that – we are a partner. Our customers, who span industries ranging from semiconductor and factory automation to medical and aerospace, count on Harmonic Drive Technologies to help them meet their unique needs. They count on our engineering innovation, our project support, and the many other resources that we provide. They count on us for solutions.

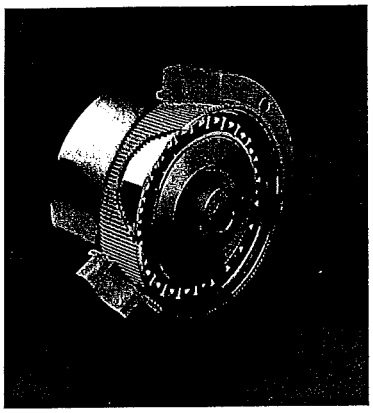

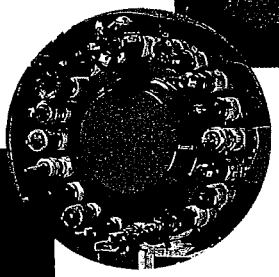

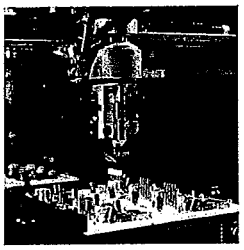

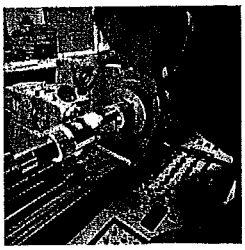

Lighter, smaller, stronger

More than a provider of gearing, actuators and other products, Harmonic Drive Technologies supplies standard and custom motion control solutions which are designed to minimize space while offering both high load capacity and long life. We are dedicated to developing and manufacturing products that are lighter, smaller and stronger.

Our complete solutions to precision motor control problems include: integrated motors and electronics; custom assemblies for machine manufacturers; and material and design solutions for aerospace and other problematic environments. We also offer applications support, prototyping, fast delivery, and field sales support.

A subsidiary of Teijin Seiki

Harmonic Drive Technologies is a wholly owned subsidiary of Teijin Seiki Co., Ltd. of Tokyo, Japan, a company that produces the complimentary industrial robot drive technology called the RV gear. Without changing the structure or management of Harmonic Drive Technologies, Teijin Seiki has assisted us in further modernizing our manufacturing and expanding our engineering and development capabilities. Teijin Seiki also provides Harmonic Drive Technologies with technical resources such as vacuum technology, manufacturing expertise and electronic development.

A HISTORY OF INNOVATION

Harmonic Drive's patented technologies bring unmatched precision and performance to motion control solutions.

1955	Harmonic drive invented by C. Walton Musser
1958	Harmonic drive developed at United Shoe Machinery Corp. Research Division - patent issued
1960	Harmonic Drive Division formed under United Shoe Machinery, later changed to USM Corp.
1962	First harmonic drive-equipped satellite launched - beginning of long history of harmonic drives as critical actuation in space - still used extensively today
1965	Hermetically sealed actuator developed for space launch vehicle (early predecessor of ChamberLink™ technology)
1971	Launch of Lunar Rover with wheels powered by hermetically sealed harmonic drives
1973	Color printing registration significantly advanced with harmonic drive
1986	First harmonic drives used in semiconductor wafer handling robots
1987	Harmonic Drive Technologies acquired by Quincy Partners
1991	Harmonic Drive Technologies acquired by Teijin Seiki Ltd., adding advanced robot gear technology to company offerings
1994	ISO 9001 certification granted
1995	Advanced tooth profile patent issued, increasing performance of harmonic drive
1995	The technology for The ChamberLink is patented
1998	Servo actuators introduced
1999	ChamberLink vacuum servo actuators and PowerHub™ hollow-shaft servo actuators introduced

FACILITIES AND SERVICES

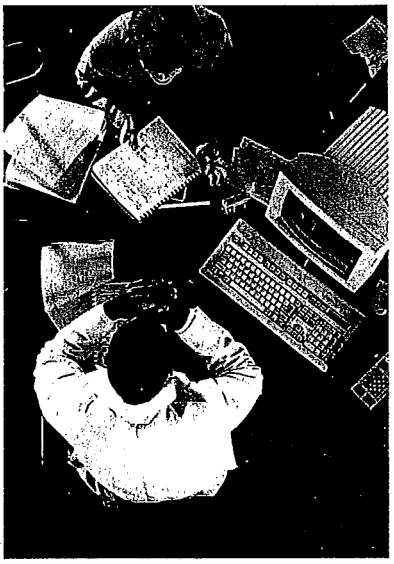

Field Sales

We have sales engineers and technical representatives located throughout the United States. Harmonic Drive distributors are also located in Canada, Germany and Japan.

Manufacturing

Harmonic Drive's 34,000 sq. ft. Peabody headquarters is an expandable manufacturing facility that uses state-of-the-art CNC turning, milling and gear-cutting machinery, and computerized precision metrology and testing equipment. Our parts are made with very high precision, much of which is within 5 microns (0.0002 inches). Clean room assembly is available. We manufacture in both small lots and series production. Harmonic Drive Technologies has been ISO 9001 certified since July 1994.

Engineering

Harmonic Drive Technologies' engineering staff has expertise in gear design, mechanical design, electronic controls, servomotors, aerospace, vacuum, lubrication, and a wide range of applications. Customer design assistance, prototyping, system integration, and new technology development are available.

SOLUTIONS IN ACTION

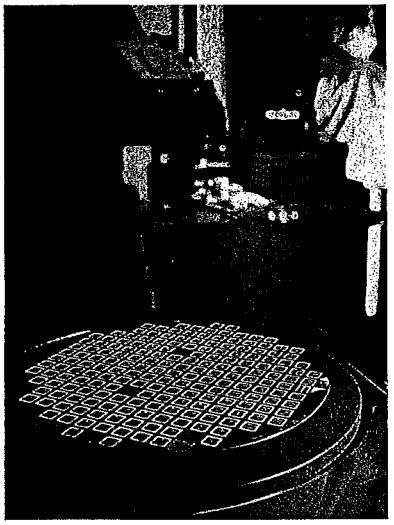

Semiconductor Manufacturing Equipment

Solutions for wafer handling mechanisms, test and measurement, assembly and in-vacuum processing.

Harmonic Drive Technologies' engineers and designers have an in-depth understanding of the needs and goals of our core markets. We have an extensive track record of producing innovative precision motion control solutions for a wide range of challenging applications.

Factory Automation

Solutions for robotic joint actuation, parts positioning, infeed, assembly mechanisms, indexing devices, and more.

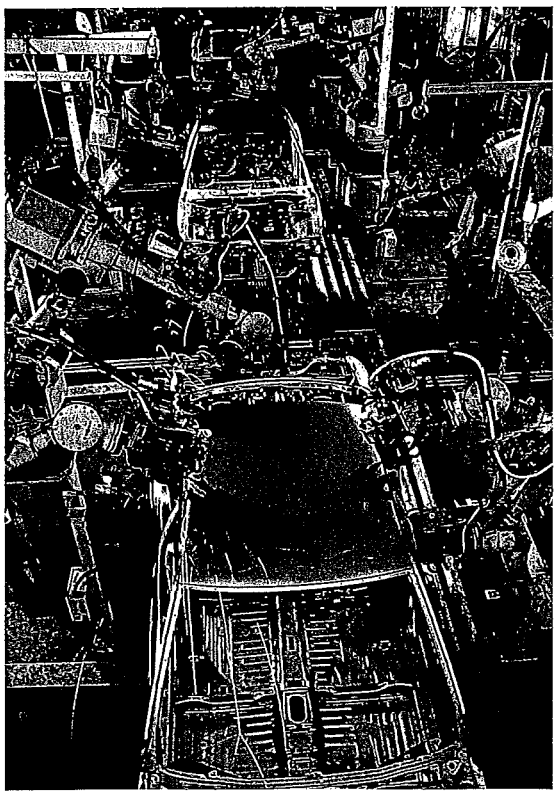

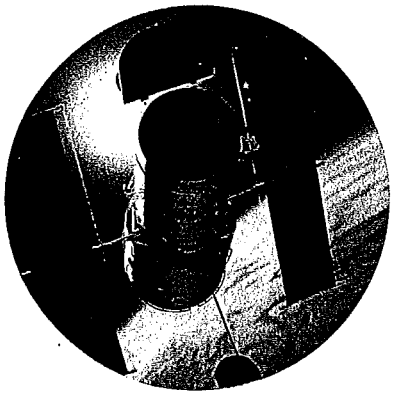

Aerospace

Solutions for satellite actuators (2500+ to date), aircraft, ground support, tracking devices for both military and commercial applications.

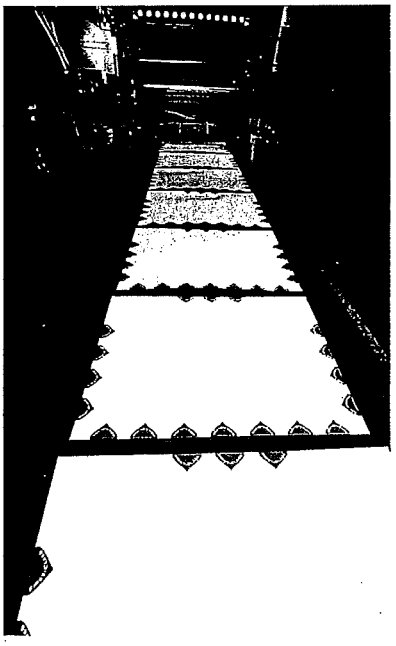

Printing and Converting Machinery

Solutions for roll registration and web tensioning.

Telecommunications

Solutions for ground-based and satellite-borne tracking antenna drives.

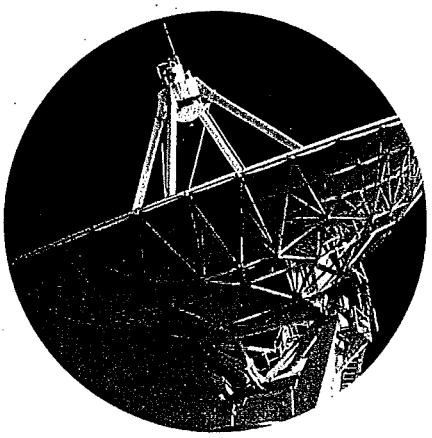

Medical Diagnostic Equipment

Solutions for lab testing equipment, positioning of scanning heads and patient tables.

Machine Tools

Solutions for automatic tool changers, turret drives, parts positioners and infeeds.

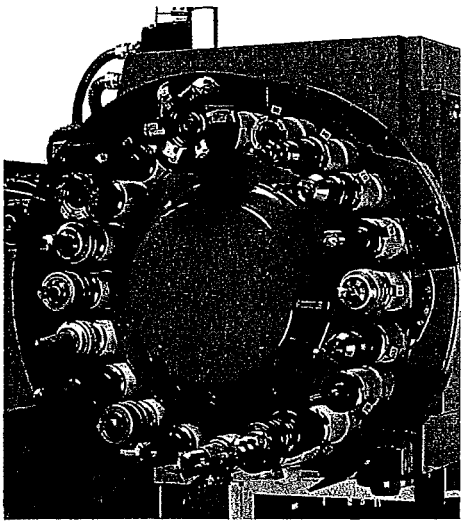

HARMONIC DRIVE PRODUCTS

Harmonic Drive Technologies provides customers with a range of products, including gear systems, gearheads, servo actuators, vacuum actuators, electronics, and specialty items, all of which are dedicated to bringing solutions to motion control problems.

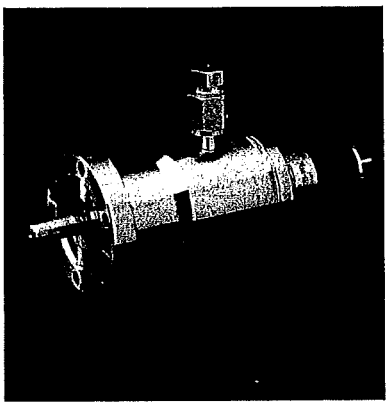

CHAMBERLINK™ HHA SERIES VACUUM SERVO ACTUATORS

A servo actuator for the semiconductor equipment industry that delivers precise rotary motion into a vacuum chamber without using shaft seals or magnetic couplings.

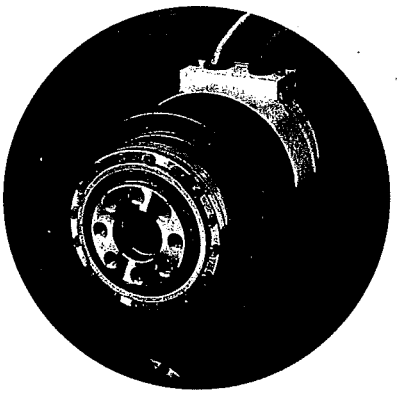

POWERHUB™ HKM SERIES HOLLOW SHAFT SERVO ACTUATORS

A servo actuator with a hole through the middle to allow the passage of vacuum lines, wiring harnesses, concentric shafting, cooling lines and similar items.

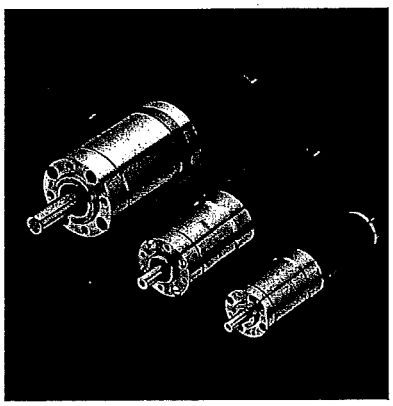

SERVO ACTUATORS

Combined servomotor, gear reduction, and encoder. These are all very powerful for their size and offer very accurate positioning.

PSA

Small, fast-response DC servo actuators.

PSF-A

Flange-output, fast-response brushless servo actuators.

PSS-A

Shaft-output, fast-response brushless servo actuators.

GEARHEADS AND REDUCERS

Housed gear components (gearboxes) complete with precision output bearings and optional motor adapters.

High-Ratio Shaft Output Gearheads

PSA-G

Small gearheads.

PSS-G

Midsize gearheads.

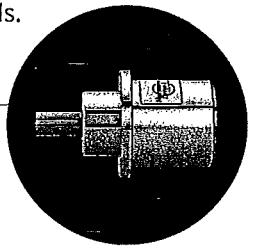

High-Ratio Flange Output Gearheads

PSF-G

Midsize gearheads.

RGH

Robot gearheads.

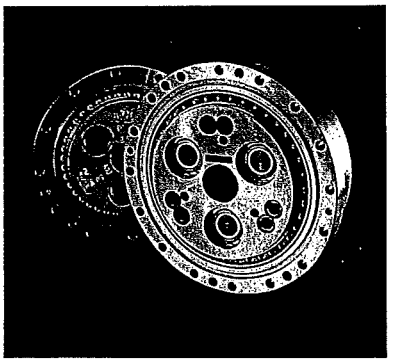

RV DRIVES

Heavy-duty cycloidal drives that provide high-ratio gear reduction in a very robust and compact design. Torsional rigidity is very high, as is the overload torque capacity.

RV-E Series

These are RV gears with built-in output bearings that will support large thrust and overhung loads.

RV-C Series

These are similar to RV-E gears but have a large hole through the middle to allow the passage of vacuum lines, wiring harnesses, concentric shafting, cooling lines and similar items.

RV Series

The basic RV drive that includes speed reduction but no output bearings.

Low Ratio Gearheads

Planetary Gearheads

Available in ratios as low as 3:1.

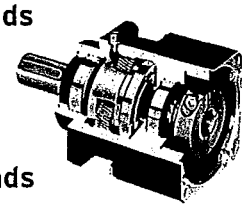

GH Series Gearheads

RV-based heavy-duty gearheads available in ratios of 11-31:1.

HARMONIC DRIVE PRODUCTS

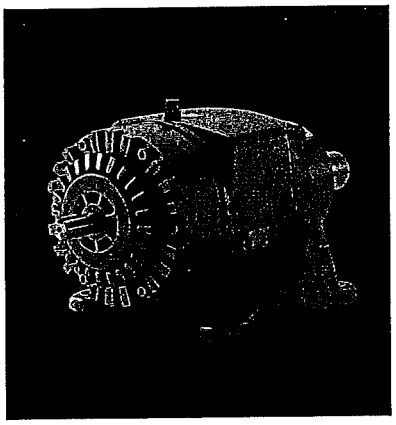

ISR INDUSTRIAL SPEED REDUCERS

Available with optional mounting feet for floor, wall or ceiling mounting.

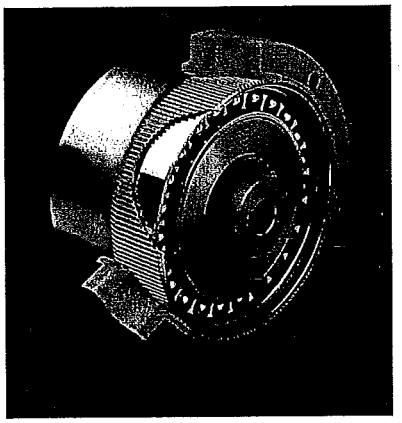

GEAR COMPONENTS

The basic gear systems that can be integrated directly into a machine design to maximize space utility or power take-off options.

Cup Components

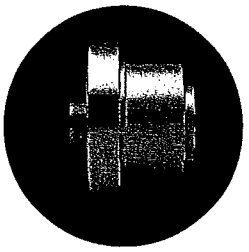

Harmonic Drive cup components are the core products that provide all the fundamental benefits of harmonic drive: zero backlash, compactness, high ratio, and high torque-to-weight ratio. They are offered in four types:

HDC

Traditional design, widest range of sizes and ratios.

HKC

Extended-contact tooth designed to provide greater torsional stiffness and peak torque ratings.

HKS

Extended-contact tooth design in a shortened cup configuration to reduce overall length.

HDT

A hollow shaft version of the HDC line that allows passage of vacuum lines, wiring, shafts, and cooling lines through the center.

Pancake Components

Harmonic Drive Pancake gear components are flat, axially compact harmonic drives. They provide a means for putting a lot of gear reduction into a tight space. They are offered in three types:

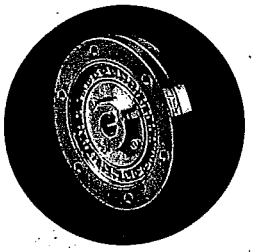

HDF

The thinnest - as thin as 11mm.

HDR

A thicker more robust pancake configuration with torque capability similar to that of cup components of comparable diameters.

HDA

The same as HDR, but with shoulders to accommodate bearings on the input element.

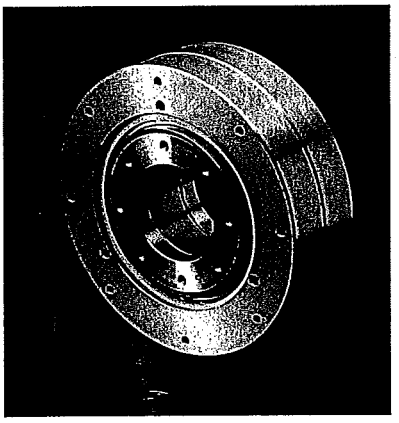

REGISTRATION/ PHASING COMPONENTS

Gear products for registration control in printing and converting machinery and other applications requiring fine angular adjustments of rotating elements.

1:1 Differential Gear Components

Designed specifically for providing a method to drive a roll at high speed and horsepower (1:1 ratio) while simultaneously providing precise trim adjustments through the same set of gears at high ratio (80:1 for example).

HDB

These components mount to the end of a roll to be driven as well as adjusted for registration. Roll drive power is applied at the outer diameter and trim power is applied to the center of the gearset.

HIO

Identical in function to HDB, but with the drive power applied through the center and trim power applied to the OD. This is a special order item.

Manual Phase Adjusters

HDI Infinit-Indexer®

Hand-operated position adjusters that provide fine tuning control of a shaft or hub's rotational position.

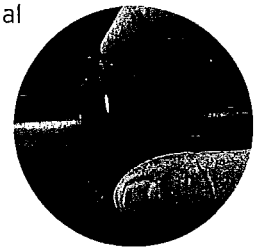

Contact Harmonic Drive Technologies:

by phone at **800-921-3332**
by fax at **978-532-9406**
by email at
info@harmonic-drive.com
internet at
www.harmonic-drive.com

Harmonic Drive Technologies
247 Lynnfield Street
Peabody, MA 01960

Teijin Seiki Company Ltd.
Nishishimbashi TS Bldg.
3-3-1, Nishishimbashi
Minato-Ku
Tokyo 105-8628 Japan
Tel: 81-3-3578-7461
Fax: 81-3-3578-7471

Teijin Seiki Europe GmbH
Klosterstraße 49
40211 Düsseldorf
Germany
Tel: 49-211-17379-0
Fax: 49-211-364-677

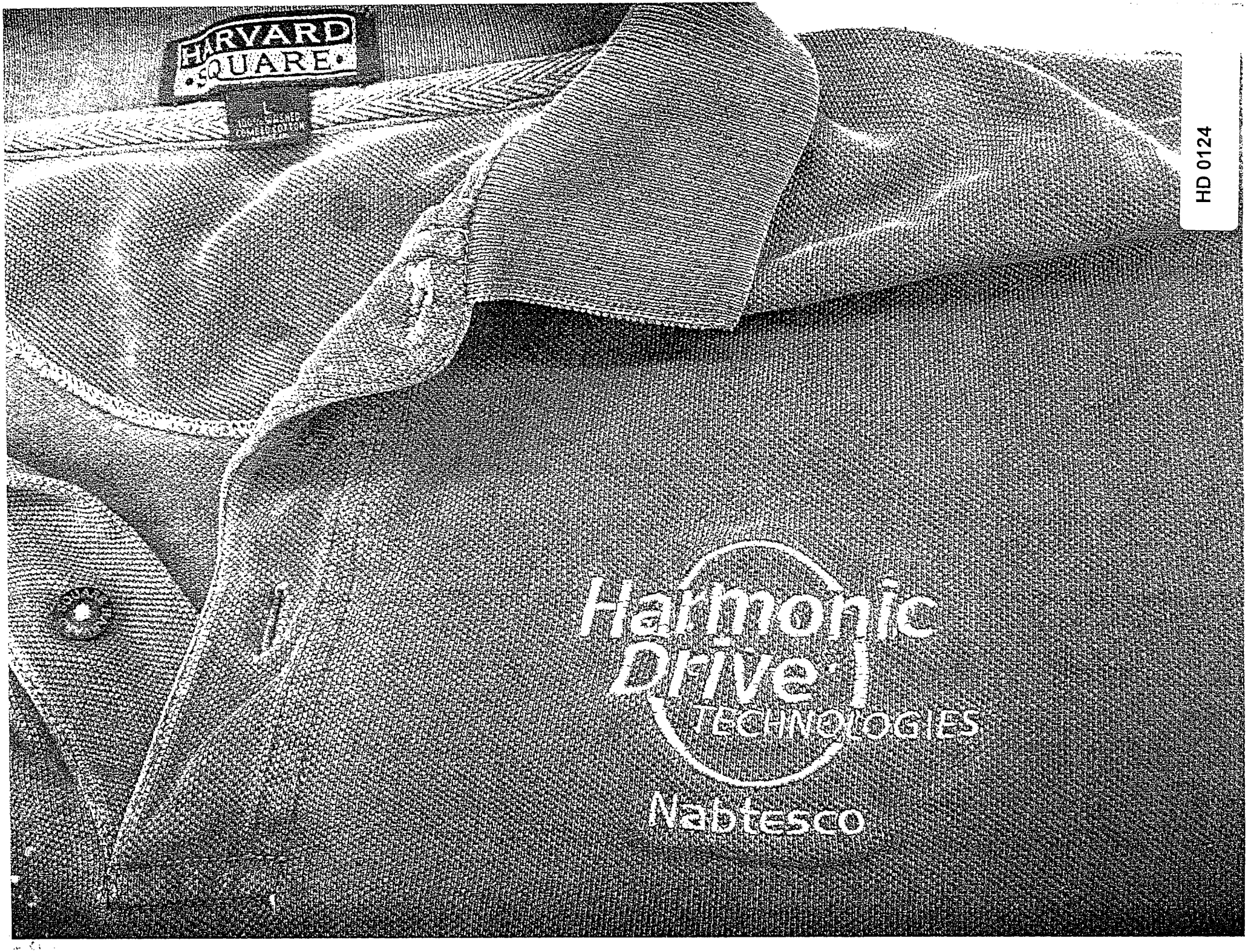

HD 0124

TRINOVIC
DUNDEE
TECHNOLOGY

HD 0125

HARVARD SQUARE

HD 0126

HARVARD SQUARE

THE BOSTON PUBLIC LIBRARY
REFERENCE DEPARTMENT
BOSTON

HD 0127

HD 0128

HD 0129

EXHIBIT 2

NEC/TOSHIBA
NEC TOSHIBA Space Systems, Ltd.

Empowered by Innovation **NEC**

SADM (Solar Array Drive Mechanism)

NTSpace SADM Series

Solar Array drive shaft

TYPE1 : Side Drive and Single Actuator type
→ for a dual Wing satellite
Small size (with Redundant coil winding)

TYPE2 : Side Drive and Dual Actuator type
→ for a single Wing satellite
High reliability (with Redundant Actuators and Clutches)

TYPE3 : Direct Drive type (latest)
→ for any satellite
Light weight & Low cost & Good maintainability

Either Grease or Solid Lubrication system can be applied on demand. MIL, NASA-std. or ECSS-std. compatible!

Major Specifications of SADM

Item	Type1	Type2	Type 3
Flight Model Outer View			
Inertia	60kg-m² MAX.		
Rotation Speed	Less than 31 min./rev. (Speed of higher than 12 deg./min.)	Less than 31 min./rev. (Speed of higher than 12 deg./min.)	Less than 4 min./rev. (Speed of higher than 90 deg./min.)
Pointing Accuracy	0.003 deg.(Nominal)		0.011 deg.(Nominal)
Motor Type	Bi-phases motor		
Average Power Consumption	less than 11.2 Watts in DRIVING MODE		less than 0.3Watts in CLOCK MODE (0.25deg./min.)
Power Transfer & Signal line	27 power lines (100V) 34 signal lines	60 power lines (50V) 43 signal lines	4 power lines (50) 23 signal lines
Position Measurement	Less than ±0.5 deg.		
Holding Torque (Motor off) (Motor on)	More than 12N·m More than 30N·m	More than 0.5N·m More than 0.8N·m	More than 14N·m More than 64N·m
Lubricant System	Solid Lubrication		Grease Lubrication
Thermal Range (at unit level)	-10 ~ +15 °C(Operating) -40 ~ +100 °C(Non-Ope)		-10 ~ +50 °C(Operating) -40 ~ +65 °C(Non-Ope)
Weight	8.7 kg	11.0 kg	3.7 kg
Volume	<Φ290mm × 330mm	<Φ330mm × 275mm	<Φ130mm × 175mm

SADM Type 1 is correspondent to 100 voltage bus systems (ETS-VIII).
SADM Type 2 can handle the transfer of more than 150 amperes (ALOS).
SADM Type 3 was qualified by In-orbit and On-the-ground Life test equivalent to 15 years for LEO (SERVIS project).

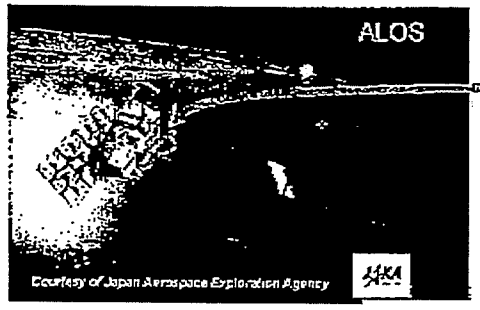

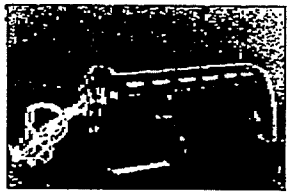

Type 2 SADM for ALOS

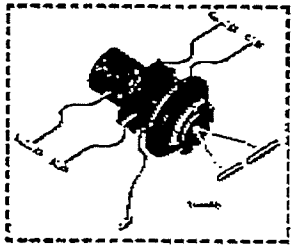

Type 3 SADM

Heritage of NTSpace SADM

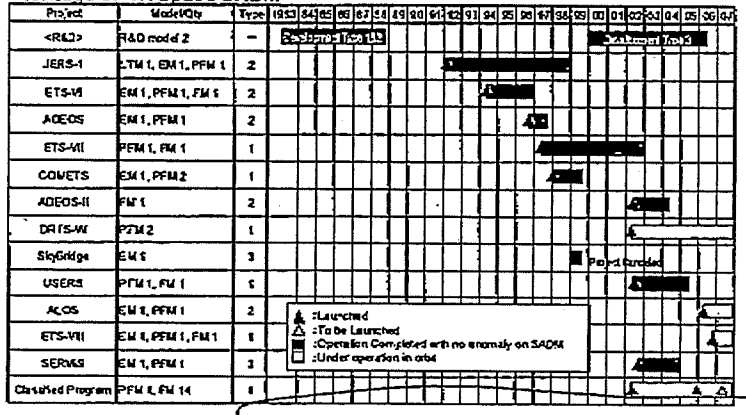

Trade name "Harmonic Drive®" is registered trademark of Harmonic Drive Systems Inc.

NEC Corporation Proprietary / NTSpace Proprietary

The 9th International Symposium on Transport Phenomena and
Dynamics of Rotating Machinery
Honolulu, Hawaii, 10th-14th February, 2002

THE MICRO HARMONIC DRIVE®:

A HIGH PRECISION MICRO GEAR SYSTEM MINIATURIZED BY LIGA

R. Degen, Micromotion GmbH, Mainz, Germany R. Slatter, Micromotion GmbH, Mainz, Germany

ABSTRACT

Micro gear systems have to adapt the high rotational speed of up to 100.000 rpm and the low output torque in a range of some µNm provided by current micro motors to the requirements of many different applications. In addition to their miniaturized size and low weight micro gear systems must also feature zero backlash and precise angular transmission characteristics if they are to be used in micro positioning applications, e.g. in medical equipment, micro robotics, fiber communications equipment and aerospace applications.

At Micromotion GmbH, the principle of operation of a Harmonic Drive® gear system has been applied to a micro gear system of only 1 mm axial length and 8 mm diameter using the LIGA technique. In addition to its small size the Micro Harmonic Drive® achieves a very high reduction ratio between 500 to 1032 : 1 in a single stage and transmits an output torque of 15 mNm with a minimal torque loss of less than 16 µNm. The individual gear components of the Micro Harmonic Drive® are manufactured from NiFe alloy. With a repeatability and lost motion of less than 10" the Micro Harmonic Drive® is ideally suited for applications in high precision micro positioning drive systems.

1. INTRODUCTION

Micro gear systems represent a key element in micro drive systems. Only by using suitable micro gear systems it is possible to apply existing micro motors operating with speeds of up to 100.000 min^{-1} at output torques in the range of some µNm [1] in a wide field of different applications. To access new innovative fields of application in the range of micro drive systems Micromotion GmbH has developed a new generation of high precision and zero backlash micro gear system: the Micro Harmonic Drive® (see Figure 1).

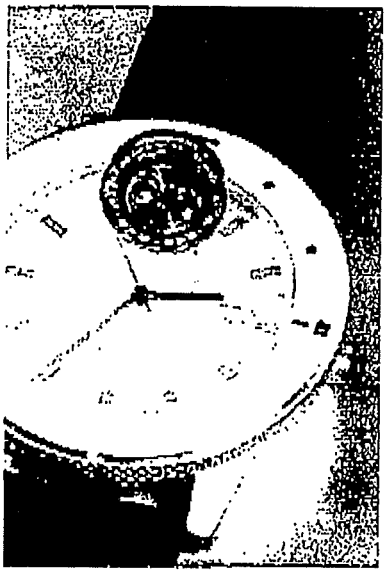

Figure 1: High precision micro gear system based on the Harmonic Drive® principle

2. THE MICRO HARMONIC DRIVE®

2.1. PRINCIPLE OF OPERATION

The principle of a Harmonic Drive® gear system stands out compared with other gear principles e.g. spur gears and planetary gear systems, because of its high precision and zero backlash transmission properties. Its exceptional properties have been proven for many years in the fields of industrial robots, machine tools, measuring machines, aerospace and medical equipment [2]. Harmonic Drive® gear systems can be classified into the flat type and the cup type (see Figure 2). The flat type gear system offers the following advantages, which are particularly important with reference to micro gear systems:

HD 0131

United States Patent [19]

Terauchi et al.

[11] **Patent Number: 4,557,662**

[45] **Date of Patent: Dec. 10, 1985**

[54] **INDUSTRIAL ROBOT**

[75] Inventors: **Tsuneo Terauchi; Yoshikazu Masuda,** both of Aichi, Japan

[73] Assignee: **Mitsubishi Denki Kabushiki Kaisha,** Tokyo, Japan

[21] Appl. No.: **478,122**

[22] Filed: **Mar. 23, 1983**

[30] **Foreign Application Priority Data**

Mar. 24, 1982 [JP] Japan 57-46544

[51] **Int. Cl.**[4] **B25J 3/00**

[52] **U.S. Cl.** ..... **414/744 R;** 901/14; 901/21; 901/23

[58] **Field of Search** ..... 414/744 R, 744 A; 74/640; 901/14, 15, 21, 23, 24

[56] **References Cited**

U.S. PATENT DOCUMENTS

4,392,776 7/1983 Shum ..... 414/744 R
4,431,366 2/1984 Inaba et al. 414/735

FOREIGN PATENT DOCUMENTS

112789 8/1980 Japan .
62778 5/1981 Japan .
114051 7/1982 Japan 414/640

Primary Examiner—Robert J. Spar
Assistant Examiner—Donald W. Underwood
Attorney, Agent, or Firm—Sughrue, Mion, Zinn, Macpeak & Seas

[57] **ABSTRACT**

An industrial robot is disclosed in which inertia is reduced and backlash substantially eliminated by mounting motors for the first and second movable arms on a stationary stand, and transmitting torque to the second arm by means of timing belts. A harmonic gear mechanism arranged at the juncture of the first and second arms reduces the speed of the output timing pulley. The belt arrangement requires no lubrication and is lighter and much quieter in operation than previous torque transmitting arrangements.

5 Claims, 4 Drawing Figures

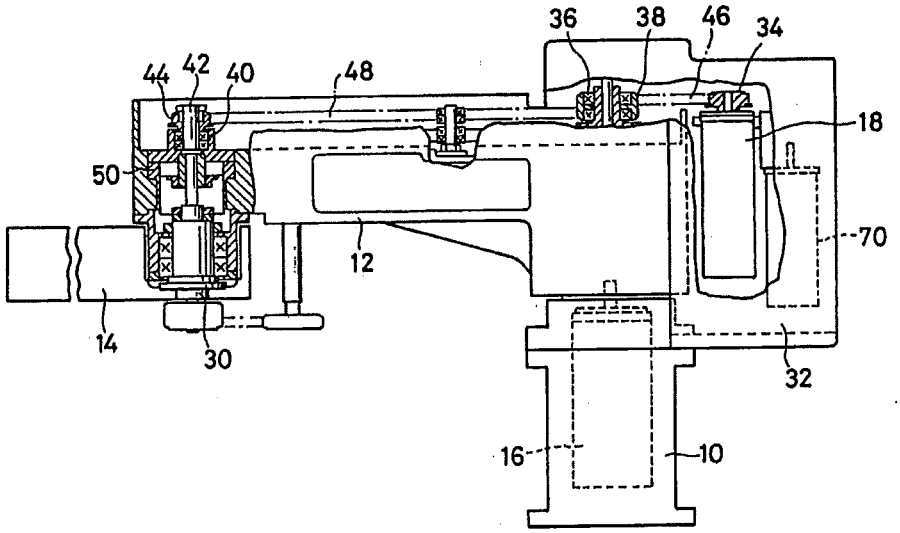

FIG. 1 PRIOR ART

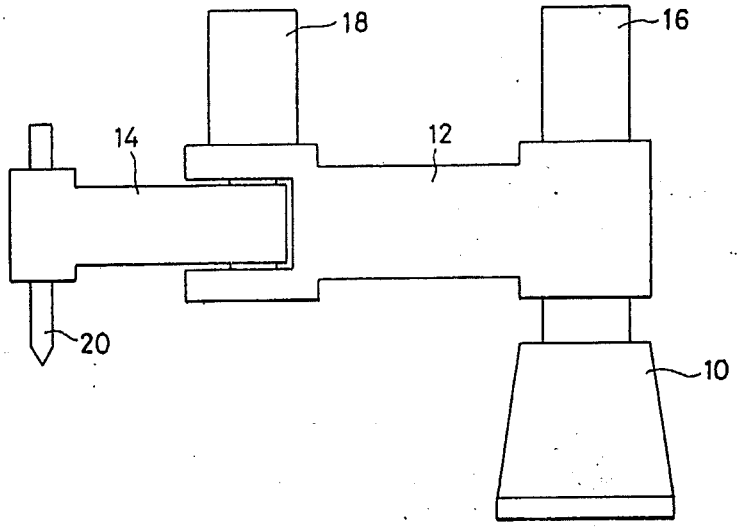

FIG. 2 PRIOR ART

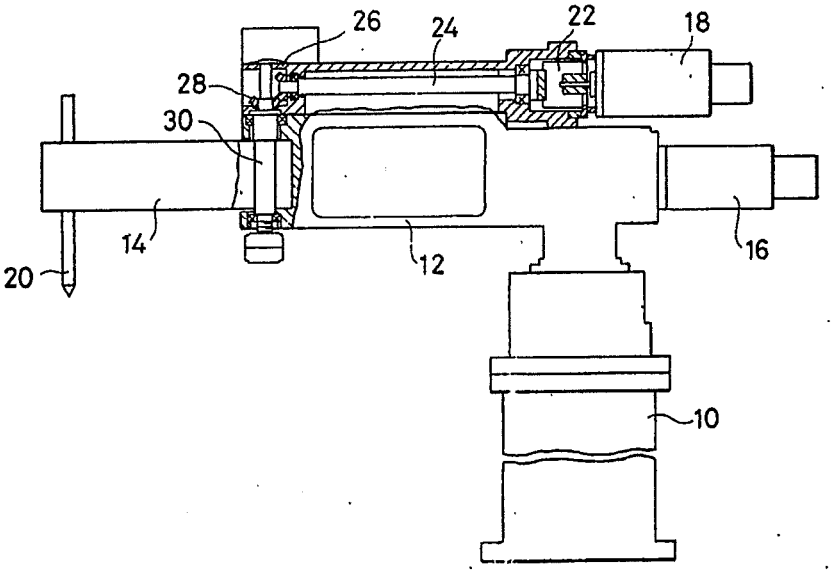

FIG. 3

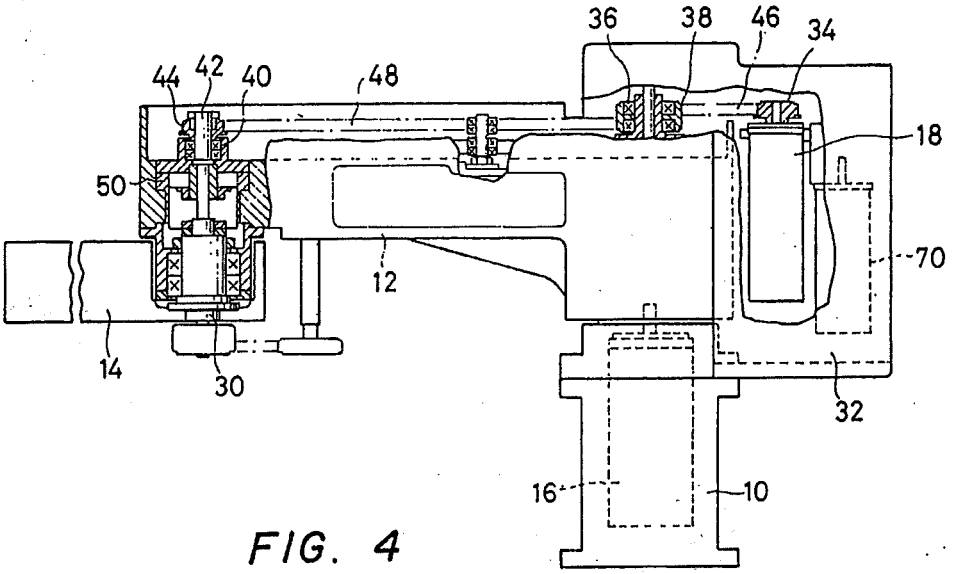
36
38
46
34
44
42
40
48
18
50
70
12
14
30
32
16
10

FIG. 4

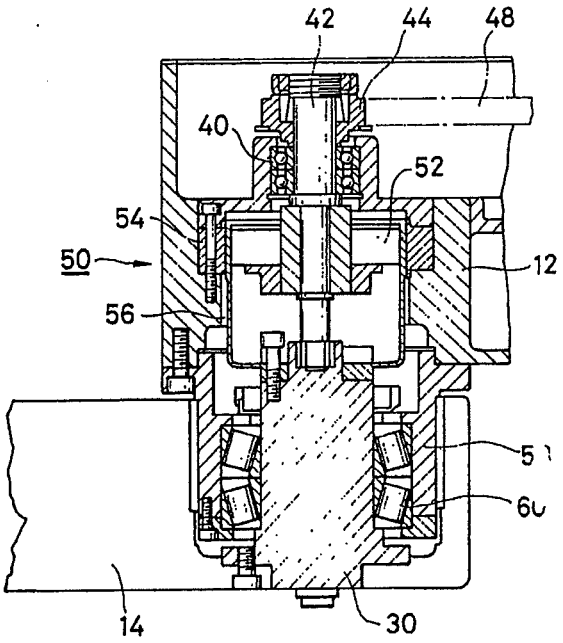
42
44
48
40
52
54
50
12
56
60
14
30

INDUSTRIAL ROBOT

BACKGROUND OF THE INVENTION

This invention relates to industrial robots, and more particularly to improvements in a horizontal articulation type industrial robot in which a first arm is rotatably mounted on the shaft of a stationary stand and a second arm is rotatably mounted at the end of the first arm.

Conventional horizontal articulation type industrial robots are shown in FIGS. 1 and 2.

As shown in FIG. 1, a first arm 12 is rotatably mounted on a stationary stand 10, and a second arm 14 extends from the end of the first arm 12. A motor 16 for driving the first arm is provided above the stationary stand 10, and a motor 18 for driving the second arm is provided on the end of the first arm 12. The end of the second arm 14 is coupled to a suitable hand 20. In this industrial robot, the first arm 12, the second arm 14 and the second arm driving motor 18 protrude sidewardly, and this part of the robot is relatively large in weight. Therefore, the arms 12 and 14 and the stationary stand 10 are liable to bend, and the robot itself is not suitable for high speed operations.

The industrial robot shown in FIG. 2 is an improvement of the robot of FIG. 1. In FIG. 2, those components which have been described with reference to FIG. 1 are designated by the same reference numerals, and a description thereof is therefore omitted.

In this industrial robot, the first arm driving motor protrudes in a direction opposite the direction of protrusion of the first arm 12, and the second arm driving motor 18 is provided with a planet type speed reducing unit 22 and is secured to the upper surface of the first arm 12 above the stationary stand 10. The output of the speed reducing unit 22 is transmitted through a shaft 24 to a bevel gear 26 at the end of the shaft 24, to rotate the bevel gear. The rotation of the gear 26 is transmitted through a bevel gear 28 to a shaft 30 integral with the second arm 14, to turn the shaft 30 and accordingly the second arm 14.

The planet type speed reducing unit 22 may be one bearing the trademark "Harmonic Drive" of Harmonic Drive Systems Co. The unit can transmit power from the input side to the output side at a predetermined gear reduction ratio. However, since the power transmitting mechanism employs gears, not only it is necessary to employ a gear adjusting means, but also it is necessary to use sealing materials for lubrication. Furthermore, the mechanism suffers from problems in that the gears are noisy and are subject to wear. In addition, the robot is disadvantageous in that the second arm 14 is liable to play owing to the backlash encountered in the use of a gear, and accordingly the accuracy of positioning operations is lowered, with the result that the robot cannot be used for assembly operations of high accuracy.

In addition to the foregoing prior art, Japanese publication No. 55-112789 discloses an industrial robot, wherein rotary drive mechanisms for the first and second arms are provided on respective rotary shafts. That is, the drive motor for the second arm is disposed on the first arm, so that the moment of inertia of the first arm is large, which is disadvantageous in the movement of the first arm. Japanese publication No. 56-62778 discloses a drive motor (17) for the second arm (12). The drive motor is disposed at a position opposite the first arm (11) with respect to a main sleeve (4). Further, bevel gearing is used for power transmission to the second arm. However, speed reduction means is disposed between the gearing and the motor, and backlash of the gearing may affect working accuracy. Even though a desirable moving balance may be obtainable in the device according to this publication, the moment of inertia is large, so that high responsiveness is not obtainable.

SUMMARY OF THE INVENTION

In view of the foregoing, an object of the invention is to provide an industrial robot in which swinging movement can be achieved at high speed while positioning can be performed with high accuracy, and in which cables can be readily arranged, adjustment and lubrication are not required, and noise is scarcely made.

The foregoing object and other objects of the invention have been achieved by the provision of a horizontal articulation type industrial robot in which a first arm is rotatably provided on a stationary stand and a second arm is rotatably coupled to the end of the first arm, in which, according to the invention, a second arm driving motor is provided on the stationary stand at the rear of the first arm, and the rotation of the second arm driving motor is transmitted through timing belts and a planet type speed reducing unit to a shaft about which the second arm is rotated.

BRIEF DESCRIPTION OF THE DRAWINGS

FIGS. 1 and 2 are side views showing two examples of conventional horizontal articulation type industrial robots; and

FIGS. 3 and 4 show one example of an industrial robot according to this invention.

More specifically, FIG. 3 is a side view, with parts cut away, of the robot, and FIG. 4 is an enlarged sectional view of the front end portion of a first arm of the robot of FIG. 3.

DETAILED DESCRIPTION OF THE PREFERRED EMBODIMENTS

A preferred embodiment of this invention will now be described with reference to FIGS. 3 and 4. In FIGS. 3 and 4, those components which have been previously described with reference to FIGS. 1 and 2 are therefore similarly numbered and the preceding descriptions thereof are applicable.

A motor receiving box 32 is fixedly secured to the stationary stand 10. The second arm driving motor 18 is accommodated in the box 32. A timing pulley 34 is fixedly mounted on the output shaft of the motor 18. Two bearings 36 and a timing pulley 38 are arranged coaxially with the rotary shaft of the first arm 12. At the end of the first arm 12, a timing pulley 44 is fixedly mounted on a shaft 42 which is suported through bearings 40. A timing belt 46 in laid over the timing pulleys 34 and 38, and a timing belt 48 is laid over the timing pulleys 38 and 44. The lower portion of the shaft 42 is coupled through a planet type speed reducing unit 50 to the shaft 30 which is secured to the second arm 14 for rotation of the latter.

The unit 50 (trademark "Harmonic Drive") is made up of an elliptic cam 52 secured to the shaft 42, an internal gear 54 fixed to the first arm 12, and an elastic gear 56 secured to the shaft 30, the number of teeth of the gear 56 being generally smaller by two than the number of teeth of the gear 54. Thus, the rotation of the shaft 42,

being reduced in speed by the ratio of two to the number of teeth of the elastic gear 56, is transmitted to the shaft 30. The unit 50 is the same as the conventional planet type speed reducing unit 22 shown in FIG. 2.

In FIGS. 3 and 4, reference numeral 58 designates a housing which extends downwardly from the end of the first arm 12; 60, bearings interposed between the housing 58 and the shaft 30; and 70, a motor for driving a band or the like which is connected to the end of the second arm 14.

In the industrial robot according to the invention, rotation of the second arm driving motor 18 is transmitted through timing belts 46 and 48 and the planet type speed reducing unit 50 to the shaft 30 for rotation of the second arm 14.

The robot shown in FIG. 3 is so designed that the first arm 12 is rotatable through about 270° to 280°, while in the conventional robot shown in FIG. 1 or 2 it is rotatable through 360°. However, no practical problem occurs in operation, because the second arm 14 is also rotatable through about 270° to 280°.

The second arm driving motor 18 is provided on the stationary stand 10 according to the invention. Therefore, the weight of the first arm 12 can be reduced, which makes it possible to reduce the inertia thereof, and not only can be first arm 12 swirl at high speed, but also the torque of the first arm driving motor 16 can be reduced.

The first arm driving motor 16 may be built into the stationary stand 10 or may be mounted on the rear end of the first arm 12 as shown in FIG. 2. However, it may be desirable to provide the first and second arm driving motors 16 and 18 on the stationary stand 10, because in this case the power cable and the like can be readily positioned.

Timing belts 46 and 48 are used to drive the second arm 14 as described above. Accordingly, when compared with a gear transmission system, the weight is small, the required space is also small, adjustment and lubrication are eliminated, and the generation of noise can be prevented.

The timing pulley 38 is provided coaxially with the rotary shaft of the first arm 12, and the torque of the second arm driving motor 18 is transmitted through the timing pulley 38 thus provided to the speed reducing unit 50. Therefore, no problems occur with the operations of the timing belts 46 and 48 even when the first arm 12 swings. This is due to the following reason: As the timing pulley 38 is mounted on the circumferential walls of the two ball bearings 36 which are mounted on the rotary shaft of the first arm 12, the pulley 38 is not affected by the rotation of the rotary shaft of the first arm 12.

The planet type speed reducing unit 50 is provided at the shaft 30 for rotation of the second arm 14 as described above. Therefore, the backlash of the timing pulleys 44 and 38 can be substantially neglected. Accordingly, a remarkable improvement in the positioning accuracy can be obtained.

That is, in the robot of the invention, unlike conventional robots in which the gears are arranged at the output side of the planet type speed reducing unit, the planet type speed reducing unit is instead provided at the output side, which is in this case the rear stage of the timing pulleys and timing belts, and accordingly, backlash is decreased with speed reduction, and is negligible.

As is apparent from the above description, in the industrial robot of the invention, work efficiency and positioning accuracy are improved while the inertia of the moving parts is lowered as a whole. Furthermore, the robot of the invention needs no lubricating structure or lubrication as is unavoidably required by conventional robots. Thus, the industrial robot of the invention is excellent as respects maintenance.

What is claimed is:

1. An industrial robot, comprising:
   - a stationary stand which supports a shaft;
   - a first arm rotatably mounted on said shaft;
   - motor receiving means fixedly secured to said stationary stand at the rear of said first arm;
   - speed reducing means mounted at the front end of said first arm;
   - a second arm secured to a second shaft coupled to the output side of said speed reducing means;
   - a second arm driving motor secured in said motor receiving means and having an output shaft on which a first timing pulley is fixedly mounted;
   - a first arm driving motor built into said stationary stand;
   - a first timing belt laid over said first timing pulley and a second timing pulley which is coaxially mounted on the end of said shaft supported by said stationary stand; and
   - a second timing belt laid over said second timing pulley and a third timing pulley mounted on a third shaft coupled to the input side of said speed reducing means, said second timing belt being accommodated inside said first arm.

2. An industrial robot as claimed in claim 1, said second timing pulley being interposed between said motor and said speed reducing unit in a torque transmission path of said second arm driving motor.

3. An industrial robot as claimed in claim 1, wherein said second and third timing pulleys are arranged inside said first arm.

4. An industrial robot as claimed in claim 1, said motor receiving means comprises a receiving box.

5. An industrial robot as claimed in claim 1, wherein said speed reducing means comprises a harmonic speed reducer.

* * * * *

Conventional horizontal articulation type industrial robots are shown in FIGS. 1 and 2.

As shown in FIG. 1, a first arm 12 is rotatably mounted on a stationary stand 10, and a second arm 14 extends from the end of the first arm 12. A motor 16 for driving the first arm is provided above the stationary stand 10, and a motor 18 for driving the second arm is provided on the end of the first arm 12. The end of the second arm 14 is coupled to a suitable hand 20. In this industrial robot, the first arm 12, the second arm 14 and the second arm driving motor 18 protrude sidewardly, and this part of the robot is relatively large in weight. Therefore, the arms 12 and 14 and the stationary stand 10 are liable to bend, and the robot itself is not suitable for high speed operations.

The industrial robot shown in FIG. 2 is an improvement of the robot of FIG. 1. In FIG. 2, those components which have been described with reference to FIG. 1 are designated by the same reference numerals, and a description thereof is therefore omitted.

In this industrial robot, the first arm driving motor protrudes in a direction opposite the direction of protrusion of the first arm 12, and the second arm driving motor 18 is provided with a planet type speed reducing unit 22 and is secured to the upper surface of the first arm 12 above the stationary stand 10. The output of the speed reducing unit 22 is transmitted through a shaft 24 to a bevel gear 26 at the end of the shaft 24, to rotate the bevel gear. The rotation of the gear 26 is transmitted through a bevel gear 28 to a shaft 30 integral with the second arm 14, to turn the shaft 30 and accordingly the second arm 14.

The planet type speed reducing unit 22 may be one bearing the trademark "Harmonic Drive" of Harmonic Drive Systems Co. The unit can transmit power from the input side to the output side at a predetermined gear reduction ratio. However, since the power transmitting mechanism employs gears, not only it is necessary to employ a gear adjusting means, but also it is necessary to use sealing materials for lubrication. Furthermore, the mechanism suffers from problems in that the gears are noisy and are subject to wear. In addition, the robot is disadvantageous in that the second arm 14 is liable to play owing to the backlash encountered in the use of a gear, and accordingly the accuracy of positioning operations is lowered, with the result that the robot cannot be used for assembly operations of high accuracy.

In addition to the foregoing prior art, Japanese publication No. 55-112789 discloses an industrial robot, wherein rotary drive mechanisms for the first and second arms are provided on respective rotary shafts. That is, the drive motor for the second arm is disposed on the first arm, so that the moment of inertia of the first arm is large, which is disadvantageous in the movement of the first arm. Japanese publication No. 56-62778 discloses a drive motor (17) for the second arm (12). The drive motor is disposed at a position opposite the first arm (11) with respect to a main sleeve (4). Further, bevel gearing is used for power transmission to the second arm. However, speed reduction means is disposed between the gearing and the motor, and backlash of the gearing may affect working accuracy. Even though a desirable moving balance may be obtainable in the device according to this publication, the moment of inertia is large, so that high responsiveness is not obtainable.

SUMMARY OF THE INVENTION

In view of the foregoing, an object of the invention is to provide an industrial robot in which swinging movement can be achieved at high speed while positioning can be performed with high accuracy, and in which cables can be readily arranged, adjustment and lubrication are not required, and noise is scarcely made.

The foregoing object and other objects of the invention have been achieved by the provision of a horizontal articulation type industrial robot in which a first arm is rotatably provided on a stationary stand and a second arm is rotatably coupled to the end of the first arm, in which, according to the invention, a second arm driving motor is provided on the stationary stand at the rear of the first arm, and

USPTO PATENT FULL-TEXT AND IMAGE DATABASE

Home | Quick | Advanced | Pat Num | Help

Bottom

View Cart | Add to Cart

Images

United States Patent **4,557,662**
Terauchi , et al. **December 10, 1985**

Industrial robot

Abstract

An industrial robot is disclosed in which inertia is reduced and backlash substantially eliminated by mounting motors for the first and second movable arms on a stationary stand, and transmitting torque to the second arm by means of timing belts. A harmonic gear mechanism arranged at the juncture of the first and second arms reduces the speed of the output timing pulley. The belt arrangement requires no lubrication and is lighter and much quieter in operation than previous torque transmitting arrangements.

Inventors: **Terauchi; Tsuneo** (Aichi, **JP**), **Masuda; Yoshikazu** (Aichi, **JP**)
Assignee: **Mitsubishi Denki Kabushiki Kaisha** (Tokyo, **JP**)
Appl. No.: **06/478,122**
Filed: **March 23, 1983**

Foreign Application Priority Data

Mar 24, 1982 [JP] 57-46544

Current U.S. Class: **414/744.5** ; 901/14; 901/21; 901/23
Current International Class: B25J 9/04 (20060101); B25J 9/02 (20060101); B25J 9/10 (20060101); B25J 003/00 ()
Field of Search: 414/744R,744A 74/640 901/14,15,21,23,24

References Cited [Referenced By]

U.S. Patent Documents

4392776	July 1983	Shum	
4431366	February 1984	Inaba et al.	**HD 0138**

Foreign Patent Documents

112789	Aug., 1980	JP
62778	May., 1981	JP
114051	Jul., 1982	JP

Primary Examiner: Spar; Robert J.
Assistant Examiner: Underwood; Donald W.
Attorney, Agent or Firm: Sughrue, Mion, Zinn, Macpeak & Seas

Claims

What is claimed is:

1. An industrial robot, comprising:

a stationary stand which supports a shaft;

a first arm rotatably mounted on said shaft;

motor receiving means fixedly secured to said stationary stand at the rear of said first arm;

speed reducing means mounted at the front end of said first arm;

a second arm secured to a second shaft coupled to the output side of said speed reducing means;

a second arm driving motor secured in said motor receiving means and having an output shaft on which a first timing pulley is fixedly mounted;

a first arm driving motor built into said stationary stand;

a first timing belt laid over said first timing pulley and a second timing pulley which is coaxially mounted on the end of said shaft supported by said stationary stand; and

a second timing belt laid over said second timing pulley and a third timing pulley mounted on a third shaft coupled to the input side of said speed reducing means, said second timing belt being accommodated inside said first arm.

2. An industrial robot as claimed in claim 1, said second timing pulley being interposed between said motor and said speed reducing unit in a torque transmission path of said second arm driving motor.

3. An industrial robot as claimed in claim 1, wherein said second and third timing pulleys are arranged inside said first arm.

4. An industrial robot as claimed in claim 1, said motor receiving means comprises a receiving box.

5. An industrial robot as claimed in claim 1, wherein said speed reducing means comprises a harmonic speed reducer.

Description

HD 0139

BACKGROUND OF THE INVENTION

This invention relates to industrial robots, and more particularly to improvements in a horizontal articulation type industrial robot in which a first arm is rotatably mounted on the shaft of a stationary stand and a second arm is rotatably mounted at the end of the first arm.

the rotation of the second arm driving motor is transmitted through timing belts and a planet type speed reducing unit to a shaft about which the second arm is rotated.

BRIEF DESCRIPTION OF THE DRAWINGS

FIGS. 1 and 2 are side views showing two examples of conventional horizontal articulation type industrial robots; and

FIGS. 3 and 4 show one example of an industrial robot according to this invention.

More specifically, FIG. 3 is a side view, with parts cut away, of the robot, and FIG. 4 is an enlarged sectional view of the front end portion of a first arm of the robot of FIG. 3.

DETAILED DESCRIPTION OF THE PREFERRED EMBODIMENTS

A preferred embodiment of this invention will now be described with reference to FIGS. 3 and 4. In FIGS. 3 and 4, those components which have been previously described with reference to FIGS. 1 and 2 are therefore similarly numbered and the preceding descriptions thereof are applicable.

A motor receiving box 32 is fixedly secured to the stationary stand 10. The second arm driving motor 18 is accommodated in the box 32. A timing pulley 34 is fixedly mounted on the output shaft of the motor 18. Two bearings 36 and a timing pulley 38 are arranged coaxially with the rotary shaft of the first arm 12. At the end of the first arm 12, a timing pulley 44 is fixedly mounted on a shaft 42 which is suported through bearings 40. A timing belt 46 in laid over the timing pulleys 34 and 38, and a timing belt 48 is laid over the timing pulleys 38 and 44. The lower portion of the shaft 42 is coupled through a planet type speed reducing unit 50 to the shaft 30 which is secured to the second arm 14 for rotation of the latter.

The unit 50 (trademark "Harmonic Drive") is made up of an elliptic cam 52 secured to the shaft 42, an internal gear 54 fixed to the first arm 12, and an elastic gear 56 secured to the shaft 30, the number of teeth of the gear 56 being generally smaller by two than the number of teeth of the gear 54. Thus, the rotation of the shaft 42, being reduced in speed by the ratio of two to the number of teeth of the elastic gear 56, is transmitted to the shaft 30. The unit 50 is the same as the conventional planet type speed reducing unit 22 shown in FIG. 2.

In FIGS. 3 and 4, reference numeral 58 designates a housing which extends downwardly from the end of the first arm 12; 60, bearings interposed between the housing 58 and the shaft 30; and 70, a motor for driving a band or the like which is connected to the end of the second arm 14.

In the industrial robot according to the invention, rotation of the second arm driving motor 18 is transmitted through timing belts 46 and 48 and the planet type speed reducing unit 50 to the shaft 30 for rotation of the second arm 14.

The robot shown in FIG. 3 is so designed that the first arm 12 is rotatable through about 270.degree. to 280.degree., while in the conventional robot shown in FIG. 1 or 2 it is rotatable through 360.degree.. However, no practical problem occurs in operation, because the second arm 14 is also rotatable through about 270.degree. to 280.degree..

The second arm driving motor 18 is provided on the stationary stand 10 according to the invention. Therefore, the weight of the first arm 12 can be reduced, which makes it possible to reduce the inertia thereof, and not only can be first arm 12 swirl at high speed, but also the torque of the first arm driving motor 16 can be reduced.

The first arm driving motor 16 may be built into the stationary stand 10 or may be mounted on the rear end of the first arm 12 as shown in FIG. 2. However, it may be desirable to provide the first and second

HD 0140

arm driving motors 16 and 18 on the stationary stand 10, because in this case the power cable and the like can be readily positioned.

Timing belts 46 and 48 are used to drive the second arm 14 as described above. Accordingly, when compared with a gear transmission system, the weight is small, the required space is also small, adjustment and lubrication are eliminated, and the generation of noise can be prevented.

The timing pulley 38 is provided coaxially with the rotary shaft of the first arm 12, and the torque of the second arm driving motor 18 is transmitted through the timing pulley 38 thus provided to the speed reducing unit 50. Therefore, no problems occur with the operations of the timing belts 46 and 48 even when the first arm 12 swings. This is due to the following reason: As the timing pulley 38 is mounted on the circumferential walls of the two ball bearings 36 which are mounted on the rotary shaft of the first arm 12, the pulley 38 is not affected by the rotation of the rotary shaft of the first arm 12.

The planet type speed reducing unit 50 is provided at the shaft 30 for rotation of the second arm 14 as described above. Therefore, the backlash of the timing pulleys 44 and 38 can be substantially neglected. Accordingly, a remarkable improvement in the positioning accuracy can be obtained.

That is, in the robot of the invention, unlike conventional robots in which the gears are arranged at the output side of the planet type speed reducing unit, the planet type speed reducing unit is instead provided at the output side, which is in this case the rear stage of the timing pulleys and timing belts, and accordingly, backlash is decreased with speed reduction, and is negligible.

As is apparent from the above description, in the industrial robot of the invention, work efficiency and positioning accuracy are improved while the inertia of the moving parts is lowered as a whole. Furthermore, the robot of the invention needs no lubricating structure or lubrication as is unavoidably required by conventional robots. Thus, the industrial robot of the invention is excellent as respects maintenance.

* * * * *

Images

View Cart | Add to Cart

Top

Home | Quick | Advanced | Pat Num | Help

US006564888B1

(12) **United States Patent**
Gomi et al.

(10) **Patent No.: US 6,564,888 B1**
(45) **Date of Patent: May 20, 2003**

(54) **BIPED MOBILE ROBOT**

(75) Inventors: **Hiroshi Gomi; Kazushi Hamaya; Takashi Matsumoto**, all of Wako (JP)

(73) Assignee: **Honda Giken Kogyo Kabushiki Kaisha**, Tokyo (JP)

(*) Notice: Subject to any disclaimer, the term of this patent is extended or adjusted under 35 U.S.C. 154(b) by 0 days.

(21) Appl. No.: **09/630,742**

(22) Filed: **Aug. 2, 2000**

(30) **Foreign Application Priority Data**

Aug. 30, 1999 (JP) 11-243448

(51) **Int. Cl.**[7] **B62D 57/02**

(52) **U.S. Cl.** **180/8.6**; 901/1

(58) **Field of Search** 180/7.1, 8.1, 187, 180/8.6, 8.3, 8.5; 901/1, 28, 46, 15, 50; 305/1, 3, 4; 74/490.01, 490.05; 318/568.12, 568.2, 568.11

(56) **References Cited**

U.S. PATENT DOCUMENTS

4,776,852 A	*	10/1988	Rubic	623/26
4,862,980 A	*	9/1989	Shkolnik	180/8.1
5,158,493 A	*	10/1992	Morgrey	180/8.6 X
5,241,875 A	*	9/1993	Kochanneck	901/28 X
5,357,433 A	*	10/1994	Takenaka et al.	901/1 X
5,445,235 A	*	8/1995	Gomi et al.	180/8.6
5,758,734 A	*	6/1998	Hong et al.	180/8.1
5,807,011 A	*	9/1998	Hong et al.	901/1 X
5,936,367 A	*	8/1999	Takenaka	318/568.12
6,193,002 B1	*	2/2001	Paakkunainen	180/8.1

FOREIGN PATENT DOCUMENTS

JP	62-97005	5/1987
JP	2-160482	6/1990
JP	5-62363	9/1993
JP	7-205069	8/1995
JP	11-33941	2/1999

OTHER PUBLICATIONS

Patent Abstract of Japan—JP 02 160482 A—A Publication Date: Jun. 20, 1990.

Natural Motion Generation of Biped Locomotion Robot Using Hierarchical Trajectory Generation Method Consisting of GA, EP Layers—Arakawa T. et al.—Proceedings of the 1997 IEEE International Conference on Robotics and Automation—vol. 1, conf. 14, Apr. 20, 1997, pp. 211–216.

Fuzzy Control of Dynamic Biped Walking Robot—Murakami S. et al.—1995 IEEE, vol. 1, Mar. 20, 1995—pp. 77–82.

Patent Abstract of Japan—JP 07 0205070 A—Publication date Aug. 8, 1995.

* cited by examiner

Primary Examiner—Robert P. Olszewski
Assistant Examiner—F. Zeender
(74) *Attorney, Agent, or Firm*—Arent Fox Kintner Plotkin & Kahn, PLLC

(57) **ABSTRACT**

In a biped mobile robot having at least a body and two leg links connected to the body, a parallel linkage is provided between the body and the two leg links such that each of the two leg links are movable relative to the body in a direction of the gravity axis. More specifically, the parallel linkage is composed of upper and lower links and right and left links each connected to the upper and lower links, and the body is connected to the upper and lower links through first and second fulcrums, while the two leg links are each connected to the right and left links. An actuator is provided at the second fulcrum to move the two leg links relative to the body in the gravity axis. Moreover, the body is connected to the parallel linkage through a joint such that the body is movable relative to the two leg links around the gravity axis. With this, the robot can effectively absorb and mitigate footfall impact, offer a high degree of freedom in gait design, thereby enabling rapid, energy-efficient locomotion in a stable attitude, and permit free body movement.

25 Claims, 13 Drawing Sheets

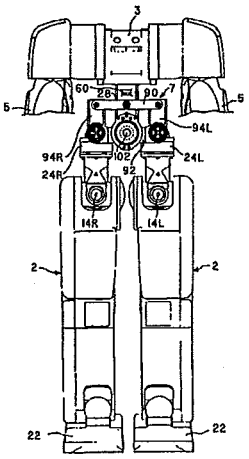

FIG. 1

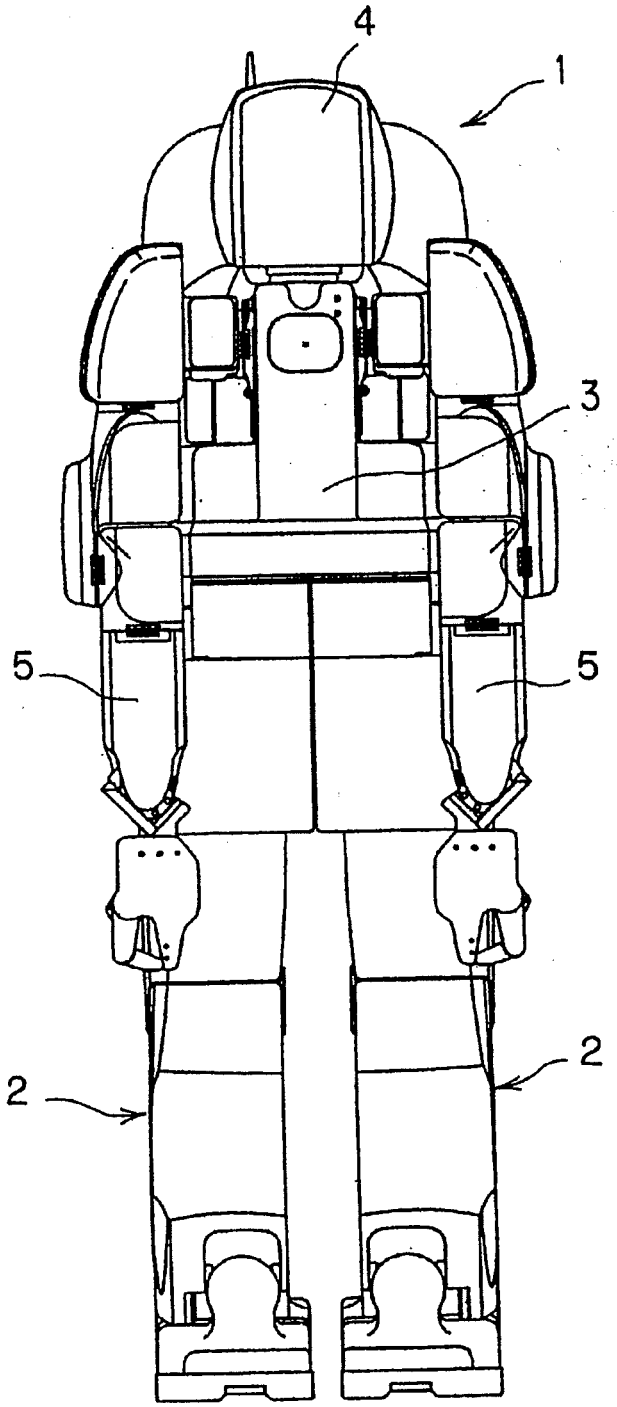

FIG. 2

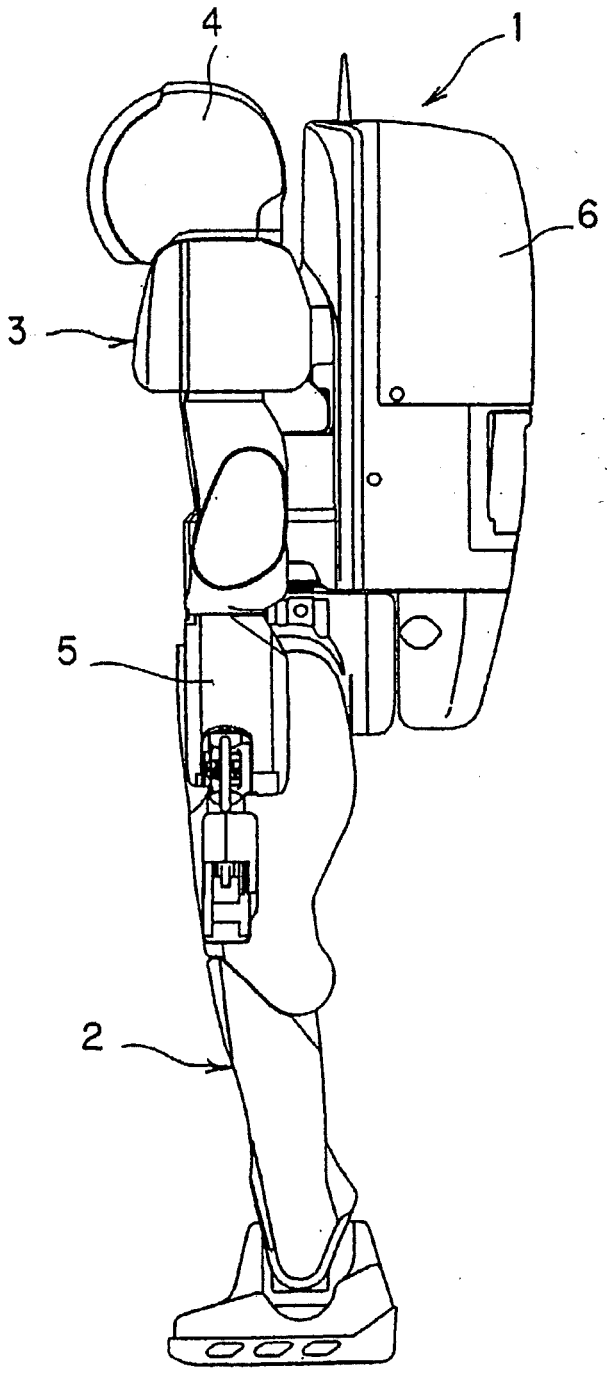

FIG. 3

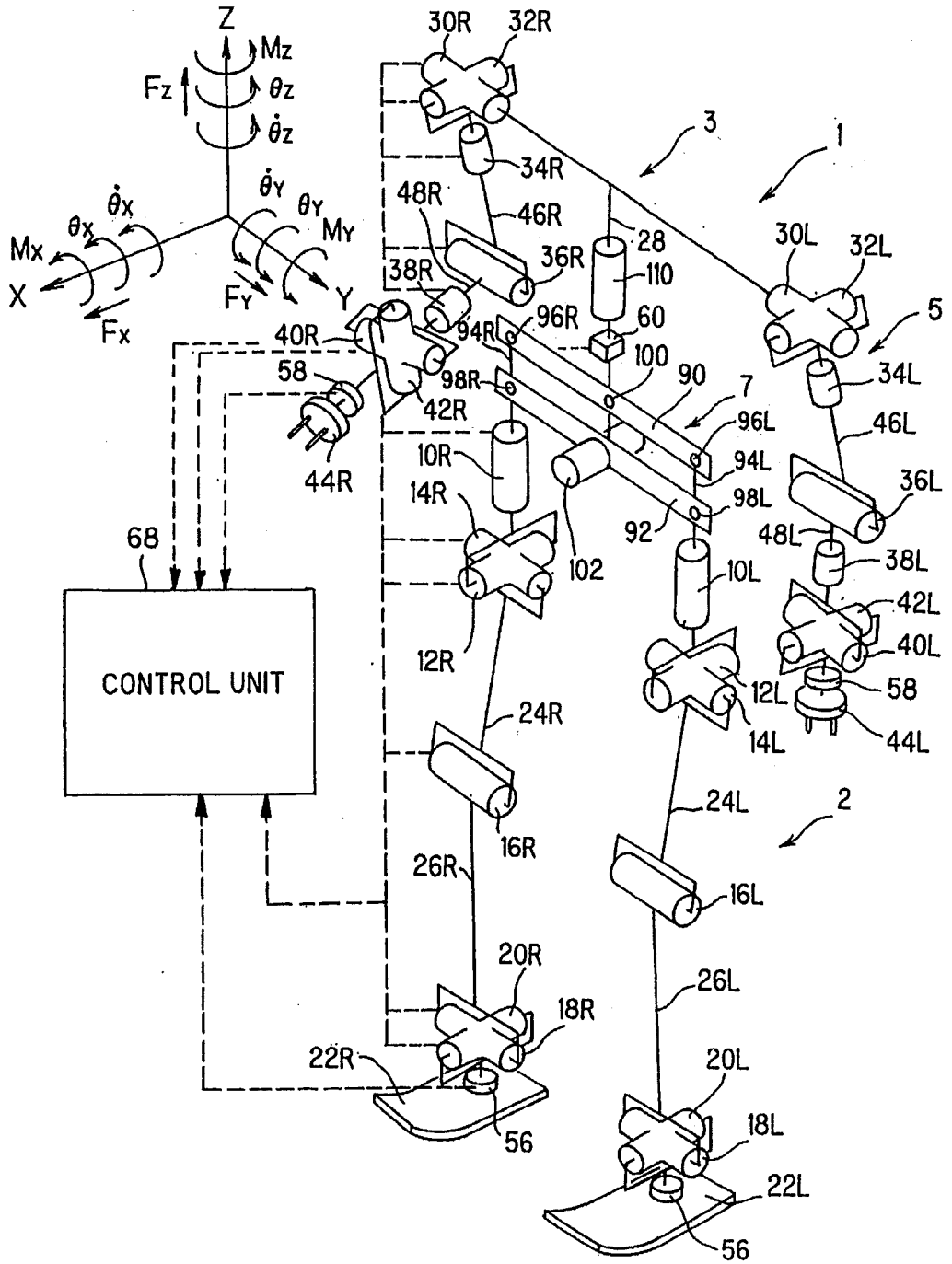
Z
Mz
Fz
θz
θ̇z
θ̇Y
θY
MY
θ̇X
θX
MX
X
FY
Y
FX
30R
32R
3
1
34R
48R
46R
28
36R
110
38R
30L
32L
5
40R
94R
96R
60
100
58
98R
90
7
34L
42R
96L
46L
44R
10R
94L
36L
14R
98L
92
48L
68
102
10L
38L
42L
CONTROL UNIT
12R
40L
12L
58
24R
14L
44L
24L
2
16R
26R
16L
20R
26L
18R
22R
20L
56
18L
22L
56

FIG. 4

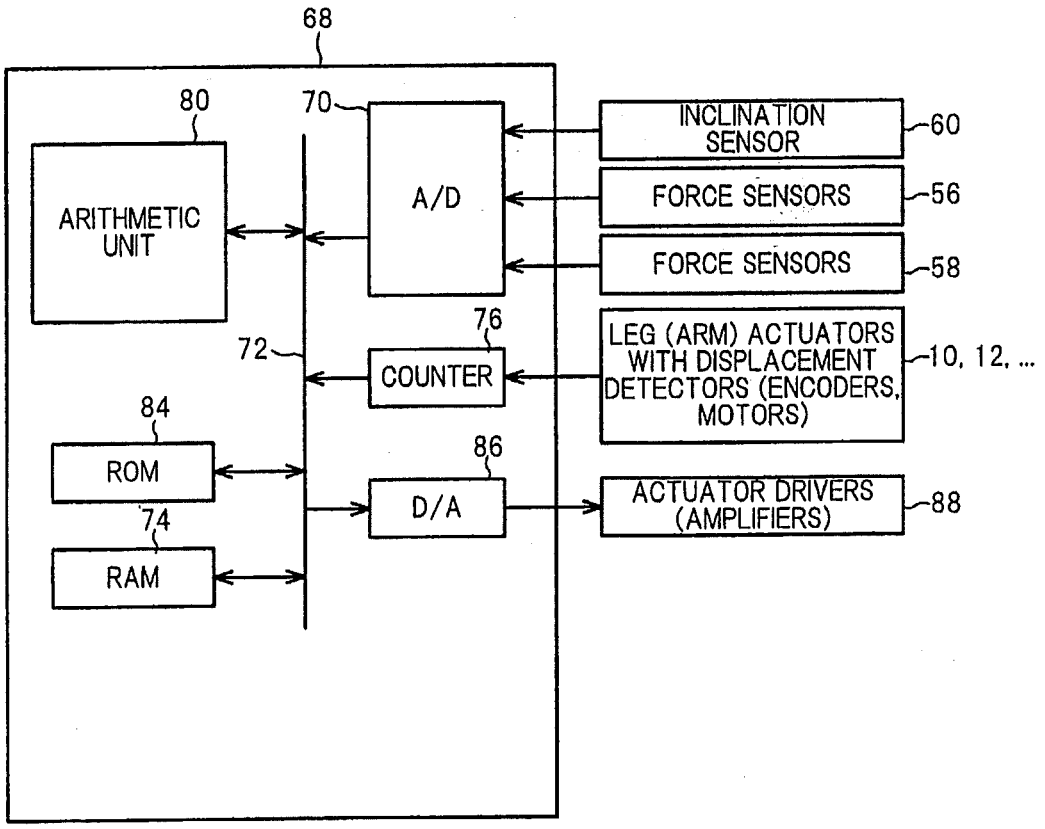
68
80
70
ARITHMETIC UNIT
A/D
INCLINATION SENSOR
60
FORCE SENSORS
56
FORCE SENSORS
58
76
72
COUNTER
LEG (ARM) ACTUATORS WITH DISPLACEMENT DETECTORS (ENCODERS, MOTORS)
10, 12, ...
84
ROM
86
D/A
ACTUATOR DRIVERS (AMPLIFIERS)
88
74
RAM

FIG. 5

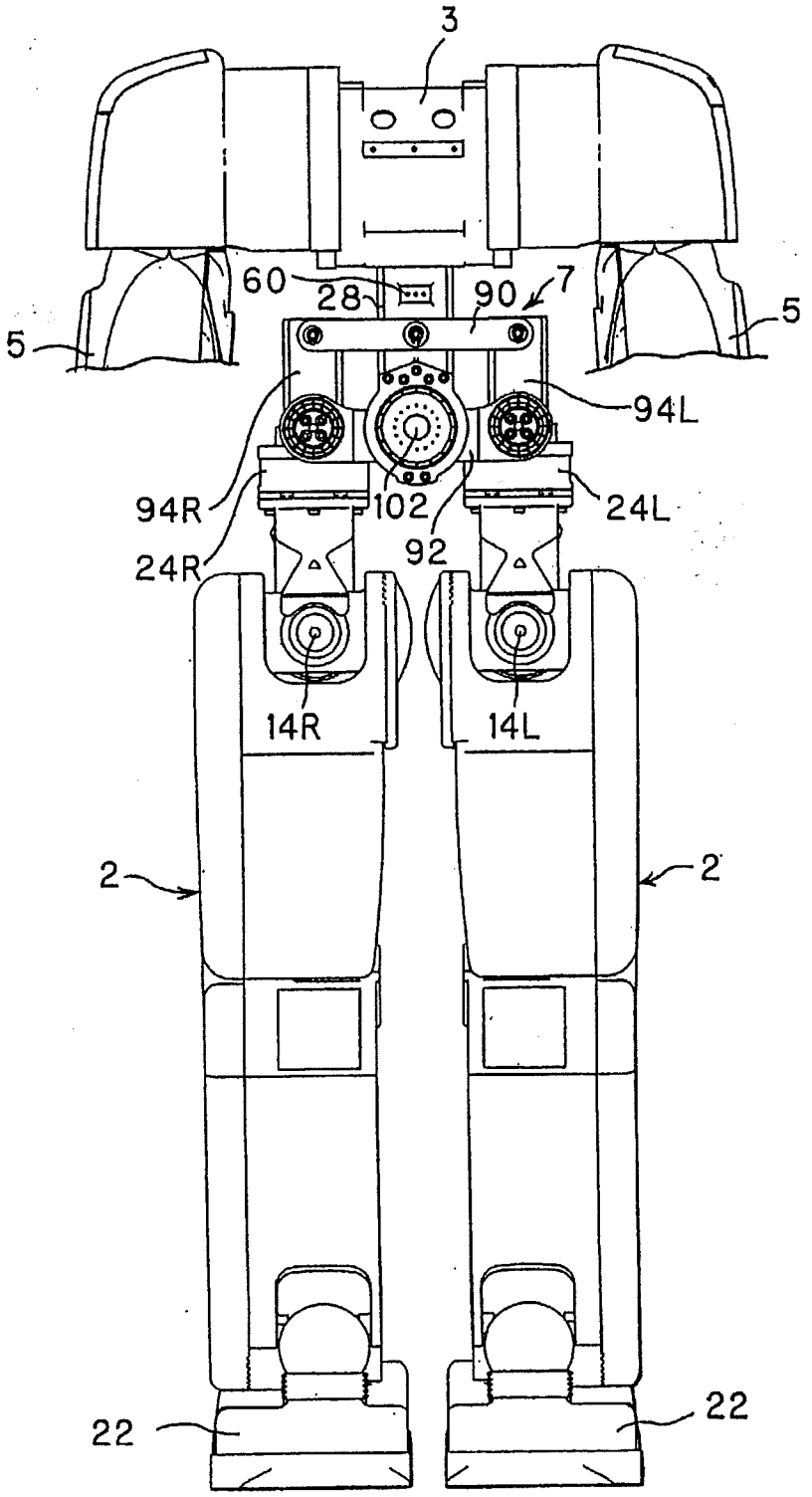

FIG. 6

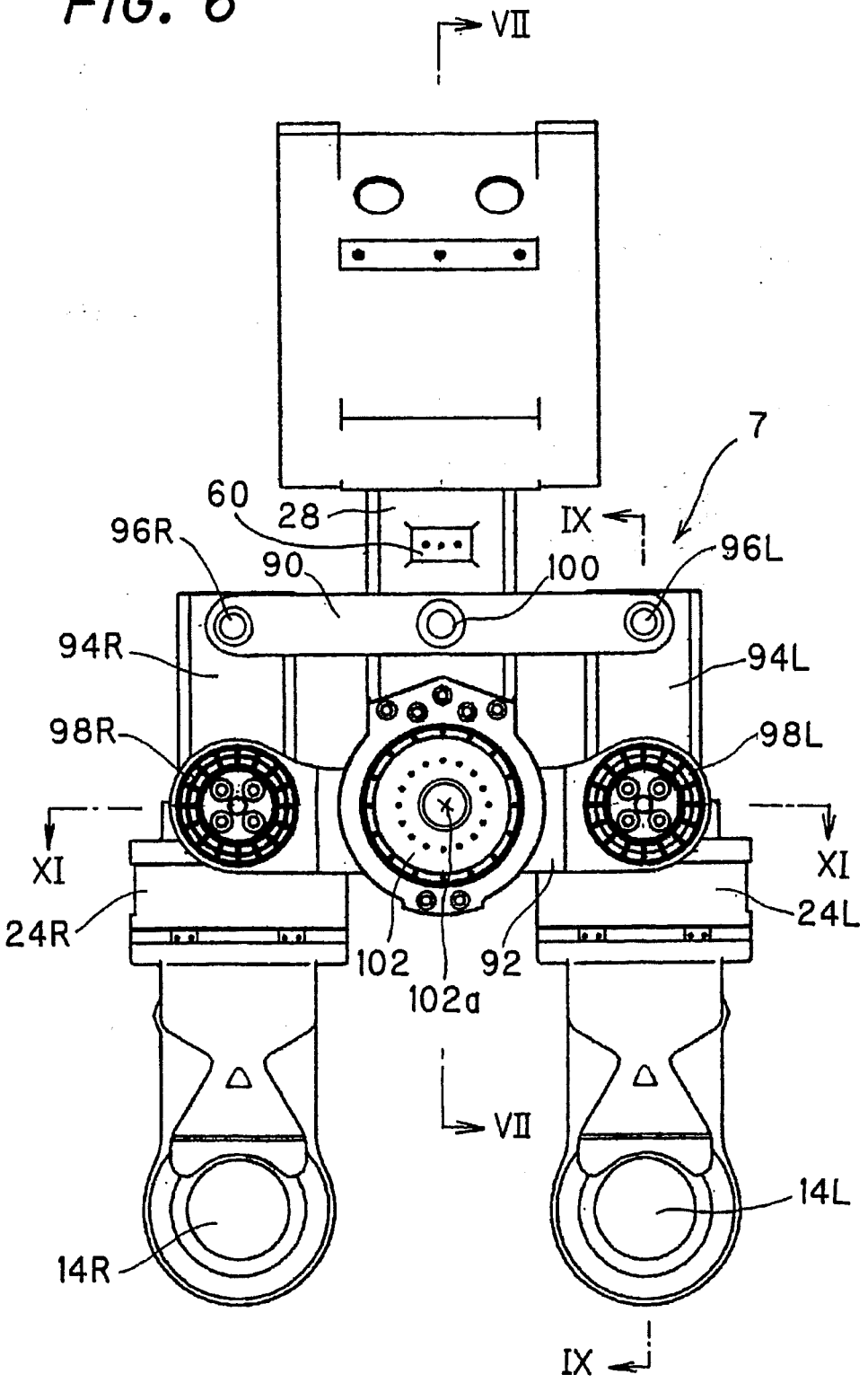
VII
7
60
28
IX
96R
90
100
96L
94R
94L
98R
98L
XI
XI
24R
24L
102
92
102a
VII
14L
14R
IX

FIG. 7

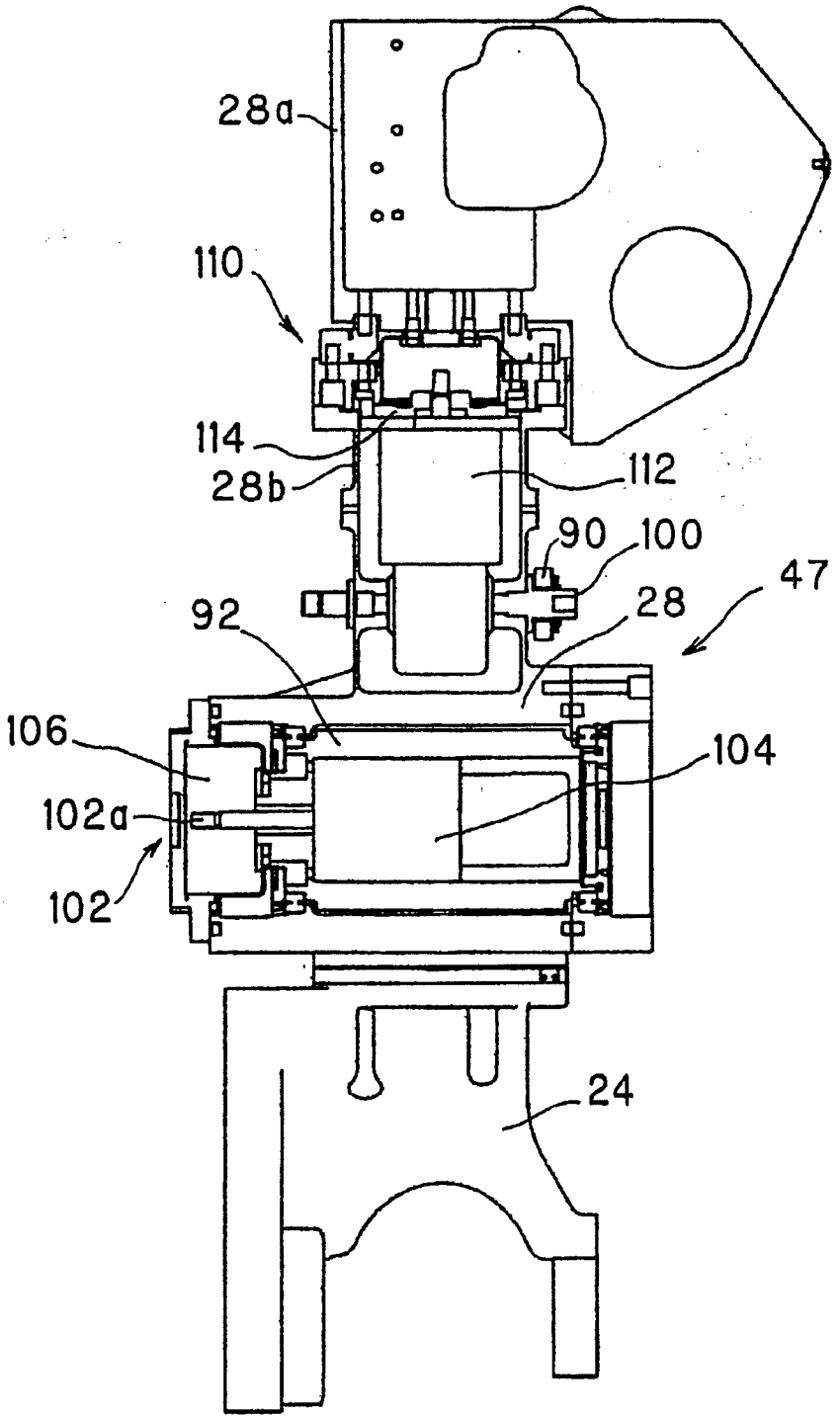

FIG. 8

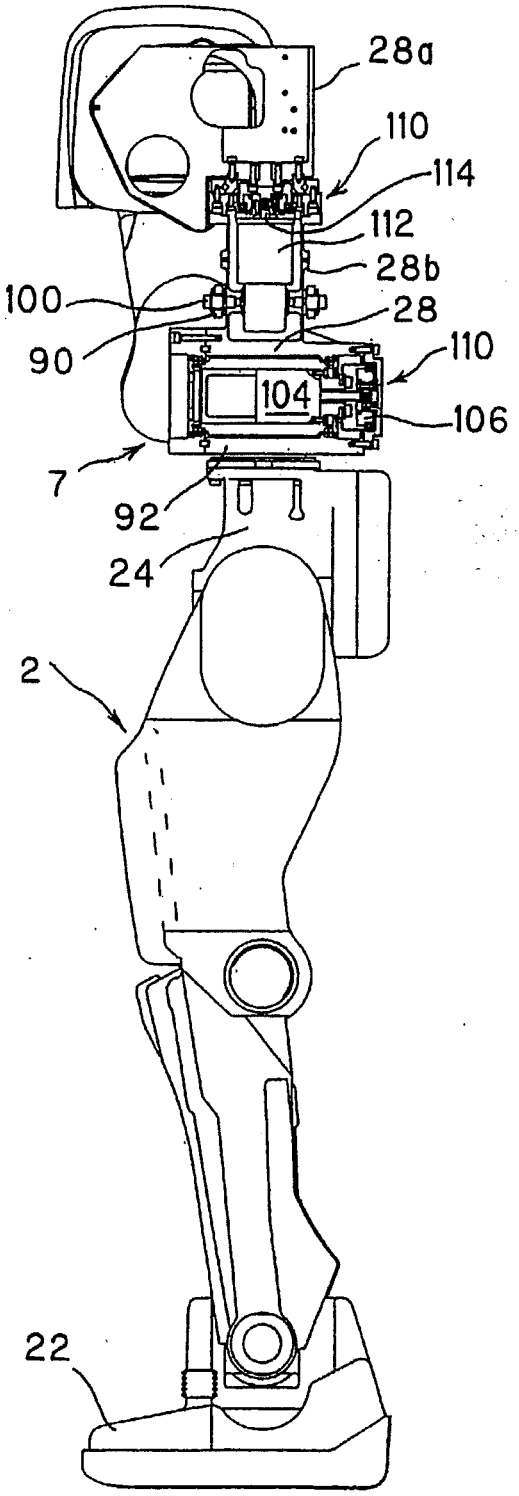

FIG. 9

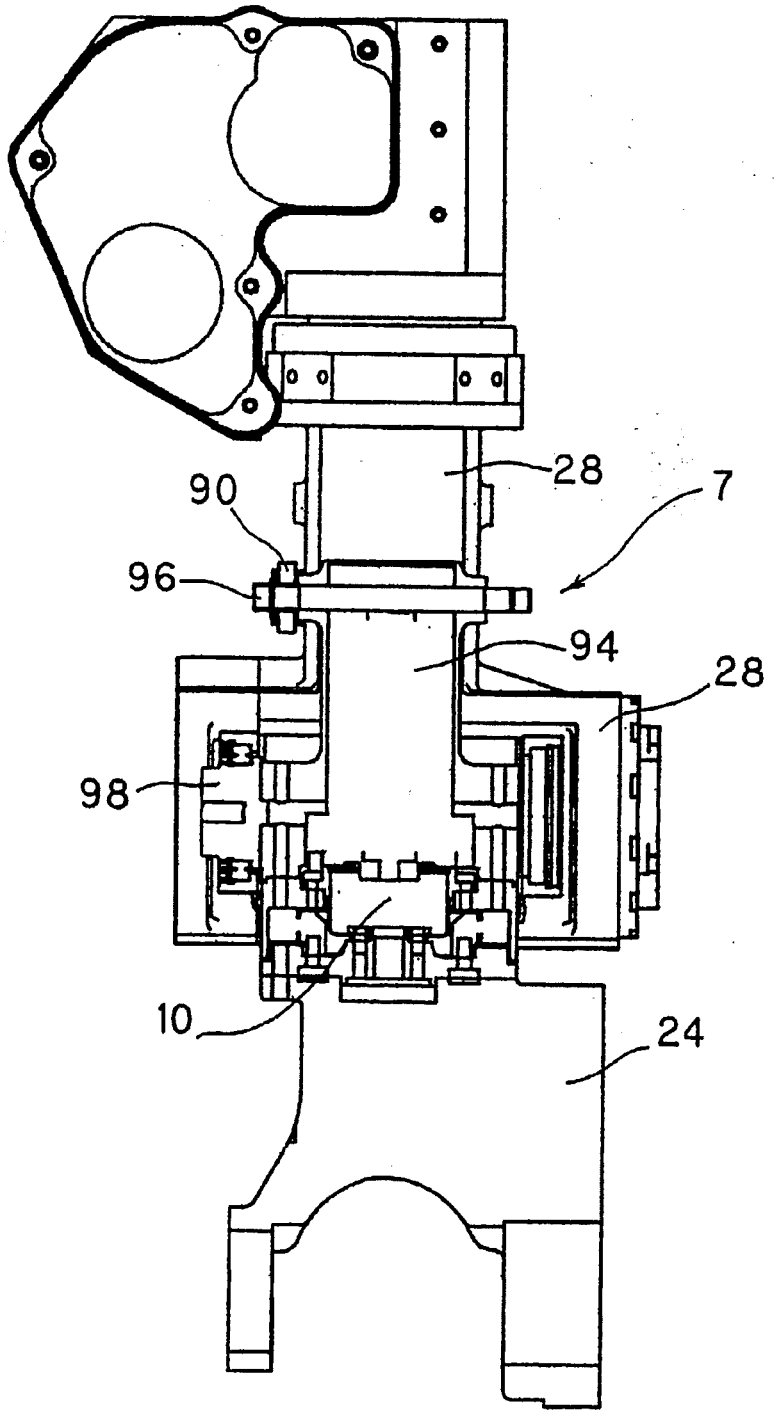

FIG. 10

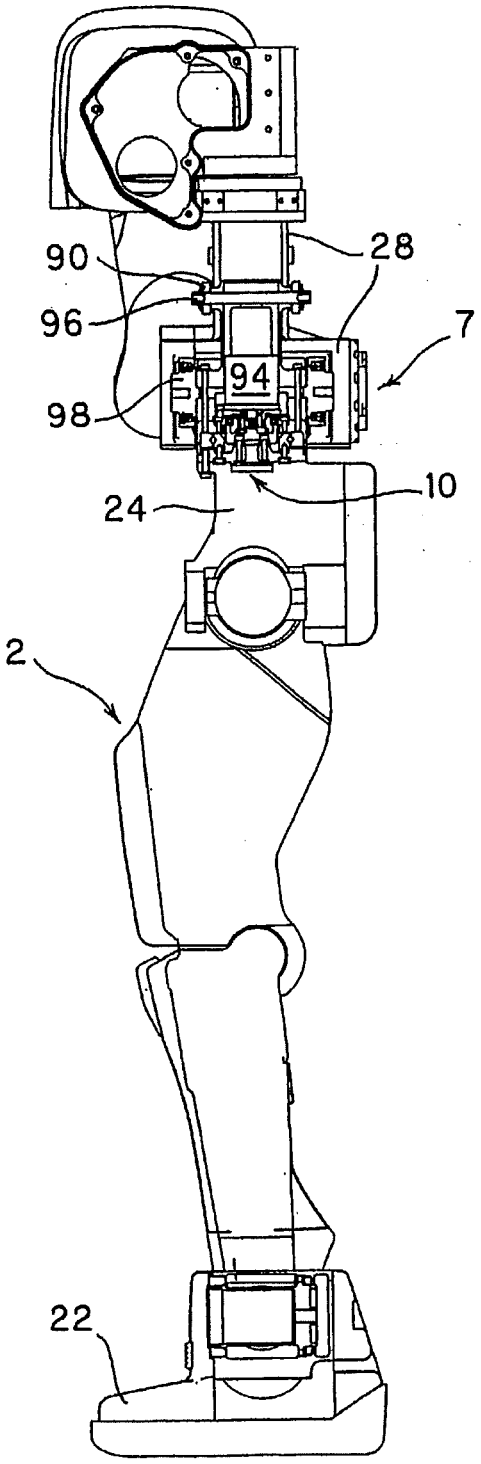

FIG. 11

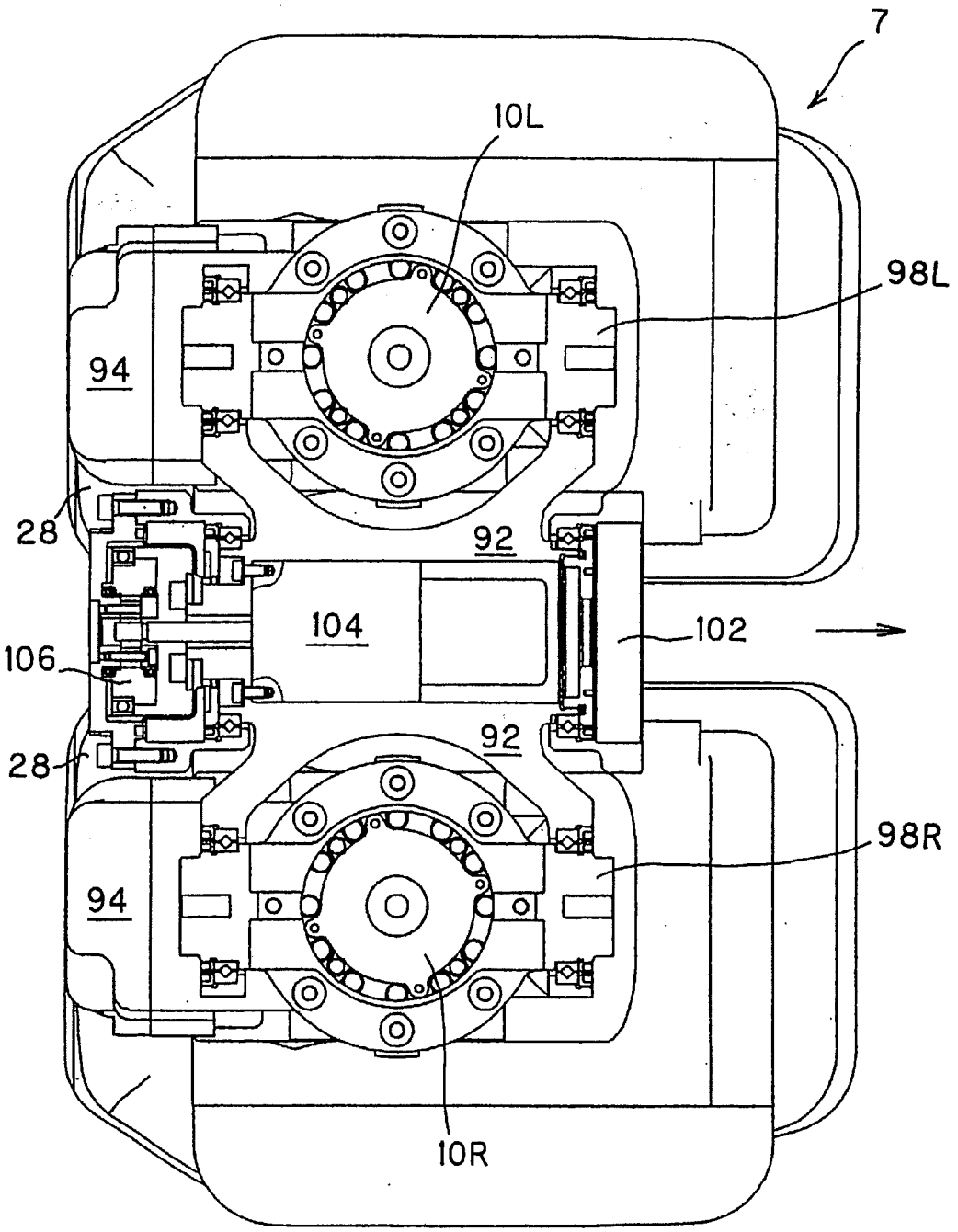

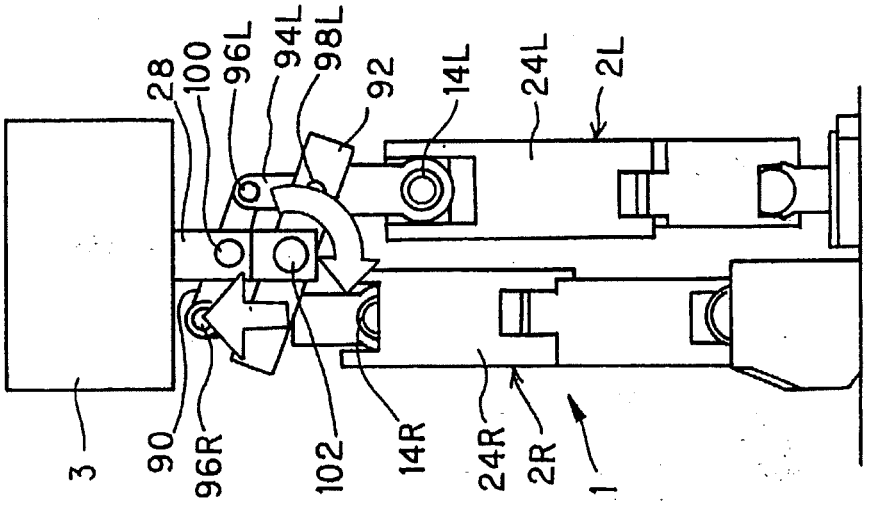

FIG. 12B

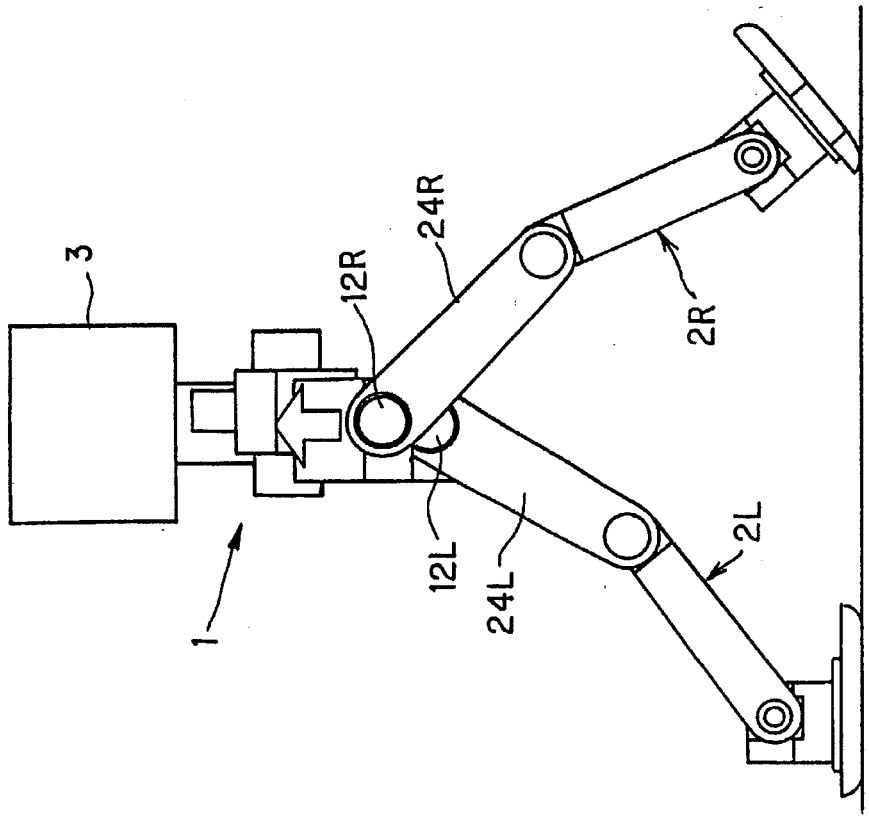

FIG. 12A

FIG. 13

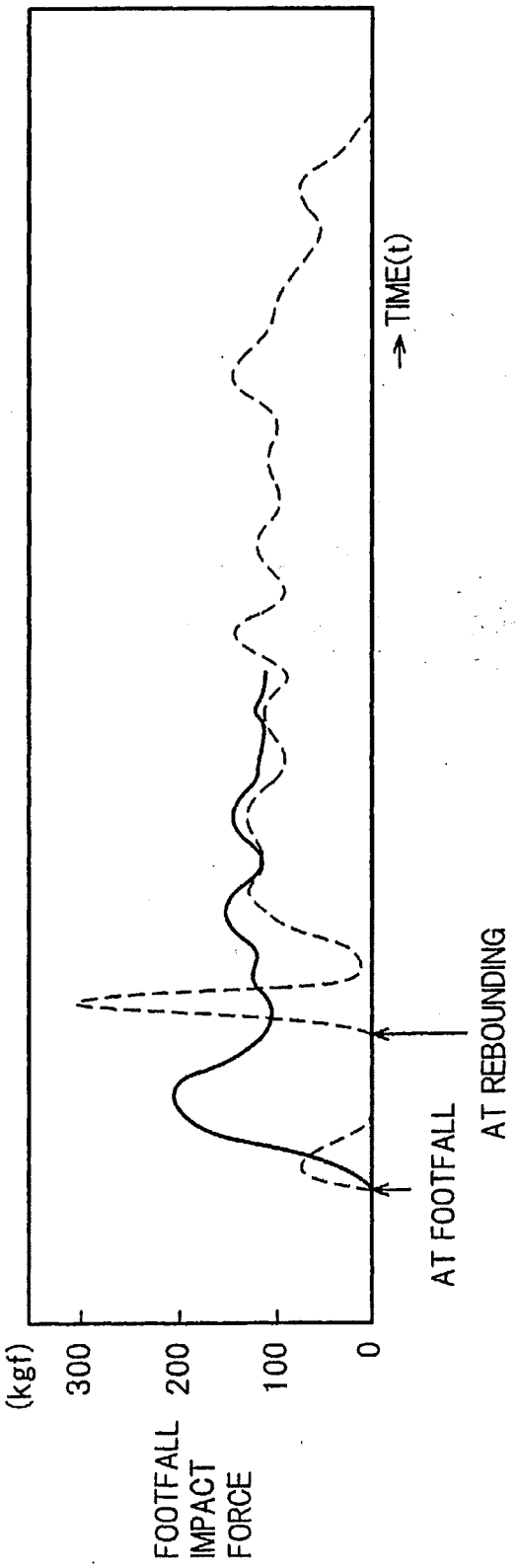
FOOTFALL IMPACT FORCE
(kgf)
300
200
100
0
AT FOOTFALL
AT REBOUNDING
→ TIME(t)

BIPED MOBILE ROBOT

BACKGROUND OF THE INVENTION

1. Field of the Invention

This invention relates to a biped mobile robot.

2. Description of the Related Art

Various technologies relating to biped mobile robots have been proposed, including, for example, those taught by Japanese Laid-open Patent Application Nos. Sho. 62(1987)-97005 and Sho. 62(1988)-97006. Moreover, a review of the prior art shows that various methods have been proposed for effectively absorbing the impact experienced by a biped mobile robot at footfall (touchdown of a foot during biped walking) owing to reaction forces from the ground.

For instance, Japanese Laid-open Patent Application No. Hei. 11(1999)-33941 teaches a technique of absorbing impact at footfall by providing the entire foot with a cushioning member. Among others that have been proposed is that of absorbing the impact at footfall by sharply bending the knee of the free leg when the robot is walking. Still another is that of Japanese Laid-open Patent Application No. Hei. 7(1995)-205069, which teaches a technique of canceling the spin force around the supporting leg by driving the arms during robot walking.

However, none of these prior art technologies provide a satisfactory solution. Assuming a robot weighing 130 kg, the impact received at footfall amounts to more than 300 kgf. An impact of this magnitude cannot be sufficiently absorbed by providing the whole foot with a shock-absorbing member. Moreover, if a soft shock-absorbing member of great thickness is used to cope with the strong impact at footfall, the robot becomes unstable when standing upright.

The technique of bringing the foot down with the knee of the free leg sharply bent can absorb strong footfall impact to some degree but is incapable of absorbing the footfall impact that arises during high-speed walking with long strides, because the knee of the free leg cannot be bent during such high-speed walking. Bending the knee of the free leg at every footfall also increases energy consumption.

In the technique of the aforesaid Japanese Laid-open Patent Application No. Hei. 7(1995)-205069 of canceling the spin force around the supporting leg by driving the arms during robot walking, the fact that the differing heights of the right and left feet during walking makes the robot body lean, causing the robot to swing laterally during walking. The robot's posture therefore becomes unstable during high-speed walking. Another problem is that the leaning of the body causes the gyroscope and/or G sensor (accelerometer) mounted on the body's back or head to output false signals that make walking control difficult. The driving of the arms also consumes additional energy.

A practical technology enabling absorption and mitigation of such footfall impact would expand the degree of freedom in robot gait design, enable rapid, energy-efficient locomotion in a stable attitude, and, by permitting free body movements, make it possible for the robot to work in, for example, a kneeling attitude.

SUMMARY OF THE INVENTION

An object of this invention is therefore to provide a biped mobile robot that can effectively absorb and mitigate footfall impact, offer a high degree of freedom in gait design, thereby enabling rapid, energy-efficient locomotion in a stable attitude, and permit free body movement.

For realizing this object, the present invention provides a biped mobile robot having at least a body and two leg links connected to the body; wherein the improvement comprises: a parallel linkage is provided between the body and the two leg links to connect the body to the two leg links such that each of the two leg links are movable relative to the body in a direction of gravity axis.

BRIEF DESCRIPTION OF THE DRAWINGS

The above and other objects and advantages of the invention will be more apparent from the following description and drawings, in which:

FIG. **1** is a front view of a biped mobile robot according to the invention;

FIG. **2** is a side view of the robot illustrated in FIG. **1**;

FIG. **3** is a skeleton view of the robot illustrated in FIG. **1** showing the internal structure of the robot;

FIG. **4** is a block diagram showing the details of a control unit illustrated in FIG. **1**;

FIG. **5** is a front view, partially in section, of the robot illustrated in FIG. **1** giving a partially broken-away view of a parallel linkage **7**;

FIG. **6** is a front view of the parallel linkage **7** illustrated in FIG. **5**;

FIG. **7** is a sectional view taken along line VII—VII of FIG. **6**;

FIG. **8** is a side view, partially in section, of the robot showing the connection between the parallel linkage illustrated in FIG. **7** and a robot body in reverse orientation from that in FIG. **7**;

FIG. **9** is a sectional view taken along line IX—IX in FIG. **6**;

FIG. **10** is a side view, partially in section, of the robot illustrated in FIG. **5** showing the connection between the parallel linkage illustrated in FIG. **9** and the robot body in reverse orientation from that in FIG. **9**;

FIG. **11** is a sectional view taken along line XI—XI of FIG. **6**, wherein the arrow indicates the direction of robot advance (x axis direction);

FIGS. **12A** and **12B** is a set of side and front views of the robot schematically illustrating how the robot is driven to move during walking; and

FIG. **13** is a graph illustrating observed data representing the footfall impact (floor reaction force) acting on the robot.

DETAILED DESCRIPTION OF THE PREFERRED EMBODIMENTS

A biped mobile robot that is an embodiment of the invention will now be explained with reference to the drawings.

FIGS. **1** and **2** are front and side views of the biped mobile robot.

As shown in FIG. **1**, the biped mobile robot (hereinafter referred to as "robot 1") is equipped with a pair of leg links (articulated legs) **2** and a body **3** located above the leg links

2. A head 4 is formed on the upper end of the body 3 and arm links (articulated arms) 5 are connected to opposite sides of the body 3. As shown in FIG. 2, a housing unit 6 is mounted on the back of the body 3 for accommodating, among other things, a control unit (explained later) and a power supply battery for driving the joints of the robot 1.

The internal structure of the robot 1 will now be explained chiefly with reference to FIG. 3.

As illustrated, the robot I has right and left leg links (legs) 2 each having six joints. (To make the arrangement easier to understand, all of the joints are represented in FIG. 3 as the electric motors by which they are driven.)

The twelve joints are: joints 10R, 10L (R and L indicating the right and left sides) each for swiveling the corresponding leg around the gravity axis (z or vertical axis) of the hip, joints 12R, 12L each for rotation around the roll axis (x axis) of the hip, joints 14R, 14L each for rotation around the pitch axis (y axis) of the hip, joints 16R, 16L each for rotation around the pitch axis (y axis) of the knee, joints 18R, 18L each for rotation around the pitch axis (y axis) of the ankle, and joints 20R, 20L each for rotation around the roll axis (x axis) of the ankle. Feet (foot members) 22R, 22L are attached at the lower ends of the leg links 2.

Thus each leg link 2 comprises the hip (crotch) joints 10R(L), 12R(L) and 14R(L), knee joint 16R(L) and ankle joints 18R(L) and 20R(L). The hip and knee joints are connected by a thigh link 24R(L) and the knee and ankle joints by a shank (crus) link 26R(L). The leg links 2 are connected through the hip joints to the body 3, which is represented in FIG. 3 simply by a body link 28. The arm links 5 are connected to the body 3, as already mentioned.

The arm links 5 comprise joints 30R, 30L each for rotation around the pitch axis of the corresponding shoulder, joints 32R, 32L each for rotation around the roll axis of the shoulder, joints 34R, 34L each for swiveling of the arm around the gravity axis, joints 36R, 36L each for rotation around the pitch axis of the elbow, joints 38R, 38L each for swiveling of the wrist around the gravity axis, joints 40R, 40L each for rotation of the wrist around the pitch axis, and joints 42R, 42L each for rotation of the wrist around the roll axis. Hands (end effectors) 44R, 44L are attached to the distal ends of the wrists.

Thus each arm link 5 comprises the shoulder joints 30R(L), 32R(L) and 34R(L), and the wrist joints 38R(L), 40R(L) and 42R(L). The shoulder joint and the elbow joint are connected by an arm link 46R(L) and the elbow joint and the wrist joint are connected by a forearm link 48R(L).

Owing to the foregoing configuration, the leg links 2 of the right and left legs thus have twelve degrees of freedom in total, so that during locomotion the legs as a whole can be caused to execute the desired movements by driving the 6*2=12 joints to appropriate angles. (The symbol * indicates multiplication in this specification). The robot is thus capable of walking freely within three-dimensional space. Each arm link 5 has seven degrees of freedom. The robot I can therefore be operated to carry out desired jobs by driving these joints to appropriate angles.

As shown in FIG. 3, a force sensor 56 of conventional design is mounted on the feet 22R(L) below the ankle joint. Of the external forces acting on the robot, the force sensor 56 detects the three floor reaction force components Fx, Fy and Fz and the three moment components Mx, My and Mz acting on the robot in and around three mutually orthogonal axes from the surface of contact.

Further, a similar force sensor 58 is mounted between the wrist joint and the hand 44R(L). The force sensor 56 detects other forces acting on the robot, particularly the three object reaction force components Fx, Fy and Fz and the three moment components Mx, My and Mz acting on the robot in and around three mutually orthogonal axes from the work (object the robot is performing an operation on).

An inclination sensor 60 mounted on the body 3 detects inclination and angular velocity of the robot 1, more specifically the body 3 relative to the gravity axis. The outputs of the joint motors are geared down through reduction gears (not shown) and applied for moving the links 24R(L), 26R(L) etc. relative to one another. Each motor is provided with an encoder (not shown) for detecting the amount of motor rotation.

The control unit (designated by reference numeral 68) accommodated in the housing unit 6 as mentioned earlier has a microcomputer. The outputs of the force sensors 56 etc. are forwarded to the control unit 68. (For simplicity of illustration, only the outputs from the right side of the robot 1 are indicated in FIG. 3.)

Details of the control unit 68 configuration are shown in the block diagram of FIG. 4.

The control unit 68, as stated previously has a microcomputer. The outputs from the inclination sensor 60 etc. are converted into digital signals by an A/D converter 70 and the resulting digital values are sent via a bus 72 to a RAM (random access memory) 74. The outputs of encoders disposed adjacent to the respective motors are input to the RAM 74 through a counter 76.

The control unit 68 has an arithmetic unit (central processing unit) 80. Based on data stored in a ROM (read-only memory) 84 and the sensor outputs, the arithmetic unit 80 computes the manipulated variables (control inputs) needed for driving the joints. It outputs the computed control inputs to the motors for driving the joints through a D/A converter 86 and actuator drivers (amplifiers) 88 provided at the individual joints.

What characterizes the robot 1 of this embodiment is that the body 3 and the two leg links (movable legs) 2 are connected through a parallel linkage 7, so that the leg links 2 are movable relative to each other in the direction of the gravity axis (z axis).

More specifically, the body 3 is connected to upper and lower links of the parallel linkage 7 at first and second fulcrums (supporting points), the right and left leg links 2 are connected to upper and lower links, and an actuator for moving the leg links 2 relative to the gravity axis direction is provided at one or the other of the first and second fulcrums (supporting points).

Further, the body 3 and the upper and lower links are connected through a joint so that the body 3 can be rotated around the gravity axis (z axis) relative to the parallel linkage 7.

The structure of the parallel linkage 7 and associated members will now be explicitly explained with reference to FIG. 5 to FIG. 11.

FIG. 5 is a front view, partially in section, of the robot 1 of FIG. 1 giving a partially broken-away view of the parallel linkage 7. FIG. 6 is a front view of the parallel linkage 7 in FIG. 5. FIG. 7 is a sectional view taken along line VII—VII of FIG. 6. FIG. 8 is a side view, partially in section, of the robot of FIG. 5 showing the connection between the parallel linkage 7 illustrated in FIG. 7 and the body 3 in reverse orientation from that in FIG. 7. FIG. 9 is a sectional view taken along line IX—IX in FIG. 6. FIG. 10 is a side view, partially in section, of the robot of FIG. 5 showing the connection between the parallel linkage 7 and the body 3 in FIG. 9 in reverse orientation from that in FIG. 9. FIG. 11 is a sectional view taken along line XI—XI of FIG. 6, wherein the arrow indicates the direction of robot advance (x axis direction).

As illustrated, the parallel linkage 7 is composed of upper and lower links, i.e. an upper link 90 and a lower link 92 located at higher and lower positions on the gravity axis (z axis), and right and left links, i.e., a right link 94R and a left link 94L oriented parallel to the gravity axis (z axis) when the robot 1 stands upright.

The upper link 90 and the right and left links 94R, L are connected through rotation shafts 96R, L to be mutually rotatable around the roll axis (x axis). Similarly, the lower link 92 and the right and left links 94R, L are connected through rotation shafts 98R, 98L to be mutually rotatable around the roll axis (x axis).

A rotation shaft (first fulcrum or supporting point) 100 is provided at the center of the upper link 90 (more precisely at the center of the upper link portion between the rotation shafts 96R, L) and the upper link 90 is connected to the body link 28 to be rotatable around the roll axis (x axis). A joint (second fulcrum or supporting point) 102 is provided at the center of the lower link 92 (more precisely at the center of the lower link portion between the rotation shafts 98R, L) and the lower link 92 is connected to the body link 28 to be rotatable around the roll axis (x axis).

The joint 102 will be explained. As shown best in FIGS. 7 and 11, a motor (actuator) 104 is disposed at the joint with its shaft oriented parallel to the roll axis (x axis). The output of the motor 104 is input to a harmonic drive (trademark) reduction mechanism 106. The input of the harmonic drive reduction mechanism 106 is fixed to the body link 28 and the output thereof to the lower link 92, or vice versa.

The lower link 92 is connected to the thigh links 24 of the leg links 2. More specifically, as shown in FIG. 11, each thigh link 24 (not shown) is formed with an empty space in the vicinity of the connection point and the hip joint 10R(L) of the leg link 2 which is housed in this space to be rotatable around the gravity axis (z axis).

When the motor 104 is operated, its output, decreased in angular velocity (increased in torque) by the harmonic drive reduction mechanism 106, rotates the body link 28 (body 3) around the roll axis relative to the lower link 92 (and the leg links 2).

As can be seen in FIGS. 5 and 6, when the robot I stands upright (still), the rotation shafts 96R and 98R fall on the same line in the direction of the gravity axis. The same is true of the rotation shafts 96L, 98L, and also of the rotation shaft 100 and the joint 102 (more precisely, the axis 102 a thereof). Therefore, the motor 104 rotates the body link 28 (body 3) around the roll axis relative to the lower link 92 (and the leg links 2), thereby moving the leg links 2 relative to each other in the gravity axis direction.

This enables effective absorption and mitigation of footfall impact and expands the freedom of gait design. It therefore becomes possible to achieve rapid, energy-efficient locomotion in a stable attitude and, further, to realize free body movement.

Movement also occurs in the pitch axis direction because the right and left rotation shafts 98R, 98L rotate around the joint 102 through the lower link 92. The leg links 2 therefore cannot be moved precisely parallel to the gravity axis with the joint 102 at the center. The movement in the pitch axis direction is, however, negligible because only a slight amount of movement of the leg links in the gravity axis direction is sufficient for absorbing the footfall impact.

Locomotion in a stable attitude is possible, moreover, because the movement of the body link 28 (body 3) produced by the motor 104 is also parallel to the gravity axis. Further, as shown in FIG. 6, the inclination sensor 60 mounted on the body 3 is attached to the body link 28 above the parallel linkage 7. As it is therefore affected only by movement in the direction of the gravity axis, inappropriate control owing to faulty detection can be avoided.

A joint 110 is provided on the body link 28 in the vicinity of the mounting location of the inclination sensor 60. Specifically, as best shown in FIGS. 7 and 8, a motor 112 is installed in the body link 28 with its shaft oriented parallel to the gravity axis. The output of the motor 112 is input to a harmonic drive reduction mechanism 114. The input of the harmonic drive reduction mechanism 114 is fixed to the upper end 28*a* of the body link 28 and the output thereof to the lower end 28*b* of the body link 28, or vice versa.

When the motor 112 is operated, its output, decreased in angular velocity (increased in torque) by the harmonic drive reduction mechanism 114, rotates the upper end 28*a* of the body link 28 around the gravity axis relative to the bottom end 28*b* of the body link 28 (and the parallel linkage 7 and leg links 2). This enables still free body movements.

The operation of the robot I according to this embodiment will now be explained with reference to FIG. 12.

FIGS. 12A and 12B are side and front views schematically illustrating how the robot 1 moves during walking.

As explained earlier, the rotation shaft 100, rotation shaft 96R and rotation shaft 96L are respectively located at positions spaced from the rotation shaft 102, rotation shaft 98R (not shown in the figures) and rotation shaft 98L by equal distances. The rotation shaft 100, rotation shaft 96R and rotation shaft 96L connected by the upper link 90 therefore lie parallel to the lower link 92. Owing to this parallel linkage, the right and left leg links 2 can be moved relative to each other substantially parallel to the gravity axis (z axis) with the joint 102 at the center.

By way of example, FIG. 12A shows the right leg link 2R touching down. At this time, a floor reaction force (footfall impact) acts on the robot 1 via the right leg link 2R. In this embodiment, the motor 104 (not shown) disposed at the joint 102 is operated during this footfall so as to cause the parallel linkage 7 to move the right leg link 2R parallel (substantially

parallel) to the left leg link 2L in the direction of the gravity axis, as indicated by the arrow.

More specifically, the motor **104** is operated during footfall to rotate the lower link **92** around the joint **102** to move the alighting leg (right leg link 2R) in the direction of the gravity axis. Since the leg links **2** are connected to the upper link **90**, the right leg link 2R making floor contact is moved in the direction of the gravity axis.

In other words, the alighting leg 2R is moved substantially parallel to the supporting leg in contact with the floor (left leg link 2L) by an amount proportional to the output of the motor and in the direction enabling absorption of the large floor reaction force at impact. The floor reaction force can therefore be absorbed in proportion to the amount of movement of the parallel linkage **7**, i.e., the amount of movement of the free leg, so that the impact at footfall can be absorbed and mitigated.

Since the parallel linkage **7** ensures that the body **3** does not tilt relative to the gravity axis, the absorption and mitigation of the footfall impact can be achieved while keeping the posture of the robot **1** stable. Any sensor mounted on the body **3** is therefore safe from producing false detection signals and control can therefore be effected without error.

The described configuration expands the degree of freedom in gait design, enables energy-efficient locomotion, and by permitting free body movements, makes it possible for the robot to work in, for example, a kneeling attitude.

The footfall impact acting on the robot **1** of this embodiment will now be explained with reference to FIG. **13**.

The broken characteristic curve in FIG. **13** was drawn by plotting actually observed data representing the footfall impact (floor reaction force) acting on the robot taught in the assignee's earlier Japanese Laid-open Patent Application No. 11(1999)-33941. The robot used in the test weighed 130 kg. The curve shows that an impact force (floor reaction force) occurred at the instant the free leg touched down, momentarily fell to zero owing to rebound (in the direction of the gravity axis), and then reached approximately 300 kgf when the free leg thereafter collided with the floor.

The solid curve shows the footfall impact pattern of the robot **1** of the aforesaid embodiment. It is a nearly ideal pattern in which the footfall impact (floor reaction force) of approximately 200 kgf at footfall gradually diminished with passage of time. The robot **1** of the embodiment is able to achieve these nearly ideal characteristics because, as explained in the foregoing, the body **3** and the leg links **2** are interconnected via the parallel linkage **7**.

Having been configured in the foregoing manner, the embodiment is configured to provide a biped mobile robot **(1)** having at least a body **(3)** and two leg links **(2)** connected to the body; characterized in that a parallel linkage **(7)** is provided between the body and the two leg links to connect the body to the two leg links such that each of the two leg links are movable relative to the body in a direction of gravity axis (i.e. z-axis).

The biped mobile robot according to the embodiment of the invention can effectively absorb and mitigate footfall impact (floor reaction force), offers a high degree of freedom in gait design, thereby enabling rapid, energy-efficient locomotion in a stable attitude, and permits free body movement.

Moreover, the ability of the robot to maintain a stable attitude during locomotion makes any sensor such as a gyroscope or G sensor mounted on the body safe from producing false detection signals so that inappropriate control can be avoided.

In the biped mobile robot, the parallel linkage is composed of upper and lower links **(90, 92)** located at higher and lower positions on the gravity axis, and right and left links **(94R, 94L)** each connected to the upper and lower links and each oriented parallel to the gravity axis when the robot stands upright, and wherein the body **(3)** is connected to the upper and lower links through a first fulcrum **(100)** and a second fulcrum **(102)**, while the two leg links **(2)** are each connected to the right and left links **(94R, 94L)**.

In the biped mobile robot, an actuator **(104)** is provided at one of the first fulcrum **(100)** and the second fulcrum **(102)** to move each of the two leg links **(2)** relative to the body **(3)** in the direction of the gravity axis.

In the biped mobile robot, the body **(3)** is connected to the parallel linkage **(7)** through a joint **(10)** such that the body is movable relative to the two leg links around the gravity axis.

In addition to providing the same features and achieving the same effects as the biped mobile robot according to the aspects mentioned above, the biped mobile robot according to this aspect of the invention can further achieve a high degree of freedom of body movement.

In the biped mobile robot, the first fulcrum **(100)** and the second fulcrum **(102)** fall on a same line in the direction of the gravity axis when the robot **(1)** stands upright.

In the biped mobile robot, the right and left links **(94R, 94L)** are connected to the upper link **(90)** through a first group of rotation shafts **(96R, 96L)** and to the lower link **(92)** through a second group of rotation shafts **(98R, 98L)**, and wherein the first fulcrum **(100)** is located at a position spaced apart by an equal distance from the first group of rotation shafts **(96R, 96L)** and the second fulcrum **(102)** is located at a position spaced apart by an equal distance from the second group of rotation shafts **(98R, 98L)**.

In the biped mobile robot, one (e.g. **94R**) of the first group of rotation shafts **(94R, 94L)** and one **(98L)** of the second group of rotation shafts **(98R, 98L)** fall on a same line in the direction of the gravity axis, while another (e.g. **94L**) of the first group of rotation shafts **(94R, 94L)** and another **(98L)** of the second group of rotation shafts **(98R, 98L)** fall on the same line in the direction of the gravity axis, when the robot **(1)** stands upright.

In the biped mobile robot, the first fulcrum is a rotation shaft **(100)** and the second fulcrum is a joint **(102)**.

The biped mobile robot further includes an inclination sensor **(60)** for detecting inclination of the robot **(1)** relative to the gravity axis, and wherein the inclination sensor **(60)** is mounted on the body **(3)** above the parallel linkage **(7)**.

It should be noted that, although a parallel linkage is utilized in the described embodiment, the invention is not limited to this structure. For instance, there can instead be adopted a rack-and-pinion mechanism in which the two movable leg members are connected to two racks and the body link is connected to a pinion gear located midway therebetween.

It should also be noted that the explanation regarding a biped mobile robot set out in the foregoing also applies with necessary modifications to legged mobile robots of other than biped locomotion type.

While the invention has thus been shown and described with reference to specific embodiments, it should be noted that the invention is in no way limited to the details of the described arrangements but changes and modifications may be made without departing from the scope of the appended claims.

What is claimed is:

1. A two-legged mobile robot having at least a body and two leg links connected to the body;

wherein

the improvement comprises:

a parallel linkage is provided between the body and the two leg links to connect the body to the two leg links such that each of the two leg links is movable relative to the body in a direction of gravity axis,

wherein the parallel linkage is composed of upper and lower links located at higher and lower positions on the gravity axis, and right and left links each connected to the upper and lower links and each oriented parallel to the gravity axis when the robot stands upright,

and wherein the body is connected to the upper and lower links through a first fulcrum and a second fulcrum, while the two leg links are each connected to the right and left links,

wherein the first fulcrum and the second fulcrum are aligned in the direction of the gravity axis when the robot stands upright, and

wherein the right and left links are connected to the upper link through a first group of rotation shafts and to go to the lower link through a second group of rotation shafts,

and wherein the first fulcrum is located at a position spaced apart by an equal distance from the first group of rotation shafts and the second fulcrum is located at a position spaced apart by an equal distance from the second group of rotation shafts.

2. A two-legged mobile robot according to claim 1, wherein an actuator is provided at one of the first fulcrum and the second fulcrum to move each of the two leg links relative to the body in the direction of the gravity axis.

3. A two-legged mobile robot according to claim 1, wherein the body is connected to the parallel linkage through a joint such that the body is movable relative to the two leg links around the gravity axis.

4. A two-legged mobile robot according to claim 1, wherein the body is connected to the parallel linkage through a joint such that the body is movable relative to the two leg links around the gravity axis.

5. A two-legged mobile robot according to claim 2, wherein the body is connected to the parallel linkage through a joint such that the body is movable relative to the two leg links around the gravity axis.

6. A two-legged mobile robot according to claim 1, wherein the first fulcrum is a rotation shaft and the second fulcrum is a joint.

7. A two-legged mobile robot according to claim 1, further including:

an inclination sensor for detecting inclination of the robot relative to the gravity axis,

and wherein the inclination sensor is mounted on the body above the parallel linkage.

8. A two-legged mobile robot according to claim 1, wherein one of the first group of rotation shafts and one of the second group of rotation shafts are aligned in the direction of the gravity axis, while another of the first group of rotation shafts and another of the second group of rotation shafts are aligned in the direction of the gravity axis, when the robot stands upright.

9. A two-legged mobile robot having at least a body and two leg links connected to the body;

wherein the improvement comprises:

the parallel linkage provided between the body and the two leg links to connect the body to the two leg links such that each of the two leg links is movable relative to the body in a direction of a gravity axis,

wherein the parallel linkage includes upper and lower links located at higher and lower positions relative to the gravity axis and right and left links each connected to the upper and lower links,

and wherein the body is connected to the upper and lower links through a first fulcrum and a second fulcrum, while the two leg links are each connected to the right and left links,

wherein the first fulcrum and the second fulcrum are aligned in the direction of the gravity axis when the robot stands upright, and

wherein the right and left links are connected to the upper link through a first group of rotation shafts and to the lower link through a second group of rotation shafts,

and wherein the first fulcrum is located at a position spaced apart by an equal distance from the first group of rotation shafts and the second fulcrum is located at a position spaced apart by an equal distance from the second group of rotation shafts.

10. A two-legged mobile robot according to claim 9, wherein the right and left links are each oriented parallel relative to the gravity axis when the robot stands upright.

11. A two-legged mobile robot according to claim 9, wherein an actuator is provided at one of the first fulcrum and the second fulcrum to move each of the two leg links relative to the body in a direction of the gravity axis.

12. A two-legged mobile robot according to claim 9, wherein the body is connected to the parallel linkage through a joint such that the body is movable relative to the two leg links around the gravity axis.

13. A two-legged mobile robot according to claim 9, wherein the first fulcrum is a rotation shaft and the second fulcrum is a joint.

14. A two-legged mobile robot according to claim 9, further including:

an inclination sensor for detecting inclination of the robot relative to the gravity axis,

and wherein the inclination sensor is mounted on the body above the parallel linkage.

15. A two-legged mobile robot having at least a body and two leg links connected to the body;

wherein the improvement comprises:

a linkage provided between the body and the two leg links to connect the body to the two leg links such that each of the two leg links is movable relative to the body in a direction of a gravity axis,

wherein the linkage includes upper and lower links located at higher and lower positions relative to the

gravity axis and right and left links each connected to the upper and lower links,

and wherein the body is connected to the upper and lower links through a first fulcrum and a second fulcrum, while the two leg links are each connected to the right and left links,

wherein the first fulcrum and the second fulcrum are aligned in the direction of the gravity axis when the robot stands upright, and

wherein the right and left links are connected to the upper link through a first group of rotation shafts and to the lower link through a second group of rotation shafts,

and wherein the first fulcrum is located at a position spaced apart by an equal distance from the first group of rotation shafts and the second fulcrum is located at a position spaced apart by an equal distance from the second group of rotation shafts.

16. A two-legged mobile robot according to claim **15**, wherein the linkage is a parallel linkage and the right and left links are each oriented parallel relative to the gravity axis when the robot stands upright.

17. A two-legged mobile robot according to claim **16**, wherein an actuator is provided at one of the first fulcrum and the second fulcrum to move each of the two leg links relative to the body in the direction of the gravity axis.

18. A two-legged mobile robot according to claim **16**, wherein the body is connected to the parallel linkage through a joint such that the body is movable relative to the two leg links around the gravity axis.

19. A two-legged mobile robot according to claim **15**, wherein the first fulcrum is a rotation shaft and the second fulcrum is a joint.

20. A two-legged mobile robot according to claim **15**, further including:

an inclination sensor for detecting inclination of the robot relative to the gravity axis,

and wherein the inclination sensor is mounted on the body above the linkage.

21. A two-legged mobile robot according to claim **15**, wherein the upper and lower links are each oriented oblique relative to the gravity axis when the robot is walking.

22. A two-legged mobile robot according to claim **21**, wherein a actuator is provided at one of the first fulcrum and the second fulcrum to move each of the two leg links relative to the body in the direction of the gravity axis.

23. A two-legged mobile robot according to claim **21**, wherein the body is connected to the linkage through a joint such that the body is movable relative to the two legged links around the gravity axis.

24. A two-legged mobile robot according to claim **21**, wherein the first fulcrum is a rotation shaft and second fulcrum is a joint.

25. A two-legged mobile robot according to claim **21**, further including:

an inclination sensor for detecting inclination of the robot relative to the gravity axis,

and wherein the inclination sensor is mounted on the body above the linkage.

* * * * *

US 20090008887A1

(19) United States

(12) Patent Application Publication

Buma

(10) Pub. No.: US 2009/0008887 A1

(43) Pub. Date: Jan. 8, 2009

(54) VEHICLE STABILIZER SYSTEM

(75) Inventor: Shuuichi Buma, Aichi-ken (JP)

Correspondence Address:
OBLON, SPIVAK, MCCLELLAND MAIER & NEUSTADT, P.C.
1940 DUKE STREET
ALEXANDRIA, VA 22314 (US)

(73) Assignee: TOYOTA JIDOSHA KABUSHIKI KAISHA, Toyota-shi (JP)

(21) Appl. No.: 12/278,980

(22) PCT Filed: Feb. 2, 2007

(86) PCT No.: PCT/JP2007/052311

§ 371 (c)(1), (2), (4) Date: Aug. 11, 2008

(30) Foreign Application Priority Data

Feb. 9, 2006 (JP) 2006-032591

Publication Classification

(51) Int. Cl.
B60G 21/055 (2006.01)

(52) U.S. Cl. 280/5.511

(57) ABSTRACT

A stabilizer system for a vehicle, including: (a) a stabilizer bar (28) including (a-1) a torsion bar portion (90), and (a-2) an arm portion (92) that extends from the torsion bar portion toward a wheel (12) of the vehicle; and (b) an actuator (32) including (b-1) a motor (40), and (b-2) a speed reducer (42) that reduces a speed of the motor while transmitting a force of the motor to the torsion bar portion of the stabilizer bar. The stabilizer bar generates a stabilizing force which is dependent on a reaction generated as a result of torsion of the torsion bar portion, and which forces the wheel and the vehicle body in a direction toward each other or a direction away from each other The actuator allows the stabilizer bar to generate the stabilizing force whose magnitude is dependent on a magnitude of the motor force and is changeable depending on an amount of rotation of the torsion bar portion. The actuator includes an actuator-efficiency changing mechanism changing a negative efficiency of the actuator, depending on a direction of the force of the motor.

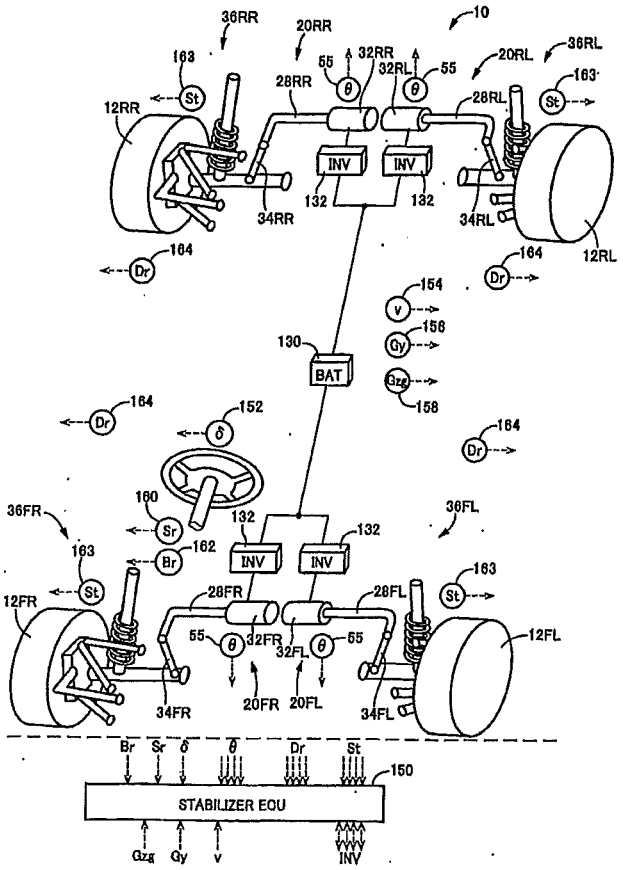

FIG.1

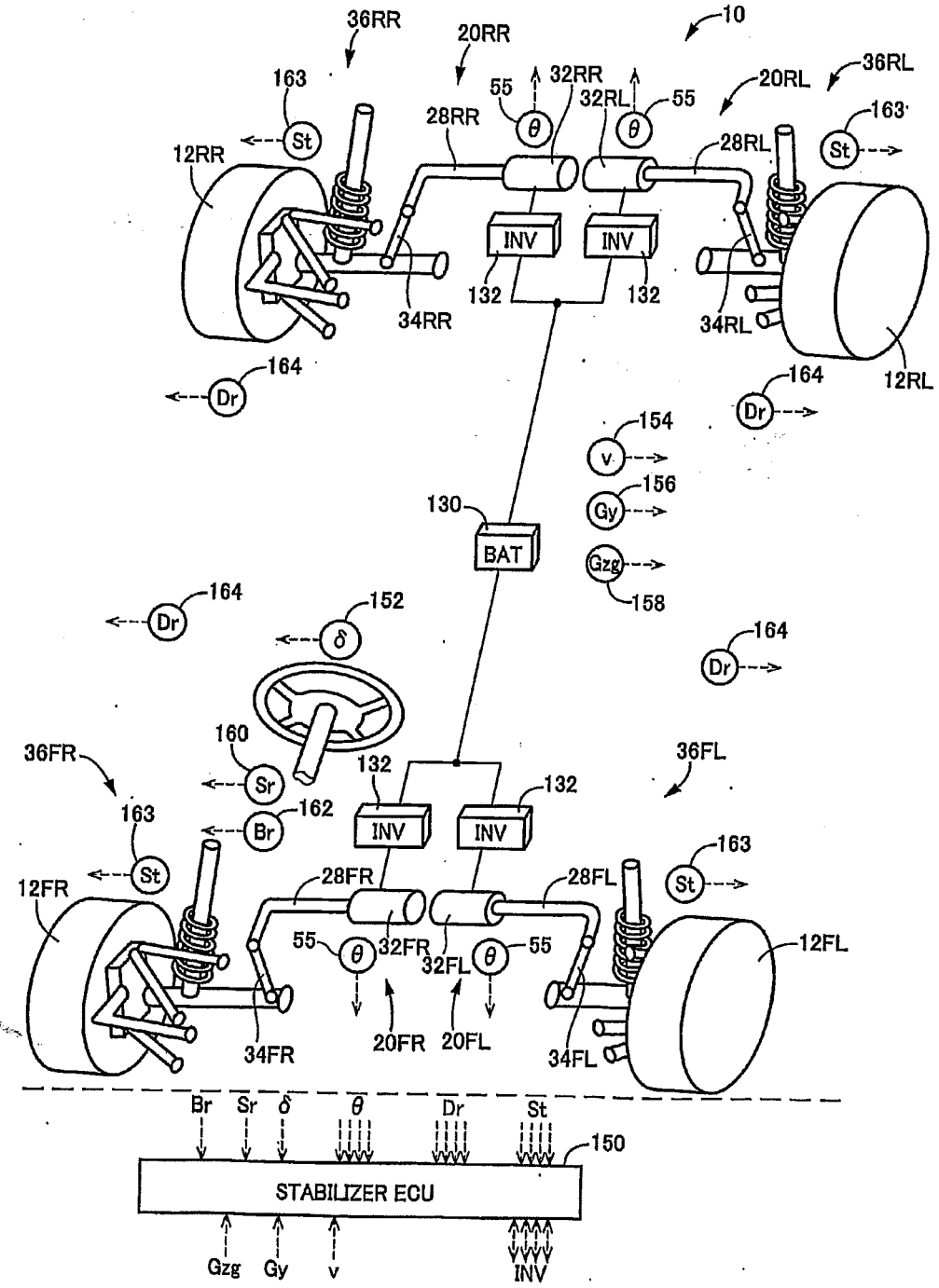
10
36RR
20RR
36RL
20RL
163
163'
55
32RR
32RL
28RR
28RL
12RR
12RL
St
θ
INV
132
34RR
34RL
164
Dr
154
v
156
Gy
Gzg
158
130
BAT
152
δ
160
Sr
162
Br
36FR
36FL
12FR
12FL
28FR
28FL
32FR
32FL
20FR
20FL
34FR
34FL
150
STABILIZER ECU
Gzg
Gy
v
INV

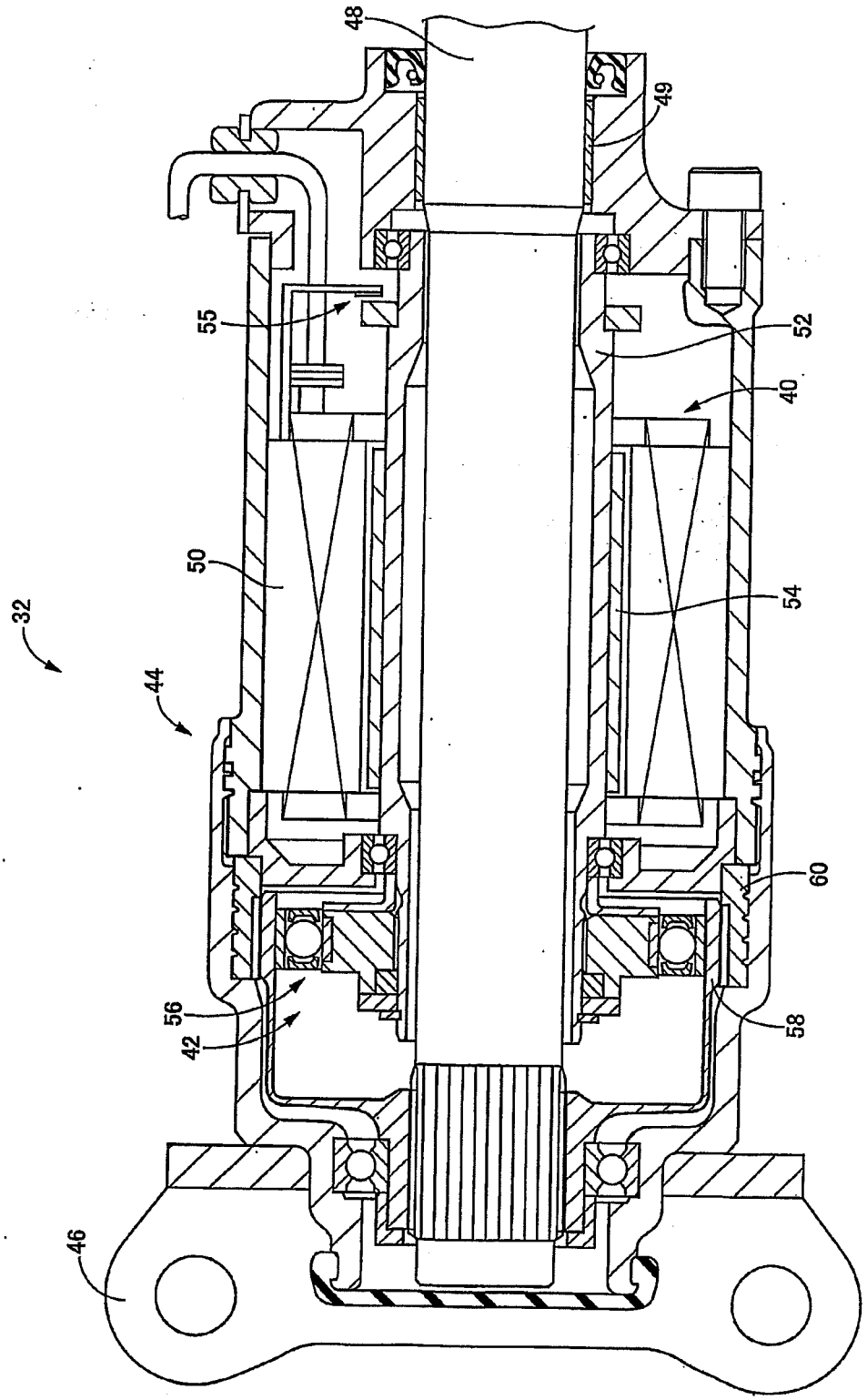

FIG.2

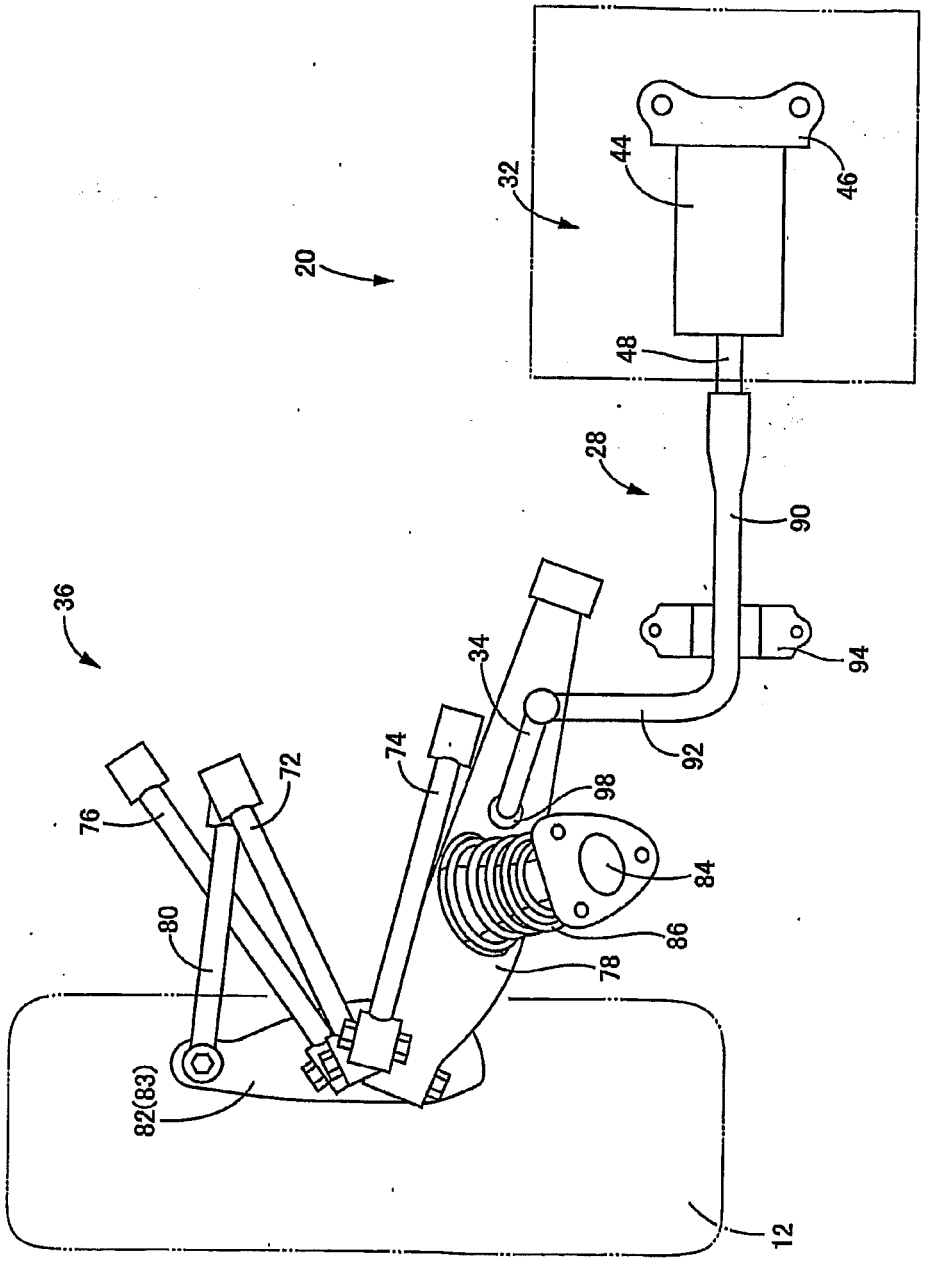

FIG.3

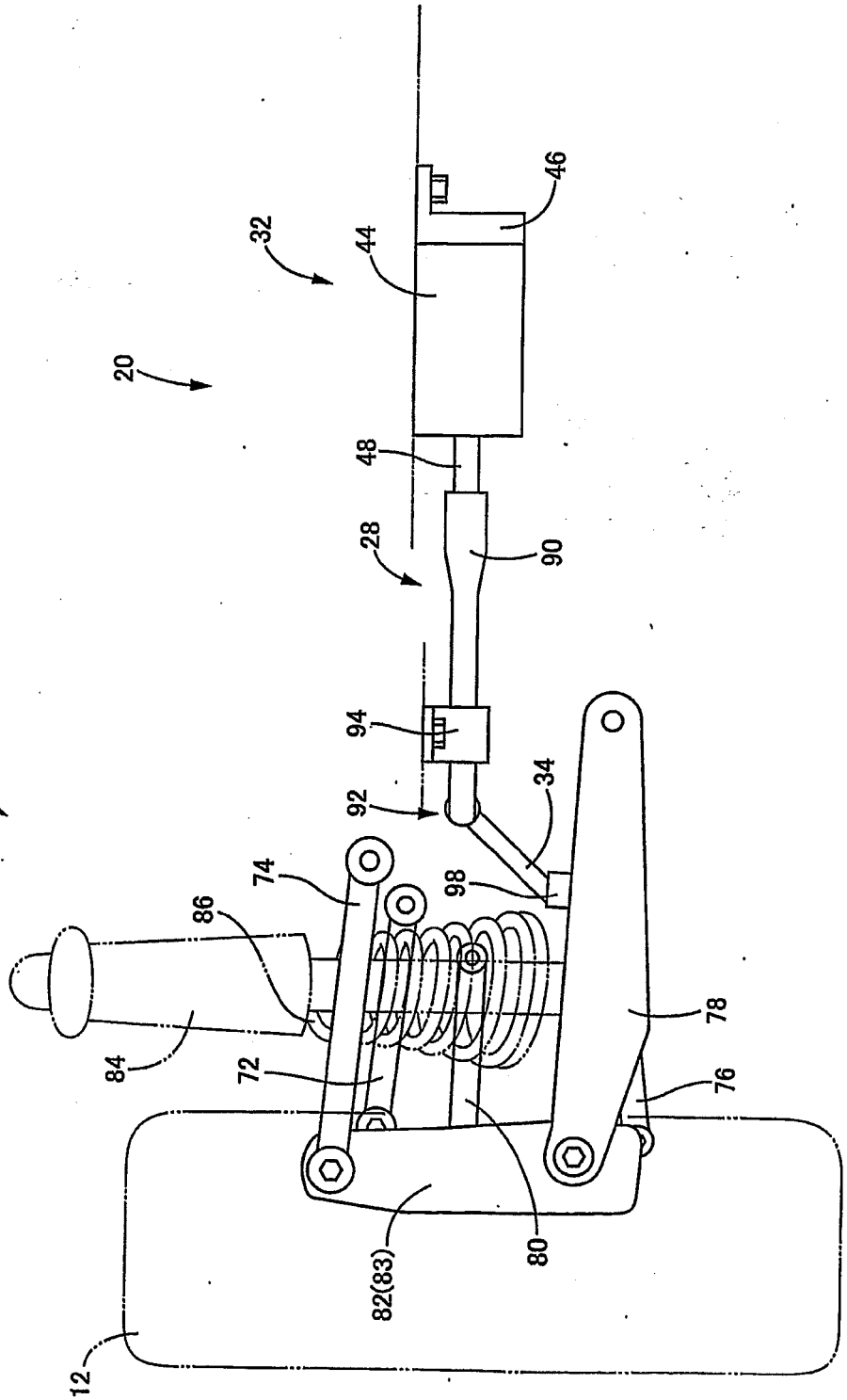

FIG.4

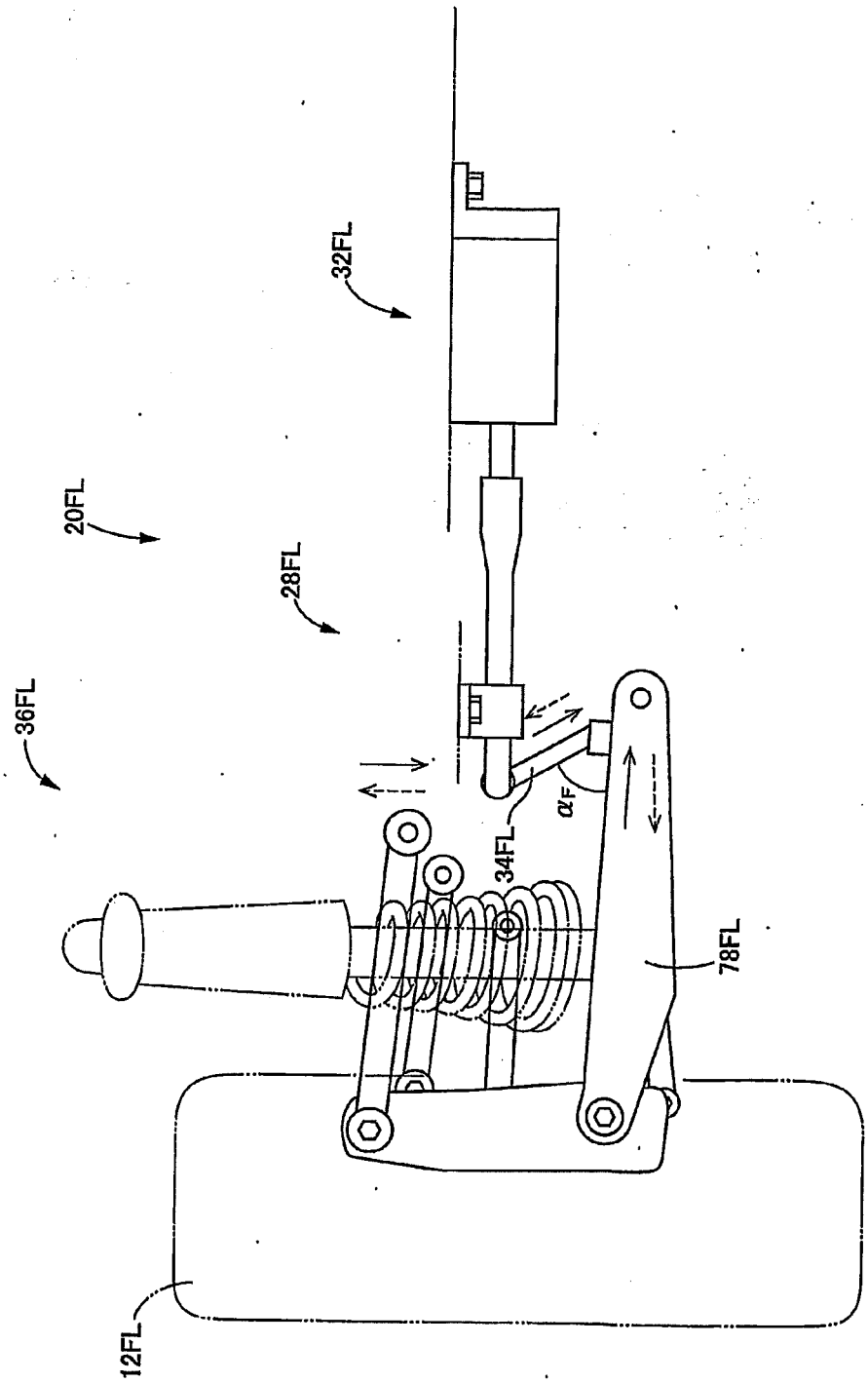

FIG.5

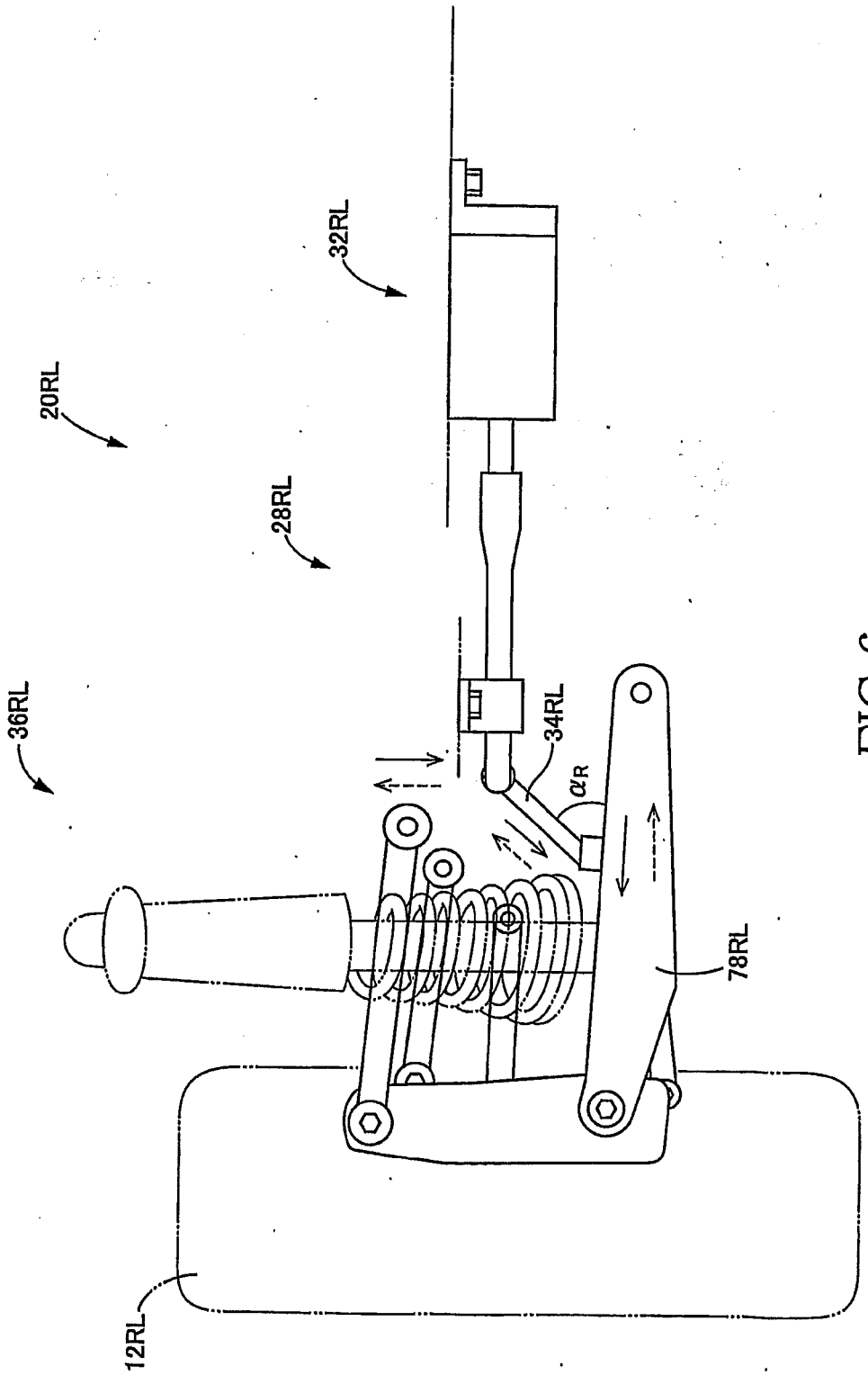

FIG.6

FIG.7

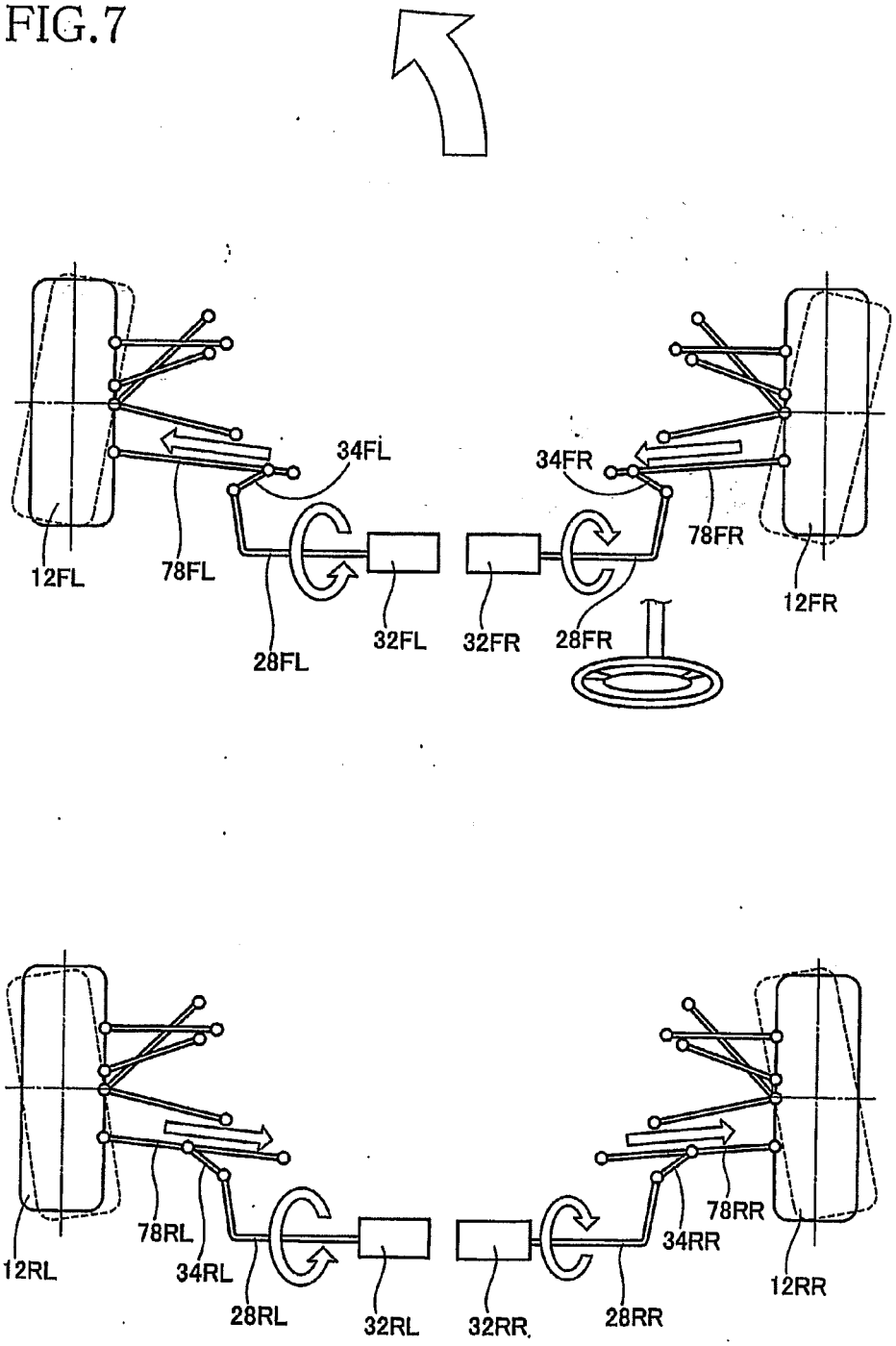
34FL
34FR
12FL
78FL
28FL
32FL
32FR
28FR
78FR
12FR
12RL
78RL
34RL
28RL
32RL
32RR
28RR
34RR
78RR
12RR

FIG.8A

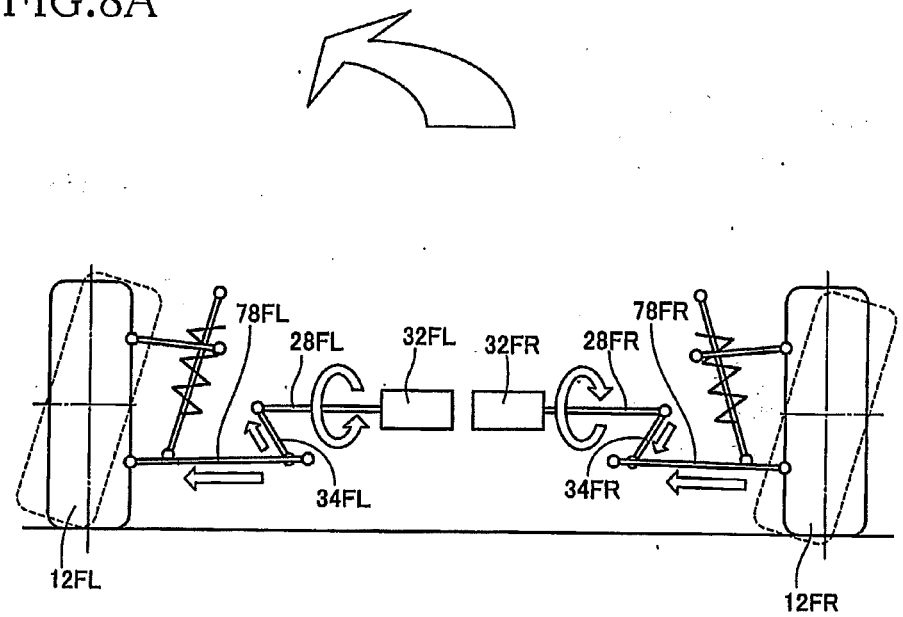
78FL
28FL
32FL
32FR
28FR
78FR
34FL
34FR
12FL
12FR

FIG.8B

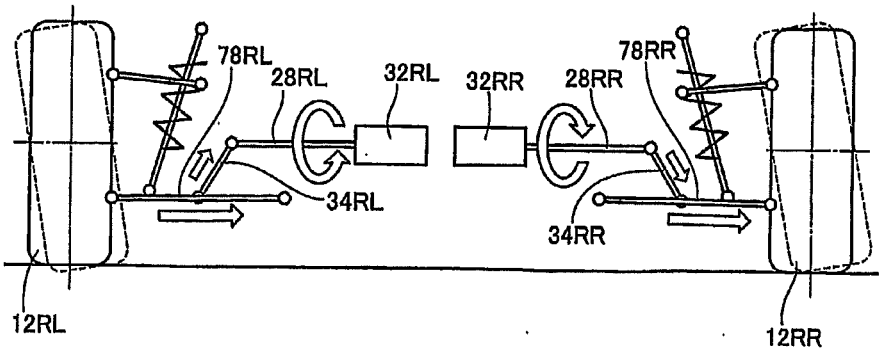
78RL
28RL
32RL
32RR
28RR
78RR
34RL
34RR
12RL
12RR

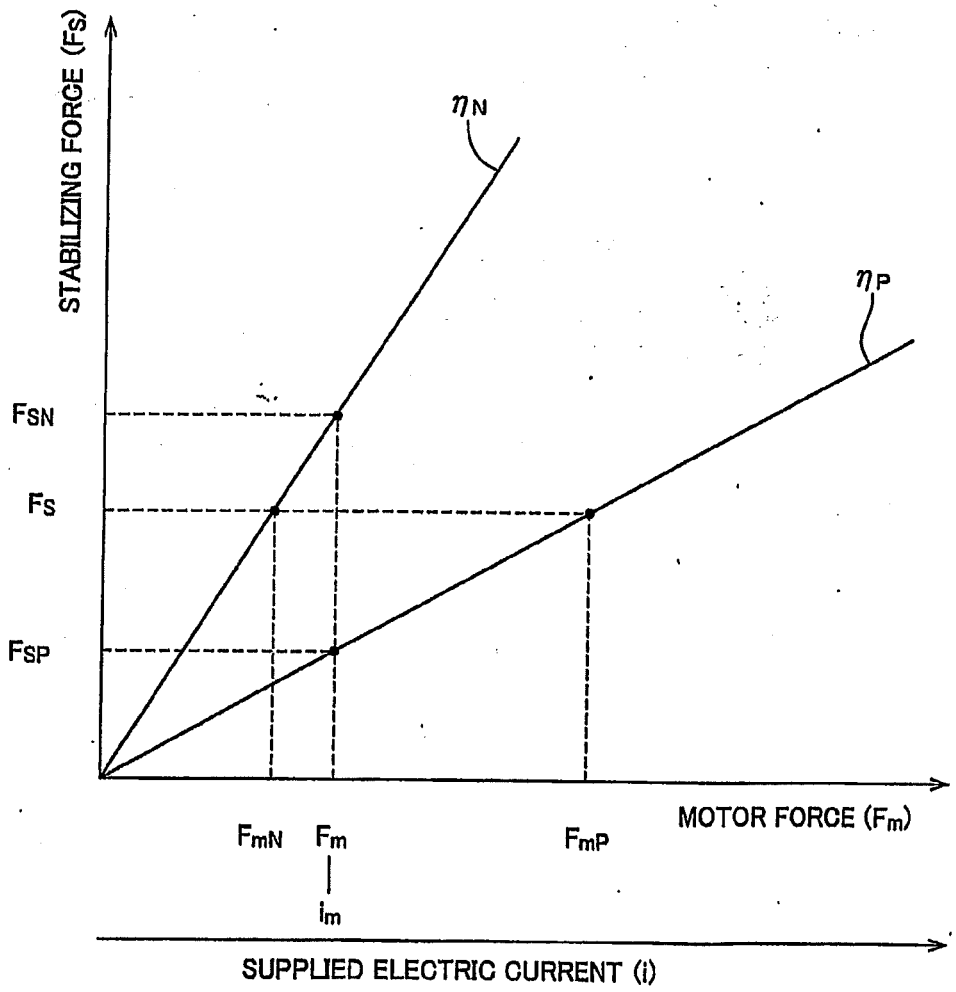
STABILIZING FORCE (Fs)
ηN
ηP
FSN
FS
FSP
FmN
Fm
im
FmP
MOTOR FORCE (Fm)
SUPPLIED ELECTRIC CURRENT (i)

FIG.9

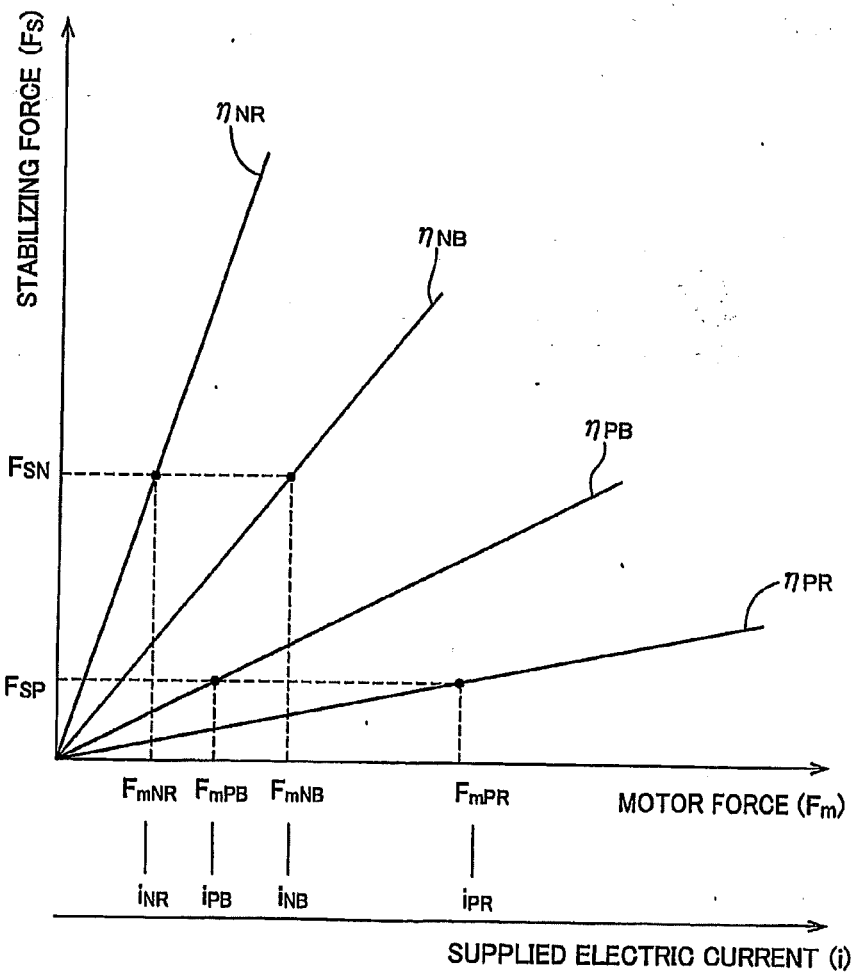
STABILIZING FORCE (Fs)
ηNR
ηNB
ηPB
ηPR
FSN
FSP
FmNR
FmPB
FmNB
FmPR
MOTOR FORCE (Fm)
iNR
iPB
iNB
iPR
SUPPLIED ELECTRIC CURRENT (i)

FIG.10

FIG.11A

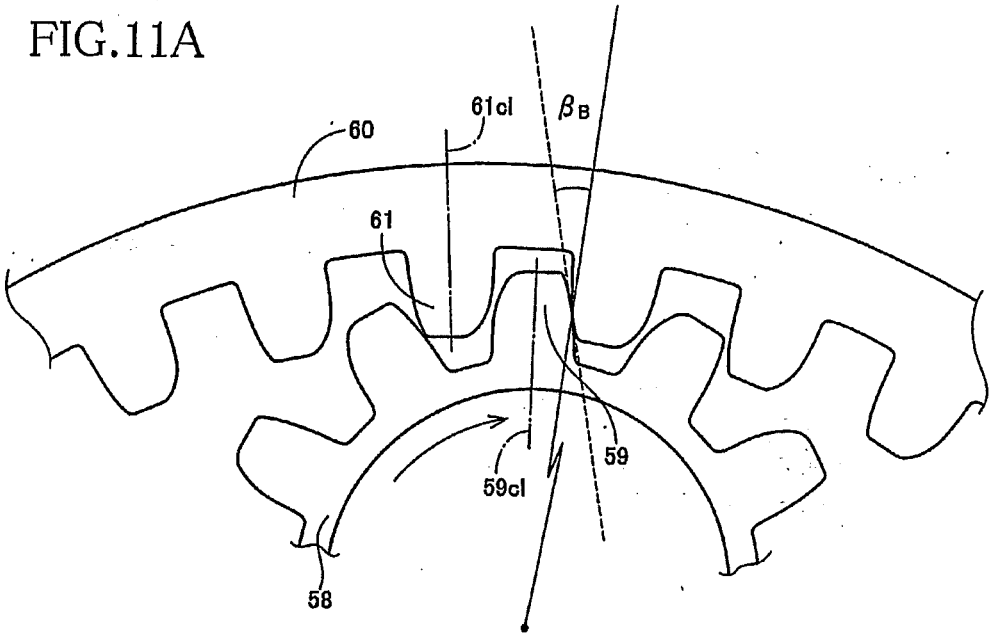

FIG.11B

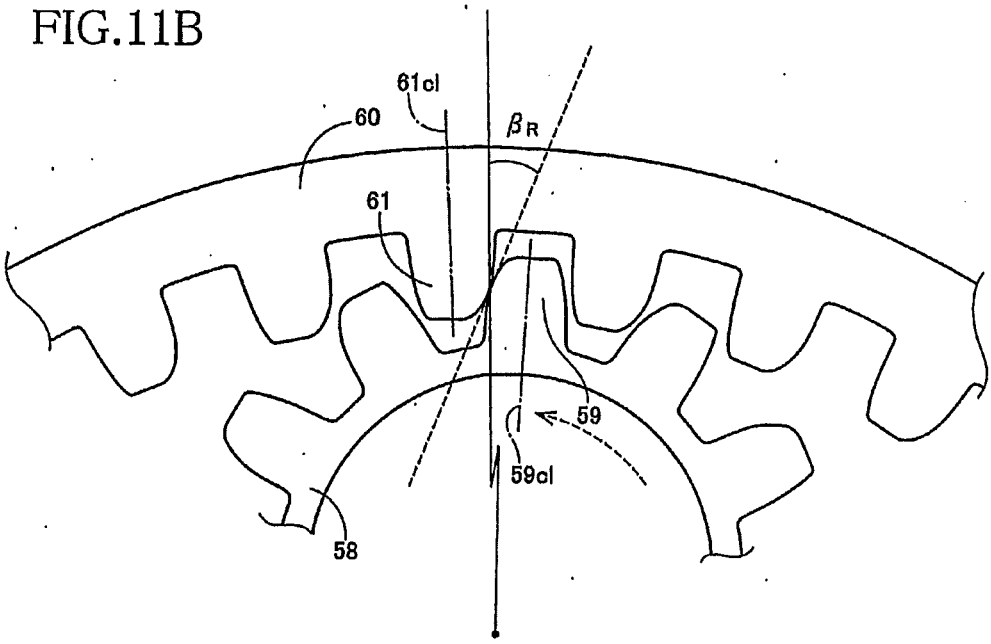

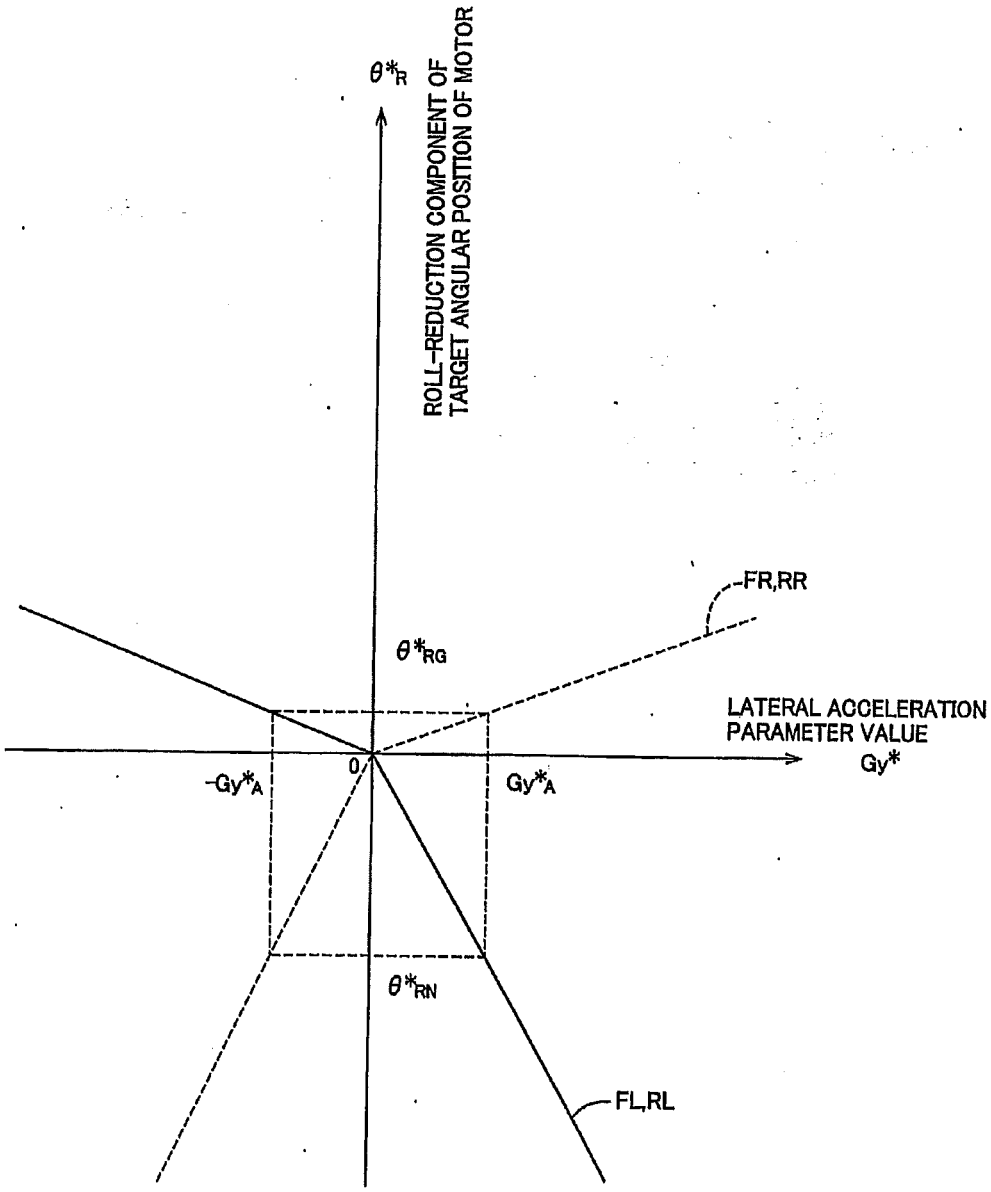
θ*R
ROLL-REDUCTION COMPONENT OF TARGET ANGULAR POSITION OF MOTOR
FR,RR
θ*RG
LATERAL ACCELERATION PARAMETER VALUE
Gy*
-Gy*A
0
Gy*A
θ*RN
FL,RL

FIG.12

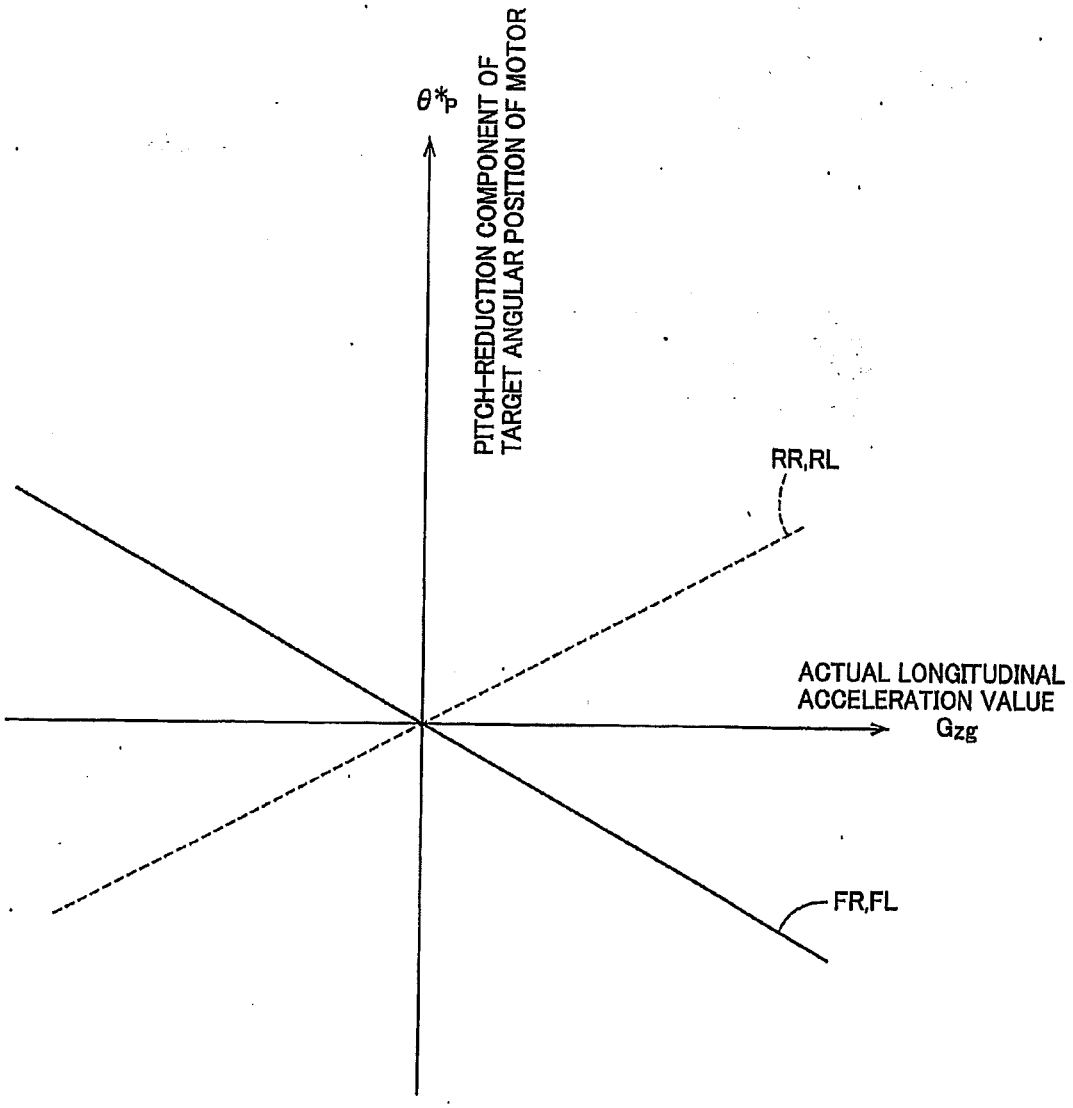
θ*p
PITCH-REDUCTION COMPONENT OF TARGET ANGULAR POSITION OF MOTOR
RR,RL
ACTUAL LONGITUDINAL ACCELERATION VALUE
Gzg
FR,FL

FIG.13

FIG.14

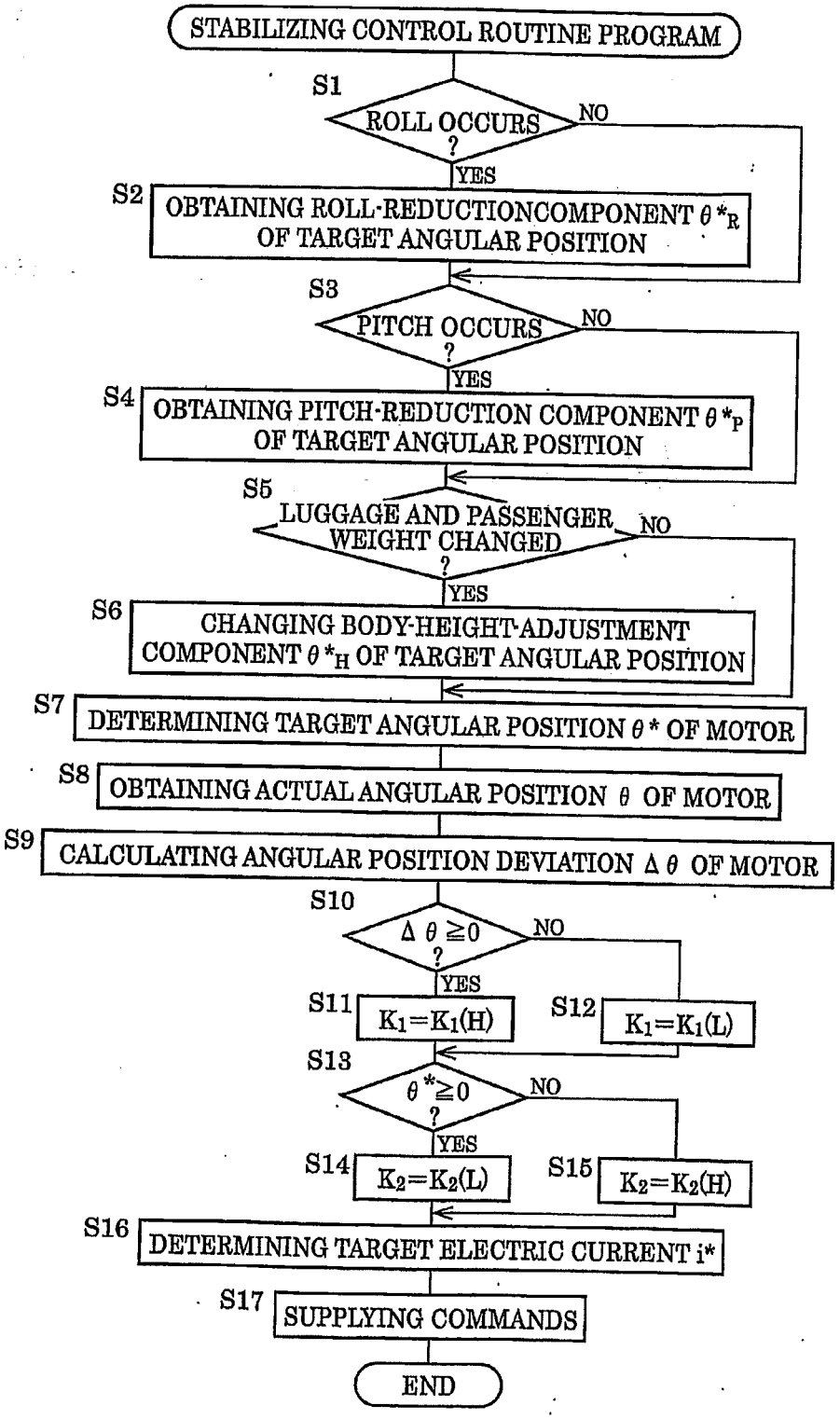
STABILIZING CONTROL ROUTINE PROGRAM
S1
ROLL OCCURS ?
NO
YES
S2
OBTAINING ROLL-REDUCTIONCOMPONENT θ*R OF TARGET ANGULAR POSITION
S3
PITCH OCCURS ?
NO
YES
S4
OBTAINING PITCH-REDUCTION COMPONENT θ*P OF TARGET ANGULAR POSITION
S5
LUGGAGE AND PASSENGER WEIGHT CHANGED ?
NO
YES
S6
CHANGING BODY-HEIGHT-ADJUSTMENT COMPONENT θ*H OF TARGET ANGULAR POSITION
S7
DETERMINING TARGET ANGULAR POSITION θ* OF MOTOR
S8
OBTAINING ACTUAL ANGULAR POSITION θ OF MOTOR
S9
CALCULATING ANGULAR POSITION DEVIATION Δθ OF MOTOR
S10
Δθ≧0 ?
NO
YES
S11
K1=K1(H)
S12
K1=K1(L)
S13
θ*≧0 ?
NO
YES
S14
K2=K2(L)
S15
K2=K2(H)
S16
DETERMINING TARGET ELECTRIC CURRENT i*
S17
SUPPLYING COMMANDS
END

FIG.15

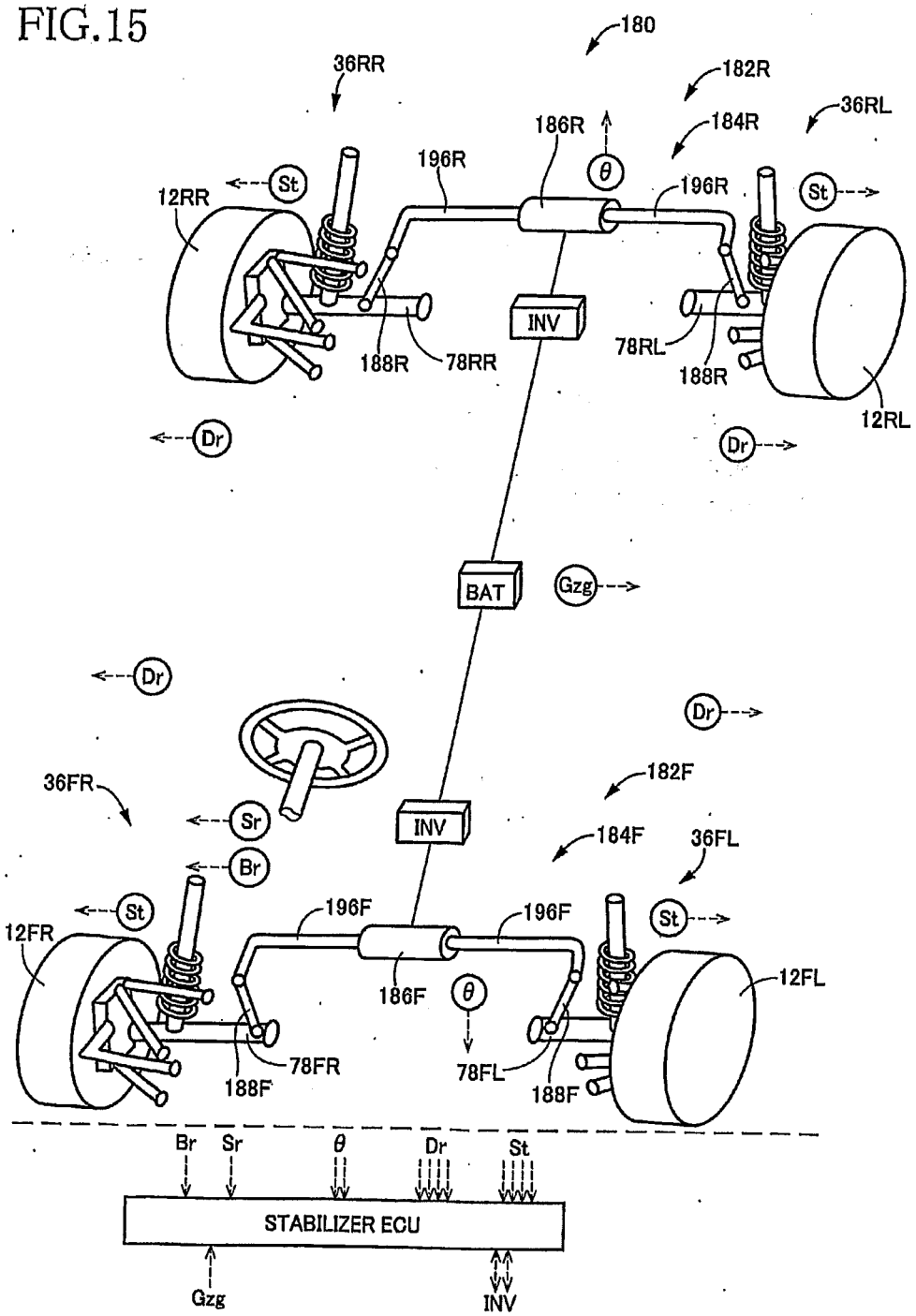
180
36RR
182R
36RL
186R
184R
196R
θ
196R
St
12RR
St
INV
78RL
188R
78RR
188R
12RL
Dr
Dr
BAT
Gzg
Dr
Dr
182F
36FR
Sr
INV
184F
36FL
Br
St
196F
196F
St
12FR
12FL
186F
θ
78FR
78FL
188F
188F
Br
Sr
θ
Dr
St
STABILIZER ECU
Gzg
INV

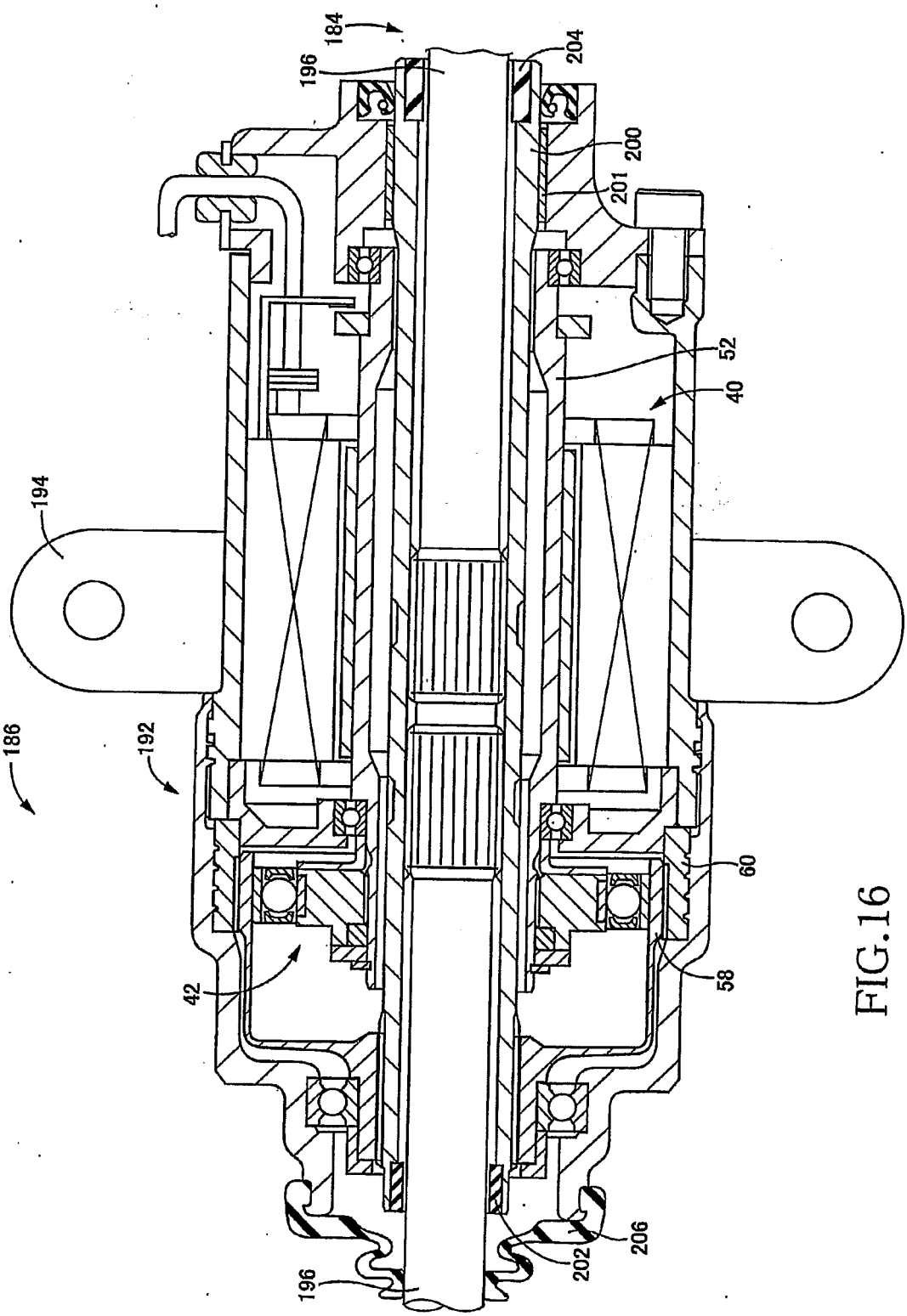

FIG.16

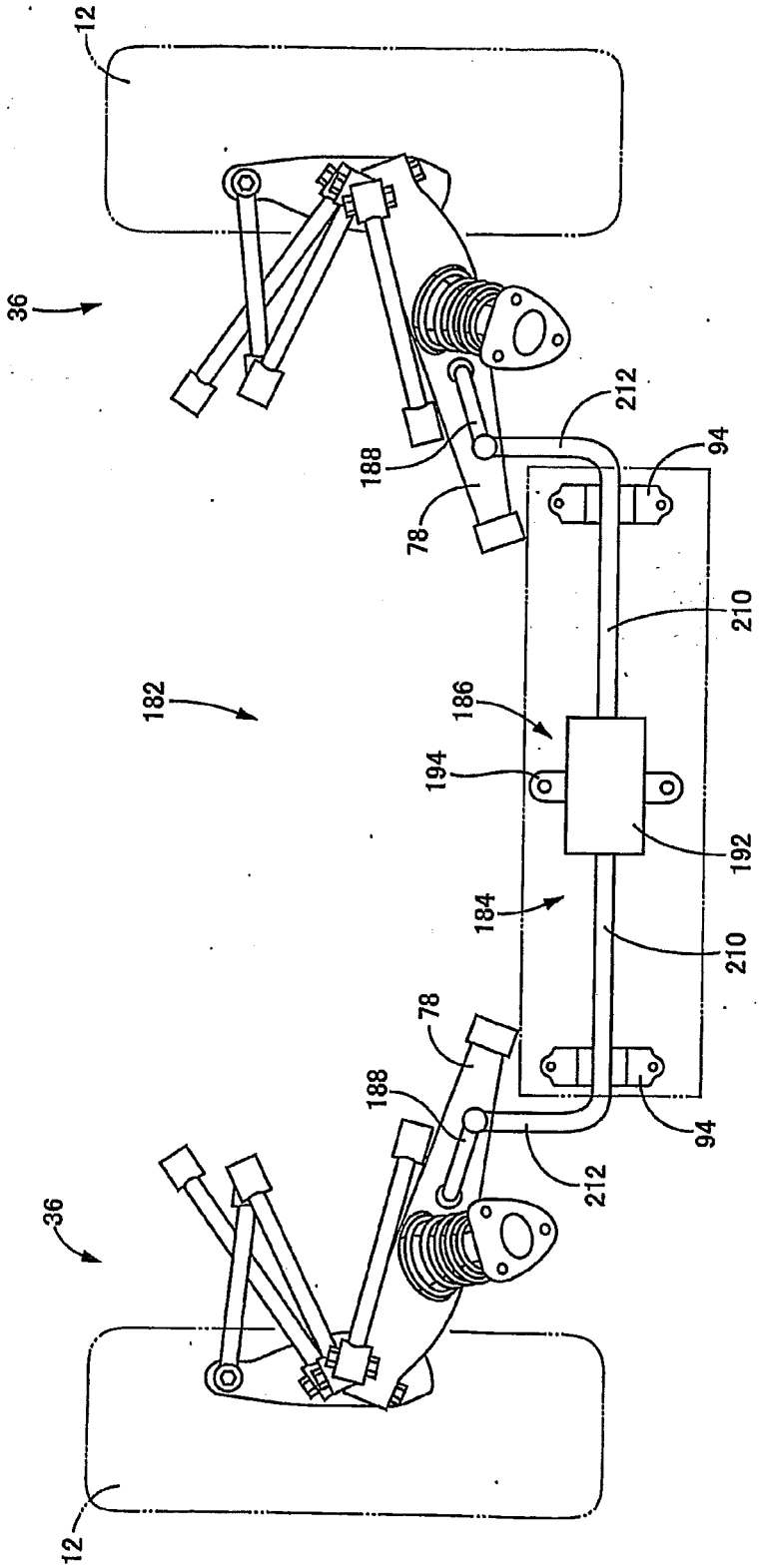

FIG. 17

FIG.18

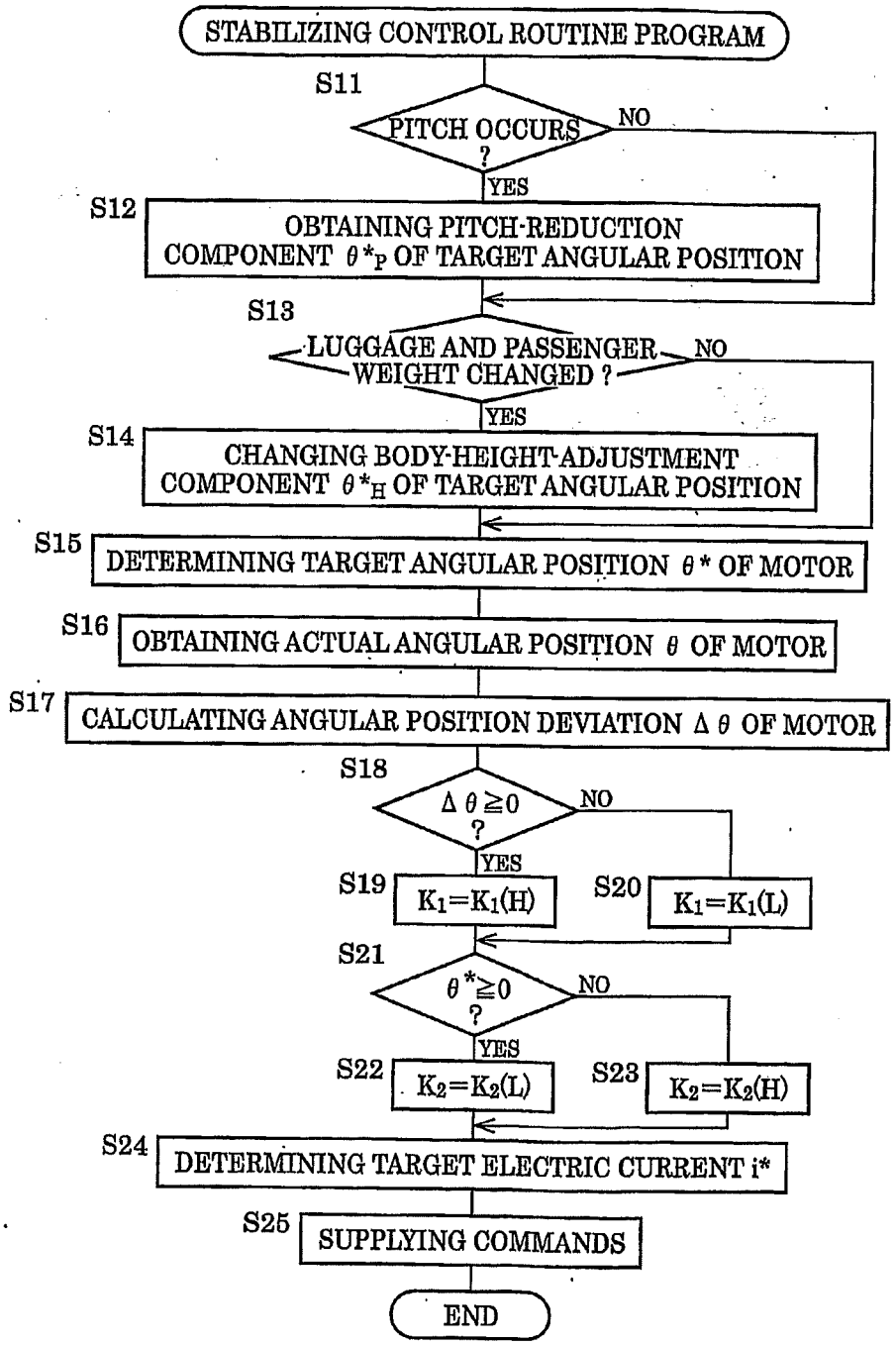
STABILIZING CONTROL ROUTINE PROGRAM
S11
PITCH OCCURS ?
NO
YES
S12
OBTAINING PITCH-REDUCTION COMPONENT θ*P OF TARGET ANGULAR POSITION
S13
LUGGAGE AND PASSENGER WEIGHT CHANGED ?
NO
YES
S14
CHANGING BODY-HEIGHT-ADJUSTMENT COMPONENT θ*H OF TARGET ANGULAR POSITION
S15
DETERMINING TARGET ANGULAR POSITION θ* OF MOTOR
S16
OBTAINING ACTUAL ANGULAR POSITION θ OF MOTOR
S17
CALCULATING ANGULAR POSITION DEVIATION Δθ OF MOTOR
S18
Δθ≧0 ?
NO
YES
S19
K1=K1(H)
S20
K1=K1(L)
S21
θ*≧0 ?
NO
YES
S22
K2=K2(L)
S23
K2=K2(H)
S24
DETERMINING TARGET ELECTRIC CURRENT i*
S25
SUPPLYING COMMANDS
END

VEHICLE STABILIZER SYSTEM

TECHNICAL FIELD

[0001] The present invention relates in general to a vehicle stabilizer system that is to be installed in a vehicle, and more particularly to such a vehicle stabilizer system that is equipped with an actuator so as to be capable of changing a stabilizing force generated by a stabilizer bar of the stabilizer system.

BACKGROUND ART

[0002] There is known a vehicle stabilizer-system for reducing roll of a vehicle body, by utilizing a stabilizing force that is dependent on a torsional reaction of a stabilizer bar. In recent years, as disclosed in JP-2004-314947A (publication of unexamined Japanese Patent Application laid open in 2004) and JP-H05-26525U (publication of unexamined Japanese Utility Model Application laid open in 1993), there has been proposed a vehicle stabilizer system equipped with an actuator so as to be capable of changing the stabilizing force. Such a stabilizer system (hereinafter referred to as "active stabilizer system" where appropriate) has been already put to practical use.

[0003] The stabilizer system disclosed in JP-H05-26525U has, in addition to a body roll reducing function as its inherent function, a function of adjusting height of a vehicle body by changing the stabilizing force. The body-height adjusting function as an additional function increases the practical value of the vehicle stabilizer system. However, the disclosed vehicle stabilizer system is provided with an actuator, and the height of the vehicle body is adjusted by a force (hereinafter referred to as "rotational force" where appropriate) of a motor of the actuator. In this arrangement, it is necessary to keep supplying an electric power to the motor when the adjusted height of the vehicle body has to be maintained. This results in increase of a load imposed on the motor. Further, where the supplied electric power (hereinafter referred to as "body-height maintaining electric power" where appropriate) has to be large, this arrangement is disadvantageous from a point of view of electric power saving. Such disadvantages are factors impeding application of the stabilizer system to adjustment of height of the vehicle body, namely, impeding a practical use of the stabilizer system having the function of adjusting height of the vehicle body.

DISCLOSURE OF INVENTION

Object to be Solved by the Invention

[0004] The present invention was made in the light of the background art discussed above. It is therefore an object of the invention to provide a vehicle stabilizer system having a high serviceability in its practical use.

Measure for Achieving the Object

[0005] For achieving the above object, the essence of the present invention is that, in an active stabilizer system for a vehicle, namely, in a vehicle stabilizer system equipped with an actuator, the actuator is arranged such that its negative efficiency is made different depending on a direction of a force generated by a motor that is incorporated in the actuator.

Effects of the Invention

[0006] The stabilizer system constructed according to the invention can be arranged such that the negative efficiency of the actuator is relatively low when the direction of the force of the motor causes a stabilizing force to force a wheel and a body of the vehicle in one of a direction (hereinafter referred to as "bound direction" where appropriate) toward each other and another direction (hereinafter referred to as "rebound direction" where appropriate) away from each other, and such that the negative efficiency is relatively high when the direction of the force of the motor causes the stabilizing force to force the wheel and the body of the vehicle in the other of the bound direction and the rebound direction. This arrangement makes it possible to reduce an electric power required to maintain a height of the vehicle body against an external force forcing the wheel and the body in the above-described other of the bound and rebound directions. That is, where the stabilizer system has a function of adjusting the height of the vehicle body, the above-described advantageous arrangement makes it possible to reduce a load imposed on the motor and accordingly to reduce the electric power consumed in the system.

Modes of the Invention

[0007] There will be described various modes of the invention deemed to contain claimable features for which protection is sought. Each of these modes of the invention is numbered like the appended claims and depends from the other mode or modes, where appropriate, for easier understanding of the technical features disclosed in the present specification. It is to be understood that the present invention is not limited to the technical features or any combinations thereof which will be described, and shall be constructed in the light of the following descriptions of the various modes and preferred embodiments of the invention. It is to be further understood that a plurality of elements or features included in any one of the following modes of the invention are not necessarily provided all together, and that the invention may be embodied with selected at least one of the elements or features described with respect to the same mode. It is to be still further understood that a plurality of elements or features included in any one of the following modes of the invention may be combined with at least one additional element or feature in the light of the following descriptions of the various modes and the preferred embodiments of the invention, and that the invention may be embodied with such a possible combination with respect to the same mode.

[0008] (1) A stabilizer system for a vehicle, comprising: (a) a stabilizer bar including (a-1) a torsion bar portion, and (a-2) an arm portion that extends in a direction not parallel to the torsion bar portion, from the torsion bar portion toward a wheel of the vehicle; and (b) an actuator including (b-1) a motor, and (b-2) a speed reducer that reduces a speed of the motor while transmitting a force of the motor to the torsion bar portion of the stabilizer bar, wherein the stabilizer bar generates a stabilizing force which is dependent on a reaction that is generated as a result of torsion of the torsion bar portion, and which forces the wheel and the body of the vehicle in a selected one of a direction toward each other and a direction away from each other, wherein the actuator allows

the stabilizer bar to generate the stabilizing force whose magnitude is dependent on a magnitude of the force of the motor and is changeable depending on an amount of rotation of the torsion bar portion, and wherein the actuator includes an actuator-efficiency changing mechanism changing a negative efficiency of the actuator, depending on a direction of the force of the motor, the reverse efficiency corresponding to a ratio of the magnitude of the rational force of the motor, minimally required to inhibit the motor from being moved by an external force that acts on the stabilizer bar, to an magnitude of the external force.

[0009] The term "negative efficiency" recited in this mode (1) may be interpreted to correspond to a parameter indicative of the magnitude of the force (e.g., torque or rotational force) of the motor minimally required to inhibit the motion (e.g., rotation) of the motor that could be caused by the external force applied to the actuator, namely, the external force acting on the stabilizing bar and generated due to various factors (such as irregularity of road surface, body roll, pitch, bounce, static load of the vehicle body, and elasticity of suspension spring interposed between the wheel and vehicle body). A low value of the negative efficiency indicates that the motor is hard to be moved by the external force. The direction of the force of the motor (e.g., a forward direction and a reverse direction of the motor) is arranged to correspond to the direction of the stabilizing force, depending on which the wheel and the body of the vehicle are forced by the stabilizing force in a selected one of the direction toward each other and the direction away from each other. Further, the stabilizing force serves as a reaction that is a force opposite to the external force exerted on the stabilizer bar. Therefore, in the stabilizer system defined in this mode (1), owing to the provision of the actuator-efficiency changing mechanism, the magnitude of the force of the motor minimally required to inhibit the motion of the motor, is made different depending upon whether the external force forces the wheel and the body in the bound or rebound direction. This arrangement makes it possible to reduce the magnitude of the force of the motor that is to act in a predetermined direction, i.e., a direction causing the stabilizing force to force the wheel and the body in a selected one of the bound and rebound directions.

[0010] The stabilizer system defined in this mode (1) can be advantageously used for adjusting the height of the vehicle body. When the height of the body is intended to be maintained by the force of the motor acting in the above-described predetermined direction, it is possible to maintain the body height with a reduced load imposed on the motor and a reduced electric power consumed by the motor. That is, in the present stabilizer system, the body-height adjusting function can be satisfactorily established by the actuator that is relatively small-sized to enable the electric power consumption to be remarkably reduced.

[0011] (2) The stabilizer system according to mode (1), wherein the actuator-efficiency changing mechanism is provided by a construction of the speed reducer by which an amount of loss in transmission of the force of the motor to the torsion bar portion is changed depending on the direction of the force of the motor.

[0012] In the stabilizer system defined in this mode (2), the actuator-efficiency changing mechanism (that changes the negative efficiency of the actuator depending on the direction of the force of the motor) is provided by the above-described construction of the speed reducer by which an internal loss of the speed reducer is made different depending on the direction of the force of the motor. The stabilizer system of this mode (2) is advantageous because the negative efficiency can be easily changed by varying the internal loss of the speed reducer depending on the direction of the force of the motor. The negative efficiency is reduced with increase in the internal loss of the speed reducer (i.e., the amount of loss in transmission of the force of the motor to the torsion bar portion through the speed reducer), and is increased with reduction in the internal loss of the speed reducer. The construction for changing the internal loss, which may be referred to as an internal-loss changing mechanism, is not limited to a particular construction. However, the construction is preferably established by an arrangement in which each tooth of at least one of gears mesh with each other has a tooth profile that is asymmetrical with respect to a centerline of the tooth, such that a pressure angle measured in one of opposite side portions of the tooth that are located on respective opposite sides of the centerlines is different from that measured in the other of the opposite side portions of the tooth, and/or such that a contact area (at which the tooth is brought into contact with a tooth of the other gear) in one of the opposite side portions of the tooth is different from that in the other of the opposite side portions of the tooth. Further, in addition to or in place of such a configurationally asymmetrical arrangement, a coefficient of friction measured in one of the opposite side portions of the tooth may be different from that in the other of the opposite side portions of the tooth. These preferable arrangements are based on a fact that each tooth of the at least one of the gears is brought into contact at one of its opposite side portions with a tooth of the other gear, which one is determined depending on the direction of the force of the motor.

[0013] Where the internal loss of the speed reducer is made different depending on the direction of the force of the motor, it is common that a positive efficiency of the actuator as well as the negative efficiency of the actuator is made different depending on the direction of the force. The term "positive efficiency" may be interpreted to correspond to a parameter indicative of the magnitude of the force (i.e., torque) of the motor minimally required to cause the torsion bar portion to be rotated against the external force that is exerted on the actuator, more precisely, correspond to a ratio of a magnitude of the external force to the magnitude of the force of the motor minimally required to cause the rotation of the torsion bar portion. The positive efficiency is relatively high when the force of the motor acts in a direction causing the negative efficiency to be relatively high, and is relatively low when the force of the motor acts in another direction causing the negative efficiency to be relatively low. This means that the torsion bar portion is hard to be rotated by motion of the motor in a direction that is hard to be caused by the external force, although the torsional bar portion is easy to be rotated by motion of the motor in another direction that is easy to be caused by the external force. This character could somewhat impede the stabilizing force from being positively increased where the increase of the stabilizing force is intended by the motion of the motor in the direction that is hard to be caused by the external force. However, the negative efficiency being low provides an advantage that is larger than a disadvantage provided by the low positive efficiency. This is because, in general, the body-height adjusting function is performed mainly by inhibiting the torsion bar portion from being rotated by the external force, rather than by causing the torsion bar portion to be rotated against the external force. That

is, in the performance of the body-height adjusting function, in general, the rotation of the torsion bar portion is inhibited for a length of time that is larger than a length of time for which the rotation of the torsion bar portion is caused. It is therefore possible to reduce the load imposed on the motor and to reduce the electric power consumed in the system, particularly, where the system has the body-height adjusting function.

[0014] (3) The stabilizer system according to mode (1) or (2), wherein the speed reducer includes a first gear and a second gear which mesh with each other, and which are rotated relative to each other by operation of the motor, wherein the second gear is connected to the torsion bar portion, and wherein the actuator-efficiency changing mechanism is provided by a construction of the speed reducer in which each tooth of at least one of the first and second gears has a tooth profile that is asymmetrical with respect to a centerline of each tooth such that a pressure angle measured in one of opposite side portions of each tooth that are located on respective opposite sides of the centerline is different from that measured in the other of the opposite side portions of each tooth.

[0015] The construction of the speed reducer defined in this mode (3) may be considered as an example of the above-described internal-loss changing mechanism by which the internal loss of the actuator is made different depending on the direction of the force of the motor. When each tooth having the asymmetrical tooth profile is in contact, at one of its opposite sides whose pressure angle is large, with a teeth of the other gear, the internal loss of the actuator is large whereby the negative efficiency of the actuator is low. In the stabilizer system defined in this mode (3), the actuator efficiency mechanism changing the negative efficiency can be provided by a simple construction.

[0016] (4) The stabilizer system according to any one of modes (1)-(3), wherein the actuator-efficiency changing mechanism changes the reverse efficiency of the actuator, such that the reverse efficiency is smaller when the direction of the force of the motor causes the stabilizing force to force the wheel and the body of the vehicle in the direction away from each other, than when the direction of the force of the motor causes the stabilizing force to force the wheel and the body of the vehicle in the direction toward each other.

[0017] The body-height adjusting function can be performed by the stabilizer system according to various manners, which can be generally categorized into two forms. According to one of the two forms, the vehicle body is lowered relative to the wheel from an initial or reference height by application of the stabilizing force, whereby the body height is adjusted to a desired height that is smaller than the reference height. In this case, the reference height corresponds to a maximum height, i.e., a maximum distance between the vehicle body and the wheel, which is a maximum value possible during running of the vehicle in its normal use. According to the other form, the vehicle body is raised relative to the wheel from the reference height by application of the stabilizing force, whereby the body height is adjusted to a desired height that is larger than the reference height. In this case, the reference height corresponds to a minimum height, i.e., a minimum distance between the vehicle body and the wheel, which is a minimum value possible during running of the vehicle in its normal use. The stabilizer system defined in this mode (4) is advantageous, particularly, where the body-height adjusting function is performed according to above-described other form (latter form), since the load imposed on the motor and the electric power supplied to the motor can be reduced when the stabilizing force forces the body and the wheel in the direction away from each other, namely, when the height of the body is to be maintained after the body has been raised. It is noted that the above-described initial or reference height is a height that is established merely by a biaser such as a suspension spring (biasing the body and the wheel in the direction away from each other) before the stabilizing force is applied to control the body height. In this sense, the reference height may be referred to as a pre-stabilizing-force-application height or pre-control height.

[0018] For example, the stabilizer system defined in this mode (4) may be arranged such that, where the body height is reduced to be smaller than the reference height as a result of increase in weight of luggage loaded on the vehicle and weight of passenger riding on the vehicle, the body height is adjusted by compensating the reduction in the body height by application of the stabilizing force. Further, the present system may be arranged such that the body height is kept in the reference height during running of the vehicle on a well-conditioned road and such that the body height is increased to be larger than the reference height by application of the stabilizing force during running of the vehicle on a poor-conditioned road such as so-called "mogul" road, so as to adjust the body height in a manner varying depending on the condition of the road.

[0019] (5) The stabilizer system according to any one of modes (1)-(4), wherein the speed reducer is provided by a harmonic gear set.

[0020] The harmonic gear set (which is also called "harmonic drive" or "strain wave gearing") provides a simple construction capable of establishing an extremely high speed ratio (high reduction ratio) in the speed reducer, namely, establishing a low ratio of the amount of rotation of the torsion bar portion to the amount of the motion of the motor. That is, where the speed reducer is provided by the harmonic gear set as in the stabilizer system defined in this mode (5), it is possible to easily construct the actuator having a low negative efficiency. Thus, the harmonic gear set is advantageously employed as the speed reducer of the actuator as a component of the stabilizer system.

[0021] (6) The stabilizer system according to any one of modes (1)-(5), comprising: a pair of stabilizer bars each of which is provided by the stabilizer bar; and a pair of actuators each of which is provided by the actuator, wherein the arm portion of each of the pair of stabilizer bars extends toward a corresponding one of right and left wheels as the wheel of the vehicle, and wherein the torsion bar portion of each of the pair of stabilizer bars is connected, at one of axially opposite end portions thereof that is remote from the arm portion of the each of the pair of stabilizer bars, to the speed reducer of a corresponding one of the pair of actuators.

[0022] The stabilizer system defined in this mode (6) is an active stabilizer system of right/left independent type in which the pair of stabilizer bars and the pair of actuators are provided for the respective right and left wheels so that the stabilizing force acting on the right wheel and the body and the stabilizing force acting on the left wheel and the body are controllable independently of each other. In this stabilizer system of right/left independent type, by controlling the pair of actuators, it is possible to carry out roll reduction control and pitch reduction control in active manners and also body-height adjustment control.

[0023] (7) The stabilizer system according to any one of modes (1)-(5), wherein the stabilizer bar includes a pair of arm portions each of which is provided by the arm portion, wherein the pair of arm portions extend from axially opposite ends of the torsion bar portion toward respective right and left wheels each as the wheel of the vehicle, and wherein the torsion bar portion is connected, at an axially intermediate portion thereof, to the speed reducer of the actuator.

[0024] The stabilizer system defined in this mode (7) is an active stabilizer system of right/left in-phase rotation type in which the pair of arm portions extending from the respective opposite ends of the torsion bar portion and provided for the respective right and left wheels are rotatable in the same direction by the actuator. In this stabilizer system of right/left in-phase type, the active pitch reduction control and the body-height adjustment control can be carried out, although the active roll reduction control cannot be carried out.

BRIEF DESCRIPTION OF DRAWINGS

[0025] The above and other objects, features, advantages and technical and industrial significance of the present invention will be better understood by reading the following detailed description of presently preferred embodiments of the invention, when considered in connection with the accompanying drawings, in which:

[0026] FIG. 1 is a view showing an overall construction of a stabilizer system according to a first embodiment of the invention;

[0027] FIG. 2 is a cross sectional view of an actuator as a component of a stabilizer device of the first embodiment of the invention;

[0028] FIG. 3 is a view of the stabilizer device of the first embodiment that is connected to a suspension device, as seen from an upper side of a vehicle;

[0029] FIG. 4 is a view of the stabilizer device of the first embodiment that is connected to the suspension device, as seen from a rear side of the vehicle;

[0030] FIG. 5 is a view of the stabilizer device of the first embodiment provided for a front left wheel of the vehicle, as seen from the rear side of the vehicle;

[0031] FIG. 6 is a view of the stabilizer device of the first embodiment provided for a rear left wheel of the vehicle, as seen from the rear side of the vehicle;

[0032] FIG. 7 is a view showing a direction of a stabilizing force generated by each stabilizer device and a change in a toe angle of each wheel during a left turn of the vehicle;

[0033] FIGS. 8A and 8B are views showing the direction of the stabilizing force generated by each stabilizer device and the change in the toe angle of each wheel during a right turn of the vehicle;

[0034] FIG. 9 is a graph showing a positive efficiency and a negative efficiency of a conventional actuator;

[0035] FIG. 10 is graph showing a positive efficiency and a negative efficiency of the actuator of the stabilizer device of the first embodiment;

[0036] FIGS. 11A and 11B are a set of views showing meshing of a flexible gear and a ring gear that constitute a speed reducer as a component of the stabilizer device of the first embodiment;

[0037] FIG. 12 is a data map representative of a relationship between a roll-reduction component of a target angular position of a motor and a lateral acceleration parameter value;

[0038] FIG. 13 is a data map representative of a relationship between a pitch-reduction component of the target angular position of the motor and an actual longitudinal acceleration value;

[0039] FIG. 14 is a flow chart showing a stabilizing control routine program that is executed in the stabilizer system of the first embodiment;

[0040] FIG. 15 is a view showing an overall construction of a stabilizer system according to a second embodiment of the invention;

[0041] FIG. 16 is a cross sectional view of an actuator as a component of a stabilizer device of the second embodiment of the invention;

[0042] FIG. 17 is a view of the stabilizer devices of the second embodiment each of which is connected to a suspension device, as seen from an upper side of a vehicle; and

[0043] FIG. 18 is a flow chart showing a stabilizing control routine program that is executed in the stabilizer system of the second embodiment.

BEST MODE FOR CARRYING OUT THE INVENTION

[0044] There will be described embodiments of the present invention, by reference to the accompanying drawings. It is to be understood that the present invention is not limited to the following embodiments, and may be otherwise embodied with various changes and modifications, such as those described in the foregoing "MODES OF THE INVENTION", which may occur to those skilled in the art.

(A) First Embodiment

[Construction and Function of Stabilizer System]

[0045] FIG. 1 schematically shows a vehicle stabilizer system 10 constructed according to a first embodiment of the invention. The stabilizer system 10 includes four stabilizer devices 20 provided for respective four wheels (i.e., front right, front left, rear right and rear left wheels) 12. Each of the stabilizer devices 20 includes a stabilizer bar 28, an actuator 32 operable to rotate the stabilizer bar 28, and a link rod 34. In a vehicle equipped with the present stabilizer system 10, four suspension devices 36 are provided for the respective four wheels, independently of each other. The stabilizer bar 28 is connected at one of its opposite end portions to the corresponding suspension device 36 via the link rod 34, and is connected at the other end portions to the corresponding actuator 32. As is apparent from FIG. 1, the suspension device 36, stabilizer device 20 and stabilizer bar 28 are provided for each of the four wheels of the vehicle. In the following description, each of the suspension device 36, stabilizer device 20 and stabilizer bar 28 is referred together with one of reference signs FR, FL, RR, RL indicative of the respective front right, front left, rear right and rear left wheels, where it should be clarified which one of the four wheels the referred device or component corresponds to.

[0046] As shown in FIG. 2, the actuator 32 includes an electric motor 40 as a drive source, and a speed reducer 42 arranged to reduce a rotational speed of the electric motor 40 while outputting a torque or rotational force (hereinafter referred to as "motor force" where appropriate) of the electric motor 40. The electric motor 40 and the speed reducer 42 are disposed within a housing 44 of the actuator 32. The housing 44 is fixedly attached to a body of the vehicle through an attachment member 46 that is fixed to an end portion of the

housing 44. An output shaft 48 is arranged to extend throughout the housing 44 and project out from another end portion of the housing 44. The output shaft 48 serves as an output portion of the actuator 32, and is supported by the housing 44 such that the output shaft 48 is rotatable relative to the housing 44 and axially unmovable relative to the housing 44. The output shaft 48 is connected, at one of its axially opposite end portions that is located within the housing 44, to the speed reducer 42, so as to serve also as an output portion of the speed reducer 42. A bearing bushing 49 is provided to support an axially intermediate portion of the output shaft 48, so that the output shaft 48 is rotatably held by the housing 44 through the bearing bushing 49.

[0047] The electric motor 40 includes a plurality of coils 50 that are fixedly disposed on a circumference along an inner surface of a circumferential wall of the housing 44, a motor shaft 52 that is provided by a hollow member rotatably held by the housing 44, and a permanent magnet 54 which is fixed to an outer circumferential surface of the motor shaft 52 and which is radially opposed to the coils 50. The electric motor 40 is provided by a three-phase DC brushless motor, so that each of the coils 50 serves as a stator while the permanent magnet 54 serves as a rotor. An angular position sensor 55 is provided in the housing 44, so as to detect an angular position of the motor shaft 52, i.e., an angular position of the electric motor 40. The angular position sensor 55 is constituted principally by a rotary encoder, and outputs a signal that is used in controlling the actuator 32, namely, controlling the stabilizer device 20.

[0048] The speed reducer 42 is provided by a harmonic gear set (which is also called "harmonic drive (trademark)" or "strain wave gearing"), and includes a wave generator 56, a flexible gear (flexspline) 58 and a ring gear (circular spline) 60. The wave generator 56 includes an elliptic cam and a ball bearing fitted on an outer circumferential surface of the elliptic cam, and is fixed to an end portion of the motor shaft 52. The flexible gear 58 is provided by a cup-shaped member having a circumferential wall portion that is elastically deformable, and a plurality of teeth 59 (see FIGS. 11A and 11B) formed on its outer circumferential surface. The teeth 59 are located in one of axially opposite end portions of the flexible gear 58 that is close to an opening end of the cup-shaped flexible gear 58. The flexible gear 58 is connected to the above-described one of the axially opposite end portions of the output shaft 48, so as to be held by the output shaft 48. Described more specifically, the output shaft 48 serving as the output portion of the speed reducer 42 is arranged to extend throughout the motor shaft 52 provided by the hollow member. The above-described one of the axially opposite end portions of the output shaft 48 projects out from the motor shaft 52, and is serrated in its outer circumferential surface so as to be held in engagement with an inner circumferential surface of a hole formed through a bottom wall of the cup-shaped flexible gear 58 that is also serrated. Owing to the serration engagement, the output shaft 48 and the flexible gear 58 are connected to each other, and are unrotatable and axially unmovable relative to each other. The ring gear 60 is provided by a ring member fixed to the housing 44, and has a plurality of teeth 61 (see FIGS. 11A and 11B) formed on its inner circumferential surface. The number of teeth 61 of the ring gear 60 is slightly larger than the number of teeth 59 of the flexible gear 58, for example, by two. The flexible gear 58 is fitted at its circumferential wall portion on the wave generator 56, and is elastically deformed to have an elliptic shape. The flexible gear 58 meshes, at two portions thereof that lie substantially on a long axis of the elliptic shape, with the ring gear 60, while not meshing at the other portions thereof with the ring gear 60. In the thus constructed speed reducer 42, while the wave generator 56 is rotated by a single rotation (by 360°), namely, while the motor shaft 52 of the electric motor 40 is rotated by a single rotation, the flexible gear 58 and the ring gear 60 are rotated relative to each other by an amount corresponding to a difference therebetween with respect to the number of teeth.

[0049] Each suspension device 36 of independent type is provided by a multi-link suspension as is apparent from FIGS. 3 and 4, which are views as seen from an upper side and a rear side of the vehicle, respectively. The suspension device 36 will be described by reference to FIGS. 3 and 4. Although the front suspension devices 36FR, 36FL provided for the front wheels 12FR, 12FL as steered wheels and the rear suspension devices 36RR, 36RL provided for the rear wheels 12RR, 12RL as non-steered wheels are slightly different in construction, the description of the suspension device 36 will be made by reference to the same drawing figures, for simplifying the description.

[0050] The suspension device 36 is equipped with an arm assembly that includes a first upper arm 72, a second upper arm 74, a first lower arm 76, a second lower arm 78 and a toe control arm 80. Each of the five arms 72, 74, 76, 78, 80 is connected at one of its longitudinal end portions to the vehicle body, pivotably relative to the vehicle body. Meanwhile, each of the five arms 72, 74, 76, 78, 80 of each of the rear suspension devices 36RR, 36RL is connected at the other end portion to an axle carrier 82, and each of the five arms 72, 74, 76, 78, 80 of each of the front suspension devices 36FR, 36FL is connected at the other end portion to a knuckle 83. Each of the rear wheels 12RR, 12RL is held by the axle carrier 82 so as to be rotatable about its axle, while each of the front wheels 12FR, 12FL is held by the knuckle 83 so as to be rotatable about its axle and steerable. When each wheel 12 and the vehicle body are vertically displaced toward or away from each other, a corresponding one of the five arms 72, 74, 76, 78, 80 is pivoted about the above-described end portion (i.e., vehicle-body-side end portion), whereby the above-described other end portion (wheel-side end portion) of the corresponding one of the five arms 72, 74, 76, 78, 80 is vertically displaced relative to the vehicle body. The second lower arm 78 serving as a suspension arm is connected to a portion of the axle carrier 82 or the knuckle 83 that is located on the rear and lower side of an axle holding portion of the axle carrier 82 or the knuckle 83 that holds the axle of the wheel 12. Further, each axle 82 or knuckle 83 is pressed or pulled in its axial direction by the toe control arm 80 that is connected to the axle 82 or knuckle 83, when the corresponding wheel 12 and the vehicle body are vertically displaced toward or away from each other. The suspension device 36 is further equipped with a shock absorber 84 and a suspension spring 86 that are interposed between the second lower arm 78 and a mount portion of a tire housing. That is, the suspension device 36 is arranged to generate a damping force absorbing vibrations caused by the displacement of the wheel 12 and the vehicle body toward and away from each other, while elastically interconnecting the wheel 12 and the vehicle body.

[0051] The stabilizer bar 28 of the stabilizer device 20 includes a torsion bar portion 90 which extends substantially in a width or lateral direction of the vehicle, and an arm portion 92 which is contiguous to the torsion bar portion 90

and which extends in a direction not parallel to the torsion bar portion **90**, e.g., substantially in a forward direction of the vehicle. The torsion bar portion **90** of the stabilizer bar **28** is rotatably held, at its portion that is close to the arm portion **92**, by a retainer **94** that is fixed to the vehicle body. The actuator **32** is fixed through the above-described attachment **46** to a widthwise central portion of the vehicle body. The torsion bar portion **90** is connected at one of its longitudinal end portions (that is located an inner side of the other of the longitudinal end portions in the width direction of the vehicle) to the longitudinal end portion of the output shaft **48** that projects out from the housing **44**. Since the torsion bar portion **90** and the output shaft **48** are connected to each other through a so-called serration engagement, the torsion bar portion **90** and the output shaft **48** are not rotatable relative to each other. Meanwhile, the arm portion **92** is connected at one of its longitudinal end portions (that is remote from the torsion bar portion **90**) to the second lower arm **78** via the link rod **34**. A link-rod connection portion **98** is provided on the second lower arm **78** of the suspension device **36**, so that the link rod **34** is rockably connected at its longitudinally opposite end portions to the link-rod connecting portion **98** and the arm portion **92** of the stabilizer bar **28**, respectively.

[0052] When the output shaft **48** is rotated by rotation of the electric motor **40**, the torsion bar portion **90** of the stabilizer bar **28** is twisted. As a result of the twisting deformation or torsion of the torsion bar portion **90**, a reaction is generated and then transmitted to the second lower arm **78** via the arm portion **92**, link rod **34** and link-rod connection portion **98**. This reaction acts as a stabilizing force forcing upwardly or downwardly the second lower arm **98** toward or away from the vehicle body, namely, forcing the wheel **12** and the vehicle body toward each other or away from each other. Thus, in the stabilizer device **24**, a magnitude of the generated stabilizing force is changeable by controlling operation of the actuator **32**.

[0053] To the electric motor **40** included in the actuator **32**, an electric power is supplied from a power source in the form of a buttery **130**, as shown in FIG. **1**. The present stabilizer system **10** includes four inverters **132** provided for the respective stabilizer devices **20**. Each of the inverters **132** serving as drive circuits is disposed between the buttery **130** and a corresponding one of the stabilizer devices **20**, so that the electric power is supplied to the electric motor **40** of each of the stabilizer devices **20** via a corresponding one of the corresponding inverters **132**. Since the electric motor **40** is driven by a constant voltage, an amount of the electric power supplied to the electric motor **40** is changed by changing an amount of electric current supplied to the electric motor **40**. That is, the force generated by the electric motor **40** is dependent on the amount of the supplied electric current, which can be changed, for example, by a PWM (pulse width modulation) control performed by the inverter **132**. In the PWM control, the inverter **132** is arranged to suitably control a duty ratio, i.e., a ratio of pulse ON time to a sum of the pulse ON time and pulse OFF time.

[0054] The actuators **32** of the respective stabilizer devices **20** are controlled by a stabilizer electronic control unit (stabilizer ECU) **150**, as shown in FIG. **1**, which is constituted principally by a computer including CPU, ROM and RAM. To the stabilizer ECU **150**, there is connected, in addition to the angular position sensors **55**, an operating angle sensor **152** arranged to detect an operating angle of a steering wheel as a steering operating member, i.e., an operating amount (as a kind of an steering amount) of the steering wheel, a running speed sensor **154** arranged to detect a running speed of the vehicle, a lateral acceleration sensor **156** arranged to detect an actual acceleration of the vehicle as measured in the lateral direction of the vehicle, a longitudinal acceleration sensor **158** arranged to detect an actual acceleration of the vehicle as measured in the longitudinal direction of the vehicle, a throttle sensor **160** arranged to detect an opening angle of a throttle valve, a brake pressure sensor **162** arranged to detect a brake pressure, a total of four stroke sensors **163** each arranged to detect a distance between the corresponding wheel **12** and the vehicle body, and a total of four door sensors **164** each arranged to detect opening and closing of a corresponding one of doors. Further, the stabilizer ECU **150** is connected to the inverters **132**, so that each of the respective stabilizer devices **20** can be controlled by controlling a corresponding one of the inverters **132**. The ROM included in the computer constituting the stabilizer ECU **150** stores various control programs for executing routines as described below and also various data related to the control of each stabilizer device **20**. In FIG. **1**, each of the angular position sensors **55** is represented by "θ", the operating angle sensor **152** is represented by "δ", the running speed sensor **154** is represented by "v", the lateral acceleration sensor **156** is represented by "Gy", the longitudinal acceleration sensor **158** is represented by "Gzg", the throttle sensor **160** is represented by "Sr", the brake pressure sensor **162** is represented by "Br", each of the stroke sensors **163** is represented by "St", and each of the door sensors **164** is represented by "Dr".

[0055] In the present stabilizer system **10**, the four stabilizer devices **20** are controllable independently of each other. That is, the stabilizing forces produced by the respective stabilizer devices **20** are controlled independently of each other, for executing a roll reduction control for reducing roll of the vehicle body, a pitch reduction control for reducing pitch of the vehicle body, and a body-height adjustment control for adjusting a height of the vehicle body from a road surface.

[0056] Described specifically, the roll reduction control is executed upon turning of the vehicle, to restrain or reduce the roll of the vehicle body, by controlling each of the stabilizer devices **20** provided for inside wheels **12** (having a smaller turning radius) to cause the stabilizing force to force the corresponding wheel **12** and the vehicle body in a bound direction, i.e., a direction toward each other, while controlling each of the stabilizer devices **20** provided for outside wheels **12** (having a larger turning radius) to cause the stabilizing force to force the corresponding wheel **12** and the vehicle body in a rebound direction, i.e., a direction away from each other, in response to a roll moment resulting from the turning of the vehicle. The pitch reduction control is executed upon braking (deceleration) of the vehicle, to restrain or reduce a front-end dive of the vehicle body, by controlling each of the front stabilizer devices **20FR**, **20FL** provided for the front wheels **12FR**, **12FL** to cause the stabilizing force to force the corresponding wheel **12** and the vehicle body in the rebound direction, while controlling each of the rear stabilizer devices **20RR**, **20RL** provided for the rear wheels **12RR**, **12RL** to cause the stabilizing force to force the corresponding wheel **12** and the vehicle body in the bound direction, in response to a pitch moment resulting from the braking (deceleration) of the vehicle. The pitch reduction control is executed also upon acceleration of the vehicle, to restrain or reduce a rear-end squat of the vehicle body, by controlling each of the rear

stabilizer devices 20RR, 20RL provided for the rear wheels 12RR, 12RL to cause the stabilizing force to force the corresponding wheel 12 and the vehicle body in the rebound direction, while controlling each of the front stabilizer devices 20FR, 20FL provided for the front wheels 12FR, 12FL to cause the stabilizing force to force the corresponding wheel 12 and the vehicle body in the bound direction, in response to a pitch moment resulting from the acceleration of the vehicle. The body-height adjustment control is executed in response to change in the height of the vehicle body caused by increase and reduction in weight of luggage loaded on the vehicle and weight of passenger riding on the vehicle, to keep the vehicle body height substantially in a predetermined level, by controlling each of the stabilizer devices 20 provided for the respective wheels 12 to cause the stabilizing force to force the corresponding wheel 12 and the vehicle body in such a direction that reduces the change in the vehicle body height.

[Relationship Between Suspension Geometry and Stabilizing Force]

[0057] Each of the suspension devices 36 constructed as described above causes a toe angle and a camber angle of the corresponding wheel 12 to be changed owing to motions of the respective five arms 72, 74, 76, 68, 80 resulting from the displacement of the corresponding wheel 12 toward or away from the vehicle body. Described specifically, when each wheel 12 and the vehicle body are displaced away from each other, namely, each wheel 12 is rebounded, the toe angle of each of the front wheels 12FR, 12FL is changed in an inward direction thereof (that causes front and rear portions of the wheel to be displaced inwardly and outwardly in the lateral direction of the vehicle, respectively), the camber angle of each of the front wheels 12FR, 12FL is changed in a negative direction thereof (that causes upper and lower portions of the wheel to be displaced inwardly and outwardly in the lateral direction of the vehicle, respectively), the toe angle of each of the rear wheels 12RR, 12RL is changed in an outward direction thereof (that causes the front and rear portions of the wheel to be displaced outwardly and inwardly in the lateral direction of the vehicle, respectively), and the camber angle of each of the rear wheels 12RR, 12RL is changed in a positive direction thereof (that causes the upper and lower portions of the wheel to be displaced outwardly and inwardly in the lateral direction of the vehicle, respectively). On the other hand, when each wheel 12 and the vehicle body are displaced toward each other, namely, each wheel 12 is bounded, the toe angle of each of the front wheels 12FR, 12FL is changed in the outward direction thereof, the camber angle of each of the front wheels 12FR, 12FL is changed in the positive direction thereof, the toe angle of each of the rear wheels 12RR, 12RL is changed in the inward direction thereof, and the camber angle of each of the rear wheels 12RR, 12RL is changed in the negative direction thereof.

[0058] Since each of the suspension devices 36 has a suspension geometry as described above, when the vehicle turns right or left, the toe angle and the camber angle of the inside front wheel 12 (that is rebounded) are changed in the inward direction and the negative direction, respectively, the toe angle and the camber angle of the inside rear wheel 12 (that is rebounded) are changed in the outward direction and the positive direction, respectively, the toe angle and the camber angle of the outside front wheel 12 (that is bounded) are changed in the outward direction and the positive direction, respectively, and the toe angle and the camber angle of the outside rear wheel 12 (that is bounded) are changed in the inward direction and the negative direction, respectively. Owing to the changes in the toe and camber angles of each wheel 12, the vehicle is given an understeer tendency as its cornering characteristic.

[0059] However, in the vehicle equipped with the present stabilizer system 10, since the roll reduction control is executed, as described above, for stabilizing posture of the vehicle body during turning of the vehicle, each of the stabilizer devices 20 is controlled to restrain displacement of the corresponding wheel 12 and the vehicle body toward or away from each other, which displacement results from turning of the vehicle. The execution of the roll reduction control leads to reduction in the understeer tendency as the cornering characteristic that is dependent on the above-described suspension geometry. In view of this, the present stabilizer system 10 is arranged such that the stabilizing force acts on each of the suspension devices 36 in such a manner that restrains the reduction in the understeer tendency or increases the understeer tendency. Specifically, the link rod 34 of each of the stabilizer devices 20 that is connected to the second lower arm 78 of each of the suspension devices 36 is inclined with respect to the second lower arm 78, in other words, an angle a defined by the link rod 34 and the second lower arm 78 serving as the suspension arm is not substantially 90°. Described more specifically, each of the link rods 34FR, 34FL is connected at its suspension-arm connection end portion to a corresponding one of the second lower arms 78FR, 78FL of the front suspension devices 36FR, 36FL with inclination of each link rod 34 with respect to the corresponding second lower arm 78 such that the suspension-arm connection end portion of each link rod 34 is located on inside of another end portion of each link rod 34 in the lateral direction of the vehicle, as shown in FIG. 5 that is a view of the stabilizer device 20 provided for the front left wheel 12FL. Meanwhile, each of the link rods 34RR, 34RL is connected at its suspension-arm connection end portion to a corresponding one of the second lower arms 78RR, 78RL of the rear suspension devices 36RR, 36RL with inclination of each link rod 34 with respect to the corresponding second lower arm 78 such that the suspension-arm connection end portion of each link rod 34 is located on outside of another end portion of each link rod 34 in the lateral direction of the vehicle, as shown in FIG. 6 that is a view of the stabilizer device 20 provided for the rear left wheel 12RL. In the present stabilizer system 10, the angle α_F defined by the link rod 34 and the second lower arm 78 of each of the front suspension devices 36FR, 36FL is about 58°, while angle α_R defined by the link rod 34 and the second lower arm 78 of each of the rear suspension devices 36RR, 36RL is also about 58°.

[0060] Since the link rod 34 is inclined as described above, a part of the stabilizing force produced by the stabilizer device 20 acts on the second lower arm 78 as the suspension arm in an axial direction of the second lower arm 78, namely, an axial force as a component of the stabilizing force acts on the second lower arm 78. Described specifically, in each of the front stabilizer devices 20FR, 20FL, as shown in FIG. 5, when the stabilizing force produced by each of the front stabilizer devices 20FR, 20FL acts in the rebound direction, the axial force acts on a corresponding one of the second lower arms 78FR, 78FL of the front suspension devices 36FR, 36FL inwardly in the lateral direction of the vehicle, as indicated by arrow of solid line. When the stabilizing force produced by each of the front stabilizer devices 20FR, 20FL acts in the

bound direction, the axial force acts on a corresponding one of the second lower arms **78**FR, **78**FL outwardly in the lateral direction of the vehicle, as indicated by arrow of broken line. On the other hand, in each of the rear stabilizer devices **20**RR, **20**RL, as shown in FIG. **6**, when the stabilizing force produced by each of the rear stabilizer devices **20**RR, **20**RL acts in the rebound direction, the axial force acts on a corresponding one of the second lower arms **78**RR, **78**RL of the rear suspension devices **36**RR, **36**RL outwardly in the lateral direction of the vehicle, as indicated by arrow of solid line. When the stabilizing force produced by each of the rear stabilizer devices **20**RR, **20**RL acts in the bound direction, the axial force acts on a corresponding one of the second lower arms **78**RR, **78**RL inwardly in the lateral direction of the vehicle, as indicated by arrow of broken line.

[0061] That is, each of the suspension devices **36** has compliance by which the toe and camber angles of each wheel **12** is changed depending on the direction of the axial force acting on the second lower arm **78** of a corresponding one of the suspension devices **36**. FIGS. **7**, **8**A and **8**B show the direction of the stabilizing force produced by each stabilizer device **20** and the consequent change in the toe and camber angles of the corresponding wheel **12** during a left turn of the vehicle. FIG. **7** is a plan view showing the change in the toe angle of each wheel **12**. FIG. **8**A is a rear view showing the change in the camber angle of each of the front wheels **12**FR, **12**FL. FIG. **8**B is a rear view showing the change in the camber angle of each of the rear wheels **12**RR, **12**RL. As is apparent from FIGS. **7**, **8**A and **8**B, during the left turn of the vehicle, the toe angle of each of the front left wheel **12**FL and the rear right wheel **12**RR is changed in the inward direction, the toe angle of each of the front right wheel **12**FR and the rear left wheel **12**RL is changed in the outward direction, the camber angle of each of the front left wheel **12**FL and the rear right wheel **12**RR is changed in the negative direction, and the camber angle of each of the front right wheel **12**FR and the rear left wheel **12**RL is changed in the positive direction. That is, during the left turn of the vehicle, the axial force based on the stabilizing force produced by each of the stabilizer devices **20**FL, **20**RR acts on the second lower arm **78** of a corresponding one of the suspension devices **36**FL, **36**RR in the direction that corresponds to a toe-in direction and a negative camber direction, while the axial force based on the stabilizing force produced by each of the stabilizer devices **20**FR, **20**RL acts on the second lower arm **78** of a corresponding one of the suspension devices **36**FR, **36**RL in the direction that corresponds to a toe-out direction and a positive camber direction, for thereby assuring the understeer tendency as the cornering characteristic of the vehicle. It is noted that, during a right turn of the vehicle, the toe and camber angles of each wheel **12** are changed in respective directions each opposite to that during the left turn of the vehicle, whereby the understeer tendency is assured also during the right turn of the vehicle.

[0062] As described above, in the vehicle equipped with the present stabilizer system **10**, the understeer tendency based on the suspension geometry is reduced by the roll reduction control that is executed for stabilizing posture of the vehicle body. However, as is clear from the above description, the reduction of the understeer tendency is sufficiently compensated by the axial force acting on the second lower arm **78** of each suspension device **36**. Therefore, by employing the present stabilizer system **10**, it is possible to maintain the understeer tendency as the cornering characteristic of the vehicle while satisfactorily reducing the roll of the vehicle body. Even in a case where the understeer tendency is not established as the cornering characteristic by the suspension geometry per se, the understeer tendency can be established by the present stabilizer system **10**.

[Actuator Efficiency Change Depending on Actuation Direction of Actuator]

[0063] There will be described an efficiency of an actuator, which is categorized into a positive efficiency and a negative efficiency. The negative efficiency η_N corresponds to a parameter indicative of a magnitude of the motor force minimally required to inhibit the rotation of the motor **40** that could be caused by an external force acting on the stabilizer bar **28** and generated due to various factors (such as body roll, pitch and static load of the vehicle body). More precisely, the negative efficiency η_N is defined as a ratio of the magnitude of the motor force minimally required to inhibit the rotation of the motor **40** caused by the external force, to a magnitude of the external force. On the other hand, the positive efficiency η_P corresponds to a parameter indicative of the magnitude of the motor force minimally required to cause the torsion bar portion **90** of the stabilizer bar **28** to be rotated against the external force. More precisely, the positive efficiency η_P is defined as a ratio of a magnitude of the external force, to the magnitude of the motor force minimally required to cause the rotation of the torsion bar portion **90**. The positive efficiency η_P and the negative efficiency η_N can be expressed by respective expressions as follows:

Positive efficiency $\eta_P = Fs/Fm$

Negative efficiency $\eta_N = Fm/Fs$,

[0064] where "Fs" represents the stabilizing force, and "Fm" represents the rotational force generated by the motor **40**.

[0065] In a common actuator, the positive efficiency η_P and the negative efficiency η_N correspond to an inclination of a positive-efficiency characteristic line and an inclination of a negative-efficiency characteristic line, respectively, which are shown in FIG. **9**. It can be considered that the rotational force (motor force) Fm is proportional to an electric current amount i supplied to the electric motor **40**. As is apparent from FIG. **9**, for producing the same magnitude of the stabilizing force Fs, the rotational force magnitude Fm_P of the motor **40** required under the positive efficiency characteristic is different from the rotational force magnitude Fm_N of the motor **40** required under the negative efficiency characteristic ($Fm_P > Fm_N$). Further, where the same magnitude of the rotational force Fm is generated by the motor **40**, the stabilizing force magnitude Fs_P generable under the positive efficiency characteristic is different from the stabilizing force magnitude FS_N generable under the negative efficiency characteristic ($FS_N > Fs_P$). That is, where an electric current amount i_m (corresponding to the magnitude of the rotational force Fm of the motor **40**) is supplied to the motor **40**, the motor **40** is not rotated by a magnitude of the external force that is equivalent to the stabilizing force magnitude FS_N (corresponding to the rotational force Fm according to the negative efficiency η_N), and the torsion bar portion **90** of the stabilizer bar **28** is rotated against a magnitude of the external force not larger than a magnitude of the external force that is equivalent to the stabilizing force magnitude Fs_P (corresponding to the rotational force Fm according to the positive efficiency η_P).

[0066] On the other hand, the actuator **32** included in the present stabilizer system **10** is arranged such that each of the positive efficiency and the negative efficiency is changed depending on the direction of the stabilizing force, i.e., the direction of the motor force, as shown in FIG. **10**. In FIG. **10**, the positive efficiency η_{PR} and the negative efficiency η_{NR} are those when the direction of the motor force causes the stabilizing force to force the wheel **12** and the vehicle body in the rebound direction, while the positive efficiency η_{PB} and the negative efficiency η_{NB} are those when the direction of the motor force causes the stabilizing force to force the wheel **12** and the vehicle body in the bound direction. As is apparent from FIG. **10**, the positive efficiency η_P and the negative efficiency η_N are both lower when the stabilizing force acts in the rebound direction than those when the stabilizing force acts in the bound direction. Specifically, for producing the same stabilizing force amount Fs_P under the positive efficiency characteristic, the rotational force magnitude Fm_{PR} of the motor **40** required when the direction of the motor force causes the stabilizing force to force the wheel **12** and the vehicle body in the rebound direction is larger than the rotational force magnitude Fm_{PB} of the motor **40** required when the direction of the motor force causes the stabilizing force to force the wheel **12** and the vehicle body in the bound direction, so that the motor **40** or the actuator **32** is harder to be rotated against the external force in the direction causing the stabilizing force to force the wheel **12** and the vehicle body in the rebound direction. Meanwhile, for producing the same stabilizing force amount FS_N under the negative efficiency characteristic, the rotational force magnitude Fm_{NR} of the motor **40** required when the direction of the motor force causes the stabilizing force to force the wheel **12** and the vehicle body in the rebound direction is smaller than the rotational force magnitude Fm_{NB} of the motor **40** required when the direction of the motor force causes the stabilizing force to force the wheel **12** and the vehicle body in the bound direction, so that the motor **40** or the actuator **32** is harder to be rotated against the external force in the direction causing the stabilizing force to force the wheel **12** and the vehicle body in the bound direction. As is understood from correspondence between each of the rotational force magnitudes Fm_{NR}, Fm_{NB}, Fm_{PR}, Fm_{PB} and a corresponding one of the electric current amounts i_{NR}, i_{NB}, i_{PR}, i_{PB} supplied to the motor **40**, under the positive efficiency characteristic, the electric power has to be supplied to the motor **40** by a larger amount when the stabilizing force acts in the rebound direction than when the stabilizing force acts in the bound direction. On the other hand, under the negative efficiency characteristic, the amount of the electric power to be supplied to the motor **40** may be smaller when the stabilizing force acts in the rebound direction than when the stabilizing force acts in the bound direction.

[0067] The actuator **32** includes an actuator-efficiency changing mechanism arranged to change the actuator efficiency depending on the direction of the motor force, i.e., depending on the direction of the stabilizing force. In the present embodiment, the actuator-efficiency changing mechanism is provided by a construction of the speed reducer **42** of the actuator **32** by which an amount of loss in transmission of the motor force to the torsional bar portion **90** is changed depending on the direction of the motor force. According to the construction of the speed reducer **42**, as shown in FIGS. **11**A and **11**B, each tooth **61** formed in the inner circumferential surface of the ring gear **60** as a first gear has a tooth profile that is asymmetrical with respect to a centerline **61***cl* of the tooth **61** such that a pressure angle measured in one of opposite side portions of each tooth **61** that are located on respective opposite sides of the centerline **61***cl* is different from that measured in the other of the opposite side portions of each tooth **61**. Similarly, each tooth **59** formed in the outer circumferential surface of the flexible gear **58** as a second gear has a tooth profile that is asymmetrical with respect to a centerline **59***cl* of the tooth **59** such that a pressure angle measured in one side portion of each tooth **59** is different from that measured in another side portion of each tooth **59**. FIG. **11**A shows a state in which the motor **40** is rotated in the direction that causes the rotational force to act in the bound direction, while FIG. **11**B shows another state in which the motor **40** is rotated in the direction that causes the rotational force to act in the rebound direction. As is apparent from FIGS. **11**A and **11**B, when the rotational force acts in the bound direction, the meshing of the gears **60**, **58** is achieved by contact of the side portions of the respective teeth **61**, **59** each having the relatively small pressure angle β_B. On the other hand, when the rotational force acts in the rebound direction, the meshing of the gears **60**, **58** is achieved by contact of the side portions of the respective teeth **61**, **59** each having the relatively large pressure angle β_RR. Owing to the actuator-efficiency changing mechanism with such a configurationally asymmetrical arrangement in the teeth **61**, **59** of the gears **60**, **58**, the amount of loss in the transmission of the motor force by the speed reducer **42** is changed depending on the direction of the motor force.

[0068] The negative efficiency η_{NR} (when the motor force acts in the rebound direction) being low provides an advantage in the above-described body-height adjustment control executed in the present stabilizer system **10**. In the execution of the body-height adjustment, the height of the vehicle body is adjusted by causing the stabilizing force to force the wheel **12** and the vehicle body away from each other, so as to avoid or restrain reduction in the vehicle body height, which reduction could be caused by increase in weight of luggage loaded on the vehicle and weight of passenger riding on the vehicle, from a reference state in which the luggage weight and the passenger weight are supposedly minimized. That is, for adjusting the body height, the stabilizing force is directed in the rebound direction so as to act against the external force acting in the bound direction. Since the negative efficiency η_{NR} in the rebound direction is low, as described above, the electric motor **40** requires a relatively small amount of electric power for maintaining the adjusted body height, so that the present stabilizer system **10** is advantageous from a point of view of electric power saving.

[Controls Executed in Stabilizer System]

[0069] As described above, in the present stabilizer system **10**, the four stabilizer devices **20** are controllable independently of each other, for executing the roll reduction control, the pitch reduction control and the body-height adjustment control. It is therefore possible to execute a total stabilizing control incorporating these three controls. In each of the stabilizer devices **20** under the execution of the total stabilizing control, the actuator **32** is controlled based on the roll moment, pitch moment, luggage weight and passenger weight acting on the vehicle body, such that the torsion bar potion **90** of the stabilizer bar **28** is twisted by a suitable amount whereby the stabilizing force is appropriately produced by the stabilizer device **20**. Since the stabilizing force

is dependent on the angular position of the electric motor **40**, the motor **40** is controlled in the execution of the stabilizing control such that an actual angular position of the motor **40** is substantially equalized to a target angular position which is predetermined according to a desired magnitude of the stabilizing force. The direction and magnitude of the stabilizing force are dependent on the direction and magnitude of the rotational force produced by the motor **40**, i.e., an amount of the electric power supplied to the motor **40**. Therefore, the motor **40** is controlled with the electric power being supplied by an appropriate amount.

[0070] The above-described target angular position of the motor **40** is defined as a sum of a roll-reduction component of the target angular position, a pitch-reduction component of the target angular position and a body-height-adjustment component of the target angular position, which are target angular-position components directed to the respective roll reduction, pitch reduction and body-height adjustment controls. In the following description as to the respective roll reduction, pitch reduction and body-height adjustment controls, there will be described a process of determination of the target angular-position component directed to each of the roll reduction, pitch reduction and body-height adjustment controls, and also a process of determination of the amount of the electric power supplied to the motor **40**.

[0071] In the following description, the angular position θ of the electric motor **40** represents an angular amount (that could exceed 360°) by which the motor **40** is deviated from a reference angular position (θ=0°) of the motor **40** in a reference state in which only a driver having a standard weight (e.g., 60 kg) rides on a vehicle that is stationary on a flat road. A positive (+) value of the angular position θ means that the motor **40** is rotated from the reference angular position in the direction that causes the rotational force to act in the rebound direction, while a negative (−) value of the angular position Θ means that the motor **40** is rotated from the reference angular position in the direction that causes the rotational force to act in the bound direction. It is noted that the front stabilizer devices **20**FR, **20**FL provided in the front wheels **12**FR, **12**FL and the rear stabilizer devices **20**RR, **20**RL provided in the rear wheels **12**RR, **12**RL are slightly different with respect to the magnitude of the stabilizing force (that is to be produced) and the target angular position, because there is a difference between the front wheels **12**FR, **12**FL and the rear wheels **12**RR, **12**RL with respect to the load acting thereon and the rigidity of the suspension spring **86** provided thereto. However, in the following description, the difference between the front and rear stabilizer devices **12** is ignored in the interest of simplification of the description.

(i) Roll Reduction Control

[0072] In the roll reduction control, the roll-reduction component θ^*_R of the target angular position of the motor **40** is determined based on the lateral acceleration serving as an index of the roll moment acting on the vehicle body. Described in detail, a parameter value Gy* of the lateral acceleration (that is used as a parameter in the control) is determined, on the basis of an estimated value Gyc of the lateral acceleration estimated based on the operating angle δ of the steering wheel and the running speed v of the vehicle and also a measured value Gyr of the lateral acceleration, and according to the following expression:

$$Gy^*=K_A \cdot Gyc+K_B \cdot Gyr \quad (1),$$

where "K_A", "$_K$B" represents gains.

[0073] The roll-reduction component θ^*_R of the target angular position is determined based on the lateral acceleration parameter value Gy* that is determined as described above. The stabilizer ECU **150** stores a data map indicative of relationship between the roll-reduction component θ^*_R of the target angular position and the lateral acceleration parameter value Gy*, so that the roll-reduction component θ^*_R can be determined with reference to the data map, which is conceptually shown in FIG. **12**. In FIG. **12**, solid line corresponds to each of the stabilizer devices **20**FL, **20**RL provided in the left wheels **12**FL, **12**RL, while broken line corresponds to each of the stabilizer devices **20**FR, **20**RR provided in the right wheels **12**FR, **12**RR. Generally, the lateral acceleration parameter value Gy* is positive when the vehicle turns left, and is negative when the vehicle turns right. For example, during a left turn of the vehicle, for reducing the roll of the vehicle body, the roll-reduction component θ^*_R of the target angular position of each of the stabilizer devices **20**FL, **20**RL provided for the left wheels **12**FL, **12**RL as inside wheels is determined (as indicated in solid line of FIG. **12**) for causing each of the inside wheels **12**FL, **12**RL to be bounded by a suitable amount, while the roll-reduction component θ^*_R of the target angular position of each of the stabilizer devices **20**FR, **20**RR provided for the right wheels **12**FR, **12**RR as outside wheels is determined (as indicated in broken line of FIG. **12**) for causing each of the outside wheels **12**FR, **12**RR to be rebounded by a suitable amount. Where the lateral acceleration parameter value Gy* is a value GY^*_A as indicated in FIG. **12**, an absolute value of the roll-reduction component θ^*_{RN} of the target angular position of each of the stabilizer devices **20**FL, **20**RL provided for the left wheels **12**FL, **12**RL is larger than an absolute value of the roll-reduction component θ^*_{RG} of the target angular position of each of the stabilizer devices **20**FR, **20**RR provided for the right wheels **12**FR, **12**RR ($|\theta^*_{RN}|>|\theta^*_{RG}|$). During a right turn of the vehicle, where the lateral acceleration parameter value Gy* is a negative value $-Gy^*_A$ as indicated in FIG. **12**, the absolute value of the roll-reduction component θ^*_{RN} of the target angular position of each of the stabilizer devices **20**FR, **20**RR provided for the right wheels **12**FR, **12**RR is larger than an absolute value of the roll-reduction component θ^*_{RG} of the target angular position of each of the stabilizer devices **20**FL, **20**RL provided for the left wheels **12**FL, **12**RL ($|\theta^*_{RN}|>|\theta^*_{RG}|$). That is, in the roll reduction control, the magnitude of the stabilizing force produced by each of the inside wheels **12** and acting in the bound direction is larger than the magnitude of the stabilizing force produced by each of the outside wheels **12** and acting in the rebound direction, so that lifting of an inside portion of the vehicle body is restrained and the position of center of gravity is-lowered whereby stability of the vehicle during cornering is improved.

(ii) Pitch Reduction Control

[0074] In the pitch reduction control, the pitch-reduction component θ^*_P of the target angular position of the motor **40** is determined based on the longitudinal acceleration serving as an index of the pitch moment acting on the vehicle body. The pitch-reduction component θ^*_P of the target angular position is determined based on a measured value Gzg of the longitudinal acceleration. The stabilizer ECU **150** stores a data map indicative of relationship between the pitch-reduction component θ^*_P of the target angular position and the measured longitudinal acceleration value Gzg, so that the pitch-reduction component θ^*_P can be determined with reference to the data map, which is conceptually shown in FIG. **13**. In FIG. **13**, solid line corresponds to each of the stabilizer devices **20**FR, **20**FL provided in the front wheels **12**FR,

12FL, while broken line corresponds to each of the stabilizer devices **20RR**, **20RL** provided in the rear wheels **12RR**, **12RL**. Generally, the measured longitudinal acceleration value Gzg is positive when there is a rear-end squad of the vehicle body, for example, in acceleration of the vehicle upon starting, and is negative when there is a front-end dive of the vehicle body, for example, in deceleration of the vehicle upon braking. During abrupt acceleration of the vehicle, for reducing the rear-end squat of the vehicle body, the pitch-reduction component θ^*_P of the target angular position of each of the stabilizer devices **20FR**, **20FL** provided for the front wheels **12FR**, **12FL** is determined (as indicated in solid line of FIG. **13**) for causing each of the front wheels **12FR**, **12FL** to be bounded by a suitable amount, while the pitch-reduction component θ^*_P of the target angular position of each of the stabilizer devices **20RR**, **20RL** provided for the rear wheels **12RR**, **12RL** is determined (as indicated in broken line of FIG. **13**) for causing each of the rear wheels **12RR**, **12RL** to be rebounded by a suitable amount. On the other hand, during abrupt deceleration of the vehicle, for reducing the front-end dive of the vehicle body, the pitch-reduction component θ^*_P of the target angular position of each of the stabilizer devices **20FR**, **20FL** provided for the front wheels **12FR**, **12FL** is determined (as indicated in solid line of FIG. **13**) for causing each of the front wheels **12FR**, **12FL** to be rebounded by a suitable amount, while the pitch-reduction component θ^*_P of the target angular position of each of the stabilizer devices **20RR**, **20RL** provided for the rear wheels **12RR**, **12RL** is determined (as indicated in broken line of FIG. **13**) for causing each of the rear wheels **12RR**, **12RL** to be bounded by a suitable amount.

(iii) Body-Height Adjustment Control

[0075] In the body-height adjustment control, the body-height-adjustment component θ^*_H of the target angular position of the motor **40** is determined based on a distance between the wheel **12** and the vehicle body, which distance serves as an index of the luggage weight and the passenger weight. Described in detail, an actual distance L between the wheel **12** and the vehicle body is detected by the stroke sensor **163**, and a deviation ΔL of the actual distance L from a predetermined distance L* is calculated. The predetermined distance L* is a distance between the wheel **12** and the vehicle body in the above-described reference state. The body-height-adjustment component θ^*_H of the target angular position is determined based on the distance deviation ΔL. The stabilizer ECU **150** stores a data map indicative of relationship between the body-height-adjustment component θ^*_H of the target angular position and the distance deviation ΔL, so that the body-height-adjustment component θ^*_H can be determined with reference to the data map. Since the reference state is a state in which the luggage weight and the passenger weight are supposedly minimized, as described above, the stabilizing force is commonly directed to increase the vehicle body height, and the body-height-adjustment component θ^*_H is a positive (+) for causing the rotational force to act in the rebound direction.

(iv) Determination of Electric Power Supplied to Motor

[0076] The target angular position θ* of the electric motor **40** is obtained as the total of the roll-reduction component θ^*_R, pitch-reduction component θ^*_P and body-height-adjustment component θ^*_H which are obtained as described above. In control of the motor **40**, which is made generally based on the target angular position θ* of the motor **40**, the electric power that is to be supplied to the motor **40** is determined based on the target angular position θ* of the motor **40** and also a deviation Δθ (=θ*−θ) of an actual angular position θ of the motor **40** from the target angular position θ* of the motor **40**. The determination of the supplied electric power is determined based on the angular position deviation Δθ obtained by comparing the target angular position θ* with the actual angular position θ that is fed back from the angular position sensor **55**. In the present embodiment, a target electric current i* that is to be supplied to the motor **40** is determined. Described specifically, the angular position deviation Δθ of the motor **40** is first obtained, and then the target electric current i* is determined on the basis of the obtained angular position deviation Δθ and according to the following expression:

$$i^*=K_1\cdot\Delta\theta+K_2\theta^* \quad (2),$$

where "K_1", "K_2" represent first and second gains, respectively.

[0077] In the above expression (2), each of the first gain K_1 and the second gain K_2 varies depending on conditions as described below. The direction of the rotational force produced by the electric motor **40** varies depending on whether the target electric current i* is a positive value or a negative value. In this sense, the target electric current i* represents the direction of the rotational force as well as the magnitude of the rotational force. A left side of the above expression consists of two terms that can be considered to be components of the target electric power. The component of the first term is a component based on the angular position deviation Δθ, while the component of the second term is a component based on the target angular position θ*. The angular position deviation Δθ represents an amount and a direction by and in which the motor **40** is to be rotated for causing the actual angular position θ to be equalized to the target angular position θ*. An absolute value of the angular position deviation Δθ indicates the amount by which the motor **40** is to be rotated. Whether the angular position deviation Δθ is a positive value or a negative value indicates the direction in which the motor **40** is to be rotated. That is, it can be said that the angular-position-deviation-based component is a component required to cause the motor **40** to be rotated against the external force, namely, is a component of the motor force required to cause the actuator **32** to actuate against the external force. On the other hand, it can be said the target-angular-position-based component is a component required to inhibit the motor **40** from being rotated by the external force, namely, is a component of the motor force required to maintain an operating position of the actuator **32**. In general, the stabilizing force is not required for maintaining the above-described reference state. However, when the vehicle is in a non-reference state as a result of application of the external force such as elasticity of the suspension spring **48**, roll moment, pitch moment and static load of the vehicle body, the stabilizing force whose magnitude corresponds to deviation from the reference state is required to maintain the non-reference state. Thus, the electric current whose amount corresponds to deviation of the target angular position θ* from the reference angular position has to be continuously supplied to the motor **40**. In view of this, the target electric current i* is determined based on the sum of the angular-position-deviation-based component and the target-angular-position-based component, rather than based on only the angular-position-deviation-based component.

[0078] In view of the actuator efficiency as discussed above, since the target-angular-position-based component may be merely a component for maintaining the angular position θ of the motor **40**, the amount of the target-angular-position-based component may be dependent on the negative efficiency η_N. Therefore, in the above expression (2) for determining the target electric current i*, the second gain K_2 in the second term may be determined such that the amount of the target-angular-position-based component is according to the characteristic of the negative efficiency η_N. On the other hand, the angular-position-deviation-based component has to be a component required for rotating the motor **40** in presence of the external force. In view of a possible case that a distance of the target angular position θ* from the reference angular position (θ=0°) is larger than a distance of the actual angular position **0** from the reference angular position (θ=0°), there is a requirement that the amount of the angular-position-deviation-based component has to cause the sum of the two components to exceed the positive efficiency η_P. Therefore, in the above expression (2), the first gain K_1 in the first term has to be determined such that the above requirement is satisfied.

[0079] However, as described above, according to the actuator efficiency of the present stabilizer system **10**, the positive efficiency η_P and the negative efficiency η_N are both relatively low, when the stabilizing force acts in the rebound direction, namely, when the motor **40** is rotated in the direction that causes the rotational force to act in the rebound direction. The positive efficiency η_P and the negative efficiency η_N are both relatively high, when the stabilizing force acts in the bound direction, namely, when the motor **40** is rotated in the direction that causes the rotational force to act in the bound direction. Thus, in the present stabilizer system **10**, the first gain K_1 is changed depending on whether the angular position deviation Δθ is a positive value or a negative value. Specifically described, when the angular position deviation Δθ is a positive value, the actuator **32** has to be actuated by causing the motor **40** to produce the rotational force acting in the rebound direction. When the angular position deviation Δθ is a negative value, the actuator **32** may be actuated by causing the motor **40** to produce the rotational force acting in the bound direction. Thus, when the angular position deviation Δθ is not smaller than zero ("0"), the first gain K_1 is provided by $K_{1(H)}$. When the angular position deviation Δθ is smaller than zero ("0"), the first gain K_1 is provided by $K_{1(L)}$ ($<K_{1(H)}$). Meanwhile, the second gain K_2 is changed depending on whether the target angular position θ* is a positive value or a negative value. Specifically described, when the target angular position θ* is a positive value, the operating position of the actuator **32** may be maintained by causing the motor **40** to produce the rotational force acting in the rebound direction. When the target angular position θ* is a negative value, the operating position of the actuator **32** has to be maintained by causing the motor **40** to produce the rotational force acting in the bound direction. Thus, when the target angular position θ* is not smaller than zero ("0"), the second gain K_2 is provided by $K_{2(L)}$. When the target angular position θ* is smaller than zero ("0"), the second gain K_2 is provided by $K_{2(H)}$ ($>K_{2(L)}$).

[0080] After the target electric current i* has been determined according to the above expression (2) by changing the first and second gains K_1, K_2, the inverter **132** receives a command indicative of the direction of the motor force that is dependent on whether the target electric current i* is a positive value or a negative value and another command indicative of a duty ratio that is dependent on an absolute value of the target electric current i*, which are supplied from the stabilizer ECU **150**, so that the actuation of the actuator **32**, i.e., the operation of the stabilizer device **20** is controlled under control of the inverter **132**.

[0081] In the execution of the total stabilizing control, the roll reduction control and the pitch reduction control are executed upon cornering, abrupt acceleration and abrupt deceleration of the vehicle each of which is occurred during ordinary running of the vehicle, while the body-height adjustment control is executed as needed. The body-height adjustment control often requires to be executed somewhat continuously or permanently. Therefore, in general, the body-height adjustment control is executed for a larger length of time than the roll reduction control and the pitch reduction control. Since the stabilizing force is directed mainly in the rebound direction during the execution of the body-height adjustment control, as described above, the second gain K_2 of the target-angular-position-based component (serving as a component for maintaining the vehicle body height for a large length of time) can be provided by a small value. Thus, the present stabilizer system **10** is advantageous from a point of view of electric power saving, in spite of execution of the body-height adjustment control.

[Stabilizing Control Routine Program]

[0082] The above-described total stabilizing control is executed by the stabilizer ECU **150**, in accordance with a stabilizing control routine program illustrated in a flow chart of FIG. **14**. This stabilizing control routine program is repeatedly executed at a short time interval (e.g., several tens of milliseconds), while an ignition switch of the vehicle is placed in its ON state. Hereinafter, the stabilizing control routine program will be described in detail by reference to the flow chart of FIG. **14**.

[0083] The stabilizing control routine program is initiated with a step S1 of determining whether a roll of the vehicle body occurs. This determination is made based on values detected by the operating angle sensor **152** and the running speed sensor **154**, since the roll occurs upon turning of the vehicle. Specifically, it is determined that the roll of the vehicle body will be caused or is being actually caused due to cornering of the vehicle, when the operating angle of the steering wheel is not smaller than a threshold and the running speed of the vehicle is not smaller than a threshold. If an affirmative decision is obtained in step S1, the control flow goes to step S2 that is implemented to obtain the roll-reduction component θ^*_R of the target angular position, as described above, for executing the roll reduction control.

[0084] Then, step S3 is implemented to determine whether a pitch of the vehicle body occurs. The pitch of the vehicle body can be categorized into a front-end dive that occurs upon deceleration of the vehicle, and a rear-end squat that occurs upon acceleration of the vehicle. Therefore, the determination is made based on values detected by the longitudinal acceleration sensor **158**, the throttle sensor **160** and the brake pressure sensor **162**, so as to see if the dive or squat whose degree exceeds a permissible maximum degree occurs. Specifically, it is determined that the dive of the vehicle body will be caused or is being actually caused, when an absolute value of the longitudinal acceleration is not smaller than a threshold and the brake pressure is not smaller than a threshold. Further, it is determined that the squat of the vehicle body will be caused or is being actually caused, when an absolute value of the longitudinal acceleration is not smaller than a threshold and the opening angle of the throttle valve is not smaller than a threshold. If an affirmative decision is obtained in step S3, the control flow goes to step S4 that is implemented to obtain the pitch-reduction component θ^*_P of the target angular position, as described above, for executing the pitch reduction control.

[0085] Then, step S5 is implemented to determine whether the weight of the luggage and passenger acting on the vehicle body is changed. Specifically, this determination is made using output signals supplied from the ignition switch, the door sensor **164** that is provided in each door of the vehicle and the stroke sensor **163** that is provided to detect the distance between the wheel **12** and the vehicle body. It is determined that there is a possibility of change in the luggage and passenger weight, when it is assumed that the luggage and passenger have been increased or reduced, namely, immediately after placement of the ignition switch into its ON state, or upon detection of closing of at least one door of the vehicle after its opening. If it is determined that there is the possibility of the weight change, the deviation ΔL of the distance L between the corresponding wheel **12** and the vehicle body is obtained based on the value detected by the stroke sensor **163**. That is, in step S5, it is determined whether the weight acting on the vehicle body is changed, by comparing the currently obtained deviation ΔL with the last obtained deviation ΔL, namely, by seeing if the deviation ΔL has been substantially changed. If an affirmative decision is obtained in step S5, the control flow goes to step S6 that is implemented to change the body-height-adjustment component θ^* of the target angular position of the motor **40**. In step S6, an amount of the body-height-adjustment component θ^*_H is newly obtained, and the newly obtained amount of the body-height-adjustment component θ^*_H replaces an amount of the body-height-adjustment component θ^*_H that had been last obtained and stored in the stabilizer ECU **150**. The newly obtained amount of the body-height-adjustment component θ^*_H is stored until implementation of step S6 in the next cycle of execution of the routine program.

[0086] Next, step S7 is implemented to determine the target angular position θ^* of the motor **40**, by adding the roll-reduction component θ^*_R, pitch-reduction component θ^*_P and body-height-adjustment component θ^*_H. Step S7 is followed by steps S8 and S9 in which the actual angular position θ is obtained and then the angular position deviation $\Delta\theta$ is calculated based on the target angular position θ^* and the actual angular position θ. Then, step S10 is implemented to determine whether the angular position deviation $\Delta\theta$ is equal to or larger than zero ("0"). If an affirmative decision is obtained in step S10, the control flow goes to step S11 in which the first gain K_1 is set at $K_{1(H)}$. If a negative decision is obtained in step S10, the control flow goes to step S12 in which the first gain K_1 is set at $K_{1(L)}$. Step S11 or step S12 is followed by step S13 that is implemented to determine whether the target angular position θ^* is equal to or larger than zero ("0"). If an affirmative decision is obtained in step S13, the control flow goes to step S14 in which the second gain K_2 is set at $K_{2(L)}$. If a negative decision is obtained in step S13, the control flow goes to step S15 in which the second gain K_2 is set at $K_{2(H)}$. Step S14 or step S15 is followed by step S16 that is implemented to determine the target electric current i^*, based on the first and second gains K_1, K_2, according to the above expression (2). One cycle of execution of the stabilizing control routine program of FIG. **14** is completed with step S17 that is implemented to supply the command indicative of the direction of the motor force (that is dependent on whether the target electric current i^* is a positive value or a negative value) and the command indicative of the duty ratio (that is dependent on an absolute value of the target electric current i^*) to the inverter **132**.

(B) Second Embodiment

[0087] Referring next to FIGS. **15-18**, there will be described a vehicle stabilizer system **180** constructed according to a second embodiment of the invention. In this vehicle stabilizer system **180**, the pitch reduction control and the body-height adjustment control are executed although the roll reduction control is not executed. In the following description, the same reference signs as used in the first embodiment will be used to identify the functionally corresponding elements, and redundant description of these elements is not provided.

[0088] The stabilizer system **180** includes a pair of stabilizer devices **182**, one of which is provided for the front wheels **12FR**, **12FL** and the other of which is provided for the rear wheels **12RR**, **12RL**. Each of the stabilizer devices **182** includes a stabilizer bar **184**, an actuator **186** operable to rotate the stabilizer bar **184**, and a pair of link rods **188**. The stabilizer bar **184** is connected at its axially opposite end portions to the respective right and left suspension devices **36** via the respective link rods **34**, and is connected at its axially intermediate portion to the actuator **186**. As is apparent from FIG. **15**, the stabilizer device **182** and stabilizer bar **184** are provided for each of the front pair of wheels **12F** and rear pair of wheels **12R**. In the following description, each of the stabilizer device **182** and stabilizer bar **184** is referred together with one of reference signs F, R indicative of the respective front and rear pairs of wheels, where it should be clarified which one of the front and rear pairs of wheels the referred device or component corresponds to.

[0089] As shown in FIG. **16**, the actuator **186** includes a generally cylindrical-shaped housing **192** fixedly attached to the vehicle body through a pair of attachment members **194** that are provided in an outer circumferential surface of the housing **192**. The actuator **186** further includes the electric motor **40** and the speed reducer **42** disposed within the housing **192**. The stabilizer bar **184** is connected to the actuator **186**, while extending through the hollow motor shaft **52** of the motor **40**, i.e., through the actuator **186**. Specifically described, the stabilizer bar **184** includes a pair of stabilizer bar members **196** and a connecting pipe **200** which interconnects the stabilizer bar members **196** and which extends through the hollow motor shaft **52**. The stabilizer bar members **196** are introduced into the housing **192** through respective opposite end portions of the housing **192**, and introduced into the connection pipe **200** through respective opposite end portions of the pipe **200**. An axial end portion of each of the stabilizing bar members **196** is located within the connection pipe **200**, and is serrated in its outer circumferential surface so as to be held in engagement with an inner circumferential surface of an axially intermediate portion of the connection pipe **200** that is also serrated. Owing to the serration engagement, each of the stabilizing bar members **196** and the connection pipe **200** are connected to each other, and are unrotatable and axially unmovable relative to each other. An axial end portion of the connection pipe **200** is serrated in its outer circumferential surface so as to be held in serration engagement with the inner-circumferential surface of the hole formed through the bottom wall of the cup-shaped flexible gear **58** that is also serrated, whereby the connection pipe **200** and the flexible gear **58** are connected to each other, unrotatably and axially unmovably relative to each other. Another axial end portion of the connection pipe **200** is rotatably held by the housing **192** through a bearing bushing **210**. Annular dumper members **202**, **204** each made of a rubber are fixed to respective opposite end portions of an inner circumferential surface of the connection pipe **200**. An annular sealing boot **206** is provided in an end portion of the housing **192**. It is

noted that, in this second embodiment, the flexible gear **58** serves as an output portion of the speed reducer **42**.

[0090] FIG. **17** is a view of the stabilizer device **182**, suspension devices **36** and right and left wheels **12**, as seen from an upper side of the vehicle. The stabilizer bar **184** of the stabilizer device **182** includes a torsion bar portion **210** which extends substantially in the lateral direction of the vehicle, and a pair of arm portions **212** which are contiguous to respective opposite end portions of the torsion bar portion **210** and which extend in a direction not parallel to the torsion bar portion **210**, e.g., substantially in the forward direction of the vehicle. That is, the torsion bar portion **210** includes the connection pipe **200** and portions of the respective stabilizer bar members **196** that extend substantially in the widthwise or lateral direction of the vehicle. The torsion bar portion **210** of the stabilizer bar **184** is rotatably held, at its portions that are close to the respective arm portions **212**, by a pair of retainers **94** that are fixed to the vehicle body. The actuator **186** is fixed through the above-described attachment **194** to a widthwise central portion of the vehicle body. Each of the arm portions **212** of the stabilizer bar **184** is connected at one of its longitudinal end portions (that is remote from the torsion bar portion **210**) to the second lower arm **78** of a corresponding one of the right and left suspension devices **36** via a corresponding one of the link rods **188**. Like the link rod **34** of each stabilizer device **20** in the first embodiment, each of the link rods **188** that is connected to the second lower arm **78** of a corresponding one of the suspension devices **36** is inclined with respect to the second lower arm **78**. Described more specifically, each of the link rods **188F** is connected at its suspension-arm connection end portion to a corresponding one of the second lower arms **78FR**, **78FL** of the front suspension devices **36FR**, **36FL** with inclination of each link rod **34** with respect to the corresponding second lower arm **78** such that the suspension-arm connection end portion of each link rod **34** is located on inside of another end portion of each link rod **34** in the lateral direction of the vehicle, like the link rod **34** in the first embodiment (see FIG. **5**). Meanwhile, each of the link rods **188R** is connected at its suspension-arm connection end portion to a corresponding one of the second lower arms **78RR**, **78RL** of the rear suspension devices **36RR**, **36RL** with inclination of each link rod **34** with respect to the corresponding second lower arm **78** such that the suspension-arm connection end portion of each link rod **34** is located on outside of another end portion of each link rod **34** in the lateral direction of the vehicle, like the link rod **34** in the first embodiment (see FIG. **6**).

[0091] In the stabilizer system **180** of this second embodiment, although an active roll reduction control is not executed, the stabilizer bar **184** of the stabilizer device **182** functions substantially in the same manner as a conventional stabilizer bar, during turning of the vehicle. Described in detail, the torsion bar portion **210** is twisted by the roll of the vehicle body, and the roll of the vehicle body is restrained or reduced owing to the stabilizing force dependent on a reaction that is generated as a result of twisting or torsion of the torsion bar portion **210**. The stabilizer bar **184** thus restrains displacement of the wheel **12** and the vehicle body toward or away from each other, which displacement results from turning of the vehicle. This leads to reduction in the understeer tendency as the cornering characteristic that is dependent on the above-described suspension geometry. However, in the stabilizer device **182** in the present second embodiment, owing to the inclination of each link rod **188** as described above, a part of the stabilizing force produced by the stabilizer device **182** acts on the second lower arm **78** in the axial direction of the second lower arm **78**, namely, an axial force as a component of the stabilizing force acts on the second lower arm **78**. Thus, each of the suspension devices **36** is given compliance by which the toe and camber angles of each wheel **12** is changed depending on the direction of the axial force acting on the second lower arm **78** of a corresponding one of the suspension devices **36**, so that the understeer tendency is increased by the axial force acting on the second lower arm **78** of each suspension device **36**. Therefore, by employing the present stabilizer system **180**, it is possible to maintain the understeer tendency as the cornering characteristic of the vehicle, while satisfactorily reducing the roll of the vehicle body without executing the active roll reduction control.

[0092] Further, in each of the stabilizer devices **182** in the present second embodiment, the actuator **186** enables the stabilizer bar **184** to generate the right stabilizing force forcing the right wheel **12R** and the vehicle body and the left stabilizing force forcing the left wheel **12L** and the vehicle body, such that the right and left stabilizing forces both act in the same one of the bound and rebound directions. Further, in the stabilizer system **180** of the present second embodiment, the two stabilizing devices **182** are controllable independently of each other. That is, the stabilizing forces produced by the respective stabilizer devices **182** are controlled independently of each other, for executing the pitch reduction control for reducing pitch of the vehicle body, and the body-height adjustment control for adjusting the vehicle body height from a road surface.

[0093] Further, like the actuator **32** in the first embodiment, the actuator **186** includes the actuator-efficiency changing mechanism arranged to change the actuator efficiency depending on the direction of the motor force. According to the construction of the speed reducer **42** of the actuator **186** providing the actuator-efficiency changing mechanism, the meshing of the gears **60**, **58** is achieved by contact of the side portions of the respective teeth **61**, **59** each having the relatively small pressure angle PB during application of the motor force in the bound direction, and the meshing of the gears **60**, **58** is achieved by contact of the side portions of the respective teeth **61**, **59** each having the relatively large pressure angle OR during application of the motor force in the rebound direction, as in the first embodiment (see FIGS. **11A**, **11B**). That is, the positive efficiency η_P and the negative efficiency η_N are both lower when the stabilizing force acts in the rebound direction than those when the stabilizing force acts in the bound direction. Therefore, as in the first embodiment, in the execution of the body-height adjustment control, the electric motor **40** requires a relatively small amount of electric power for maintaining the adjusted body height, so that the present stabilizer system **180** is advantageous from a point of view of electric power saving.

[0094] In the present stabilizer system **180** in which the pitch reduction control and the body-height adjustment control are executable, it is possible to execute a total stabilizing control incorporating these two controls. This total stabilizing control is executed by the stabilizer ECU **150**, in accordance with a stabilizing control routine program illustrated in a flow chart of FIG. **18**. The stabilizing control routine program of FIG. **18** is repeatedly executed at a short time interval (e.g., several tens of milliseconds), while the ignition switch of the vehicle is placed in its ON state. Since the pitch reduction control and the body-height adjustment control are executed

in substantially the same manner as those in the first embodiment, redundant description of these controls is not provided in the following description with reference to the flow chart of FIG. **18**. It is noted that, in the total stabilizing control in the present second embodiment, the stabilizing devices **182** provided for the front pair of wheels **12F** and rear pair of wheels **12R** are controlled independently of each other.

[0095] The stabilizing control routine program of FIG. **18** is initiated with a step **S11** of determining whether a pitch of the vehicle body occurs. If an affirmative decision is obtained in step **S11**, the control flow goes to step **S12** that is implemented to obtain the pitch-reduction component θ^*_P of the target angular position, for executing the pitch reduction control. Then, step **S13** is implemented to determine whether the weight of the luggage and passenger acting on the vehicle body is changed. In the determination in step **S5** of the stabilizing control routine program of FIG. **14** in the first embodiment, the determination is made based on the deviation ΔL of the actual distance L between the corresponding wheel **12** and the vehicle body from a predetermined distance L^*. However, in the determination in step **S13** of the stabilizing control routine program of FIG. **18**, the determination is made based on a deviation ΔL of an average of the actual distance L between the right wheel **12R** and the vehicle body and the actual distance L between the left wheel **12L** and the vehicle body, from a predetermined distance L^*. Next, step **S15** is implemented to determine the target angular position θ^* of the motor **40**, by adding the pitch-reduction component θ^*_P and body-height-adjustment component θ^*_H. The subsequent steps **S16-S25** are implemented in the same manner as the steps **S8-S17** of the stabilizing control routine program of FIG. **14** in the first embodiment. One cycle of execution of the stabilizing control routine program of FIG. **18** is completed with step **S25**.

1. A stabilizer system for a vehicle, comprising:

(a) a stabilizer bar including (a-1) a torsion bar portion, and (a-2) an arm portion that extends in a direction not parallel to said torsion bar portion, from said torsion bar portion toward a wheel of the vehicle; and

(b) an actuator including (b-1) a motor, and (b-2) a speed reducer that reduces a speed of said motor while transmitting a force of said motor to said torsion bar portion of said stabilizer bar,

wherein said stabilizer bar generates a stabilizing force which is dependent on a reaction that is generated as a result of torsion of said torsion bar portion, and which forces the wheel and the body of the vehicle in a selected one of a direction toward each other and a direction away from each other,

wherein said actuator allows said stabilizer bar to generate the stabilizing force whose magnitude is dependent on a magnitude of the force of said motor and is changeable depending on an amount of rotation of said torsion bar portion,

and wherein said actuator includes an actuator-efficiency changing mechanism changing a negative efficiency of said actuator, depending on a direction of the force of said motor, said reverse efficiency corresponding to a ratio of the magnitude of the force of said motor minimally required to inhibit said motor from being moved by an external force that acts on said stabilizer bar, to an magnitude of the external force.

2. The stabilizer system according to claim **1**, wherein said actuator-efficiency changing mechanism is provided by a construction of said speed reducer by which an amount of loss in transmission of the force of said motor to said torsion bar portion is changed depending on the direction of the force of said motor.

3. The stabilizer system according to claim **1**,

wherein said speed reducer includes a first gear and a second gear which mesh with each other, and which are rotated relative to each other by operation of said motor,

wherein said second gear is connected to said torsion bar portion,

and wherein said actuator-efficiency changing mechanism is provided by a construction of said speed reducer in which each tooth of at least one of said first and second gears has a tooth profile that is asymmetrical with respect to a centerline of each tooth such that a pressure angle measured in one of opposite side portions of each tooth that are located on respective opposite sides of the centerline is different from that measured in the other of said opposite side portions of each tooth.

4. The stabilizer system according to claim **1**, wherein said actuator-efficiency changing mechanism changes said reverse efficiency of said actuator, such that said reverse efficiency is smaller when the direction of the force of said motor causes the stabilizing force to force the wheel and the body of the vehicle in the direction away from each other, than when the direction of the force of said motor causes the stabilizing force to force the wheel and the body of the vehicle in the direction toward each other.

5. The stabilizer system according to claim **1**, wherein said speed reducer is a harmonic gear set.

6. The stabilizer system according to claim **1**, comprising:

a pair of stabilizer bars each of which is provided by said stabilizer bar; and

a pair of actuators each of which is provided by said actuator,

wherein said arm portion of each of said pair of stabilizer bars extends toward a corresponding one of right and left wheels as said wheel of the vehicle,

and wherein said torsion bar portion of each of said pair of stabilizer bars is connected, at one of axially opposite end portions thereof that is remote from said arm portion of said each of said pair of stabilizer bars, to said speed reducer of a corresponding one of said pair of actuators.

7. The stabilizer system according to claim **1**,

wherein said stabilizer bar includes a pair of arm portions each of which is provided by said arm portion,

wherein said pair of arm portions extend from axially opposite ends of said torsion bar portion toward respective right and left wheels each as said wheel of the vehicle,

and wherein said torsion bar portion is connected, at an axially intermediate portion thereof, to said speed reducer of said actuator.

* * * * *

WORLD INTELLECTUAL PROPERTY ORGANIZATION
IP SERVICES

Search result: 1 of 1

(WO/2001/063147) ECCENTRIC GEAR

Biblio. Data | Description | Claims | National Phase | Notices | Documents

Latest bibliographic data on file with the International Bureau

Pub. No.: WO/2001/063147
Publication Date: 30.08.2001
Chapter 2 Demand Filed: 24.08.2001
International Application No.: PCT/SE2001/000118
International Filing Date: 24.01.2001

IPC: *F16H 1/32* (2006.01)

Applicants: **SCANDRIVE CONTROL AB** [SE/SE]; Box 3 S-730 40 Kolbäck (SE) *(All Except US)*.
RILBE, Ulf [SE/SE]; (SE) *(US Only)*.

Inventor: **RILBE, Ulf**; (SE).

Agent: **JOHANSSON, Lars**; Lars Johansson Patentbyrå AB Box 68 S-801 02 Gävle (SE).

Priority Data: 0000571-0 22.02.2000 SE

Title: ECCENTRIC GEAR

Abstract: The invention relates to an eccentric gear for providing a speed difference between two machine elements (3, 4) which are rotatably journalled in relation to a reference member (2) and individually rotatable around a symmetry axis (C). The gear includes two pairs of co-operating gear rims (6, 7; 8, 9), one of which in each pair is eccentric in relation to the symmetry axis (C) and one of which is in the form of a male gear rim (6, 8) formed with out-turned teeth, and the other one (7, 9) is in the form of a female gear rim formed with in-turned teeth, which has a larger diameter than the appurtenant male gear rim (6, 7) in order to enable engagement of only a few of the teeth of the male gear rim in the female gear rim, one of the gear rims being arranged to roll off against the other one. According to the invention, one of the gear rims, e.g. the male gear rim, in each pair of co-operating gear rims is rigidly connected to a homologous gear rim in the other pair of gear rims and situated along a geometric axis (X) common for these two gear rims, which axis is eccentric and preferably oblique in relation to the symmetry axis (C) while the other gear rims are rotatable in relation to each other.

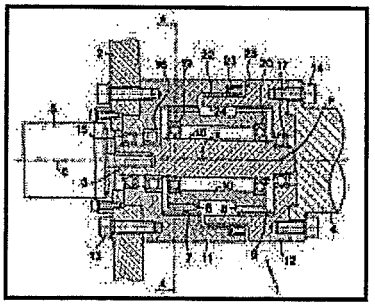

Designated States: AE, AG, AL, AM, AT, AU, AZ, BA, BB, BG, BR, BY, BZ, CA, CH, CN, CR, CU, CZ, DE, DK, DM, DZ, EE, ES, FI, GB, GD, GE, GH, GM, HR, HU, ID, IL, IN, IS, JP, KE, KG, KP, KR, KZ, LC, LK, LR, LS, LT, LU, LV, MA, MD, MG, MK, MN, MW, MX, MZ, NO, NZ, PL, PT, RO, RU, SD, SE, SG, SI, SK, SL, TJ, TM, TR, TT, TZ, UA, UG, US, UZ, VN, YU, ZA, ZW.
African Regional Intellectual Property Org. (ARIPO) (GH, GM, KE, LS, MW, MZ, SD, SL, SZ, TZ, UG, ZW)
Eurasian Patent Organization (EAPO) (AM, AZ, BY, KG, KZ, MD, RU, TJ, TM)
European Patent Office (EPO) (AT, BE, CH, CY, DE, DK, ES, FI, FR, GB, GR, IE, IT, LU, MC, NL, PT, SE, TR)
African Intellectual Property Organization (OAPI) (BF, BJ, CF, CG, CI, CM, GA, GN, GW, ML, MR, NE, SN, TD, TG).

Publication Language: English (EN)
Filing Language: English (EN)

HD 0196

WORLD INTELLECTUAL PROPERTY ORGANIZATION IP SERVICES

Home IP Services PATENTSCOPE® Patent Search

Search result: 1 of 1

(WO/2001/063147) ECCENTRIC GEAR

Biblio. Data | Description | Claims | National Phase | Notices | Documents

Note: OCR Text

ECCENTRIC GEAR Technical Field of the Invention This invention relates to an eccentric gear for pro- viding a speed difference between two machine elements which are rotatably mounted in relation to a reference member and individually rotatable around a common geometrical symmetry axis, including a pair of co-operating gear rims, one of which is eccentric in relation to the symmetry axis and one of which is in the form of a male-like gear rim formed with out-turned teeth, and the other one is in the form of a female-like gear rim which is formed with in-turned teeth and has a larger di- ameter than the male gear rim in order to enable engagement of only one or a few of the teeth of the male gear rim in the fe- male gear rim, one of the gear rims being arranged to roll off against the other one.

Prior Art In comparison to planetary gears, eccentric gears have a plurality of fundamental advantages. Eccentric gears en- able, above all, a high gear change in one single step, at the same time as the same have servo-technically favourable proper- ties, such as limited play, large torsional stiffness as well as a low moment of inertia of the input shaft of the gear.

Different forms of eccentric gears are previously known, e. g. by EP 345 276 (SE 8700291-1) and US 5 269 202 (marketed under the trademark HARMONIC DRIVE). Other eccentric gears are com- mercially available under the trademark CYCLO DRIVE. These pre- viously known constructions generally enable gear changes within the range of approx. 10 : 1 to approx. 250 : 1.

The previously known reduction gears of the eccentric type are, however, also associated with problems and shortcom- ings. Among other things, a large number of teeth on the male and female gear rims of the gear is required at high gear changes, which entails that the teeth compulsorily become small ; something which limits the performance of the gears and increases the manufacturing difficulties. As an example, it should be mentioned that gears of the type HARMONIC DRIVE require approx. 500 teeth for the gear change of 250 : 1, while other constructions may be formed with fewer teeth, e. g. down to approx. 250 teeth. Another problem, common for a plurality of the previously known eccentric gears, is the so-called "transmitter"-function, i. e. the need for particular means to eliminate the eccentric motion between the eccentrically work- ing gear rim and the output shaft of the gear. Proposals for solutions of this problem are found, for instance, in the fol- lowing patents : EP 594 549 (SE 9203101-2) and EP 791 147 (SE 9404154-8). Strength problems, friction losses and angle plays increasing with time do, however, characterize the construc- tions according to the last- mentioned patents, the means for eliminating the eccentric motion between the gear rim and the output shaft tending to limit the performance of the gears within given outer dimensions. Furthermore, these means account for a considerable part of the total manufacturing cost of the gears.

Objects and Features of the Invention The present invention aims at obviating the above- mentioned shortcomings of previously known eccentric gears and at providing an improved eccentric gear. Therefore, a primary object of the invention is to provide an eccentric gear which with few, simple components can bring about very high gear changes while using a comparatively limited number of teeth in the co-operating gear rims. A further object is to provide an eccentric gear, the gear change of which may, in a simple and flexible way, be chosen within a wide spectrum of gear changes, all from very moderate gear changes (e. g. the magnitude of 10 : 1) to extremely high gear changes (the magnitude of 30 000 : 1 or more). By constructive simplicity, the gear should, further- more, be possible to manufacture in an effective way produc- tion-wise and at low costs.

According to the invention, at least the primary ob- ject is attained by the features defined in the characterizing clause of claim 1. Preferred embodiments of the eccentric gear according to the invention are furthermore defined in the de- pendent claims.

Brief Description of the Appended Drawings In the drawings : Fig 1 is a longitudinal section through a first embodiment of an eccentric gear according to the invention, Fig 2 is a cross-section A-A in fig 1, Fig 3 is a curve chart, which illustrates

HD 0197

suitable eccen- tricity values of the eccentric gear rims of the gear for different gear changes, Fig 4 is a longitudinal section showing a second, alterna- tive embodiment of the gear according to the inven- tion, and Fig 5 is a similar longitudinal section illustrating a third, alternative embodiment.

Detailed Description of Preferred Embodiments of the Invention In fig 1, numeral 1 generally designates an eccentric gear made according to the invention, while numeral 2 desig- nates a reference member in which the eccentric gear is mounted. In the example, the reference member 2 is assumed to consist of a spatially stationary included in a fixed machine stand. It should, however, already now be pointed out that the reference member 2 may in many practical applications also be rotatable. Furthermore, in fig 1, the reference numerals 3, 4 designate two rotatable machine elements, which in the example consist of shafts. More precisely, the element 3 consists of a short shaft piece, which is drivable from an external source of power 5, in the example consisting of a motor. However, also external sources of power are possible. In the gear, the shaft 3 constitutes an input or driving shaft, while the second shaft 4 is an output and driven shaft. The two shafts 3, 4 are rota- table around a common geometrical symmetry axis C. At the end (not shown) thereof distanced from the gear 1, the driven shaft 4 is mounted in suitable bearings.

Characteristic of the invention is that the gear 1 includes not only one, but two pairs of co-operating gear rims, viz. a first pair of gear rims 6, 7 situated closest to the reference member 2, and a second pair of gear rims 8, 9 which are axially separated from the first pair of gear rims. In a way characteristic of eccentric gears in general, the first pair of gear rims includes a male-like gear rim 6 having out- turned teeth, as well as a female-like gear rim 7 having in- turned teeth, the male gear rim 6 in the example being eccen- tric in relation to the symmetry axis C, while the female gear rim 7 is concentric with the symmetry axis C. In an analogous way, the second pair of gear rims includes an eccentric male gear rim 8 having out-turned teeth and a concentric female gear rim 9 having in-turned teeth. In both cases, the female gear rim (7 and 9, respectively) has a larger diameter than the appurtenant male gear rim (6 and 8, respectively) to enable engagement of only one or a few of the teeth of the male gear rim in the female gear rim. In a way characteristic of conven- tional eccentric gears, one of the gear rims in each pair, viz. the male gear rim 6 and 8, respectively, is arranged to roll off against the other one (7 and 9, respectively) during opera- tion.

In the example, the gear rims 6 and 8 are homologous in the sense that they both consist of male gear rims having out-turned teeth at the same time as the gear rims 7 and 9 are homologous in that they both consist of female gear rims having in-turned teeth.

According to the principle of the invention, an indi- vidual gear rim in one of the pairs of co-operating gear rims is rigidly connected to a homologous gear rim in the other pair. In the example, the male gear rims 6 and 8 are stiffly inter-connected by being formed on a common sleeve 10, while the female gear rims 7 and 9 are rotatable in relation to each other. The two female gear rims 7, 9 are each formed on the in- side of cap parts 11, 12, which together form an outer cap con- taining the vital parts of the gear. Of these cap parts, the first-mentioned one is rigidly connected to the reference mem- ber 2, e. g. via a screw joint 13, while the second one is rig- idly connected to the output shaft 4, e. g. via a screw joint 14.

The input shaft 3 is journalled in relation to the two cap parts 11, 12, preferably via ball bearings 15, 16, 17, as is exemplified in fig 1.

The two female gear rims 7, 9 are concentric with the symmetry axis C. In order to provide the requisite eccentric motion of the two male gear rims 6, 8, the input shaft 3 is formed with an eccentric body. In the example, this body has the shape of a cylindrical material portion 18 which is inte- grated with the rest of the shaft and extends eccentrically in relation to the symmetry axis C, more precisely between two shaft end portions which are cylindrical and concentric with the symmetry axis C. A central geometric axis X which is con- centric with the envelope surface of the eccentric body 18 ex- tends at a certain, limited angle (e. g. 0, 1-1°) to the symmetry axis C. The sleeve 10 with the male gear rims 6, 8 is jour- nalled in relation to the eccentric body 18 by means of bear- ings 19, 20, e. g. in the shape of ball bearings (see also fig 2). The sleeve has a cylindrical basic shape, the male gear rims 6, 8 being concentric with the eccentric axis X. Here, it should be pointed out that the eccentricity of the male gear rims and the sleeve 10 may also be provided by means of spaced- apart, ring-shaped eccentric portions on the shaft 3 instead of by means of the continuous, cylindrical eccentric body 18.

The eccentric axis X extends from a point of inter- section P situated along the symmetry axis C, which point is situated at a certain distance from the male gear rim 8, more precisely thereoutside, and at a larger distance from the male gear rim 6. This means that the eccentricity of the male gear rim 8 in the example is smaller than the eccentricity of the male gear

rim 6. It should, however, be emphasized that the eccentric axis X may also be tilted in an opposite way in rela- tion to the one shown in fig 1, i. e. with the point P situated in the left part of the input shaft 3, the eccentricity of the male gear rim 8 becoming larger than the eccentricity of the male gear rim 6. In the case shown in fig 1, the direction of rotation of the output shaft 4 becomes opposite the direction of rotation of the input shaft 3. In the second case, when the point of intersection P is located in the left part of the in- put shaft, the shafts 3 and 4 will obtain the same direction of rotation, i. e. the shaft 4 becomes co-rotating.

The teeth of the gear rims may advantageously be formed in the manner is described in EP 717 819 (SE 9302907-2), contact points between individual teeth extending helically along the gear rims while guaranteeing an even and silent transmission of power between the teeth. It should also be men- tioned that the male gear rims as well as the female gear rims may be given different rotary-symmetrical basic shapes, e. g. a cylindrical basic shape or a conical basic shape.

The Function of the Gear According to the Invention In the following, the number of teeth in the male gear rims 6, 8 are designated Z5 and Zg, respectively, while the number of teeth of the female gear rims are designated Z, and Zg respectively. Furthermore, the eccentricity of the male gear rim 6 in relation to the symmetry axis C is designated e1 and the corresponding eccentricity of the male gear rim 8 is designated e,.

For the sake of simplicity, it is assumed that the reference member 2 is fixed and immovable. If the reference member would consist of a rotary element, it is, however, easy to superimpose the rotation speed of the reference member on other rotation speeds, mentioned below, and reach entirely uni- versal relations.

The engine or source of power 5 gives the shaft 3 a certain rotary speed #s. In doing so, the male gear rim 6 is forced to roll off against the female gear rim 7, at the same time as the male gear rim 8 rolls off against the female gear rim 9. In a previously known way (see, for instance, EP 345 276 and EP 717 819) the gear sleeve 10 and the male gear rims 6, 8 thereof obtains a rotary speed 8 according to the formula : (08 =-cos/i, in which i = Z6/ (Z7-Z6) (a) or, after superimposition of a conceived rotary speed #1 of the reference member 2, more generally : #8 - #1 = - (#s - #1)/i, which may be simplified to : (b) In an analogous way, the following equation is obtained to describe the speed #9 of the output shaft : Mg = 1)/j- o,,/j, in which j = Z8 / (Z9 - Z8) (C) After elimination of o), from the equations (b) and (c), the following relation is obtained : (d) By suitable selections of the parameters i and j, i. e. suitable combinations of the number of teeth Z6-Z9, a wide spectrum of different gear changes may be attained. In the chart below, a selection of feasible combinations are given, which are all based on the assumption that m=0, i. e. that the reference member 2 is fixed. Example Z@ Z@ Z@ i j 1 178 179 179 180 178,0 179 -31 862 2 177 179 179 180 88,5 179 -175 3 176 179 17. 9 180 58, 7 179-87, 3 4 169'170 179 180 169, 0 179-3 025 5 168 170 179 180 84,0 179 -158 6 167 170 179 180 55, 7 179-80, 8 7 149 150 179 180 149,0 179 -889 8 148 150 179 180 74,0 179 -126 9 147 150 179 180 49,0 179 -67, 5 10 119 120 179 180 119, 0 179-355 11 118 120 179 180 59, 0 179-88, 0 12 117 120 179 180 39, 0 179-49, 9 13 89 90 179 180 89, 0 79-177 14 SS 90 179 180 44, 0 179-58, 3 15 87 90 179 180 29, 0 179-34, 6 16 59 60 107 108 59, 0 107-131 17 58 60 107 108 29,0 107 -39, 8 18 57 60 107 108 19,0 107 -23, 1 19 56 60 107 108 14, 0 107-16, 1 20 55 60 107 108 11, 0 107-12, 3 21 54 60 107 108 9,0 107 -9, 8 179 180 178 179 179, In the above chart, it may be seen that, without re- sorting to a considerable large number of teeth in the respec- tive gear rims (may vary between approx. 50 and approx. 180), it is possible to practically freely select gear changes within the range of 10 : 1 to 32 000 : 1, more precisely by means of a construction which includes a very small number of components, which in themselves are simple to manufacture ; something which ensures a low manufacturing cost.

The examples 1-21 above relates to the embodiments according to figs 1 and 4, where the output shaft 4 is contra-rotating. However, example 22 relates to a conceived embodiment example according to which the output shaft 4 is co-rotating.

When a gear from a chosen parameter combination is to be constructed in detail, the constructor is faced with the problem of generating teeth combinations, which are feasible to combine on one and the same eccentric axis. When a number of teeth parameter combinations according to the chart above are further examined, it turns out that there is an apparent con- nection between the eccentricity value"e"in relation to the division diameter of the gear rims and the desired gear change ratio. As seen in fig 3, it is only possible to synthetize practically useful teeth solutions within a relatively narrow band along an"ideal line"21 according to the above-mentioned EP 345 276. In fig 3, the relative value e/D x 1000 is shown along the Y-axis, where D is the diameter of the gear rim, while the values of the gear change i and j, respectively, are shown along the X-axis.

HD 0199

In the preferred embodiment according to fig 1, the eccentric body 18 is-as has been pointed out above-not only generally eccentric in relation to the female gear rims 7, 9 which are concentric with the symmetry axis C, but also oblique with the eccentric axis X thereof in relation to the symmetry axis C. In this way, a large degree of freedom to choose dif- ferent eccentricity values for the co-operating pair of gear rims 6, 7 and 8, 9, respectively, is obtained ; something which is expounded further below.

If moderately large gear change ratios are desired, the teeth parameters according to the above chart of examples have to be chosen so that the figures i and j, respectively, are strongly different, e. g. j large and i small, or vice versa. In the example 14 of the chart, a desired gear change of approx. 58 : 1 is obtained, something which has been provided by choosing i = 44 and j = 179. According to fig 3, the following values are then selected : el/Dl within the range of 0, 0085-0, 0095, and e2/D2 within the range of 0, 0025-0, 0030.

This makes the design of a gear construction having an eccen- tric axis X which is parallel to the symmetry axis C more dif- ficult, and enforces the relation D, zt 3 x Dl.

In fig 3, three experiments fl, 2, f to use the same eccentricity at a given diameter D of the two gear rims are illustrated. All these experiments result in gear changes > 300 : 1. In many practical applications for the gear according to the invention, gear changes within the range 40 : 1-150 : 1 are, however, desired ; something which consequently is not pos- sible to practically realise with an eccentric body, the centre axis of which is parallel to the symmetry axis C. A hypotheti- cally feasible way to solve this dilemma would be to let the pair of gear rims with the higher gear change have a consider- ably smaller diameter than the pair of gear rims with the lower gear change, whereby the two ratios e/D may be approached to each other. In such a conceived embodiment, the two pairs of gear rims have to be made with widely different diameters D so that the ratio e/D becomes approximately equal.

The torque transmission ability of the gear is, in all essentials, determined by the smallest one of the two diameters D in that : Mou is approximately proportional to D x L, where L is the tooth width.

In doing so, the outer dimension of the gear is determined by the largest one of the two D-values. In other words, the possibilities of constructing optimal gears having gear changes smaller than approx. 300 : 1 are extraordinarily limited if the eccentric axis X would be positioned parallel to the symmetry axis C.

However, if the eccentric body 18 is tilted in the way which is shown in the preferred embodiment according to fig 1, large freedom is given to choose gear changes within a wide spectrum and at the same time attain an optimum, compact con- struction. The gear may then be constructed in the following way : 1) The largest feasible gear rim diameter for the two pairs of gear rims is selected in view of limitations of the outer dimensions as well as suitable solutions to the problem of constructing the bearings of the gear for the application in question.

2) The centre axis X of the male gear rims 6, 8 or the sleeve 10 is tilted in relation to the symmetry axis C in such a way that each one of the male gear rims get an ideal eccen- tricity according to fig 3.

3) The tooth width L that is required for the transfer of the maximum torque is determined.

4) The outer edge of each one of the gear rims is located at the borderline for feasible rates of the parameter e/D according to fig 3.

5) From these parameters, a suitable length and a suitable angle of inclination of the eccentric body 18 are selected.

If a large gear change is desired, the gear may be formed with pairs of gear rims placed near each other, while small gear changes demand a certain distance between the gear rims. Thus, in the latter case, the gear grows somewhat length- wise, but in spite of this fact the construction becomes more compact and less cost-demanding than other known eccentric gears.

Additional Alternative Embodiments of the Invention Reference is now made to fig 4, which illustrates an alternative embodiment of a gear, the construction of which to a large extent corresponds to the structure of the gear accord- ing to

fig 1. In this case, however, the eccentric body 18 is formed in such a way that the oblique eccentric axis X cuts the symmetry axis C at a point P situated between the two spaced- apart radial planes in which the male gear rims 6, 8 are situ- ated. Advantageously, the point of intersection P may be situ- ated approximately halfway between the two male gear rims.

A certain difference also exists in the design of the external gear cap. In the embodiment according to fig 1, the two cap parts 11, 12 are journalled in relation to each other via a bearing 22, e. g. a sliding bearing or cross roller bear- ing, a seal 23 being arranged in a corner area between a ring- shaped flange 24 and a shoulder surface 25 on the cap part 12.

However, in the embodiment according to fig 4, two bearings 22 are arranged between the cap parts 11 and 12, the cap part 11 being formed so that it contains the cap part 12.

The sealing 23 is arranged at a free end of the cap part 11 externally of an end wall 26 of the cap part 12.

In fig 5, an additional alternative embodiment is visualised, which may be said to be"inverse"in relation to the embodiments of figs 1 and 4. Thus, in this case the two male gear rims 6, 8 are concentric with the symmetry axis C for the two rotatable machine elements or the shafts 3 and 4, while the female gear rims 7, 9 are eccentric in relation to the sym- metry axis. More precisely, the female gear rims 7, 9 are formed on the inside of a tubular body 11'which at opposite ends is rotatably journalled via bearings 27, 28. More pre- cisely, one of the ends of the tube body 11'is journalled on the input shaft 3 via the bearing 27, while the opposite end is, via the bearing 28, journalled on the outside of a fixed sleeve 29, which at an inner end has a flange 30 on which the male gear rim 8 is formed. At the inner end thereof, the output shaft 4 has a flange 31 on which the male gear rim 6 is formed.

In this case, the two female gear rims 7, 9 may in an advanta- geous way be integrated with each other in such a way that they constitute portions of a single common gear rim ; something which to a large extent facilitates the manufacture. Further- more, the engine 5 is firmly attached to one end of a house 32, the opposite end of which is rigidly connected to the reference member 2, which in turn may be stationary as well as rotary.

In conclusion, it should be pointed out that the dif- ference in the number of teeth on each male gear rim and the number of teeth in each co-operating female gear rim may advan- tageously amount to 1, although also another difference may exist. Furthermore, at least two homologous gear rims, e. g. the male gear rims 6, 8, in the two pairs of co-operating gear rims, have to have a differently large number of teeth.

Feasible Modifications of the Invention The invention is not solely restricted to the embodi- ments described above and shown in the drawings. Although it is preferred to form the gear with the centre or rotation axis of the eccentric gear rims oblique in relation to the symmetry axis of the gear, it is thus also feasible within the scope of the invention to locate said centre axis parallel to the symme- try axis and with a certain eccentricity in relation thereto.

In fig 2, it has been exemplified that the teeth of the gear rims may be involute-shaped. However, within the scope of the invention the design of the gear rims and the teeth thereof may be varied within wide limits. For instance, the male gear rims as well as the female gear rims may be cylindrical, but conical in other embodiments, e. g. in the way disclosed in SE 9403348-7 (publication number 503 487). Furthermore, the teeth may be obliquely cut or helical, e. g. in the way disclosed in the above-mentioned EP 717 819. Furthermore, in order to eliminate the risk of teeth play, different possibilities may be used to fine adjust the axial position of the gear rims along the eccentric axis, e. g. by means of washers, such as shim washers or axially resilient washers. Furthermore, it is feasible to use cycloid-shaped teeth or teeth made in another way instead of involute-shaped teeth. Also, the design of the requisite bearings and seals may vary within wide limits depending on the applications and environmental requirements in question. For instance, instead of the bearings 15, 16, 17, 19, sliding bearings, needle bearings or cylindrical-alternatively coni- cal-roller bearings may be used. As bearings 22 between the cap parts, ball bearings, needle bearings, roller bearings or cross roller bearings may be used instead of sliding bearings.

In the examples according to figs 1 and 4, the two male gear rims 6 and 8 are stiffly united to each other by being inte- grated into one and the same machine component, viz. the sleeve 10. However, these two homologous gear rims may also be rigidly connected to each other and at the same time axially adjustable in relation to each other. Thus, these two homologous gear rims, as is defined in claim 11, may be rigidly connected to each other by being formed on individual

sleeve parts, being inter-connected via a splined coupling, which on one hand, guarantees torsional and flexural rigidity between the sleeve parts and thereby the gear rims, but which on the other hand permits axial displacement of the sleeve parts in relation to each other. Such an embodiment is especially suitable for such eccentric gears in which it is desirable to enable fine adjust- ment of the axial position of the gear rims along the eccentric axis in the way indicated above with the outermost object to minimise the teeth play of the gear.

HD 0202

EXHIBIT 3

02 1LL0M1

[redacted]

PURCHASE ORDER

Date	P.O. No.
12/3/2008	5175

Vendor:

Harmonic Drive LLC
247 Lynnfield Street
Peabody, MA 01960

Ship To:

[redacted]

Please call us at

[redacted]

with any questions on this order.

Expected	FOB
1/19/2009	

Item	Catalog No.	Description	Qty.	Rate	Amount
Tool a...	FHA-40C-50-...	Harmonic Drive servo actuator, with incremental encoder with limit switch option	2	[redacted]	
Tool a...		special discount			

Total	[redacted]