BULKY DOCUMENTS

(Exceeds 300 pages)

Proceeding/Serial No: 91182064

Filed: 06-29-2009

Title: Opposer's First Notice of Reliance

Part 2 of 3

Processed by Duane Foster

AS HOLDINGS, INC.
v. H&C MILCOR, INC.
Opposition No. 91182064
OPPOSER'S EXHIBIT
1

IN THE UNITED STATES PATENT AND TRADEMARK OFFICE
BEFORE THE TRADEMARK TRIAL AND APPEAL BOARD

Serial No. 76/461,157
For the Mark: Miscellaneous Design: (Pipe Boot Product Design)

AS Holdings, Inc. Opposer, v. H&C Milcor, Inc., f/k/a Aquatico of Texas, Inc. Applicant.	Opposition No. 91182064

SECOND RENOTICE OF DEPOSITION OF APPLICANT
PURSUANT TO FED.R.CIV.P. 30(b)(6)

PLEASE TAKE NOTICE that commencing on Friday, October 3, 2008 at 11:00 a.m., at Portals Plus 484 N. Thomas Drive, Bensenville, IL 60106, Opposer, AS Holdings, Inc. will take the deposition upon oral examination of Applicant, H&C Milcor, Inc., regarding the subjects listed on the attached Appendix A pursuant to Federal Rule of Civil Procedure 30(b)(6) and 37 CFR §2.120, upon oral examination by stenographic means. Plaintiff is requested to designate the person or persons most knowledgeable about the subjects listed on the attached Appendix A who consent to testify on behalf of Applicant, H&C Milcor, Inc.

The examination will continue from day to day until completed. You are invited to attend and cross-examine.

Dated: October 1, 2008

Terence J. Linn
Matthew D. Kendall
Van Dyke, Gardner, Linn & Burkhart, LLP.
2851 Charlevoix Drive SE, Suite 207
Grand Rapids, Michigan 49546
(616) 975-5500

Attorneys for Opposer, AS Holdings, Inc

Opposer's
EXHIBIT
#1 I.D.
10-3-08 S.G.D.

Appendix A

As used herein, "Applicant's mark" refers to the mark sought to be registered in Trademark Application Serial No. 76/461,157. As used herein, "Applicant" refers to the named Applicant of Trademark Application Serial No. 76/461,157, all predecessors in interest and successors in interest, and all related companies conducting business using Applicant's mark. (e.g. RPS Accessories, Commercial Products Group of Hart & Cooley, Inc., Milcor, Portals Plus)

1. Creation and development of Applicant's mark;

2. Use of Applicant's mark by Applicant, including without limitation the manner and time periods of use of Applicant's mark in association with Applicant's goods and services, first use of Applicant's mark and first use in interstate commerce of Applicant's mark;

3. The function, utility and beneficial attributes of the structures that comprise Applicant's mark and of each feature or component that in combination make up Applicant's mark, including without limitation the function, utility and beneficial attributes of the items referred to during prosecution of Application Serial No. 76/461,157 as the arcuate ring, the frusto-conical surface that is located below the arcuate ring, the annular nearly vertical surface, the horizontal annular surface, and the frusto-conical outer surface that is located above the horizontal annular surface;

4. The content and source of content of website materials of Applicant referencing or relating to goods associated with Applicant's mark, including without limitation the websites of Applicant, Portals Plus, Inc., H&C Milcor, Inc., Aquatico of Texas, Inc., RPS Accessories, and Commercial Products Group of Hart & Cooley, Inc.;

5. Trademark Application Serial No. 76/461,157, including without limitation the representations made therein as to the function and/or lack of function of Applicant's mark and the factual submissions by Applicant (including all affidavits, declarations and exhibits filed therein, including Exhibits A-T to the Affidavit by Ronald Resech dated September 30, 2002);

6. The content of all drawings filed in Trademark Application Serial No. 76/461,157;

7. Secondary meaning or acquired distinctiveness of Applicant's mark, including without limitation all factual information relied upon by Applicant for establishing secondary meaning or acquired distinctiveness;

8. Sales of goods in association with Applicant's mark by Applicant, including without limitation annual volume of sales in dollars and in units;

9. Marketing of goods in association with Applicant's mark by Applicant, including without limitation types of marketing of goods in association with Applicant's mark (e.g. magazine advertising, trade shows, direct mailing, etc.), annual dollar amount of expenditures for each type of marketing of goods in association with Applicant's mark,

and unit placement amount annually of each type of marketing of goods in association with Applicant's mark;

10. Competitors' pipe boots and the configurations thereof;

11. U.S. Patent No. 4,211,423 and the pipe boot disclosed therein;

12. The corporate organization of and relationship between Applicant, its predecessors in interest and successors in interest, and all companies doing business under a name that includes "RPS Accessories," "Commercial Products Group," "Hart & Cooley, Inc.," "Milcor" and/or "Portals Plus" that make, market, sell or distribute goods in association with Applicant's mark.

IN THE UNITED STATES PATENT AND TRADEMARK OFFICE
BEFORE THE TRADEMARK TRIAL AND APPEAL BOARD

AS HOLDINGS, INC. Opposer, v. H&C MILCOR, INC. f/k/a AQUATICO OF TEXAS, INC. Applicant.	)	Opposition No. 91182064 Serial Number: 76/461,157 Mark: Miscellaneous Design: (Pipe Boot Product Design)

CERTIFICATE OF SERVICE

I hereby certify that on October 1, 2008, a true and correct copy of the Second ReNotice of Deposition of Applicant Pursuant to Fed.R.Civ.P. 30(b)(6) with Appendix A was sent via Email and by Fax, to Attorney for Applicant as follows:

Dillis V. Allen
105 S Roselle Rd, Suite 101
Schaumburg, IL 60193

Email: vicvardon@sbcglobal.net
Fax: (847) 931-0420

Terence J. Linn

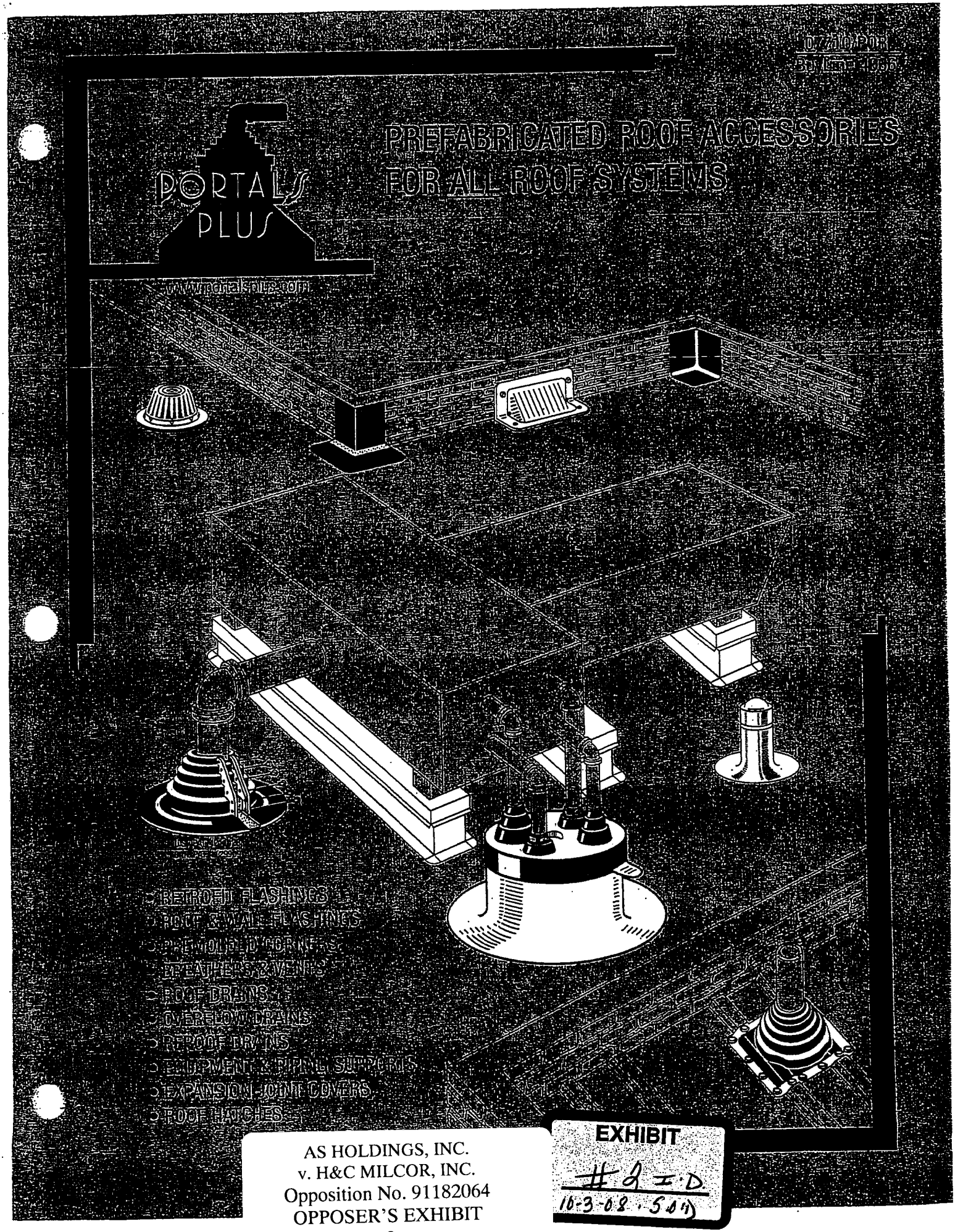

AS HOLDINGS, INC.
v. H&C MILCOR, INC.
Opposition No. 91182064
OPPOSER'S EXHIBIT
2

EXHIBIT
#2 I.D.
10-3-08 . SOD

Solutions for Roof Leak Problems

Technical Product Information

www.portalsplus.com

For all types of roofs

Good roofing practice allows penetration movement independent of the roof. This requires a flexible seal at the penetration and proper attachment to the roof.. With the complexity and assortment of roofing systems available today, a variety of designs is required to work with all conditions. A good flashing system must be versatile- economical- maintenance free- simple to install- adapt to multiple penetrations and angle irons- yet, have uniformity allowing fast, easy installation and specification. All components must be weather resistant, approved by the industry, and, above all, eliminate leaks. For these reasons, Portals Plus offers the following products.

REALISTIC ANSWERS

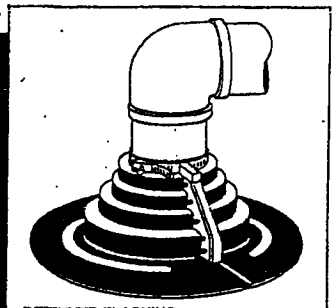

RETROFIT FLASHING

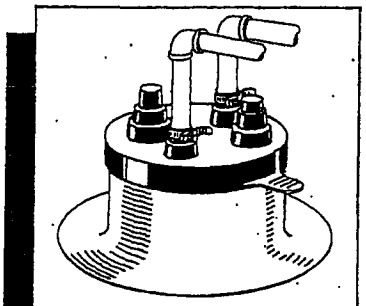

ALUMI-FLASH

ADVANTAGES

- ALLOWS PENETRATION MOVEMENT
- MAINTENANCE FREE
- ECONOMICAL AND UNIFORM
- ACCOMMODATES MULTIPLE PROJECTIONS
- NO NEED TO DISCONNECT LINES
- ELIMINATES LEAKS
- PERMANENT
- SIMPLE AND FAST TO INSTALL

SOURCES OF TROUBLE

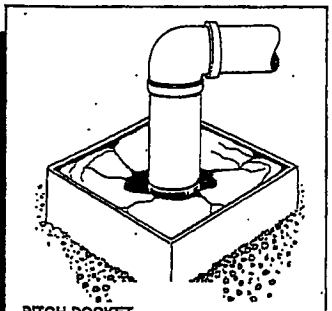

PITCH POCKET

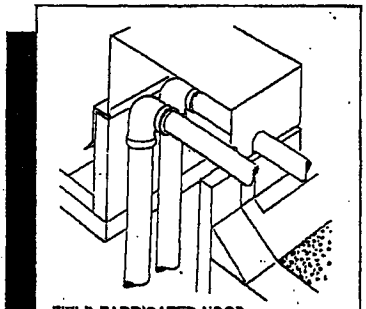

FIELD FABRICATED HOOD

DISADVANTAGES

- VERY COSTLY
- PIPE PROJECTION NOT SEALED
- LIMITED PIPE DIRECTION
- DOES NOT ALLOW FOR MOVEMENT
- TEMPORARY SEAL
- CONTINUAL MAINTENANCE
- MAJOR CAUSE OF ROOF DAMAGE

Roof leaks are the biggest problem of architects and building owners. 85% of all roof leaks occur at penetrations and corner flashings due to poor details which fail to accommodate movement. Extreme roof temperature changes require durable and flexible flashings. High labor costs and no industry standards allow for poor workmanship and non-functional field fabricated flashings. A contractor's "good enough" attitude creates temporary expedients at the owner's expense.

The National Roofing Contractors Association states: "Pitch pockets or pans by their design, are not intended to be continuously watertight. Their use should not be encouraged since better methods are available to accomplish the same end. Pitch pans or pockets require frequent inspection and maintenance, and usually a great deal of damage can occur before the leak around a pitch pan or pocket is evident."

PORTALS PLUS 484 Thomas Drive, Bensenville, IL 60106 TEL: (800) 624-8642 FAX: (630) 766-5259

© Copyright, June, 2007, Commercial Products Group of Hart & Cooley, Inc. All Rights Reserved. All information is subject to change without notice. Dimensions and specifications shown are within manufacturing tolerances.

Retrofit Flashings

Technical Product Information

www.portalsplus.com

For existing penetrations that can not be disconnected

The Retrofit Flashing offers a quick and easy installation, eliminating roof leaks at pipes and other roof penetrations without disconnecting the penetration. However, the Retrofit still allows for movement between the penetration and roof, while maintaining a perfect seal. The perfect seal is achieved with an integral tongue and groove closure, plus an overlapping flap, and is mechanically fastened with stainless steel hardware, which is included. Retrofit Flashings are available in EPDM for single-ply roofing and Neoprene for built-up asphalt, coal tar pitch, modified bitumen, and cold process systems. Both materials have excellent resistance to ozone and ultraviolet degradation and a serviceable temperature range of -60° F to +270° F. There are two Retrofits available: Small, for pipes up to 3", and Large for pipes 3.5" through 6". The Retrofit Flashings also have the added benefit of a variety of adapter rings allowing for even greater versatility. By using the Retrofit Adapter Rings, projections with unusual shapes can be flashed in a positive and secure manner.

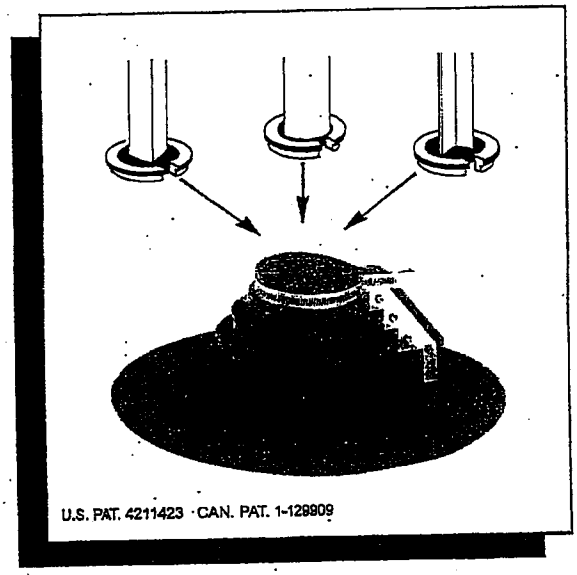

U.S. PAT. 4211423 · CAN. PAT. 1-128909

Adapters available to fit most Retrofit Flashings

Round Adapters
.375" to 3.5"

Angle Iron
1.00", 1.75", 3", 4"

Square Tube
3" and 4"

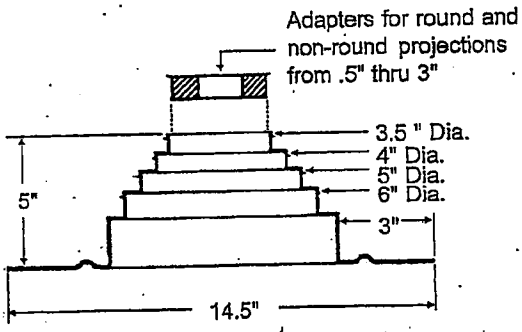

Large Retrofit

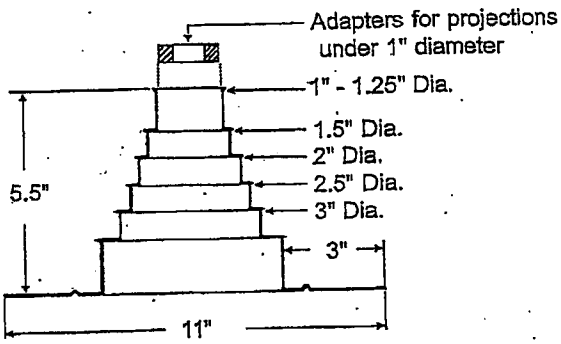

Small Retrofit

PORTALS PLUS 484 Thomas Drive, Bensenville, IL 60106 TEL: (800) 624-8642 FAX: (630) 766-5259

© Copyright, June, 2007, Commercial Products Group of Hart & Cooley, Inc. All Rights Reserved. All information is subject to change without notice. Dimensions and specifications shown are within manufacturing tolerances.

Pipe Portal® Systems

Technical Product Information

www.portalsplus.com

New construction flashings with roof curb mountings

A versatile, leak proof and weathertight solution to routing pipes through the roof. The Pipe Portal System is designed to allow for both vertical and horizontal pipe movement, yet provide maintenance free permanent installation, which accommodates pipe sizes of .375" up to 12". The curb cover is molded from ABS plastic (Acrylonitrile Butadiene Styrene) with a laminated acrylic coating, which gives high resistance to both ozone and ultraviolet sun rays, as well as serviceable temperature range of -40° F to + 160° F. The molded sealing rings on the collared opening of the cover, mated with the grooves in the rubber cap, assures a "Weather-Tite Pressure Seal" and mechanical lock.

The protective rubber caps are compression molded of EPDM (Ethylene Propylene Diene Monomer) rubber with a serviceable temperature range of -60° F to + 270° F, and also have high resistance to both ozone and ultraviolet sun rays. The conically shaped steps of the cap provide a taut waterproof seal around the pipe and the Stainless Steel Snaplock Swivel Action clamps provided give the added protection to guarantee the pipe seal. The swivel action of the clamp cuts installation time by 75%.

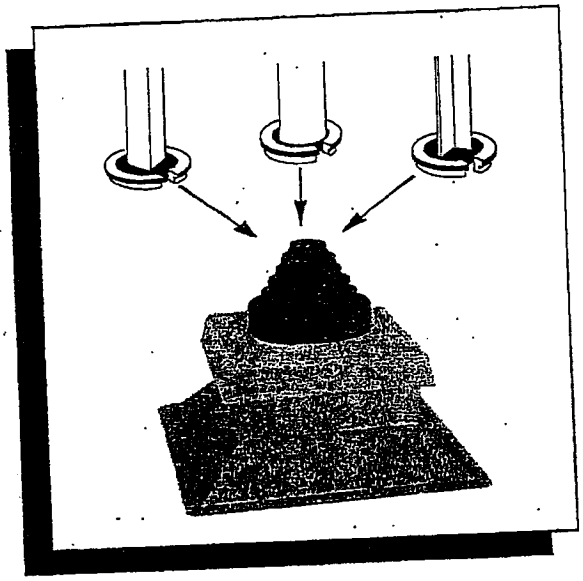

Available adapters to fit most Pipe Portal Pipe Flashings

Round Adapters
.375" to 3.5"

Angle Iron
1", 1.75", 3", 4"

Square Tube
3" and 4"

SELECT A CAP FOR EACH BASE REQUIRED

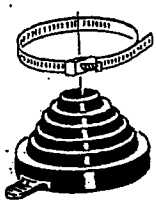

C-126
1 - 2" TO 6" PIPE

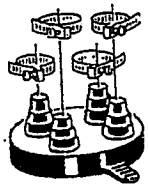

C-412
4 - 1" TO 2" PIPES

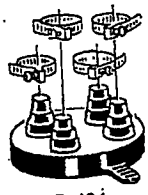

C-481
4 - .375" TO 1" PIPES

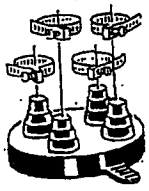

C-212
2 - .375" TO 1" PIPES
2 - 1" TO 2" PIPES

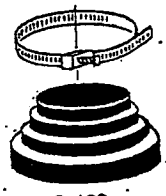

C-182
1 - 8" TO 12" PIPE

PORTALS PLUS 484 Thomas Drive, Bensenville, IL 60106 TEL: (800) 624-8642 FAX: (630) 766-5259

© Copyright, June, 2007, Commercial Products Group of Hart & Cooley, Inc. All Rights Reserved. All information is subject to change without notice. Dimensions and specifications shown are within manufacturing tolerances.

Double Pipe Portal® Systems

Technical Product Information

www.portalsplus.com

New construction flashings with roof curb mountings

A versatile, leak proof and weathertight solution to routing pipes through the roof. The Double Pipe Portal System is designed to allow for both vertical and horizontal pipe movement, yet provide maintenance free permanent installation, which accommodates pipe sizes of .375" up to 6". The curb cover is molded from ABS plastic (Acrylonitrile Butadiene Styrene) with a laminated acrylic coating, which gives high resistance to both ozone and ultraviolet sun rays, as well as serviceable temperature range of -40° F to + 160° F. The molded sealing rings on the collared openings of the cover, mated with the grooves in the rubber caps, assure a "Weather-Tite Pressure Seal" and mechanical lock.

The protective rubber caps are compression molded of EPDM (Ethylene Propylene Diene Monomer) rubber with a serviceable temperature range of -60° F to + 270° F, and also have high resistance to both ozone and ultraviolet sun rays. The conically shaped steps of the cap provide a taut waterproof seal around the pipe and the Stainless Steel Snaplock Swivel Action clamps provided give the added protection to guarantee the pipe seal. The swivel action of the clamp cuts installation time by 75%.

The Double Pipe Portal is ideally used to bring the line sets to condensing units, ice-makers, and chillers etc. Also ideal for mounting roof top satellite dishes.

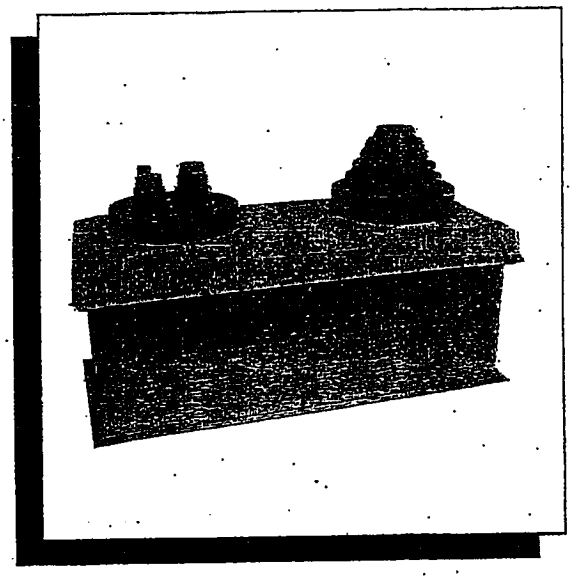

Available adapters to fit most Pipe Portal Pipe Flashings

Round Adapters
.375" to 3.5"

Angle Iron
1.00", 1.75", 3", 4"

Square Tube
3" and 4"

SELECT TWO CAPS FOR EACH BASE REQUIRED

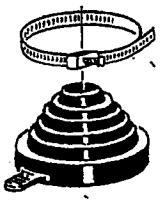

C-126
1 - 2" TO 6" PIPE

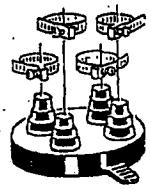

C-412
4 - 1" TO 2" PIPES

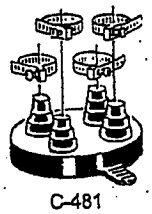

C-481
4 - .375" TO 1" PIPES

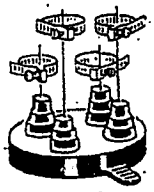

C-212
2 - .375" TO 1" PIPES
2 - 1" TO 2" PIPES

PORTALS PLUS 484 Thomas Drive, Bensenville, IL 60106 TEL: (800) 624-8642 FAX: (630) 766-5259

© Copyright, June, 2007, Commercial Products Group of Hart & Cooley, Inc. All Rights Reserved. All information is subject to change without notice. Dimensions and specifications shown are within manufacturing tolerances.

Equipment Rails

Technical Product Information

www.portalsplus.com

The solution for mounting roof equipment

Equipment Rails are prefabricated sheet steel structural members designed for all types of roof systems. Provides a uniform mounting pedestal for condensers, blowers, and other roof mounted equipment. Manufactured in 3 ft., 4 ft., and 6 ft. lengths to match the equipment and to span the proper number of roof joists. Equipment Rails have a high bearing capacity attained by a system of internal gussets welded into position at specific intervals along the length of the rails. A continuous wood nailer covered by a removable counterflashing provides for an effective method of attaching roofing felts and assuring a watertight installation. Equipment Rails replace inadequate railroad ties, arsenic contaminated treated lumber, costly pipe stubs, and leaky pitch pockets.

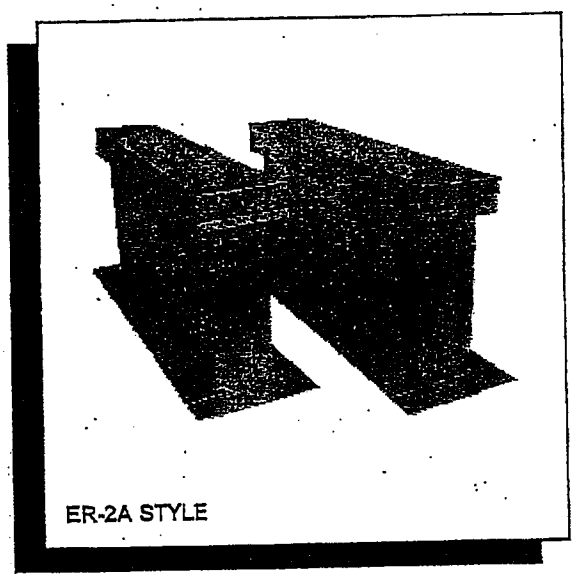

ER-2A STYLE

EQUIPMENT RAIL LOADING CHART

STYLE	ER-2A	ER-3A	ER-4A
WIDTH & HEIGHT	3.5" X 12"	3.5" X 8"	3.5" X 9.5"
MAXIMUM ALLOWABLE CONCENTRATED LOAD	3000 LBS.	1450 LBS.	1800 LBS.
MAXIMUM ALLOWABLE END REACTION	3300 LBS.	1700 LBS.	2200 LBS.
MAXIMUM ALLOWABLE INTERMEDIATE REACTION	3000 LBS.	1450 LBS.	1800 LBS.
MAXIMUM ALLOWABLE UNIFORM LOAD	860 LB/FT.	450 LB/FT.	550 LB/FT.

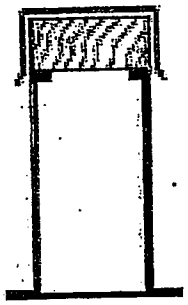

ER-2A
For Decks with Lightweight Fill or Tapered Insulation

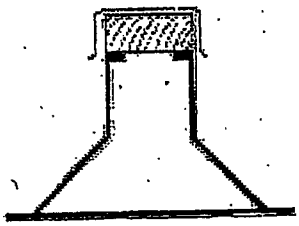

ER-3A
For Non-Insulated Decks

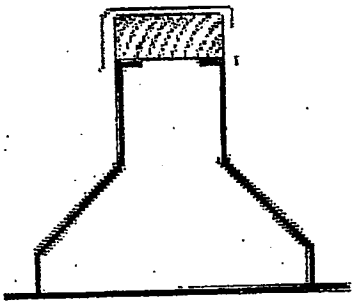

ER-4A
For Decks with Rigid Insulation

PORTALS PLUS 484 Thomas Drive, Bensenville, IL 60106 TEL: (800) 624-8642 FAX: (630) 766-5259

© Copyright, June, 2007, Commercial Products Group of Hart & Cooley, Inc. All Rights Reserved. All information is subject to change without notice. Dimensions and specifications shown are within manufacturing tolerances.

Pipe Mounting Pedestals

Technical Product Information

www.portalsplus.com

The solution for mounting rooftop pipes

Pipe Mounting Pedestals are the ultimate solution to mounting pipe runs across rooftops and are designed for all types of roof systems. Provides a uniform mounting pedestal for gas pipes, steam lines, refrigerant piping, water pipes, process piping, conduits, and other rooftop piping. Manufactured with a Portals Plus Equipment Rail as the base unit allows a proper mounting to the roof deck and provides a secure substrate for the roofing assembly flashing system, while the pipe roller assembly allows for pipe movement from expansion and contraction, yet secures the pipe to the assembly to prevent dislodgement. The pipe roller assembly provides full 12" vertical and horizontal adjustments to allow mounting piping level and straight across the rooftop. For weather protection, the pipe roller is solid cast iron and all exposed materials are manufactured of galvanized steel. Standard pipe roller assemblies are available for 2", 4", and 6" diameters, with custom sizes available up to 12" diameter. The Equipment Rail is also manufactured of galvanized steel with a wood nailer for securing the flashing assembly. Provides quick and easy installation and allows for future reroofing without disturbing piping and related interior processes. Pipe Mounting Pedestals replace inadequate wood blocking, plastic supports, and all types of supports that bear directly on the roof system which compress roof insulation, damage roof membranes, and create ponding water conditions which promote the growth of algae and early failure of the roofing system.

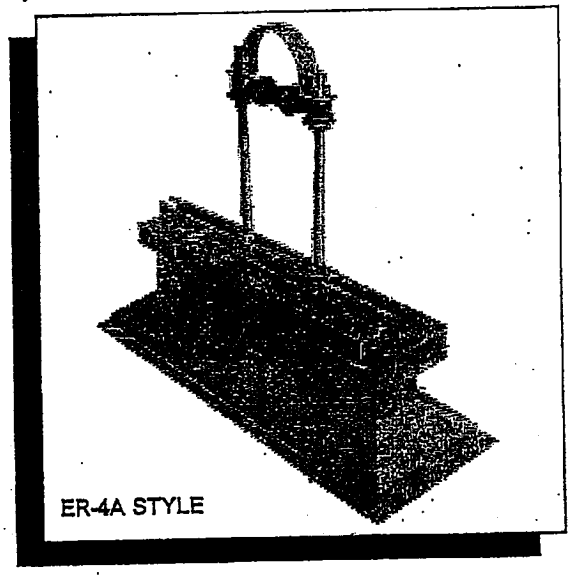

ER-4A STYLE

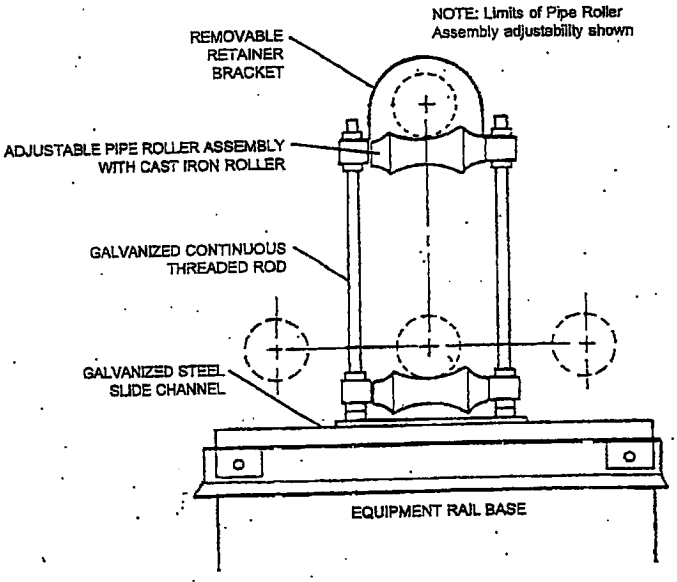

SELECT EQUIPMENT RAIL BASE FOR EACH PIPE MOUNTING PEDESTAL

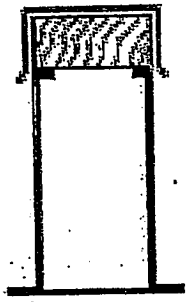

ER-2A
For Decks with Lightweight Fill or Tapered Insulation

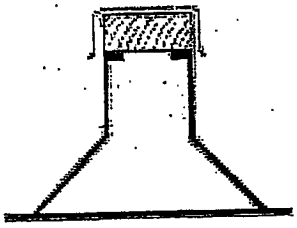

ER-3A
For Non-Insulated Decks

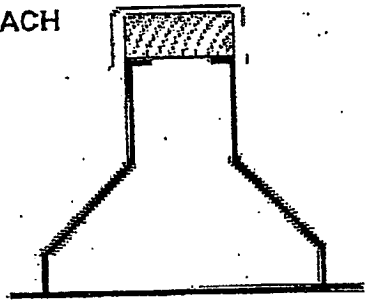

ER-4A
For Decks with Rigid Insulation

PORTALS PLUS 484 Thomas Drive, Bensenville, IL 60106 TEL: (800) 624-8642 FAX: (630) 766-5259

© Copyright, June, 2007, Commercial Products Group of Hart & Cooley, Inc. All Rights Reserved. All information is subject to change without notice. Dimensions and specifications shown are within manufacturing tolerances.

www.portalsplus.com

Roof Drains for new construction

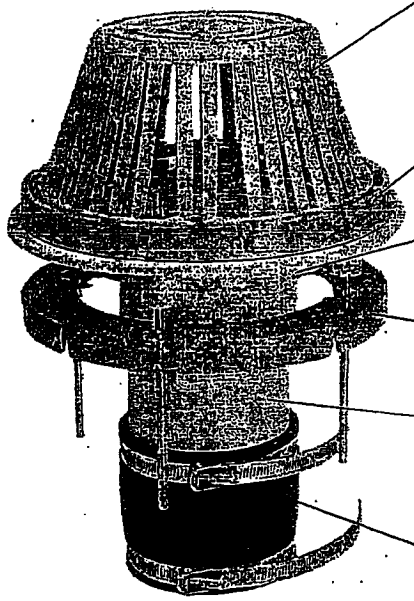

NOTES: *Included in standard roof drain.
**(Plus Pack) Includes standard roof drain and Plus Pack.

DOME STRAINER*
Portals Plus Dome Strainer is epoxy coated die-cast aluminum for longevity. The Dome Strainer bolts securely to clamping collar. (Dome Strainer also available in ultraviolet-stabilized polyethylene)

CLAMPING COLLAR/GRAVEL GUARD*
Portals Plus die-cast aluminum epoxy coated Gravel Guard and Clamping Collar is grooved for positive drainage and insures a maximum hold on roofing materials.

DRAIN BOWL*
Portals Plus Drain Bowls are available in 3", 4" and 6" sizes in Cast Iron, Cast Aluminum, ultraviolet-stabilized injection molded white PVC, and injection molded black ABS.

UNDERDECK CLAMP**
Portals Plus epoxy coated cast aluminum underdeck clamp holds the drain bowl securely to the deck.

EXTENSION**
Portals Plus Extension is a 6" length of schedule 40 pipe that extends the drain bowl down below the deck, to accommodate the expansion coupling (for PVC and ABS Plus Packs only).

EXPANSION COUPLING**
Portals Plus flexible Expansion Coupling allows for expansion and contraction that enables the installer to connect the drain to various types of piping (two stainless steel clamps included).

TYPICAL BUR INSTALLATION

TYPICAL EPDM INSTALLATION

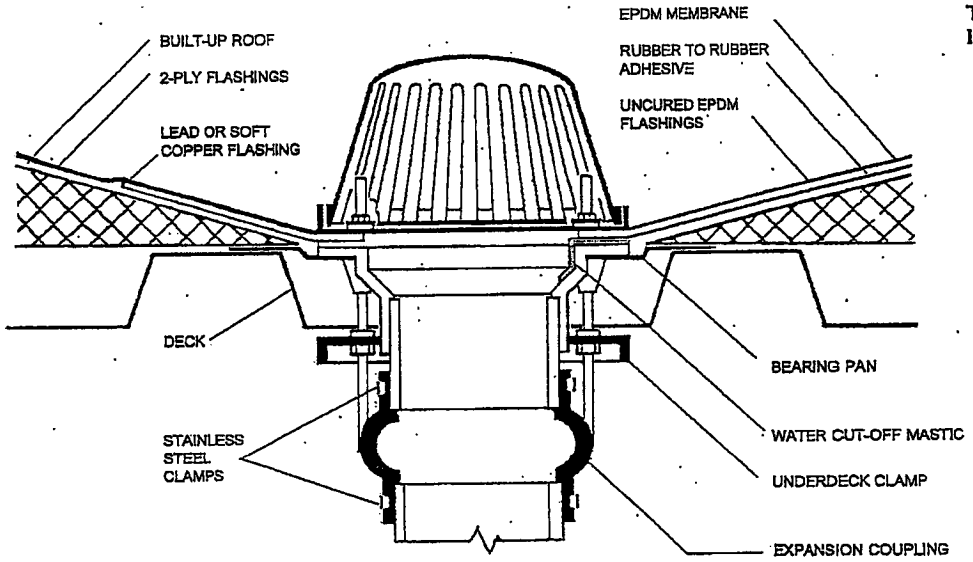

(AS DETAILED IN NRCA MANUAL)

PORTALS PLUS 484 Thomas Drive, Bensenville, IL 60106 TEL: (800) 624-8642 FAX: (630) 766-5259

 © Copyright, June, 2007, Commercial Products Group of Hart & Cooley, Inc. All Rights Reserved. All information is subject to change without notice. Dimensions and specifications shown are within manufacturing tolerances.

Roof Drains for new construction

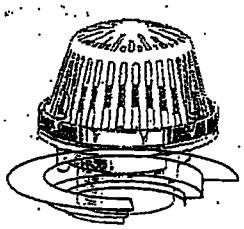

EXTENSION PAN

for installing a roof drain flush with the top surface of roof deck insulation. Creates an overflow drain when used in conjunction with an adjacent roof drain installed in a Bearing Pan at the deck surface. Allows insulation to surround the drain and pipe above the deck to prevent condensation. Simple topside installation of the heavy 18 gauge spun steel Extension Pan and roof drain. Accepts all Portals Plus Roof Drains and all insulations from 1/4" to 5-1/4" thick (thicker insulation on special order).

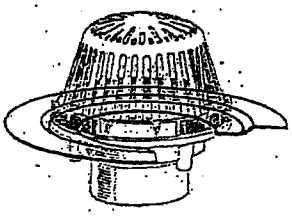

BEARING PAN

for installing a roof drain flush with the top surface of an un-insulated roof deck, such as plywood or poured decks. Made of heavy 18 gauge spun steel for easy topside installation. Allows structural poured decks to proceed ahead of the plumber- only a standard core hole is required. Accepts all Portals Plus Roof Drains and all roof decks.

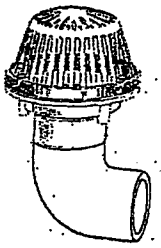

SIDE OUTLET

for installing a roof drain into a roof deck with a confined attic space below, such as wood frame construction. Available for all 3" and 4" Portals Plus Roof Drains.

OVERFLOW CLAMPING RING

for converting a standard roof drain or reroof drain to an overfow roof drain to comply with modern building codes. Simply install in place of the standard clamping ring. Fits all Portals Plus Roof Drains and ReRoof Drains.

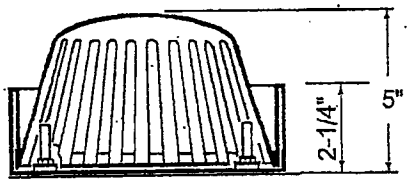

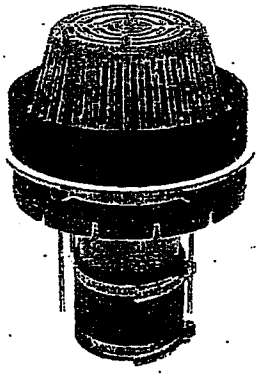

© Copyright. June, 2007, Commercial Products Group of Hart & Cooley, Inc. All Rights Reserved. All information is subject to change without notice. Dimensions and specifications shown are within manufacturing tolerances.

Parapet / Scupper Drain

Technical Product Information

www.portalsplus.com

Drains for sidewall roof installation

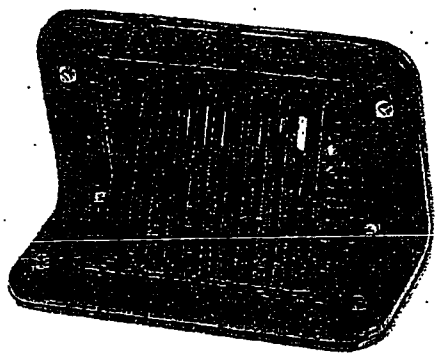

SCUPPER DRAIN

The Portals Plus Parapet/Scupper Drain is designed for sidewall roof installation to solve those aggravating through-wall drain problems. The Parapet/Scupper Drain combines horizontal and vertical drainage and is made up of four integral parts: the removable angled grate strainer, heavy duty flashing clamp, drain body, and the outlet hub. The outlet hub may be used at 45° or 90° by removing two bolts and changing the outlet position one-half rotation. The entire Parapet/Scupper Drain is manufactured of cast aluminum which is powder painted after fabrication. (Available in 2", 3", and 4")

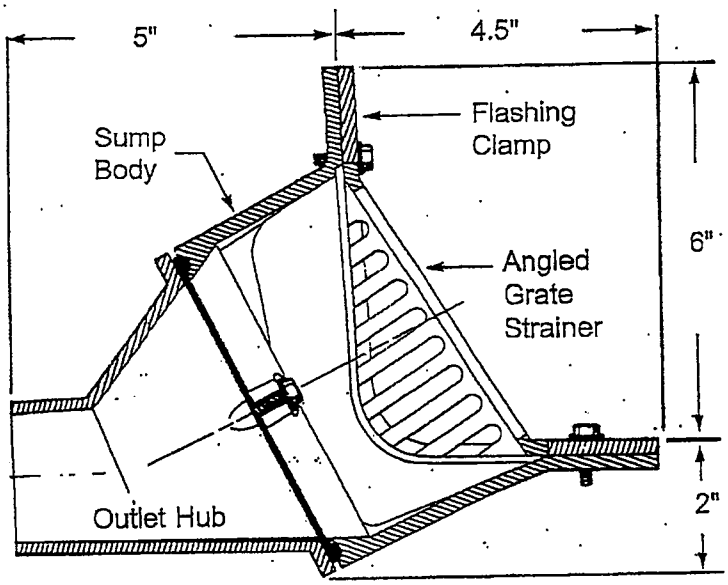

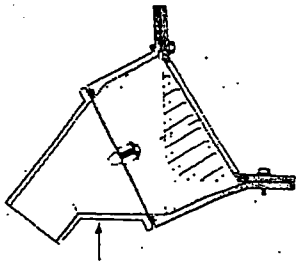

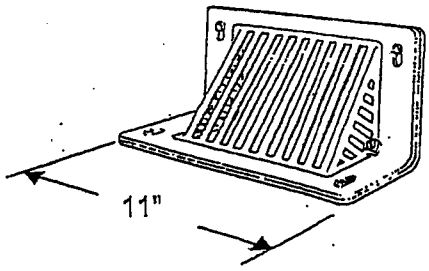

Outlet hub may be used at 45° or 90° by removing two bolts and changing outlet position one half rotation.

PORTALS PLUS 484 Thomas Drive, Bensenville, IL 60106 TEL: (800) 624-8642 FAX: (630) 766-5259

© Copyright, June, 2007, Commercial Products Group of Hart & Cooley, Inc. All Rights Reserved. All information is subject to change without notice. Dimensions and specifications shown are within manufacturing tolerances.

www.portalsplus.com

Drain inserts for retrofit applications

The Portals Plus ReRoof Drain is designed for the easiest and most reliable installation for use in conjunction with an existing drain when reroofing. The unit is based on a flat underside flange for flush roofing material installation. A special pre-compressed modified asphalt impregnated expanding foam sealing tape automatically makes a permanent elastic watertight seal to the existing drain, eliminating water back up. The flange and outlet tube are available in stainless, aluminum, PVC, or high temperature ABS. ReRoof Drains are available to fit 2", 3", 4", 5", and 6" drains.
The drain is completely installed on the roof top with NO special tools and all hardware is stainless steel. The unit is available with either plastic or cast aluminum dome strainer and the outlet tube gives minimum downsizing to the existing drain. The Portals Plus ReRoof Drain makes a perfect roofing termination point and offers an excellent connection to the plumbing below.

STAINLESS STEEL OR ALUMINUM

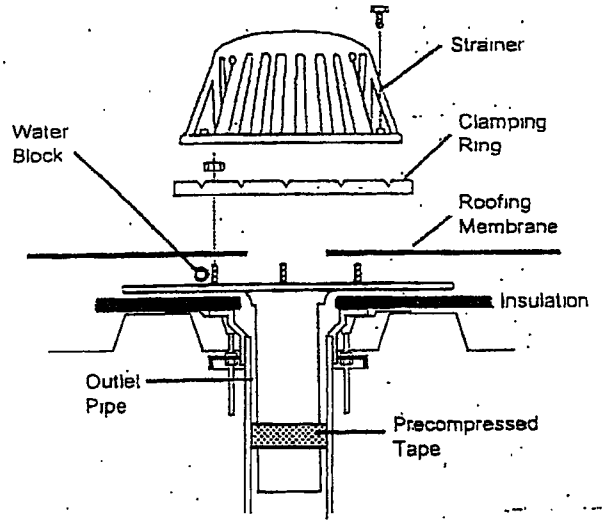

WHITE PVC

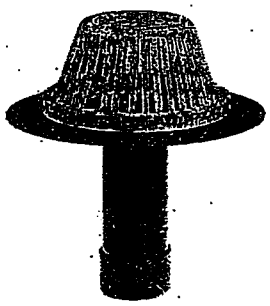

BLACK ABS

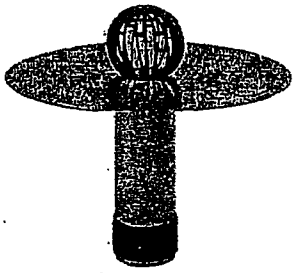

ALUMINUM INSERT

PORTALS PLUS 484 Thomas Drive, Bensenville, IL 60106 TEL: (800) 624-8642 FAX: (630) 766-5259

© Copyright, June, 2007, Commercial Products Group of Hart & Cooley, Inc. All Rights Reserved. All information is subject to change without notice. Dimensions and specifications shown are within manufacturing tolerances.

Alumi-Flash Systems

Technical Product Information

www.portalsplus.com

New construction flashings for all roof types

The Portals Plus Alumi-Flash is compatible with all types of roof systems and makes pitch pans obsolete. Due to the flexibility of the EPDM rubber caps, roof leaks are eliminated because penetrations are allowed to expand, contract, and vibrate independently of the waterproofing. There are five (5) caps available which accommodate a variety of pipes, tubes, and angle irons from .375" through 12". The caps are molded EPDM (Ethylene Propylene Diene Monomer) rubber which is compounded to resist degradation due to oxidation or exposure to ozone and ultraviolet rays, while having a serviceable temperature range of -60° F to +270° F. The caps are mechanically sealed to the Alumi-Flash base with a double "Weather-Tite Pressure Seal", which consists of two (2) beads formed into the collar that mate with the double grooves on the inside of the caps. The base must be roofed in, using good roofing practices. Together, the cap and base provide a permanent, watertight and maintenance free means for penetrating roofs that is simple and easy to install.

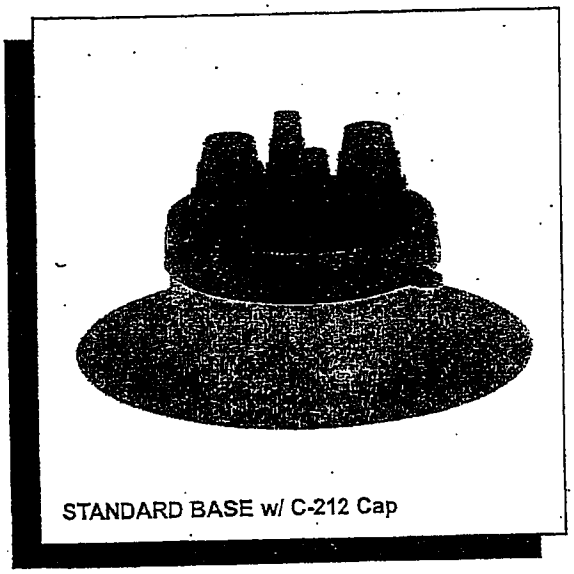

STANDARD BASE w/ C-212 Cap

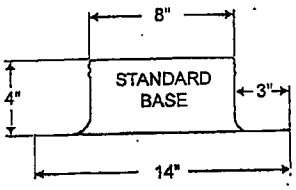

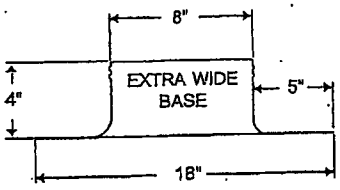

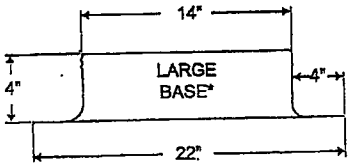

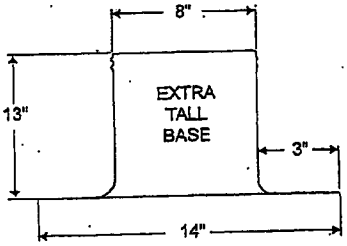

*For use with C-182

SELECT A CAP FOR EACH BASE REQUIRED

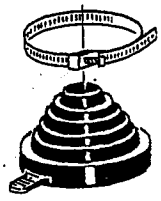

C-126
1 - 2" TO 6" PIPE

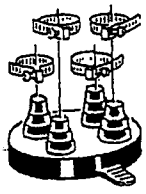

C-412
4 - 1" TO 2" PIPES

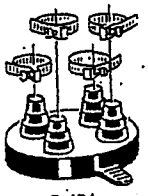

C-481
4 - .375" TO 1" PIPES

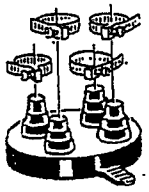

C-212
2 - .375" TO 1" PIPES
2 - 1" TO 2" PIPES

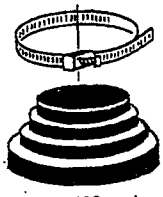

C-182
1 - 8" TO 12" PIPE

Adapters available to fit most Alumi-Flash

PORTALS PLUS 484 Thomas Drive, Bensenville, IL 60106 TEL: (800) 624-8642 FAX: (630) 766-5259

© Copyright, June, 2007, Commercial Products Group of Hart & Cooley, Inc. All Rights Reserved. All information is subject to change without notice. Dimensions and specifications shown are within manufacturing tolerances.

Deck-Mates

Technical Product Information

www.portalsplus.com

Flashings for metal roof and wall systems

The Portals Plus Deck-Mate is designed to accommodate projections from .125" to 26" in diameter, and work in conjunction with any configuration of corrugated metal roof. The Deck-Mate comes in two styles, standard for normal projection flashing and retrofit style for use with projections that can not be disconnected. The Deck-Mate is engineered so the aluminum flanged base bends to any contours, roof irregularities, or pitches. The Deck-Mate seals watertight to the roof panel with an approved sealant and standard roofing fasteners. Deck-Mate is available in two materials - EPDM for normal use and Silicone for high temperature pipes. Adapters available for round, square tube, and angle iron available to fit most Deck-Mates.

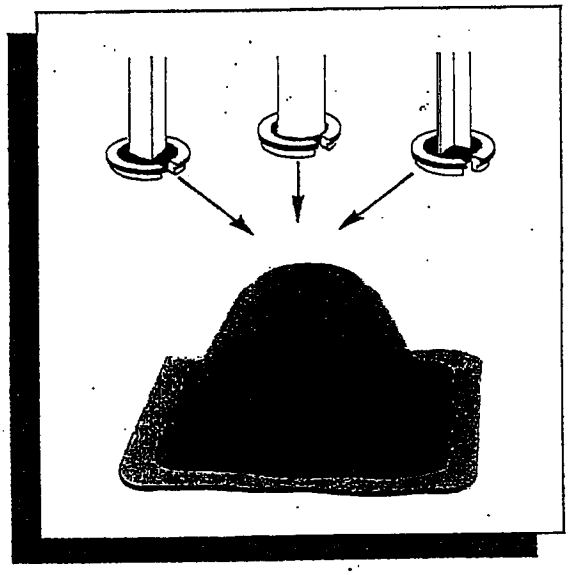

standard color is gray (EPDM)- other colors available

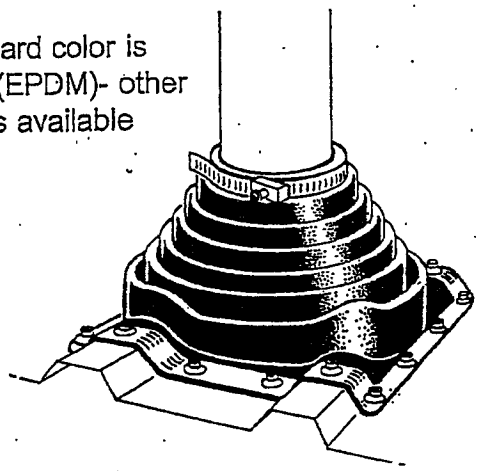

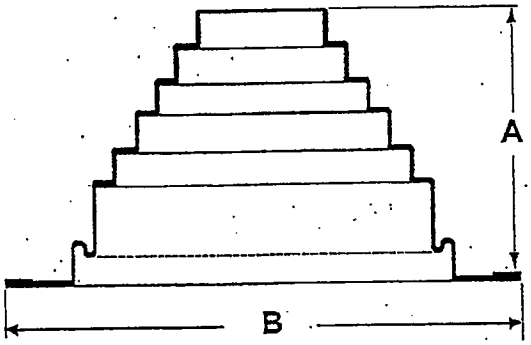

DECK-MATE SIZING CHART

MODEL	SIZE (O.D. of pipe)	A	B
D.M. 0	.125"-.75"	.75"	2.25"
D.M. 1	.25"-2"	3"	4.5"
D.M. 2	1.25"-3"	4"	6"
D.M. 3	.25"-4"	4"	8"
D.M. 4	3"-6"	5"	10"
D.M. 5	4"-7"	5"	11"
D.M. 6	5"-9"	6"	12"
D.M. 7	6"-11"	6"	14"
D.M. 8	7"-13"	6"	17"
D.M. 9	10"-18"	8"	25"
D.M. 10	13"-26"	8"	34"

PORTALS PLUS 484 Thomas Drive, Bensenville, IL 60106 TEL: (800) 624-8642 FAX: (630) 766-5259

© Copyright, June, 2007, Commercial Products Group of Hart & Cooley, Inc. All Rights Reserved. All information is subject to change without notice. Dimensions and specifications shown are within manufacturing tolerances.

Pipe Flashings

Technical Product Information

www.portalsplus.com

Flashings for all size penetrations for single ply roofs

The "Pipe Boot" is an economical flashing designed for single pipe penetrations on single ply rubber and thermoplastic roofs. The unit will accomodate virtually all pipe sizes: 1.75" and 2.75" on Small Pipe Boot, 1" through 6" on Medium Pipe Boot and 8" through 12" on Large Pipe Boot. Pipe Boots are available in EPDM, TPO, PVC, Neoprene, or Hypalon material. The Quadraseal is designed to allow as many as four pipes up to 2" in diameter to pass through one flashing. Quadraseals are available in EPDM material only. The conically shaped steps of the Portals Plus pipe flashing will securely seal all pipes and the large double thick molded rib at the top of each step offers supreme tear resistance and reinforcement, as well as a cutting guide. Utilizing the Pipe Flashings eliminates the workmanship error in field fabrication and makes flashing pipes a clean, consistent approach. Adapters for round, square tube, and angle iron available to fit most pipe boots.

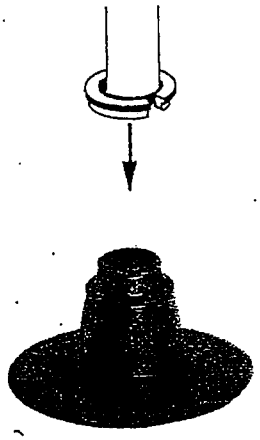

SMALL PIPE BOOT

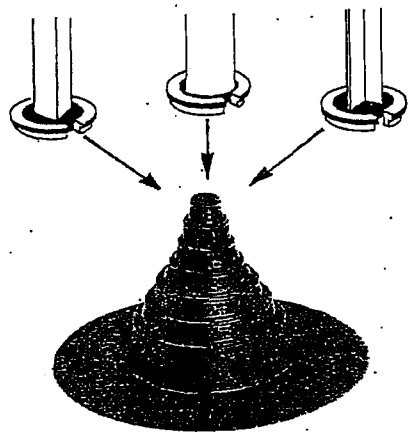

MEDIUM PIPE BOOT

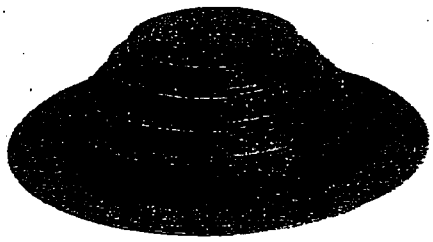

LARGE PIPE BOOT

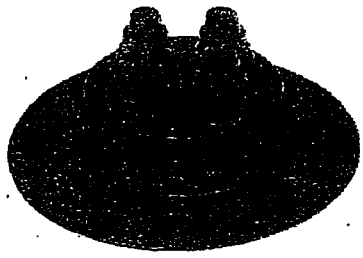

QUADRASEAL 412R

PORTALS PLUS 484 Thomas Drive, Bensenville, IL 60106 TEL: (800) 624-8642 FAX: (630) 766-5259

© Copyright, June, 2007, Commercial Products Group of Hart & Cooley, Inc. All Rights Reserved. All information is subject to change without notice. Dimensions and specifications shown are within manufacturing tolerances.

Premolded Corners

Technical Product Information

www.portalsplus.com

Pre-manufactured inside & outside corners for all roof systems

Outside corners provide a guaranteed, uniform, permanent corner seal. Portals Plus Corners eliminate the cutting, folding, stretching and cementing of materials into unnatural shapes. The Outside Corners have expansion radii molded into the spine to accommodate construction irregularities. All edges on Portals Plus Corners are feathered to allow the best possible adhesion. Outside Corners are available with or without cant and are the true answer to flashing roof curbs and skylight corners.

Inside Corners simplify the difficult detail of terminating roofing materials at corners. All Portals Plus Premolded Corners have seamless molded construction and are essential to a leak-free roof. The flexibility of the unit allows for a secure seal. Reduce the high cost of installation and the even higher cost of callbacks by using Premolded Corners. Fast, positive, watertight corner details are important for preventing costly leaks. 85% of all roof leaks occur at corners or penetrations. Quality flashing accessories are the solution to these costly and damaging leak problems. Corners are available in EPDM, TPO, PVC, or Neoprene material.

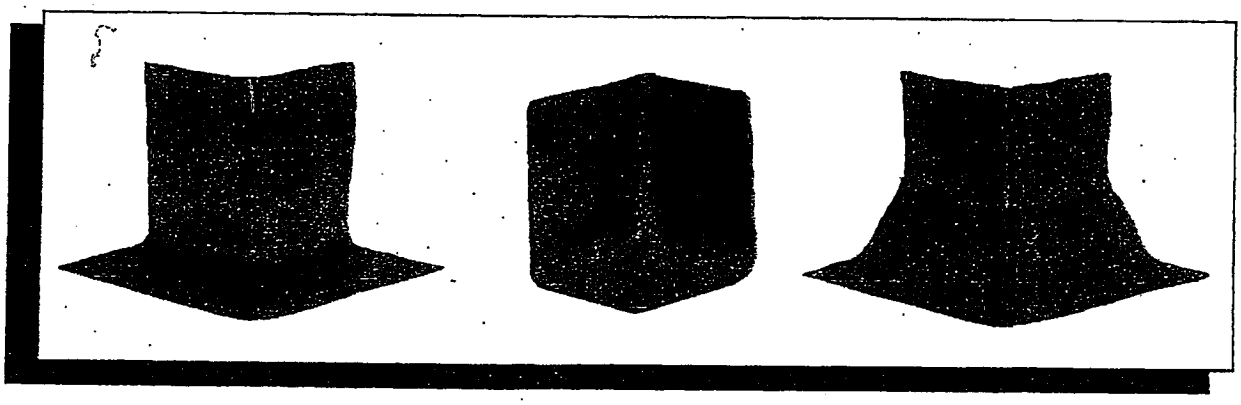

Outside Corner | Inside Corner | Outside Corner with cant

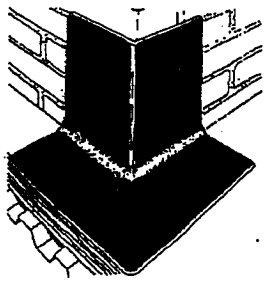

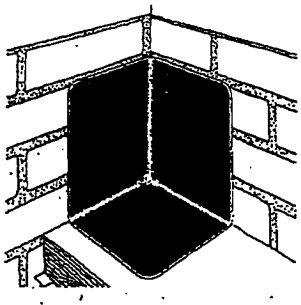

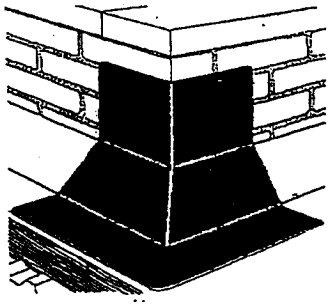

PORTALS PLUS 484 Thomas Drive, Bensenville, IL 60106 TEL: (800) 624-8642 FAX: (630) 766-5259

© Copyright, June, 2007, Commercial Products Group of Hart & Cooley, Inc. All Rights Reserved. All information is subject to change without notice. Dimensions and specifications shown are within manufacturing tolerances.

Shingle Flashing Systems

Technical Product Information

www.portalsplus.com

Flashings for all types of shingle roofs

Portals Plus Shingle Flashings are designed to effectively seal round pipe penetrations, from 1.25" through 4", penetrating shingle roofing systems at up to 40° slopes. The seal is an elastomeric collar integrally locked into a rigid base which remains flat on the roof. Bases are available in 24 gauge galvanized steel, .032 mill finish aluminum, and black thermoplastic. Installation is easy- the Shingle Flashing slips over the pipe and automatically seals to the pipe at the correct roof angle. Pipes can be all types, including copper, cast iron, plastic, aluminum, and galvanized. Shingle Flashings are rated to 180° F continuous heat. Also available is an all elastomeric one piece Shingle Flashing usable to 45° slope and 200° F continous heat. All Portals Plus Shingle Flashings are listed by UPC, SBC, and BOCA- the three major national codes. Shingle Flashings are available to fit the following nominal pipe sizes: 1.25" - 1.5", 2", 3", & 4".

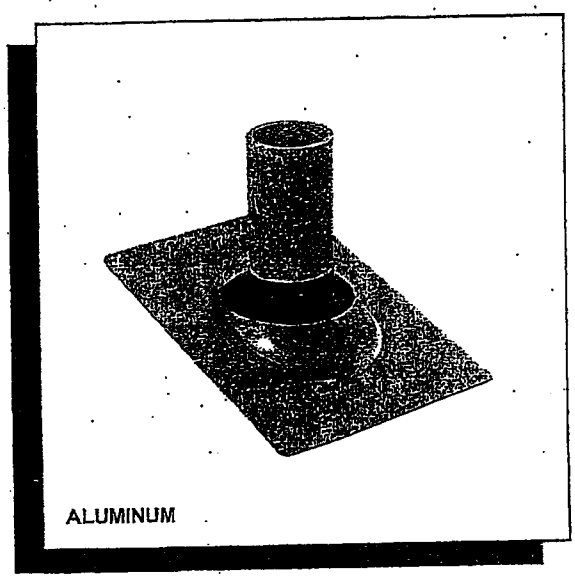

ALUMINUM

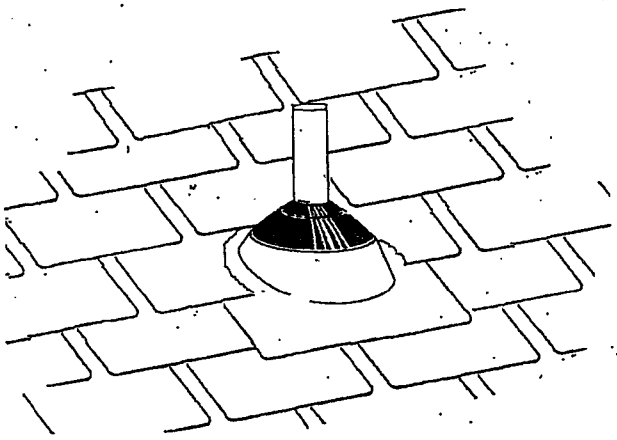

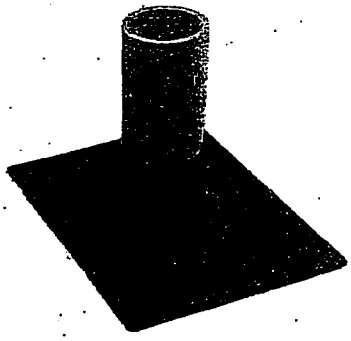

ELASTOMERIC

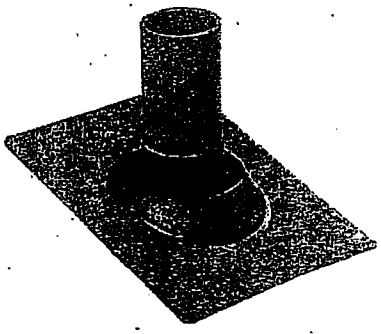

GALVANIZED

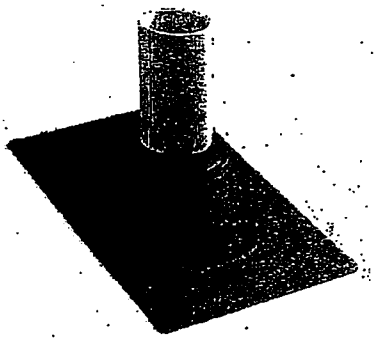

THERMOPLASTIC

PORTALS PLUS 484 Thomas Drive, Bensenville, IL 60106 TEL: (800) 624-8642 FAX: (630) 766-5259

 © Copyright, June, 2007, Commercial Products Group of Hart & Cooley, Inc. All Rights Reserved. All information is subject to change without notice. Dimensions and specifications shown are within manufacturing tolerances.

Vents & Breathers

Technical Product Information

www.portalsplus.com

Relief of trapped moisture in all types of roof systems

Portals Plus insulation Breathers and Vents are used to prevent moisture vapor from becoming trapped in the roof system, equalizing air pressure, reducing the risks of ballooning, blow-off, deteriorating insulation, and separating deck seams. The Portals Plus Vents have a one way valve designed in the unit to prevent moisture from re-entering the roof system. The Portals Plus Breathers allow for both exhaust and convective movement of air between breathers. Both the Breather and Vent are available in heavy gauge spun aluminum or black high-density polyethylene with a locking, vandal proof cap that shields against entry of wind blown rain or snow.

STANDARD ALUMINUM

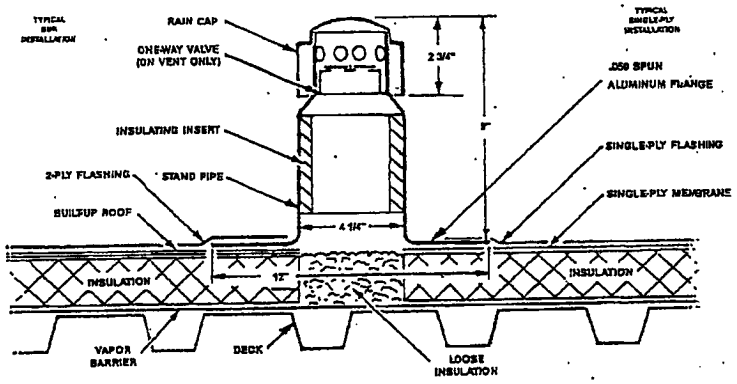

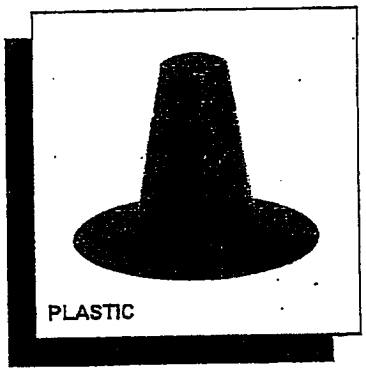

PLASTIC

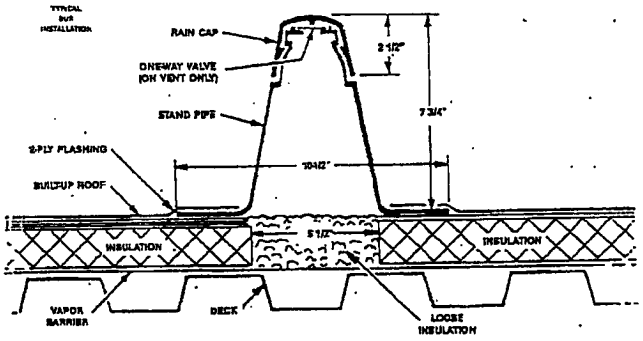

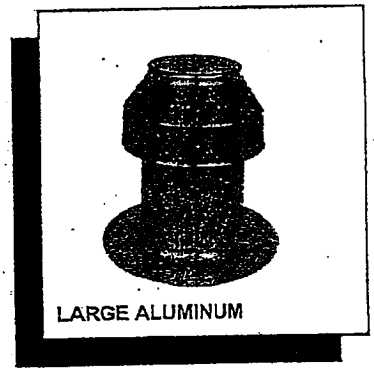

LARGE ALUMINUM

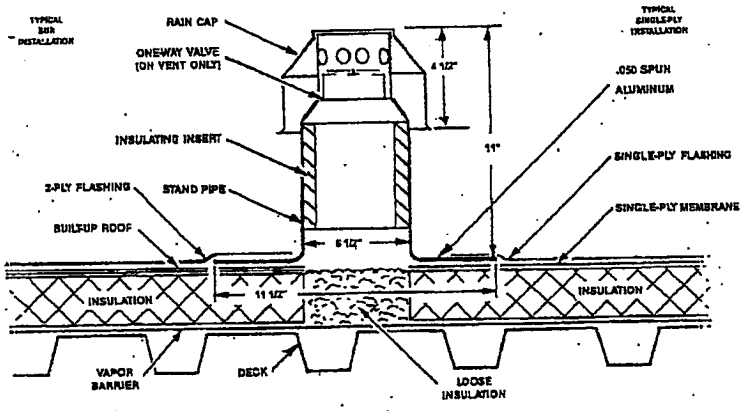

PORTALS PLUS 484 Thomas Drive, Bensenville, IL 60106 TEL: (800) 624-8642 FAX: (630) 766-5259

© Copyright, June, 2007, Commercial Products Group of Hart & Cooley, Inc. All Rights Reserved. All information is subject to change without notice. Dimensions and specifications shown are within manufacturing tolerances.

Expansion Joint Covers

Technical Product Information

www.portalsplus.com

The solution for sealing building joints

Expansion Joint Covers are factory-manufactured flexible, weatherproof, exterior covers for structural expansion joint openings, and are effective closures for a wide variety of special applications. Manufactured of a unique 3-ply flexible reinforced Hypalon bellow supported by a durable closed cell foam, which allows for anticipated movement in the structure, and metal mounting flanges factory locked to each edge of the bellow. Expansion Joint Covers with reinforced Hypalon bellow withstand the most extreme chemical and weather conditions without leakage. Factory-manufactured fitting accessories (corners, tees, end terminations, and crossover intersections) are designed for maximum flexibility and are produced using special techniques to ensure clean seam lines and watertight applications. Field seams are easily accomplished with standard splice kits. For use with all types of roofing- asphalt, coal tar bitumen, modified bitumen, EPDM, TPO, PVC, Hypalon, and most others. Replaces easily torn non-reinforced EPDM and Neoprene covers and easily damaged, bent, and leaky metal covers.

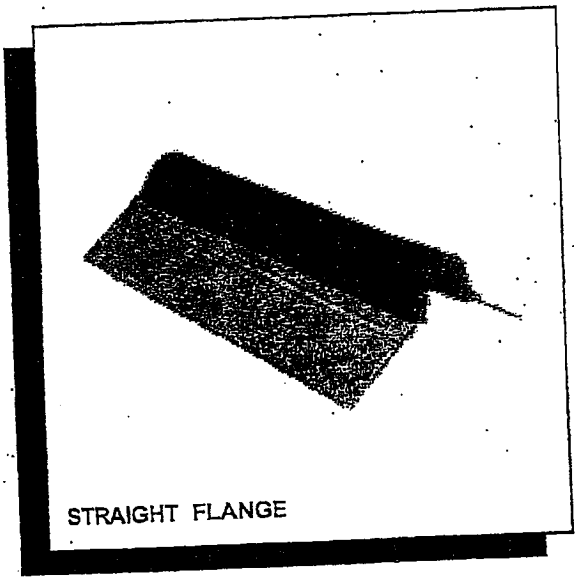

STRAIGHT FLANGE

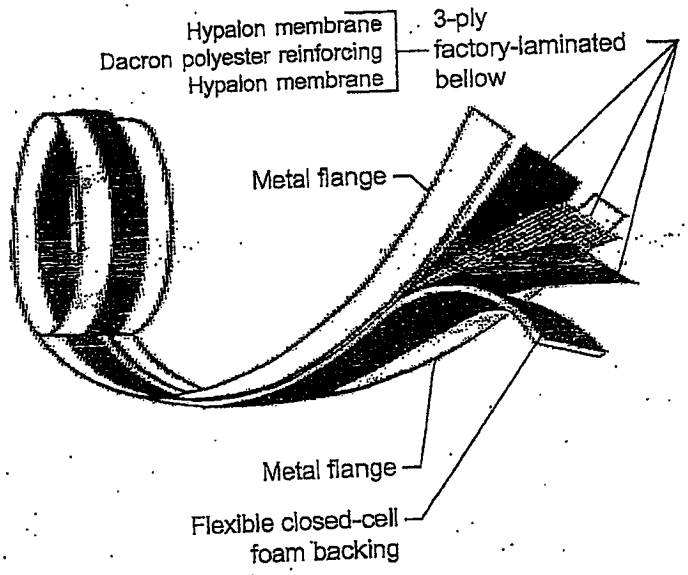

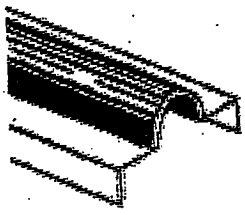

CURB FLANGE
For factory manufactured curb systems or field installed wood curbs

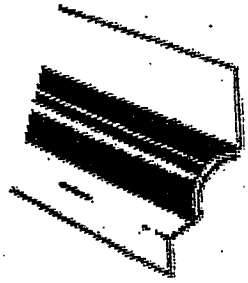

COMBINATION CURB & STRAIGHT FLANGE
For factory manufactured curb systems or field installed wood curbs along walls

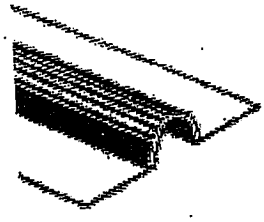

STRAIGHT FLANGE
For low profile installations

Bellow available in the following standard widths- 4", 5", 6", 8", 10", and 12"
Flanges available in the following standard materials- Galvanized Steel, Aluminum, Stainless Steel, and Copper

PORTALS PLUS 484 Thomas Drive, Bensenville, IL 60106 TEL: (800) 624-8642 FAX: (630) 766-5259

© Copyright, June, 2007, Commercial Products Group of Hart & Cooley, Inc. All Rights Reserved. All information is subject to change without notice. Dimensions and specifications shown are within manufacturing tolerances.

EXPANSION JOINT USE

Roof Expansion Joints are recommended to be provided for any one or more of the following minimum conditions.

- When the roof size exceeds 200 feet in any direction
- At all structural expansion or contraction joints
- Where the deck material changes, for example from steel to concrete
- Where the deck material or structural framing changes direction
- Where building wings intersect, such as "U", "T", or "L" shapes
- Where interior heating and cooling conditions change, such as between heated and unheated
- At all building additions of any shape
- Where differential movement between walls and decks may occur

Roof Expansion Joints are recommended to be constructed with raised curb assemblies, which can allow adequate base flashing details for the roof system. Raised curb assemblies can be factory fabricated of galvanized steel to suit all project conditions, which expedites and unifies project design and installation, as opposed to traditional wood curbs, which require extensive field installation time and thorough inspection of construction and attachment.

Over the raised curb assemblies, or at low profile expansion assemblies, the Portals Plus Expansion Joint Covers provide superior watertight integrity. Along with the standard cover profiles of Curb Flange, Combination Curb & Straight Flange, and Straight Flange, Portals Plus offers factory manufactured accessories available to suit virtually any project condition. The most common accessories are Corners, Intersections, and Ends. All factory manufactured accessories are custom made to suit each individual project's conditions, thereby assuring clean seam lines, continuity of joint material, and watertight integrity when properly spliced with Portals Plus standard splice kits. Contact Portals Plus for questions regarding any special details or applications.

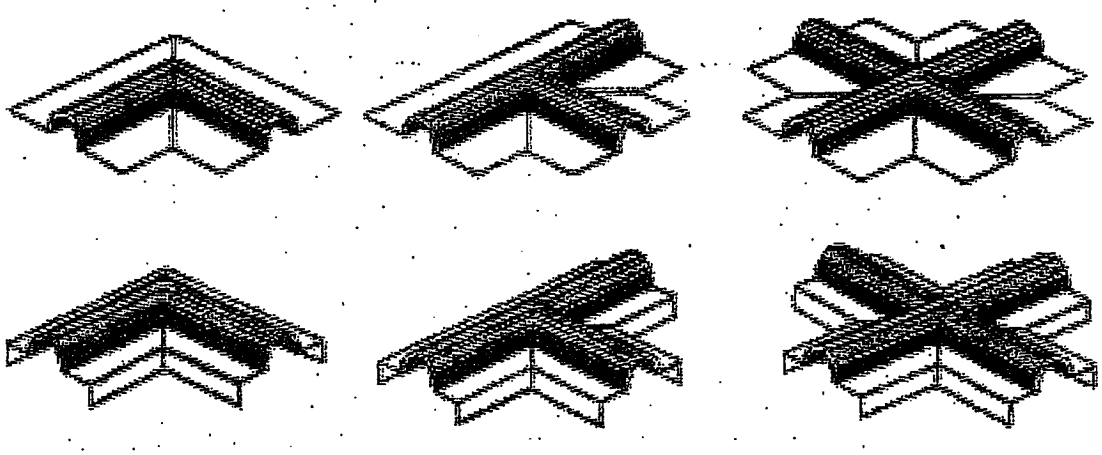

TYPICAL FACTORY MANUFACTURED CORNERS AND INTERSECTIONS

© Copyright, June, 2007, Commercial Products Group of Hart & Cooley, Inc. All Rights Reserved. All information is subject to change without notice. Dimensions and specifications shown are within manufacturing tolerances.

Standard Roof Hatch

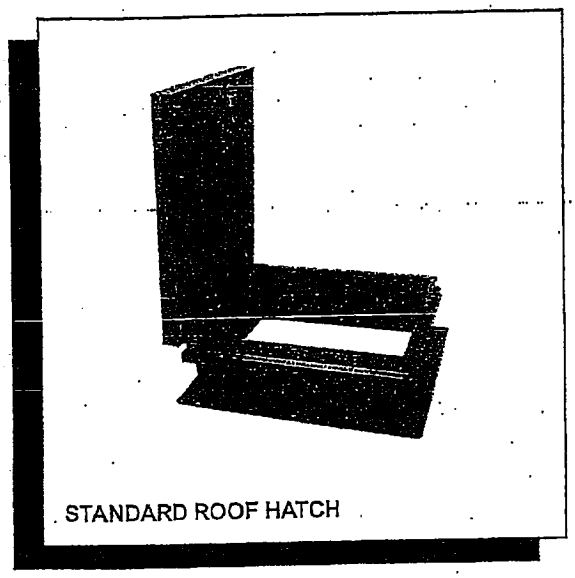

STANDARD ROOF HATCH

The Standard Roof Hatch is compatible with all types of roof systems and provides convenient, weathertight access to the roof. Cover opens easily to a full 90°, assisted by a torsion spring, and remains open with an automatic hold-open arm. The standard roof hatch provides a virtually unobstructed opening- only a narrow hold-open arm is tucked into one corner of the frame. When closed, the roof hatch is sealed with a heavy, mechanically applied weather seal to provide a barrier to weather and drafts. A latch with both inside and outside handles tightly secures the closed hatch. The standard hatch is available in prime-painted galvanized steel curb & cover or aluminum curb & cover. Covers and curbs are fully insulated.

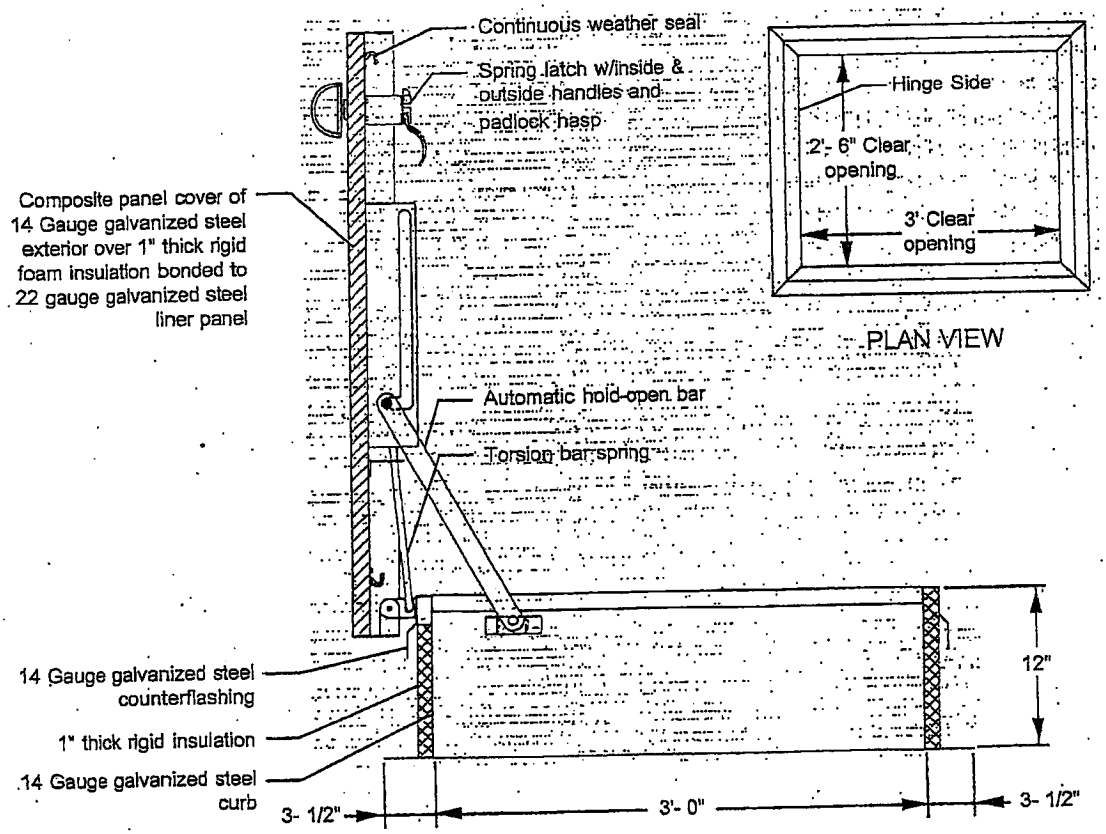

© Copyright, June, 2007, Commercial Products Group of Hart & Cooley, Inc. All Rights Reserved. All information is subject to change without notice. Dimensions and specifications shown are within manufacturing tolerances.

AS HOLDINGS, INC.
v. H&C MILCOR, INC.
Opposition No. 91182064
OPPOSER'S EXHIBIT
3

Pipe Flashings

Technical Product Information

Medium Pipe Boot

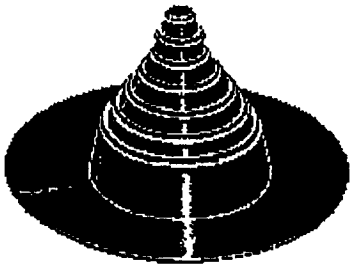

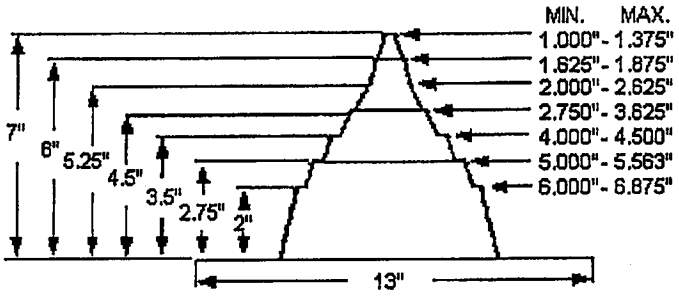

SPECIFICATION

Furnish and install the Portals Plus Medium Pipe Boot as manufactured by Portals Plus, Inc., Bensenville, IL, at all points where any projection penetrates the roof system, and is less than 6" in diameter. The Medium Pipe Boot shall include 60 mil EPDM, NEOPRENE, or HYPALON compression molded body. The Medium Pipe Boot shall also include Portals Plus' Snaplock Clamp. Whenever necessary utilize Portals Plus Adapters to seal to square tubing and angle iron and for round penetrations less than 1" in diameter. Use white or black as necessary. Attachment of Medium Pipe Boot to roof system shall be done in accordance with Portals Plus Installation Instructions and the roofing membrane manufacturer's requirements.

NEW UPC PART NUMBER	DESCRIPTION	QTY/CTN	LIST PRICE PER UNIT
42110	MEDIUM - BLACK EPDM	10	**$ 26.95**
42140	MEDIUM - WHITE EPDM	10	**$ 32.55**
43170	MEDIUM - BLACK NEOPRENE	10	**$ 40.70**
44170	MEDIUM - WHITE HYPALON*	10	**$ 31.85**

* - AVAILABLE ON A LIMITED BASIS

Quadraseals.
Adapter Rings.
Installation Instructions.
CAD Page

Other Flashing Systems:
Pipe Portals
Double Pipe Portals
Alumi-Flash

Main Page

PORTALS PLUS 484 N. Thomas Drive, Bensenville, IL 60106 TEL: (630) 595-7320 FAX: (630) 766-5259

All information is subject to change without notice. Dimensions and specifications shown are within manufacturing tolerances.
© Copyright Commercial Products Group of Hart & Cooley, Inc., July, 2008. All Rights Reserved.

Opposer
EXHIBIT
3 I.D.
10-3-08 S.O.D.

ALP00476

AS HOLDINGS, INC.
v. H&C MILCOR, INC.
Opposition No. 91182064
OPPOSER'S EXHIBIT
4

Pipe Flashings

Technical Product Information

Medium Pipe Boot

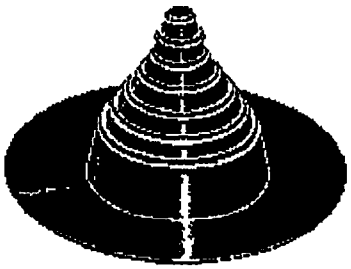

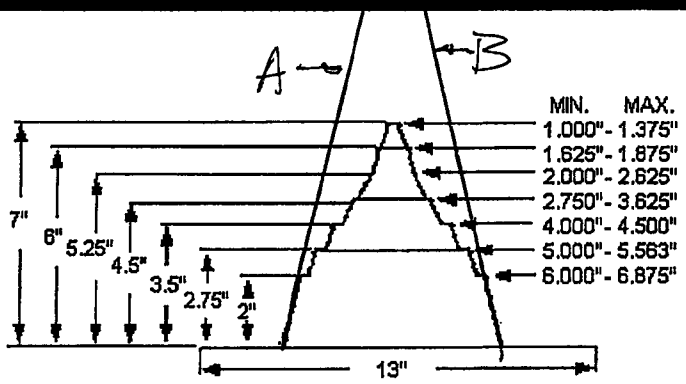

SPECIFICATION

Furnish and install the Portals Plus Medium Pipe Boot as manufactured by Portals Plus, Inc., Bensenville, IL, at all points where any projection penetrates the roof system, and is less than 6" in diameter. The Medium Pipe Boot shall include 60 mil EPDM, NEOPRENE, or HYPALON compression molded body. The Medium Pipe Boot shall also include Portals Plus' Snaplock Clamp. Whenever necessary utilize Portals Plus Adapters to seal to square tubing and angle iron and for round penetrations less than 1" in diameter. Use white or black as necessary. Attachment of Medium Pipe Boot to roof system shall be done in accordance with Portals Plus Installation Instructions and the roofing membrane manufacturer's requirements.

NEW UPC PART NUMBER	DESCRIPTION	QTY/CTN	LIST PRICE PER UNIT
42110	MEDIUM - BLACK EPDM	10	**$ 26.95**
42140	MEDIUM - WHITE EPDM	10	**$ 32.55**
43170	MEDIUM - BLACK NEOPRENE	10	**$ 40.70**
44170	MEDIUM - WHITE HYPALON*	10	**$ 31.85**

* - AVAILABLE ON A LIMITED BASIS

Quadraseals.
Adapter Rings.
Installation Instructions.
CAD Page

Other Flashing Systems:
Pipe Portals
Double Pipe Portals
Alumi-Flash

Main Page

PORTALS PLUS 484 N. Thomas Drive, Bensenville, IL 60106 TEL: (630) 595-7320 FAX: (630) 766-5259

All information is subject to change without notice. Dimensions and specifications shown are within manufacturing tolerances.
© Copyright Commercial Products Group of Hart & Cooley, Inc., July, 2008. All Rights Reserved.

Opposer's
EXHIBIT
#4 I.D.
10-3-08 S.O'D

ALP00476

AS HOLDINGS, INC.
v. H&C MILCOR, INC.
Opposition No. 91182064
OPPOSER'S EXHIBIT
5

We don't have a blimp (yet) but you can still find us anywhere.

From the basement to the roof — and everything in between — the Commercial Products Group (CPG) of Hart & Cooley, Inc. helps you make the right air distribution connections at the right time.

Top-of-the-line products
The following brands and products are available with one call.

Ward Industries: Duct Accessories and Fire Dampers
AMPCO: Boiler & Generator Flues and Grease Duct
Milcor: Roof Hatches and Fire-rated Access Doors
Portals Plus: Roof Flashings
Roof Products & Systems: Roof Curbs and Rails

Top-flight delivery
The CPG program provides immediate access to a complete range of products, backed by a timely order processing and distribution system that delivers directly to the work site to keep work moving.

Top-notch support
As a CPG customer, you're connected to an experienced field team with wide-ranging expertise to help you with specs, accessories, ordering, deliveries — whatever you need to keep your program moving forward.

Stay on top
Success is the ability to take advantage of opportunity. The Commercial Products Group of Hart & Cooley, Inc. is your opportunity to stay on top with a comprehensive line of products and a solid support network. Make the connection. Go to www.commercialproductsgroup.com or call 1-800-624-8642.

www.commercialproductsgroup.com

Opposer's
EXHIBIT
#5 IP
10-3-08 S.O.D.

CPG COMMERCIAL PRODUCTS GROUP
a division of Hart & Cooley, Inc.

WARD INDUSTRIES AMPCO MILCOR PORTALS PLUS

FREE INFO: 98

SMACNA, HARDI meeting highlights

snips

JANUARY 2008
VOL. 77 • NO. 1
www.snipsmag.com
A bnp PUBLICATION

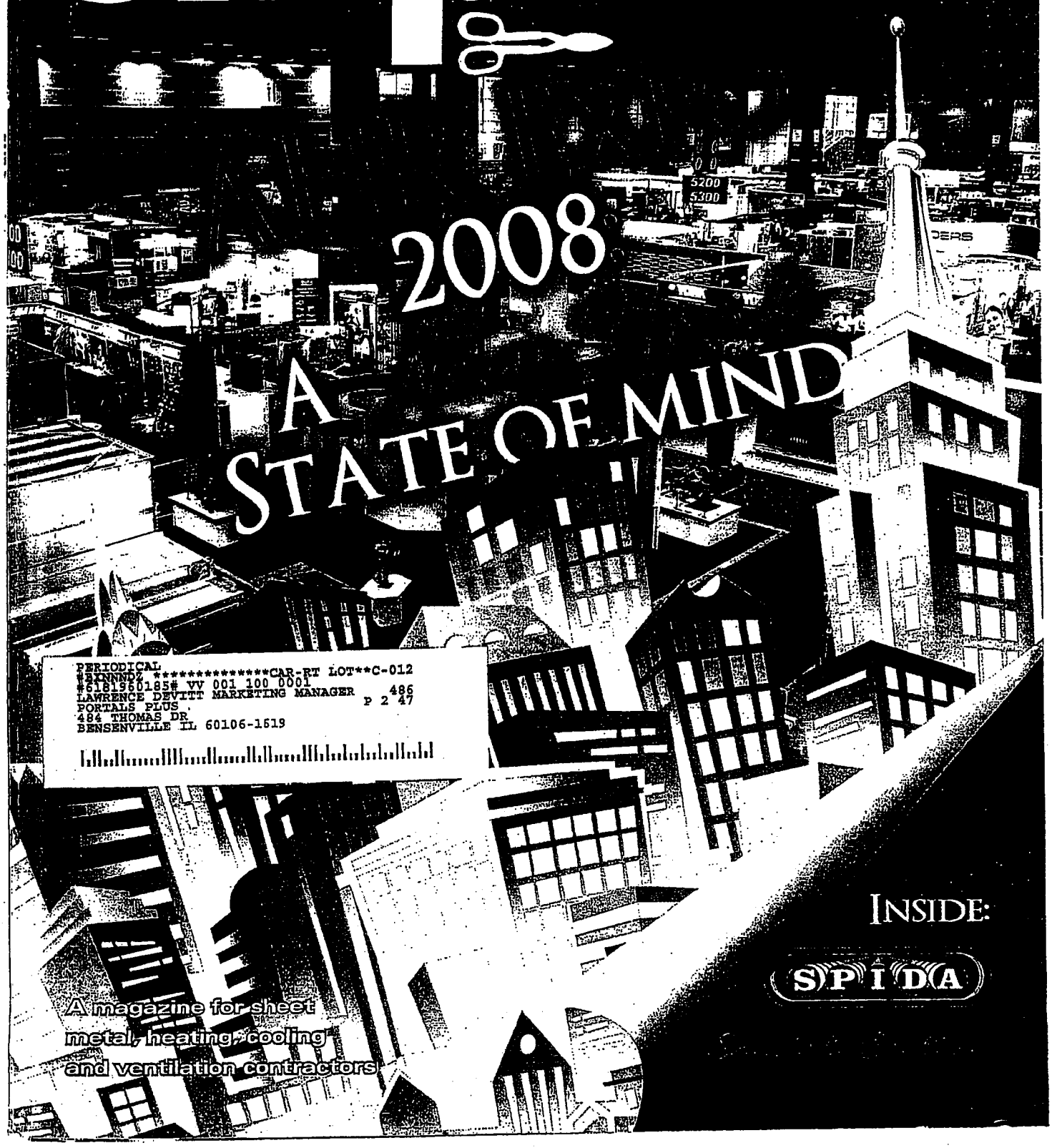

2008 A STATE OF MIND

PERIODICAL
#BXNNNDZ **********CAR-RT LOT**C-012
#6181960185# VV 001 100 0001
LAWRENCE DEVITT MARKETING MANAGER 486
PORTALS PLUS . P 2 47
484 THOMAS DR
BENSENVILLE IL 60106-1619

INSIDE:

SPIDA

A magazine for sheet metal, heating, cooling and ventilation contractors

Installation Instructions

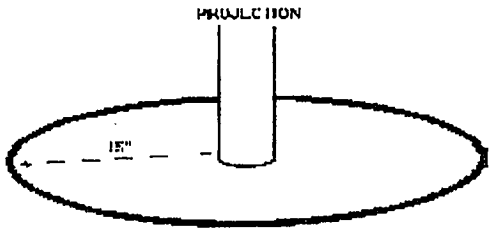

STEP 1
Clean and prepare surface 15" in all directions from the penetration. Check with roofing manufacturer to determine if any special preparations are required.

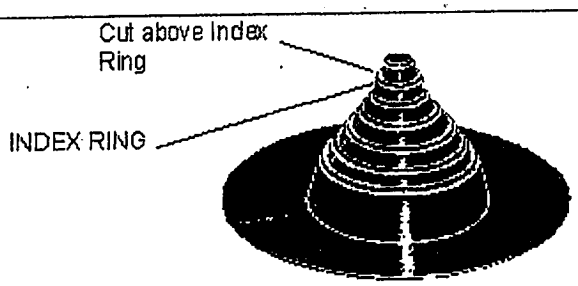

STEP 2
Select proper step of the flashing and cut off above index ring. REMEMBER: When in doubt, cut the smaller size. Clean and prime flange in accordance with roofing manufacturer's recommendations.

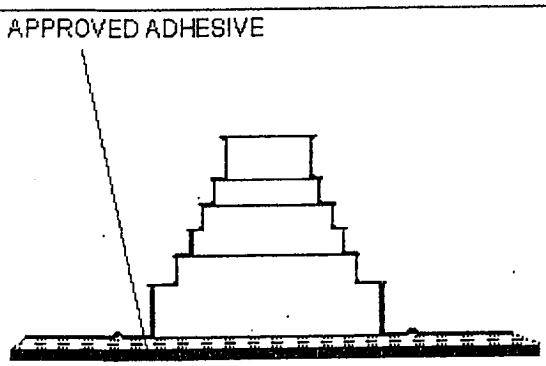

STEP 3
Apply roofing manufacturers' specified adhesive on base flange of boot and place boot around projection and complete attachment of flashing to roofing, according to roofing manufacturers' specification.

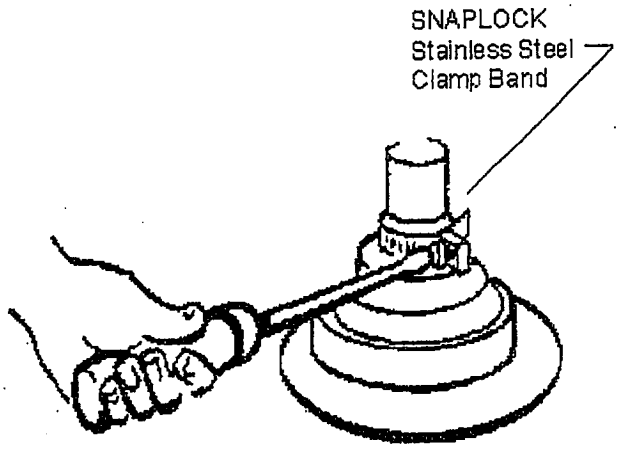

STEP 4
Using the Stainless Steel SnapLock Clamp, place at top of boot and tighten to projection.

PORTALS PLUS 484 N. Thomas Drive, Bensenville, IL 60106 TEL: (630) 595-7320 FAX: (630) 766-5259

All information is subject to change without notice. Dimensions and specifications shown are within manufacturing tolerances.
© Copyright Commercial Products Group of Hart & Cooley, Inc., January, 2008. All Rights Reserved.

AS HOLDINGS, INC.
v. H&C MILCOR, INC.
Opposition No. 91182064
OPPOSER'S EXHIBIT
6

Opposer's
EXHIBIT
6 I.D.
10-3-08 S.O'D

ALP00479

RPS ACCESSORIES

484 N. Thomas Dr.
Bensenville, IL 60106
(630) 595-7320

2-5 Day Lead Time With No Premium!

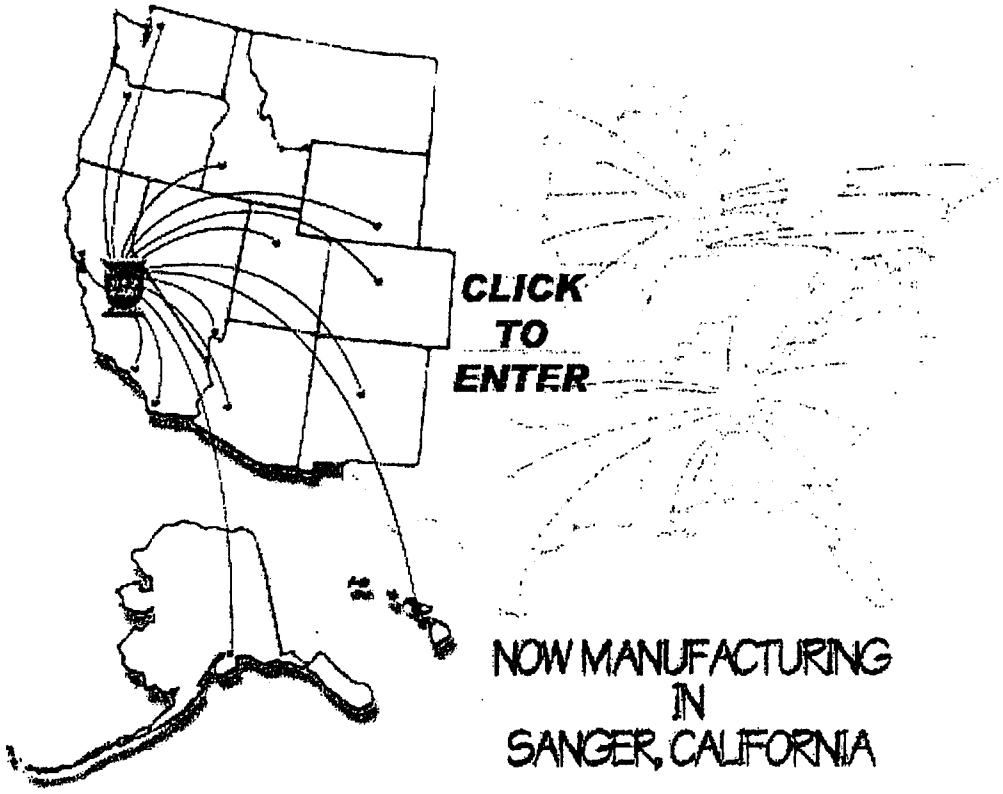

ALSO SEE OUR OTHER ROOFTOP ACCESSORIES FOR COMPLETE ROOFTOP SOLUTIONS !

MILCOR

Roof Access Hatches and Heat & Smoke Vents

PORTALS PLUS

Flashings, Drains, ReRoof Drains, Expansion Joint Covers, and Vents

Commercial Products Group 484 N. Thomas Drive, Bensenville, IL 60106
TEL: 630-595-7320 FAX: 630-766-5259

Opposer's

AS HOLDINGS, INC.
v. H&C MILCOR, INC.
Opposition No. 91182064
OPPOSER'S EXHIBIT
7

EXHIBIT
7 I.D
10-3-08 S.O.D

ALP00458

MILCOR

The Milcor Family of Companies

Milcor specializes in manufacturing Heat & Smoke vents, Roof Access Hatches, and Access Doors available nationwide through a network of local stocking wholesale distributors.

Portals Plus specializes in stock rooftop accessory products for the roofing, HVACR, and plumbing trades. All Portals Plus products are available nationwide through a network of local stocking wholesale distributors.

Roof Products & Systems (RPS) specializes in custom manufactured roof curbs and supports for HVACR. All RPS products are available nationwide through a network of local representatives.

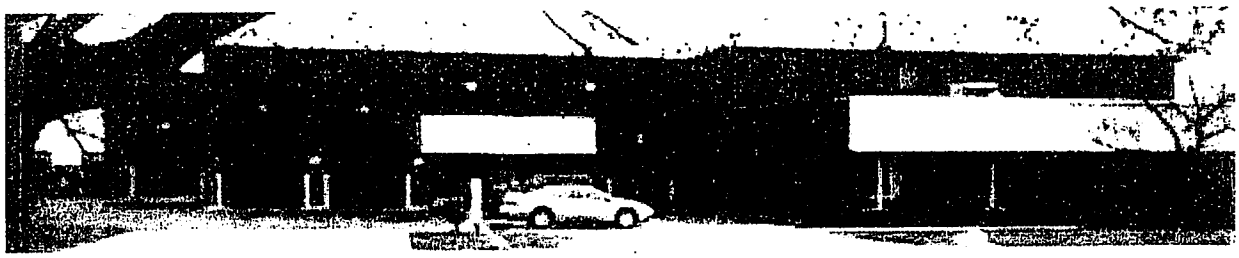

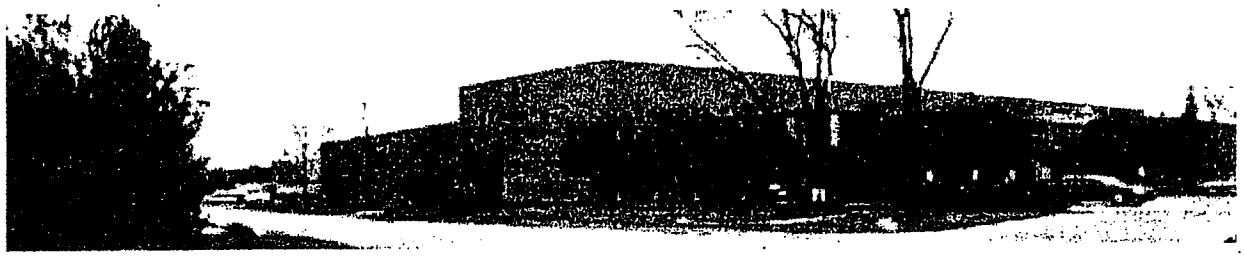

ALP00460

ALSO SEE OUR OTHER ROOFTOP ACCESSORIES FOR COMPLETE ROOFTOP SOLUTIONS !

PORTALS PLUS

MILCOR

Roof Access Hatches and Heat & Smoke Vents

Custom-manufactured Curbs, Equipment Supports, and Pipe & Duct Supports

- Product Search
- Specification Wizard
- CAD Details
- Continuing Education
- Product Information
- Part Number Search
- Installation
- Warranty
- Submittal Sheets
- Contacts

Portals Plus manufactures solutions for roof leak problems. Roof leaks are the biggest problem of architects and building owners. 85% of all roof leaks occur at penetrations and corners due to poor details which fail to accommodate movement. Extreme roof temperature swings require durable and flexible flashings. However, high labor costs and low common denominator standards create conditions for poor workmanship and non-functional field fabricated flashings. A "good enough" attitude creates temporary expedients, such as pitch pockets or pans and their derivatives, but at the building owner's ongoing expense. The National Roofing Contractors Association (NRCA) states that "Pitch pockets or pans by their design, are not intended to be continuously watertight. Their use should not be encouraged since better methods are available to accomplish the same end. Pitch pans or pockets require frequent inspection and maintenance, and usually a great deal of damage can occur before the leak around a pitch pocket or pan is evident."

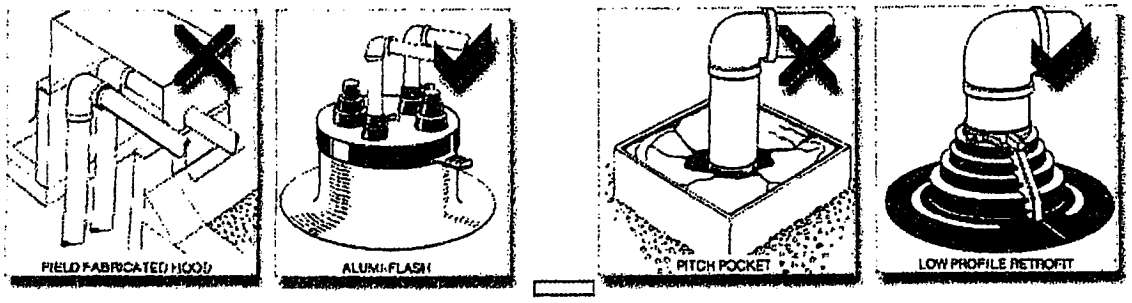

ALP00461

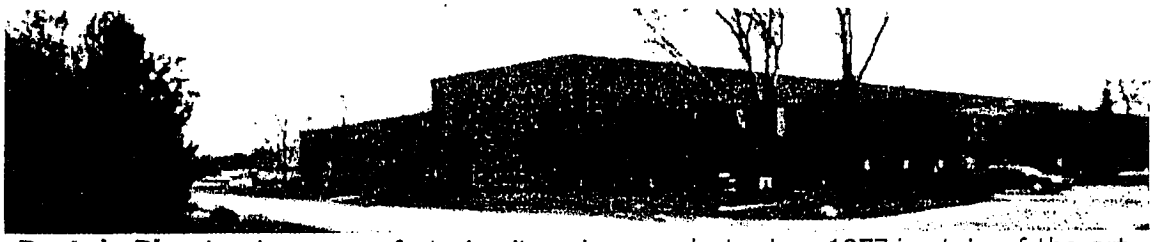

Portals Plus has been manufacturing its unique products since 1977 in state-of-the-art manufacturing facilities in the Chicago suburbs.

Portals Plus products are readily available across the USA and Canada through a network of local stocking wholesale distributors. Call 800-624-8642 or 630-595-7320 for the stocking distributor near you or for international availability.

Commercial Products Group 484 N. Thomas Drive, Bensenville, IL 60106
TEL. 630-595-7320 FAX: 630-766-5259
portalsplus@portalsplus.com

[illegible] Inc. January 2008 All Rights Reserved

ALP00462

Product Selection

AS HOLDINGS, INC.
v. H&C MILCOR, INC.
Opposition No. 91182064
OPPOSER'S EXHIBIT
8

SINGLE PIPE PORTAL SYSTEM

Pipe Portal System - for one to eight penetrations in one watertight unit. The Pipe Portal System is a versatile, leak proof, and weathertight solution to routing pipes through a roof. The Pipe Portal System is designed to allow both horizontal and vertical pipe movement, yet provide a maintenance-free permanent installation which accommodates penetrations from 3/8" round through 12" round, and, with Portals Plus Adapter Rings, angle irons and square tubes, as well. Compression molded EPDM rubber caps provide the flexible seal at each penetration. Stainless Snaplock Clamps provide an added measure of assurance at each penetration. The flexible EPDM caps are mechanically sealed to the Pipe Portal cover by a double "Weather-Tite Pressure Seal", which consists of two beads formed into the collar of the cover that mate with double grooves molded into the inside of the cap. The curb cover is molded of one piece ultraviolet-resistant ABS plastic and laminated with an acrylic coating for extra protection. This manufacturing process creates exposed materials that are both ozone and ultraviolet resistant with a serviceable temperature range of -40F to +160F. To complete the system, the roof curb is fabricated from heavy 18 gauge galvanized iron with mitered and welded corners and insulated on all four sides. The Pipe Portal System allows roofing membranes and base flashings to be installed in accordance with the National Roofing Contractors Association (NRCA) recommendations.

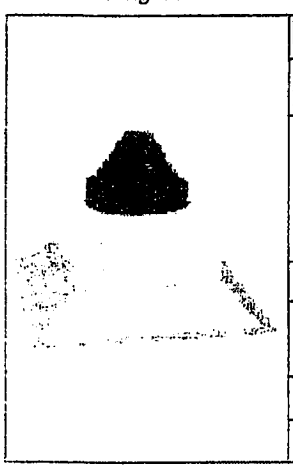

PIPE PORTAL® (Cover, Black Cap & Clamps) RC-3A

NEW UPC PART NUMBER	DESCRIPTION	QTY/CTN	LIST PRICE PER UNIT
32005 32015 32025 32035	w/ 126 BLACK CAP (1 - 2" to 6" pipe) w/ 212 BLACK CAP (2 - .375" to 1 & 2 - 1" - 2" pipes) w/ 412 BLACK CAP (4 - 1" to 2" pipes) w/ 481 BLACK CAP (4 - .375" to 1" pipes)	5	$ 96.80
32041	w/ 182 BLACK CAP (1 - 8" to 12" pipe)	1	$ 154.40
32055 32065	w/ 126 WHITE CAP (1 - 2" to 6" pipe) w/ 212 WHITE CAP (2 - .375" to 1 & 2 - 1" - 2" pipes)	5	$ 98.00
32111	SMALL RC-3A CANTED CURB - 8" High	1	$ 104.00
32141	LARGE RC-3A CANTED CURB - 8" High	1	$ 199.00

See more information about the caps.

SINGLE PIPE PORTAL SYSTEM

Pipe Portal System - for one to eight penetrations in one watertight unit. The Pipe Portal System is a versatile, leak proof, and weathertight solution to routing pipes through a roof. The Pipe Portal System is designed to allow both horizontal and vertical pipe movement, yet provide a maintenance-free permanent installation which accommodates penetrations from 3/8" round through 12" round, and, with Portals Plus Adapter Rings, angle irons and square tubes, as well. Compression molded EPDM rubber caps provide the flexible seal at each penetration. Stainless Snaplock Clamps provide an added measure of assurance at each penetration. The flexible EPDM caps are mechanically sealed to the Pipe Portal cover by a double "Weather-Tite Pressure Seal", which consists of two beads formed into the collar of the cover that mate with double grooves molded into the inside of the cap. The curb cover is molded of one piece ultraviolet-resistant ABS plastic and laminated with an acrylic coating for extra protection. This manufacturing process creates exposed materials that are both ozone and ultraviolet resistant with a serviceable temperature range of -40F to +160F. To complete the system, the roof curb is fabricated from heavy 18 gauge galvanized iron with mitered and welded corners and insulated on all four sides. The Pipe Portal System allows roofing membranes and base flashings to be installed in accordance with the National Roofing Contractors Association (NRCA) recommendations.

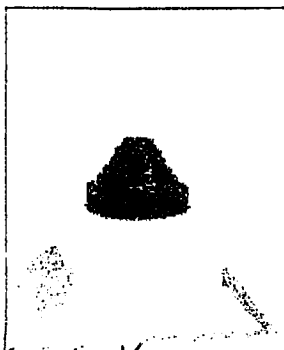

PIPE PORTAL® (Cover, Black Cap & Clamps) RC-4A

NEW UPC PART NUMBER	DESCRIPTION	QTY/CTN	LIST PRICE PER UNIT
32005 32015 32025 32035	w/ 126 BLACK CAP (1 - 2" to 6" pipe) w/ 212 BLACK CAP (2 - .375" to 1 & 2 - 1" - 2" pipes) w/ 412 BLACK CAP (4 - 1" to 2" pipes) w/ 481 BLACK CAP (4 - .375" to 1" pipes)	5	$ 96.80
32041	w/ 182 BLACK CAP (1 - 8" to 12" pipe)	1	$ 154.40
32055 32065	w/ 126 WHITE CAP (1 - 2" to 6" pipe) w/ 212 WHITE CAP (2 - .375" to 1 & 2 - 1" - 2" pipes)	5	$ 98.00
32121	SMALL RC-4A RAISED CANTED CURB -9 1/2" High	1	$ 104.00

Opposer's

EXHIBIT
#8 IND

ALP00463

	32151	LARGE RC-4A RAISED CANTED CURB -9 1/2" High	1	$ 199.00

DOUBLE PIPE PORTAL SYSTEM

Pipe Portal System - for one to eight penetrations in one watertight unit. The Pipe Portal System is a versatile, leak proof, and weathertight solution to routing pipes through a roof. The Pipe Portal System is designed to allow both horizontal and vertical pipe movement, yet provide a maintenance-free permanent installation which accommodates penetrations from 3/8" round through 12" round, and, with Portals Plus Adapter Rings, angle irons and square tubes, as well. Compression molded EPDM rubber caps provide the flexible seal at each penetration. Stainless Snaplock Clamps provide an added measure of assurance at each penetration. The flexible EPDM caps are mechanically sealed to the Pipe Portal cover by a double "Weather-Tite Pressure Seal", which consists of two beads formed into the collar of the cover that mate with double grooves molded into the inside of the cap. The curb cover is molded of one piece ultraviolet-resistant ABS plastic and laminated with an acrylic coating for extra protection. This manufacturing process creates exposed materials that are both ozone and ultraviolet resistant with a serviceable temperature range of -40F to +160F. To complete the system, the roof curb is fabricated from heavy 18 gauge galvanized iron with mitered and welded corners and insulated on all four sides. The Pipe Portal System allows roofing membranes and base flashings to be installed in accordance with the National Roofing Contractors Association (NRCA) recommendations.

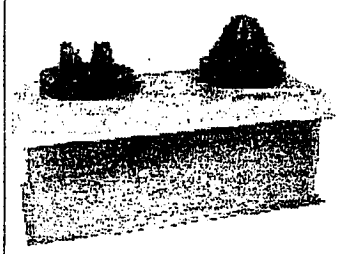

DOUBLE PIPE PORTAL® (Cover, Cap & Clamps) RC-2A

NEW UPC PART NUMBER	DESCRIPTION	QTY/CTN	LIST PRICE PER UNIT
36002	DOUBLE COVER & CAPS w/126 & 212 BLACK CAP	2	$ 293.00
36012	DOUBLE COVER & CAPS w/126 & 412 BLACK CAP		
36022	DOUBLE COVER & CAPS w/126 & 481 BLACK CAP		
36032	DOUBLE COVER & CAPS w/126 & 126 BLACK CAP		
36042	DOUBLE COVER & CAPS w/212 & 212 BLACK CAP		
36052	DOUBLE COVER & CAPS w/212 & 412 BLACK CAP		
36062	DOUBLE COVER & CAPS w/212 & 481 BLACK CAP		
36092	DOUBLE COVER & CAPS w/412 & 412 BLACK CAP		
36102	DOUBLE COVER & CAPS w/412 & 481 BLACK CAP		
36142	DOUBLE COVER & CAPS w/481 & 481 BLACK CAP		
32161	DOUBLE RC-2A STRAIGHT SIDED CURB -11" High	1	$ 220.00

See more information about the caps.

DOUBLE PIPE PORTAL SYSTEM

Pipe Portal System - for one to eight penetrations in one watertight unit. The Pipe Portal System is a versatile, leak proof, and weathertight solution to routing pipes through a roof. The Pipe Portal System is designed to allow both horizontal and vertical pipe movement, yet provide a maintenance-free permanent installation which accommodates penetrations from 3/8" round through 12" round, and, with Portals Plus Adapter Rings, angle irons and square tubes, as well. Compression molded EPDM rubber caps provide the flexible seal at each penetration. Stainless Snaplock Clamps provide an added measure of assurance at each penetration. The flexible EPDM caps are mechanically sealed to the Pipe Portal cover by a double "Weather-Tite Pressure Seal", which consists of two beads formed into the collar of the cover that mate with double grooves molded into the inside of the cap. The curb cover is molded of one piece ultraviolet-resistant ABS plastic and laminated with an acrylic coating for extra protection. This manufacturing process creates exposed materials that are both ozone and ultraviolet resistant with a serviceable temperature range of -40F to +160F. To complete the system, the roof curb is fabricated from heavy 18 gauge galvanized iron with mitered and welded corners and insulated on all four sides. The Pipe Portal System allows roofing membranes and base flashings to be installed in accordance with the National Roofing Contractors Association (NRCA) recommendations.

DOUBLE PIPE PORTAL® (Cover, Cap & Clamps) RC-3A

NEW UPC PART NUMBER	DESCRIPTION	QTY/CTN	LIST PRICE PER UNIT

36002 36012 36022 36032 36042 36052 36062 36092 36102 36142	DOUBLE COVER & CAPS w/126 & 212 BLACK CAP DOUBLE COVER & CAPS w/126 & 412 BLACK CAP DOUBLE COVER & CAPS w/126 & 481 BLACK CAP DOUBLE COVER & CAPS w/126 & 126 BLACK CAP DOUBLE COVER & CAPS w/212 & 212 BLACK CAP DOUBLE COVER & CAPS w/212 & 412 BLACK CAP DOUBLE COVER & CAPS w/212 & 481 BLACK CAP DOUBLE COVER & CAPS w/412 & 412 BLACK CAP DOUBLE COVER & CAPS w/412 & 481 BLACK CAP DOUBLE COVER & CAPS w/481 & 481 BLACK CAP	2	**$ 293.00**
32171	DOUBLE RC-3A CANTED CURB - 8" High	1	**$ 220.00**

See more information about the caps.

DOUBLE PIPE PORTAL SYSTEM

Pipe Portal System - for one to eight penetrations in one watertight unit. The Pipe Portal System is a versatile, leak proof, and weathertight solution to routing pipes through a roof. The Pipe Portal System is designed to allow both horizontal and vertical pipe movement, yet provide a maintenance-free permanent installation which accommodates penetrations from 3/8" round through 12" round, and, with Portals Plus Adapter Rings, angle irons and square tubes, as well. Compression molded EPDM rubber caps provide the flexible seal at each penetration. Stainless Snaplock Clamps provide an added measure of assurance at each penetration. The flexible EPDM caps are mechanically sealed to the Pipe Portal cover by a double "Weather-Tite Pressure Seal", which consists of two beads formed into the collar of the cover that mate with double grooves molded into the inside of the cap. The curb cover is molded of one piece ultraviolet-resistant ABS plastic and laminated with an acrylic coating for extra protection. This manufacturing process creates exposed materials that are both ozone and ultraviolet resistant with a serviceable temperature range of -40F to +160F. To complete the system, the roof curb is fabricated from heavy 18 gauge galvanized iron with mitered and welded corners and insulated on all four sides. The Pipe Portal System allows roofing membranes and base flashings to be installed in accordance with the National Roofing Contractors Association (NRCA) recommendations.

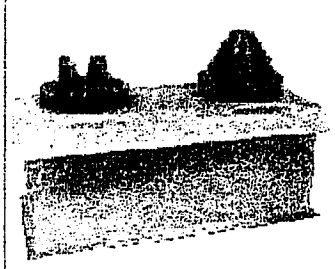

DOUBLE PIPE PORTAL® (Cover, Cap & Clamps) RC-4A

NEW UPC PART NUMBER	DESCRIPTION	QTY/CTN	LIST PRICE PER UNIT
36002 36012 36022 36032 36042 36052 36062 36092 36102 36142	DOUBLE COVER & CAPS w/126 & 212 BLACK CAP DOUBLE COVER & CAPS w/126 & 412 BLACK CAP DOUBLE COVER & CAPS w/126 & 481 BLACK CAP DOUBLE COVER & CAPS w/126 & 126 BLACK CAP DOUBLE COVER & CAPS w/212 & 212 BLACK CAP DOUBLE COVER & CAPS w/212 & 412 BLACK CAP DOUBLE COVER & CAPS w/212 & 481 BLACK CAP DOUBLE COVER & CAPS w/412 & 412 BLACK CAP DOUBLE COVER & CAPS w/412 & 481 BLACK CAP DOUBLE COVER & CAPS w/481 & 481 BLACK CAP	2	**$ 293.00**
32181	DOUBLE RC-4A RAISED CANTED CURB -9 1/2" High	1	**$ 220.00**

See more information about the caps.

PIPE BOOTS

ALP00465

Pipe Flashings (boots)- for economical flashings of single ply roofing systems. Pipe Boots (or witches' hats) are economical flashings designed for single pipe penetrations through single ply roofs. Virtually any common pipe size can be accommodated with one of these boots. The conically shaped steps of the Portals Plus Pipe Boots will securely seal all pipes and its large double thick molded rib at the top of each step offers superior tear resistance and reinforcement, as well as a cutting guide for installation. The Portls Plus Stainless Snaplock Clamp maximizes the secure seal at the penetration. Utilizing the Pipe Boots eliminates workmanship errors in field fabrication and makes flashing pipes a clean, consistent approach. Portals Plus Adapter Rings can be used to seal very small pipes, as well as unusual shapes such as angle irons and square tubes.

Other Flashing Systems: Pipe Portals, Double Pipe Portals, Alumi-Flash

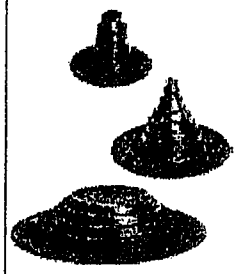

PIPE BOOTS (w/ CLAMPS)

NEW UPC PART NUMBER	DESCRIPTION	QTY/CTN	LIST PRICE PER UNIT
42100	SMALL - BLACK EPDM	10	$ 20.60
42130	SMALL - WHITE EPDM	10	$ 22.05
44130	SMALL - WHITE HYPALON*	10	$ 23.50
42110	MEDIUM - BLACK EPDM	10	$ 26.95
42140	MEDIUM - WHITE EPDM	10	$ 32.55
43170	MEDIUM - BLACK NEOPRENE	10	$ 40.70
44170	MEDIUM - WHITE HYPALON*	10	$ 34.40
46209	MEDIUM - WHITE TPO**	8	$ CF.00
48009	MEDIUM - WHITE PVC**	8	$ CF.00
42121	LARGE - BLACK EPDM	5	$ 95.55
42151	LARGE - WHITE EPDM	5	$ 98.00
43181	LARGE - BLACK NEOPRENE	5	$ 134.75
45000	QUADRASEAL 212R - BLACK EPDM	10	$ 42.00
45010	QUADRASEAL 412R - BLACK EPDM	10	$ 42.00
45020	QUADRASEAL 481R - BLACK EPDM	10	$ 42.00

* - AVAILABLE ON A LIMITED BASIS
** - ALL COLORS AVAILABLE (call Portals Plus)
$CF.00 - CONSULT FACTORY

PIPE BOOTS

Pipe Flashings (boots)- for economical flashings of single ply roofing systems. Pipe Boots (or witches' hats) are economical flashings designed for single pipe penetrations through single ply roofs. Virtually any common pipe size can be accommodated with one of these boots. The conically shaped steps of the Portals Plus Pipe Boots will securely seal all pipes and its large double thick molded rib at the top of each step offers superior tear resistance and reinforcement, as well as a cutting guide for installation. The Portls Plus Stainless Snaplock Clamp maximizes the secure seal at the penetration. Utilizing the Pipe Boots eliminates workmanship errors in field fabrication and makes flashing pipes a clean, consistent approach. Portals Plus Adapter Rings can be used to seal very small pipes, as well as unusual shapes such as angle irons and square tubes.

Other Flashing Systems: Pipe Portals, Double Pipe Portals, Alumi-Flash

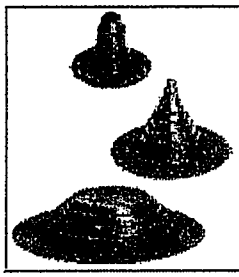

PIPE BOOTS (w/ ADHESIVE TAPE)

NEW UPC PART NUMBER	DESCRIPTION	QTY/CTN	LIST PRICE PER UNIT
42500	SMALL - BLACK EPDM	10	$ 27.70
42510	MEDIUM - BLACK EPDM	10	$ 40.00
43570	MEDIUM - BLACK NEOPRENE	10	$ 53.50

DECK-MATE

ALP00466

Deck-Mates- for watertight flashing of metal roof & wall systems. Deck-Mates are designed in a multitude of sizes to accommodate penetrations from 1/8" to 26" round and work in conjunction with any configuration of metal roofing or siding panel. The Portals Plus Deck-Mate is engineered with an aluminum flanged base that can be bent by hand to conform to the roof profile, irregularities, or slopes. The aluminum flange is bonded to the flexible boot during the molding process and is completely isolated from the underside of the boot to prevent any potential galvanic corrosion such as happens with solid metal flashings. Deck-Mates are available in two flexible boot materials- EPDM, with a serviceable temperature range of -60F to +270F, and Silicone, for both extremely low and extremely high temperature applications, with a serviceable temperature range of -100F to +500F. Installation is quick, easy, and secure, requiring only an approved sealant on the underside and stainless fasteners. Portals Plus Adapter Rings can further extend the capabilities of the Deck-Mates by sealing unusual shapes such as angle irons and square tubes.

EPDM DECK-MATE

NEW UPC PART NUMBER	DESCRIPTION	QTY/ CTN	LIST PRICE PER UNIT
81006	DM#0 1/8" - 3/4"	15	$ 17.40
81016	DM#1 1/4" - 2"	15	$ 20.75
81026	DM#2 1" - 3-1/4"	15	$ 25.20
81036	DM#3 1/4" - 4"	15	$ 29.90
81040	DM#4 3" - 6"	10	$ 34.20
81050	DM#5 4" - 7"	10	$ 37.60
81060	DM#6 5" - 9"	10	$ 66.85
81070	DM#7 6" - 11"	10	$ 80.65
81085	DM#8 7" - 13"	5	$ 92.35
81091	DM#9 10" - 18"	1	$ 188.20
81101	DM#10 13" - 26"	1	$ 455.90

DECK-MATE

Deck-Mates- for watertight flashing of metal roof & wall systems. Deck-Mates are designed in a multitude of sizes to accommodate penetrations from 1/8" to 26" round and work in conjunction with any configuration of metal roofing or siding panel. The Portals Plus Deck-Mate is engineered with an aluminum flanged base that can be bent by hand to conform to the roof profile, irregularities, or slopes. The aluminum flange is bonded to the flexible boot during the molding process and is completely isolated from the underside of the boot to prevent any potential galvanic corrosion such as happens with solid metal flashings. Deck-Mates are available in two flexible boot materials- EPDM, with a serviceable temperature range of -60F to +270F, and Silicone, for both extremely low and extremely high temperature applications, with a serviceable temperature range of -100F to +500F. Installation is quick, easy, and secure, requiring only an approved sealant on the underside and stainless fasteners. Portals Plus Adapter Rings can further extend the capabilities of the Deck-Mates by sealing unusual shapes such as angle irons and square tubes.

SILICONE DECK-MATE - HIGH TEMPERATURE w/CLAMP

NEW UPC PART NUMBER	DESCRIPTION	QTY/ CTN	LIST PRICE PER UNIT
82016	SDM#1 1/4" - 2"	15	$ 28.90
82026	SDM#2 1" - 3-1/4"	15	$ 32.95
82036	SDM#3 1/4" - 4"	15	$ 44.15
82040	SDM#4 3" - 6"	10	$ 85.45
82050	SDM#5 4" - 7"	10	$ 97.45
82060	SDM#6 5" - 9"	10	$ 113.80
82070	SDM#7 6" - 11"	10	$ 164.30
82085	SDM#8 7" - 13"	5	$ 250.80
82091	SDM#0 10" - 18"	1	$ 387.80
82101	SDM#0 13" - 26"	1	$ 720.95

ALUMI-FLASH SYSTEM

Alumi-Flash- for one to four penetrations in one watertight unit. Alumi-Flash makes pitch pans obsoletel Portals Plus Alumi-Flash consists of a flexible EPDM cap w/Stainless Snaplock Clamp(s) and a one piece, spun aluminum base. The flexible EPDM cap eliminates roof leaks because penetrations can expand, contract, and vibrate independently of the roofing system. There are five different cap styles available which can accommodate a variety of round pipes, tubes, and conduits from 3/8" round.through 12" round, and, with Portals Plus Adapter Rings, angle irons and square tubes, as well. The EPDM cap is mechanically sealed to the Alumi-Flash base by a double "Weather-Tite Pressure Seal", which consists of two beads formed into the collar of the base that mate with double grooves molded into the inside of the cap. The Portals Plus Alumi-Flash provides a permanent, watertight, and maintenance-free means for penetrating roofs that is simple and easy to install. Adapter Rings can modify these penetrations

ALUMI-FLASH EW w/ PRIMED FLANGE

ALP00467

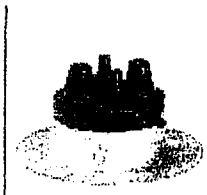

NEW UPC PART NUMBER	DESCRIPTION	QTY/ CTN	LIST PRICE PER UNIT
22215 22225 22235 22245	w/ 126 BLACK CAP (1 - 2" to 6" pipe) w/ 212 BLACK CAP (2 - .375" to 1 & 2 - 1" - 2" pipes) w/ 412 BLACK CAP (4 - 1" to 2" pipes) w/ 481 BLACK CAP (4 - .375" to 1" pipes)	5	**$ 101.65**
22265 22275	w/ 126 WHITE CAP (1 - 2" to 6" pipe) w/ 212 WHITE CAP (2 - .375" to 1 & 2 - 1" - 2" pipes)	5	**$ 102.90**

ALUMI-FLASH SYSTEM

Alumi-Flash- for one to four penetrations in one watertight unit. Alumi-Flash makes pitch pans obsolete! Portals Plus Alumi-Flash consists of a flexible EPDM cap w/Stainless Snaplock Clamp(s) and a one piece, spun aluminum base. The flexible EPDM cap eliminates roof leaks because penetrations can expand, contract, and vibrate independently of the roofing system. There are five different cap styles available which can accommodate a variety of round pipes, tubes, and conduits from 3/8" round through 12" round, and, with Portals Plus Adapter Rings, angle irons and square tubes, as well. The EPDM cap is mechanically sealed to the Alumi-Flash base by a double "Weather-Tite Pressure Seal", which consists of two beads formed into the collar of the base that mate with double grooves molded into the inside of the cap. The Portals Plus Alumi-Flash provides a permanent, watertight, and maintenance-free means for penetrating roofs that is simple and easy to install. Adapter Rings can modify these penetrations

ALUMI-FLASH EW

NEW UPC PART NUMBER	DESCRIPTION	QTY/ CTN	LIST PRICE PER UNIT
23015 23025 23035 23045	w/ 126 BLACK CAP (1 - 2" to 6" pipe) w/ 212 BLACK CAP (2 - .375" to 1 & 2 - 1" - 2" pipes) w/ 412 BLACK CAP (4 - 1" to 2" pipes) w/ 481 BLACK CAP (4 - .375" to 1" pipes)	5	**$ 86.30**
23055 23065	w/ 126 WHITE CAP (1 - 2" to 6" pipe) w/ 212 WHITE CAP (2 - .375" to 1 & 2 - 1" - 2" pipes)	5	**$ 87.60**

SHINGLE FLASHING SYSTEMS

Shingle Flashings- for effectively sealing pipe penetrations on shingle roofs. Shingle Flashings provide permanent elastic seals at pipe penetrations from 1- 1/4" to 4" round on all shingle roofing systems up to a 40 degree slope. Portals Plus Shingle Flashings consist of an elastomeric collar locked into a nailable rigid base which integrates into the shingle roofing system. Also available is an all elastomeric one piece Shingle Flashing which can accommodate roof slopes up to 45 degrees. Shingle Flashings are the solution to temporary, leaky field-fabricated sheet metal and roof cement flashings.

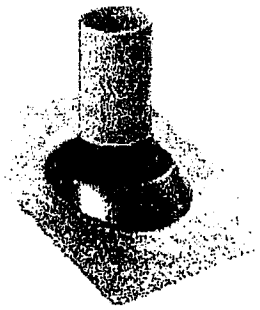

GALVANIZED

NEW UPC PART NUMBER	SIZE	DESCRIPTION	LIST PRICE PER UNIT
85009	**1.25" - 1.50"**	GALVANIZED FLASHING BASE w/ elastomeric collar	**$ 6.40**
85019	**2"**	GALVANIZED FLASHING BASE w/ elastomeric collar	**$ 6.75**
85029	**3"**	GALVANIZED FLASHING BASE w/ elastomeric collar	**$ 7.35**
85039	**4"**	GALVANIZED FLASHING BASE w/ elastomeric collar	**$ 9.50**

SHINGLE FLASHING SYSTEMS

ALP00468

Shingle Flashings- for effectively sealing pipe penetrations on shingle roofs. Shingle Flashings provide permanent elastic seals at pipe penetrations from 1- 1/4" to 4" round on all shingle roofing systems up to a 40 degree slope. Portals Plus Shingle Flashings consist of an elastomeric collar locked into a nailable rigid base which integrates into the shingle roofing system. Also available is an all elastomeric one piece Shingle Flashing which can accommodate roof slopes up to 45 degrees. Shingle Flashings are the solution to temporary, leaky field-fabricated sheet metal and roof cement flashings.

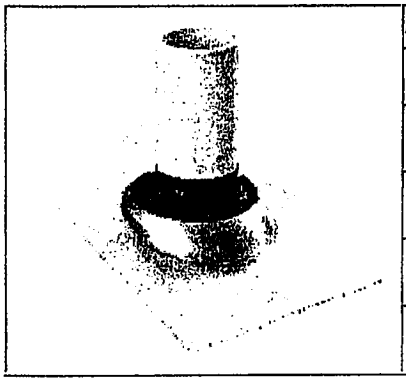

ALUMINUM

NEW UPC PART NUMBER	SIZE	DESCRIPTION	LIST PRICE PER UNIT
85209	1.25" - 1.50"	ALUMINUM FLASHING BASE w/ elastomeric collar	$ 7.60
85219	2"	ALUMINUM FLASHING BASE w/ elastomeric collar	$ 8.10
85229	3"	ALUMINUM FLASHING BASE w/ elastomeric collar	$ 9.00
85239	4"	ALUMINUM FLASHING BASE w/ elastomeric collar	$ 10.80

SHINGLE FLASHING SYSTEMS

Shingle Flashings- for effectively sealing pipe penetrations on shingle roofs. Shingle Flashings provide permanent elastic seals at pipe penetrations from 1- 1/4" to 4" round on all shingle roofing systems up to a 40 degree slope. Portals Plus Shingle Flashings consist of an elastomeric collar locked into a nailable rigid base which integrates into the shingle roofing system. Also available is an all elastomeric one piece Shingle Flashing which can accommodate roof slopes up to 45 degrees. Shingle Flashings are the solution to temporary, leaky field-fabricated sheet metal and roof cement flashings.

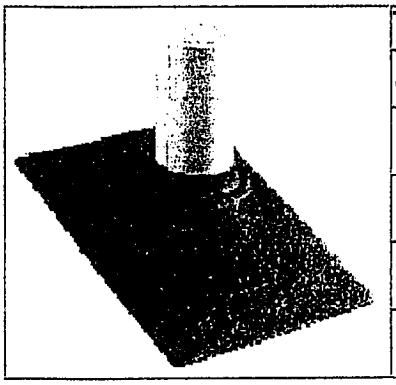

THERMOPLASTIC

NEW UPC PART NUMBER	SIZE	DESCRIPTION	LIST PRICE PER UNIT
85309	1.25" - 1.50"	TERMOPLASTIC FLASHING BASE w/ elastomeric collar	$ 5.10
85319	2"	TERMOPLASTIC FLASHING BASE w/ elastomeric collar	$ 5.25
85329	3"	TERMOPLASTIC FLASHING BASE w/ elastomeric collar	$ 5.35
85339	4"	TERMOPLASTIC FLASHING BASE w/ elastomeric collar	$ 6.05

SHINGLE FLASHING SYSTEMS

Shingle Flashings- for effectively sealing pipe penetrations on shingle roofs. Shingle Flashings provide permanent elastic seals at pipe penetrations from 1- 1/4" to 4" round on all shingle roofing systems up to a 40 degree slope. Portals Plus Shingle Flashings consist of an elastomeric collar locked into a nailable rigid base which integrates into the shingle roofing system. Also available is an all elastomeric one piece Shingle Flashing which can accommodate roof slopes up to 45 degrees. Shingle Flashings are the solution to temporary, leaky field-fabricated sheet metal and roof cement flashings.

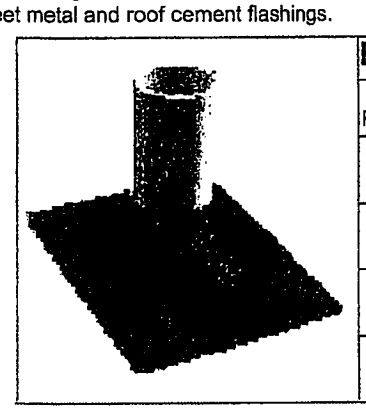

ELASTOMERIC

NEW UPC PART NUMBER	SIZE	DESCRIPTION	LIST PRICE PER UNIT
85109	1.25" - 1.50"	ELASTOMERIC FLASHING BASE w/ elastomeric collar	$ 5.75
85119	2"	ELASTOMERIC FLASHING BASE w/ elastomeric collar	$ 6.05
85129	3"	ELASTOMERIC FLASHING BASE w/ elastomeric collar	$ 7.25
85139	4"	ELASTOMERIC FLASHING BASE w/ elastomeric collar	$ 9.10

ALUMI-FLASH SYSTEM

ALP00469

Alumi-Flash- for one to four penetrations in one watertight unit. Alumi-Flash makes pitch pans obsolete! Portals Plus Alumi-Flash consists of a flexible EPDM cap w/Stainless Snaplock Clamp(s) and a one piece, spun aluminum base. The flexible EPDM cap eliminates roof leaks because penetrations can expand, contract, and vibrate independently of the roofing system. There are five different cap styles available which can accommodate a variety of round pipes, tubes, and conduits from 3/8" round through 12" round, and, with Portals Plus Adapter Rings, angle irons and square tubes, as well. The EPDM cap is mechanically sealed to the Alumi-Flash base by a double "Weather-Tite Pressure Seal", which consists of two beads formed into the collar of the base that mate with double grooves molded into the inside of the cap. The Portals Plus Alumi-Flash provides a permanent, watertight, and maintenance-free means for penetrating roofs that is simple and easy to install. Adapter Rings can modify these penetrations

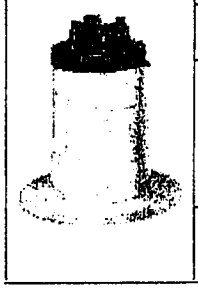

ALUMI-FLASH XT

NEW UPC PART NUMBER	DESCRIPTION	QTY/ CTN	LIST PRICE PER UNIT
24015 24025 24035 24045	w/ 126 BLACK CAP (1 - 2" to 6" pipe) w/ 212 BLACK CAP (2 - .375" to 1 & 2 - 1" - 2" pipes) w/ 412 BLACK CAP (4 - 1" to 2" pipes) w/ 481 BLACK CAP (4 - .375" to 1" pipes)	4	**$ 141.50**
24065 24075	w/ 126 WHITE CAP (1 - 2" to 6" pipe) w/ 212 WHITE CAP (2 - .375" to 1 & 2 - 1" - 2" pipes)	4	**$ 144.50**

SHINGLE FLASHING SYSTEMS

Shingle Flashings- for effectively sealing pipe penetrations on shingle roofs. Multi Fit Shingle Flashings provide permanent elastic seals at pipe penetrations from 1-1/2" to 4" round on all shingle roofing systems up to a 40 degree slope. Portals Plus Multi Fit Shingle Flashings consist of an elastomeric collar locked into a nailable rigid base which integrates into the shingle roofing system. Multi Fit Shingle Flashings are the solution to temporary, leaky field- fabricated sheet metal and roof cement flashings.

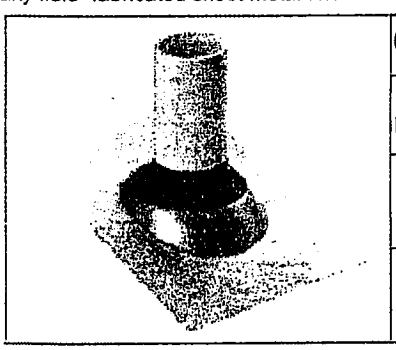

GALVANIZED MULTI FIT

NEW UPC PART NUMBER	SIZE	DESCRIPTION	LIST PRICE PER UNIT
85049	**1.50" - 2" - 3"**	GALVANIZED FLASHING BASE w/ elastomeric collar	**$ 5.77**
85059	**3" - 4"**	GALVANIZED FLASHING BASE w/ elastomeric collar	**$ 5.77**

SHINGLE FLASHING SYSTEMS

Shingle Flashings- for effectively sealing pipe penetrations on shingle roofs. Multi Fit Shingle Flashings provide permanent elastic seals at pipe penetrations from 1- 1/4" to 4" round on all shingle roofing systems up to a 40 degree slope. Portals Plus Multi Fit Shingle Flashings consist of an elastomeric collar locked into a nailable rigid base which integrates into the shingle roofing system. Multi Fit Shingle Flashings are the solution to temporary, leaky field- fabricated sheet metal and roof cement flashings.

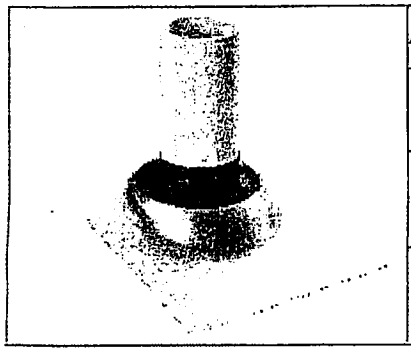

ALUMINUM MULTI FIT

NEW UPC PART NUMBER	SIZE	DESCRIPTION	LIST PRICE PER UNIT
85249	**1.50" - 2" - 3"**	ALUMINUM FLASHING BASE w/ elastomeric collar	**$ 7.17**
85259	**3" - 4"**	ALUMINUM FLASHING BASE w/ elastomeric collar	**$ 7.17**

ALP00470

SHINGLE FLASHING SYSTEMS

Shingle Flashings- for effectively sealing pipe penetrations on shingle roofs. Multi Fit Shingle Flashings provide permanent elastic seals at pipe penetrations from 1- 1/4" to 4" round on all shingle roofing systems up to a 40 degree slope. Portals Plus Multi Fit Shingle Flashings consist of an elastomeric collar locked into a nailable rigid base which integrates into the shingle roofing system. Multi Fit Shingle Flashings are the solution to temporary, leaky field- fabricated sheet metal and roof cement flashings.

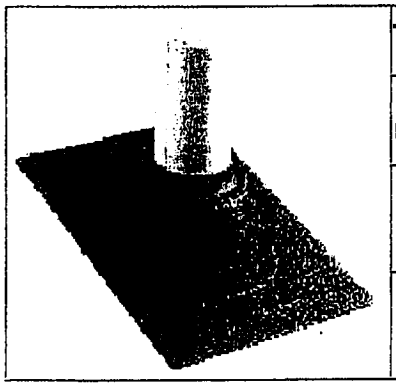

THERMOPLASTIC MULTI FIT

NEW UPC PART NUMBER	SIZE	DESCRIPTION	LIST PRICE PER UNIT
85349	1.50" - 2" - 3"	TERMOPLASTIC FLASHING BASE w/ elastomeric collar	$ 4.70
85359	3" - 4"	TERMOPLASTIC FLASHING BASE w/ elastomeric collar	$ 4.70

PLASTI-FLASH SYSTEM

Plasti-Flash- for one to four penetrations in one watertight unit. Plasti-Flash makes pitch pans obsolete! Portals Plus Plasti- Flash consists of a flexible EPDM cap w/Stainless Snaplock Clamp(s) and a one piece, weldable white PVC base. The flexible white EPDM cap eliminates roof leaks because penetrations can expand, contract, and vibrate independently of the roofing system. There are two different cap styles available which can accommodate a variety of round pipes, tubes, and conduits from 3/8" round through 6" round, and, with Portals Plus black Adapter Rings, angle irons and square tubes, as well. The white EPDM cap is mechanically sealed to the Plasti-Flash base by a double "Weather-Tite Pressure Seal", which consists of two beads formed into the collar of the base that mate with double grooves molded into the inside of the cap. The Portals Plus Plasti-Flash provides a permanent, watertight, and maintenance-free means for penetrating roofs that is simple and easy to install.
Adapter Rings can modify these penetrations

PLASTI-FLASH

NEW UPC PART NUMBER	OLD PART PART NUMBER	DESCRIPTION	QTY/CTN	LIST PRICE PER UNIT
26015 26025	PF104 PF102	w/ 126 BLACK CAP (1 - 2" to 6" pipe) w/ 212 BLACK CAP (2 - .375" to 1 & 2 - 1" - 2" pipes)	5	$ 69.85
26035	PF500	RETROFIT PLASTI-FLASH w/ SC36 RETROFIT BLACK CAP	5	$ 134.75

SINGLE PIPE PORTAL SYSTEM

Pipe Portal System - for one to eight penetrations in one watertight unit. The Pipe Portal System is a versatile, leak proof, and weathertight solution to routing pipes through a roof. The Pipe Portal System is designed to allow both horizontal and vertical pipe movement, yet provide a maintenance-free permanent installation which accommodates penetrations from 3/8" round through 12" round, and, with Portals Plus Adapter Rings, angle irons and square tubes, as well. Compression molded EPDM rubber caps provide the flexible seal at each penetration. Stainless Snaplock Clamps provide an added measure of assurance at each penetration. The flexible EPDM caps are mechanically sealed to the Pipe Portal cover by a double "Weather-Tite Pressure Seal", which consists of two beads formed into the collar of the cover that mate with double grooves molded into the inside of the cap. The curb cover is molded of one piece ultraviolet-resistant ABS plastic and laminated with an acrylic coating for extra protection. This manufacturing process creates exposed materials that are both ozone and ultraviolet resistant with a serviceable temperature range of -40F to +160F. To complete the system, the roof curb is fabricated from heavy 18 gauge galvanized iron with mitered and welded corners and insulated on all four sides. The Pipe Portal System allows roofing membranes and base flashings to be installed in accordance with the National Roofing Contractors Association (NRCA) recommendations.

PIPE PORTAL® (Cover, Black Cap & Clamps) RC-2A

ALP00471

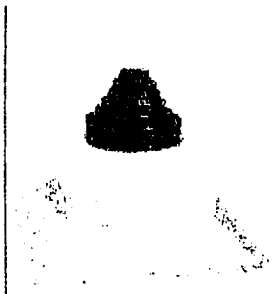

NEW UPC PART NUMBER	DESCRIPTION	QTY/ CTN	LIST PRICE PER UNIT
32005 32015 32025 32035	w/ 126 BLACK CAP (1 - 2" to 6" pipe) w/ 212 BLACK CAP (2 - .375" to 1 & 2 - 1" - 2" pipes) w/ 412 BLACK CAP (4 - 1" to 2" pipes) w/ 481 BLACK CAP (4 - .375" to 1" pipes)	5	**$ 96.80**
32041	w/ 182 BLACK CAP (1 - 8" to 12" pipe)	1	**$ 154.40**
32055 32065	w/ 126 WHITE CAP (1 - 2" to 6" pipe) w/ 212 WHITE CAP (2 - .375" to 1 & 2 - 1" - 2" pipes)	5	**$ 98.00**
32101	SMALL RC-2A STRAIGHT SIDED CURB - 11" High	1	**$ 104.00**
32131	LARGE RC-2A STRAIGHT SIDED CURB - 11" High	1	**$ 199.00**

See more information about the caps.

PORTALS PLUS *484 N. Thomas Drive, Bensenville, IL 60106* *TEL: (630) 595-7320 FAX: (630) 766-5259*

ALP00472

AS HOLDINGS, INC.
v. H&C MILCOR, INC.
Opposition No. 91182064
OPPOSER'S EXHIBIT
9

Pipe Flashings

Technical Product Information

Flashings for all size penetrations for single ply roofs

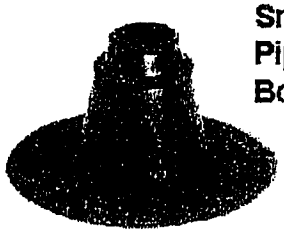

Small Pipe Boot

Medium Pipe Boot

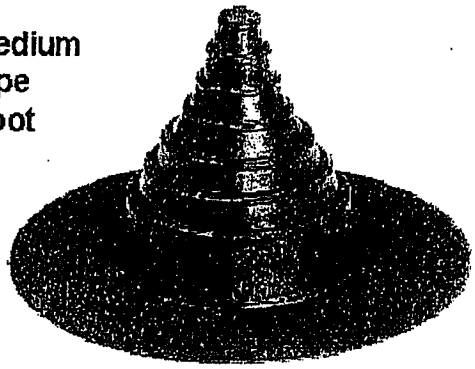

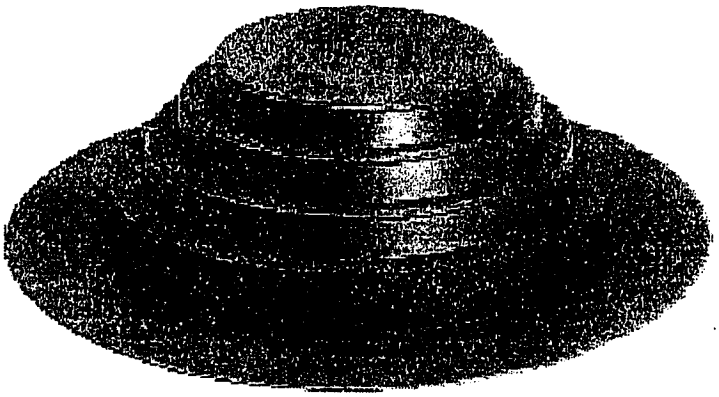

Large Pipe Boot

Quadraseal Pipe Boot

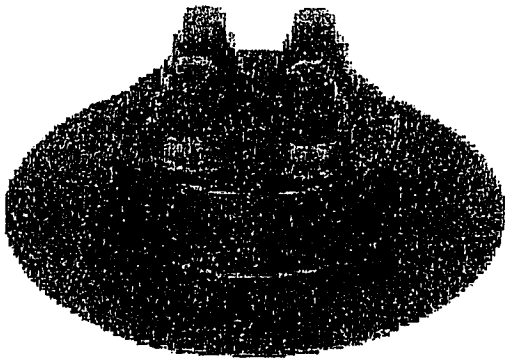

Opposer's
EXHIBIT
9 I.D
10-3-08 S.O.M

The "Pipe Boot" is an economical flashing designed for single pipe penetrations on single ply rubber roofs. The unit will accomodate virtually all pipe sizes: 1.75" and 2.75" on Small Pipe Boot, 1" through 6" on Medium Pipe Boot and 8" through 12" on Large Pipe Boot. Pipe Boots are available in EPDM, Neoprene, Hypalon, TPO, or PVC material. The Quadraseal is designed to allow as many as four pipes up to 2" in diameter to pass through one flashing. Quadraseals are available in EPDM material only. The conically shaped steps of the Portals Plus pipe flashing will securely seal all pipes and the large double thick molded rib at the top of each step offers supreme tear resistance and reinforcement, as well as a cutting guide. Utilizing the Pipe Flashings eliminates the workmanship error in field fabrication and makes flashing pipes a clean, consistent approach.

Adapters available for round, square tube, and angle iron available to fit most pipe boots.

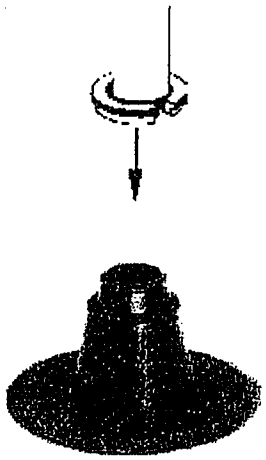

SMALL PIPE BOOT

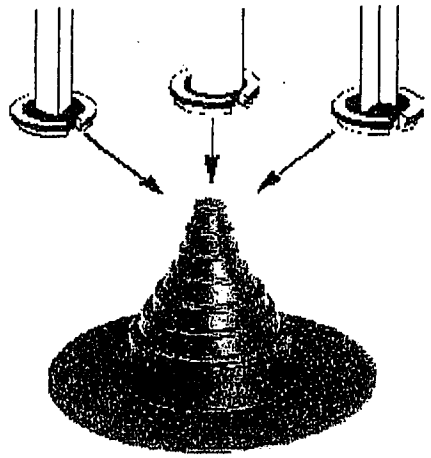

MEDIUM PIPE BOOT

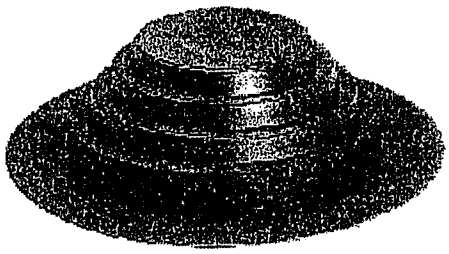

LARGE PIPE BOOT

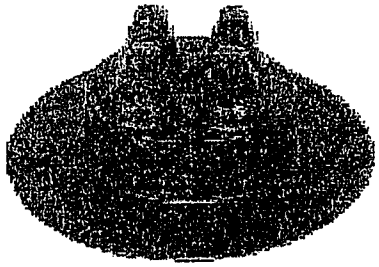

QUADRASEAL 412R

NEW UPC PART NUMBER	DESCRIPTION	QTY/CTN	LIST PRICE PER UNIT
42100	SMALL - BLACK EPDM	10	$ 20.60
42130	SMALL - WHITE EPDM	10	$ 22.05
44130	SMALL - WHITE HYPALON*	10	$ 23.50
42110	MEDIUM - BLACK EPDM	10	$ 26.95
42140	MEDIUM - WHITE EPDM	10	$ 32.55
43170	MEDIUM - BLACK NEOPRENE	10	$ 40.70
44170	MEDIUM - WHITE HYPALON*	10	$ 34.40
OEM	MEDIUM - WHITE TPO**	8	$ CF.00
OEM	MEDIUM - WHITE PVC**	8	$ CF.00
42121	LARGE - BLACK EPDM	5	$ 95.55
42151	LARGE - WHITE EPDM	5	$ 98.00
43181	LARGE - WHITE NEOPRENE	5	$ 134.75

ALP00474

** - ALL COLORS AVAILABLE FOR TPO & PVC (call Portals Plus)
CF - DENOTES CALL FACTORY

Quadraseals
Adapter Rings
Installation Instructions
CAD Page

Other Flashing Systems:
Pipe Portals
Double Pipe Portals
Alumi-Flash

PORTALS PLUS 484 N. Thomas Drive, Bensenville, IL 60106 TEL: (630) 595-7320 FAX: (630) 766-5259

All information is subject to change without notice. Dimensions and specifications shown are within manufacturing tolerances.
© Copyright Commercial Products Group of Hart & Cooley, Inc., July, 2008. All Rights Reserved.

ALP00475

Pipe Flashings

Technical Product Information

Medium Pipe Boot

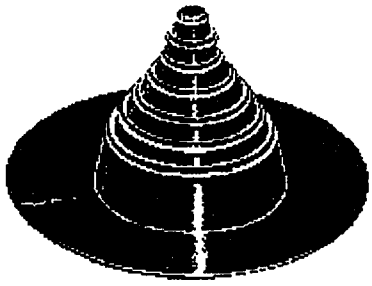

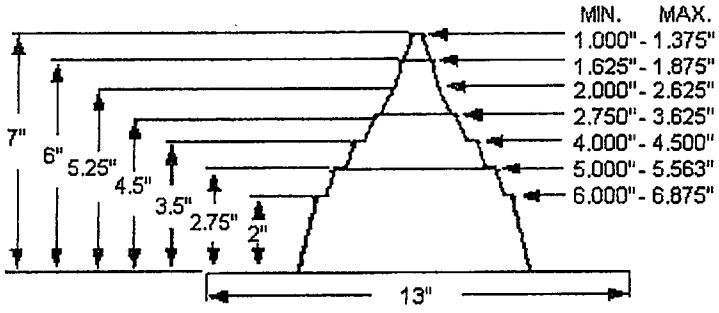

SPECIFICATION

Furnish and install the Portals Plus Medium Pipe Boot as manufactured by Portals Plus, Inc., Bensenville, IL, at all points where any projection penetrates the roof system, and is less than 6" in diameter. The Medium Pipe Boot shall include 60 mil EPDM, NEOPRENE, or HYPALON compression molded body. The Medium Pipe Boot shall also include Portals Plus' Snaplock Clamp. Whenever necessary utilize Portals Plus Adapters to seal to square tubing and angle iron and for round penetrations less than 1" in diameter. Use white or black as necessary. Attachment of Medium Pipe Boot to roof system shall be done in accordance with Portals Plus Installation Instructions and the roofing membrane manufacturer's requirements.

NEW UPC PART NUMBER	DESCRIPTION	QTY/CTN	LIST PRICE PER UNIT
42110	MEDIUM - BLACK EPDM	10	**$ 26.95**
42140	MEDIUM - WHITE EPDM	10	**$ 32.55**
43170	MEDIUM - BLACK NEOPRENE	10	**$ 40.70**
44170	MEDIUM - WHITE HYPALON*	10	**$ 31.85**

* - AVAILABLE ON A LIMITED BASIS

Quadraseals.
Adapter Rings.
Installation Instructions.
CAD Page

Other Flashing Systems:
Pipe Portals
Double Pipe Portals
Alumi-Flash

Main Page

PORTALS PLUS 484 N. Thomas Drive, Bensenville, IL 60106 TEL: (630) 595-7320 FAX: (630) 766-5259

All information is subject to change without notice. Dimensions and specifications shown are within manufacturing tolerances.
© Copyright Commercial Products Group of Hart & Cooley, Inc., July, 2008. All Rights Reserved.

ALP00476

Pipe Flashings

Technical Product Information

Large Pipe Boot

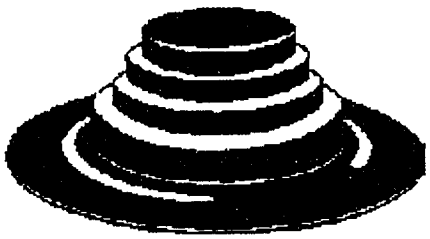

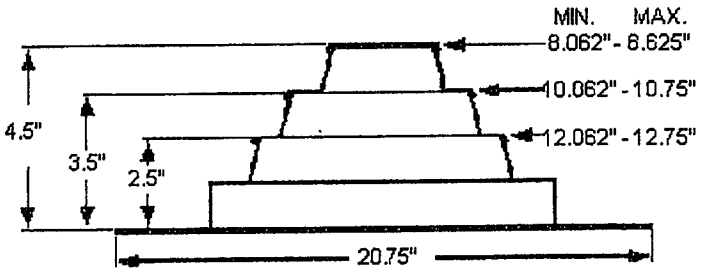

SPECIFICATION

Furnish and install the Portals Plus Large Pipe Boot as manufactured by Portals Plus, Inc., Bensenville, IL, at all points where any projection penetrates the roof system, and is from 8" to 12" in diameter. The Large Pipe Boot shall include 60 mil EPDM or NEOPRENE compression molded body. The Large Pipe Boot shall also include Portals Plus' Snaplock Clamp. Use white or black as necessary. Attachment of Large Pipe Boot to roof system shall be done in accordance with Portals Plus Installation Instructions and the roofing membrane manufacturer's requirements.

NEW UPC PART NUMBER	DESCRIPTION	QTY/CTN	LIST PRICE PER UNIT
42121	LARGE - BLACK EPDM	5	**$ 95.55**
42151	LARGE - WHITE EPDM	5	**$ 98.00**
43181	LARGE - BLACK NEOPRENE	5	**$ 134.75**

Quadraseals.
Adapter Rings.
Installation Instructions.
CAD Page

Other Flashing Systems:
Pipe Portals
Double Pipe Portals
Alumi-Flash

Main Page

PORTALS PLUS *484 N. Thomas Drive, Bensenville, IL 60106* *TEL: (630) 595-7320 FAX: (630) 766-5259*

All information is subject to change without notice. Dimensions and specifications shown are within manufacturing tolerances.
© Copyright Commercial Products Group of Hart & Cooley, Inc., July, 2008. All Rights Reserved.

Pipe Flashings

Technical Product Information

Small Pipe Boot

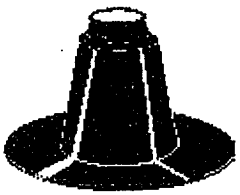

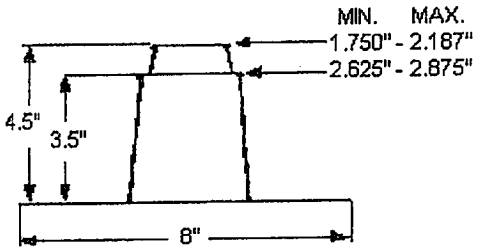

SPECIFICATION

Furnish and install the Portals Plus Small Pipe Boot as manufactured by Portals Plus, Inc., Bensenville, IL, at all points where any projection penetrates the roof system, and is less than 3" in diameter. The Small Pipe Boot shall include 60 mil EPDM, NEOPRENE, or HYPALON compression molded body. The Small Pipe Boot shall also include Portals Plus' Snaplock Clamp. Use white or black as necessary. Use Portals Plus Adapter Rings for round penetrations less than 1" diameter. Attachment of Small Pipe Boot to roof system shall be done in accordance with Portals Plus Installation Instructions and the roofing membrane manufacturer's requirements.

NEW UPC PART NUMBER	DESCRIPTION	QTY/CTN	LIST PRICE PER UNIT
42100	SMALL - BLACK EPDM	10	**$ 20.60**
42130	SMALL - WHITE EPDM	10	**$ 22.05**
44130	SMALL - WHITE HYPALON*	10	**$ 23.50**

* - AVAILABLE ON A LIMITED BASIS

Quadraseals.
Adapter Rings.
Installation Instructions.
CAD Page

Other Flashing Systems:
Pipe Portals
Double Pipe Portals
Alumi-Flash

Main Page

PORTALS PLUS *484 N. Thomas Drive, Bensenville, IL 60106* *TEL: (630) 595-7320 FAX: (630) 766-5259*

All information is subject to change without notice. Dimensions and specifications shown are within manufacturing tolerances.
© Copyright Commercial Products Group of Hart & Cooley, Inc., July, 2008. All Rights Reserved.

ALP00478

AS HOLDINGS, INC.
v. H&C MILCOR, INC.
Opposition No. 91182064
OPPOSER'S EXHIBIT
10

Adapter Rings

Technical Product Information

For use with all new installation and retrofit penetration flashings

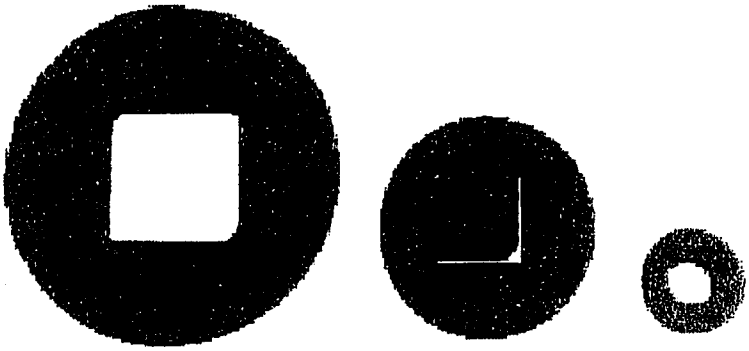

LARGE ROUND ADAPTERS

Part #	Projection O.D. Diameter	A
D001	.50"	.25"
D002	.75"	.50"
D003	.875"	.625"
D004	1"	.75"
D005	1.25"	1"
D006	1.50"	1.25"
D007	1.75"	1.50"
D008	2"	1.75"
D009	2.25"	2"
D010	2.50"	2.25"
D011	2.75"	2.50"
D012	3"	2.75"
D013	3.25"	3"
D014	3.5"	3.25"

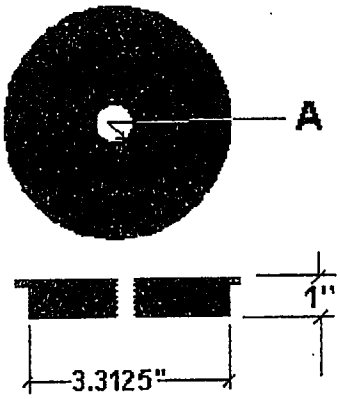

SMALL ROUND ADAPTERS

Part #	Projection O.D. Diameter	A
D301	.375"	.25"
D302	.50"	.375"
D303	.75"	.50"
D304	.875"	.75"

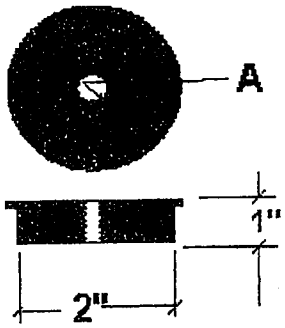

Opposer's
EXHIBIT
#10 I.D
10-3-08 S.O'D

Adapter only

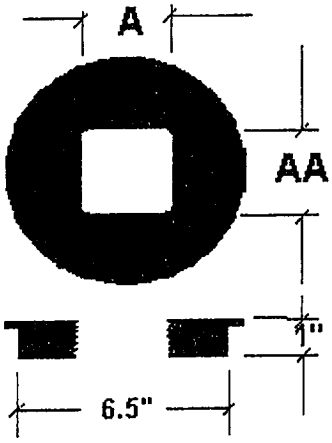

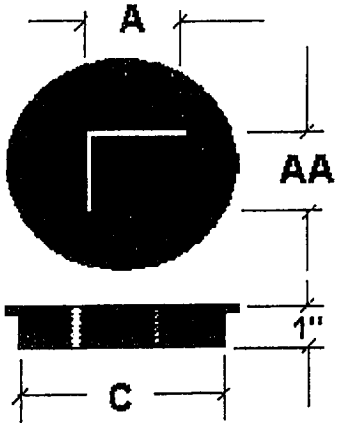

SQUARE TUBE ADAPTERS

Part #	A	AA
D103	3"	3"
D104"	4"	4"

ANGLE IRON ADAPTERS

Part #	A	AA	C
D201	1.75"	1.75"	4"
D206	3"	3"	5.25"
D296	4"	4"	6"
D200	1"	1"	4"

CAD Page

> Next Page >

PORTALS PLUS 484 N. Thomas Drive, Bensenville, IL 60106 TEL: (630) 595-7320 FAX: (630) 766-5259

All information is subject to change without notice. Dimensions and specifications shown are within manufacturing tolerances.
© Copyright Commercial Products Group of Hart & Cooley, Inc., January, 2008. All Rights Reserved.

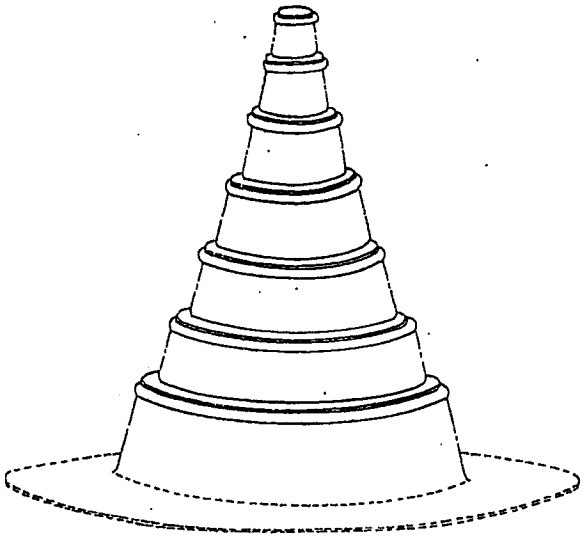

Fig. 1

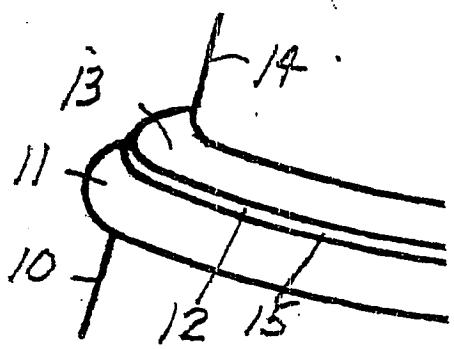

Fig. 3

The mark consists of a plurality of frusto-conical steps arranged with the largest diameter step at the bottom and the smallest diameter step at the top as shown above in Fig. 1.

Each of the steps, as shown in Fig. 3 above, consists of: (1) a lower frusto-conical surface 10; (b) a circular ring 11 with a semi-circular cross section in a vertical plane; (c) a short annular nearly vertical frusto-conical surface 12; (d) a flat horizontal annular surface 13, and; (e) a frusto-conical surface 14 extending upwardly from the inner reach of surface 13. Applicant makes no claims to the shape of the boot portions in dotted lines.

Opposer's
EXHIBIT
11 I.D
10-3-08 S.O.'D

AS HOLDINGS, INC.
v. H&C MILCOR, INC.
Opposition No. 91182064
OPPOSER'S EXHIBIT
11

United States Patent [19]

Resech

[11] **4,211,423**

[45] **Jul. 8, 1980**

[54] **ROOF SEAL DEVICE**

[75] Inventor: **Raymond W. Resech**, La Grange Park, Ill.

[73] Assignee: **Portals Plus, Inc.**, La Grange Park, Ill.

[21] Appl. No.: **974,435**

[22] Filed: **Dec. 29, 1978**

Related U.S. Application Data

[63] Continuation-in-part of Ser. No. 881,186, Feb. 27, 1978, abandoned.

[51] Int. Cl.² F16J 15/02; E04D 13/14

[52] U.S. Cl. ..... 277/212 FB; 285/4; 285/42; 277/1; 277/12

[58] Field of Search ..... 277/1, 12, 212 FB; 285/3, 4, 42–44

[56] **References Cited**

U.S. PATENT DOCUMENTS

917,167	4/1909	Shaw	285/43
2,985,465	5/1961	Church	285/42
3,704,894	12/1972	Didszuhn	277/212 FB
3,807,110	4/1974	Kaminski	285/44 X
4,010,578	3/1977	Logsdon	285/44 X

Primary Examiner—Robert S. Ward, Jr.
Attorney, Agent, or Firm—John C. Brezina; Van Metre Lund

[57] **ABSTRACT**

A device is provided including a pair of base sections adapted to be joined together along a generally vertical plane in approximate alignment with a pipe or other object extending through a roof or supported therein, such sections including a pair of molded plastic-supporting parts and a pair of skirt parts of elastomeric material which have overlapping edge portions and which define a downwardly facing surface secured by an adhesive to the upper surface of roofing material to provide a permanent weathertight seal. A split boot is secured to the upper end of a tubular portion of the base sections and is of a stepped, severable construction for accommodating pipes or other objects of various larger sizes. Lips at the split of the boot are secured together by a channel-shaped metal clip. For smaller objects, a split plug is secured on the upper end of the split boot and has inwardly facing annular serrations for sealing engagement with an object. A multi-purpose adaptor plug is also provided for use with a variety of shapes, sizes and orientations of objects.

16 Claims, 14 Drawing Figures

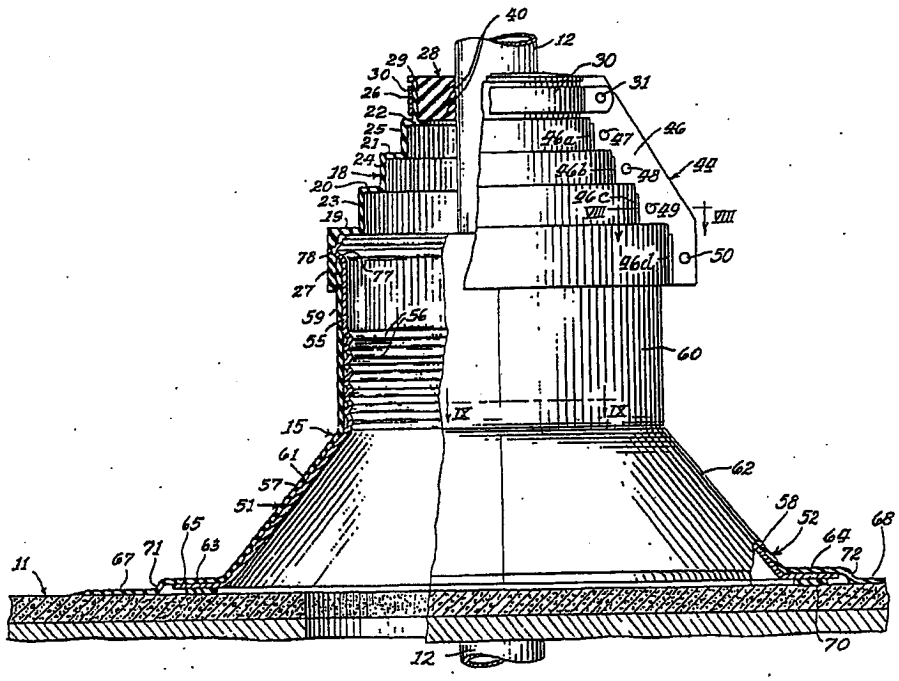

Opposer's
EXHIBIT
#12 I.D
10-3-08 S.O.D

AS HOLDINGS, INC.
v. H&C MILCOR, INC.
Opposition No. 91182064
OPPOSER'S EXHIBIT
12

ALP00209

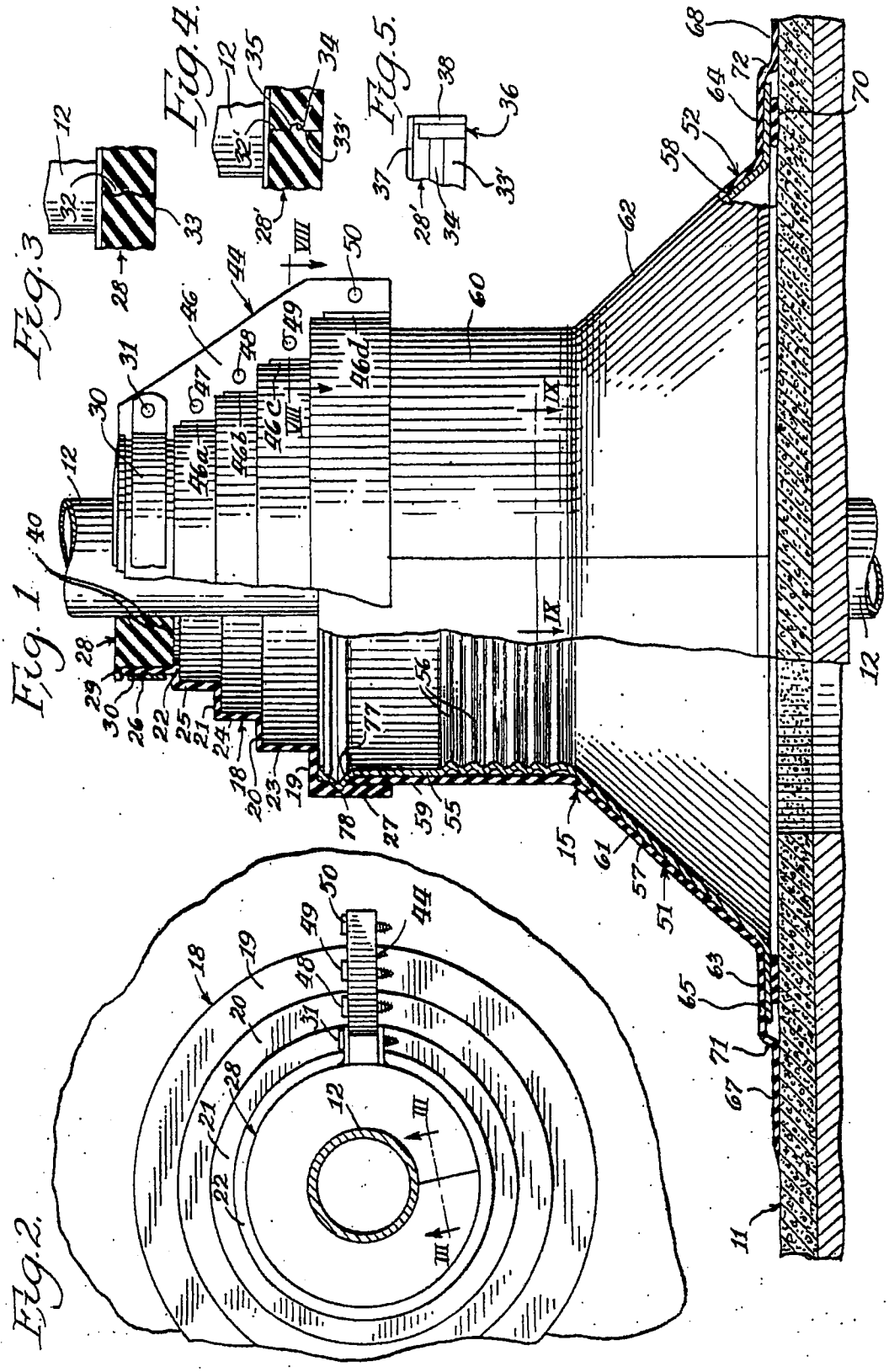
Fig. 1
Fig. 2
Fig. 3
Fig. 4
Fig. 5

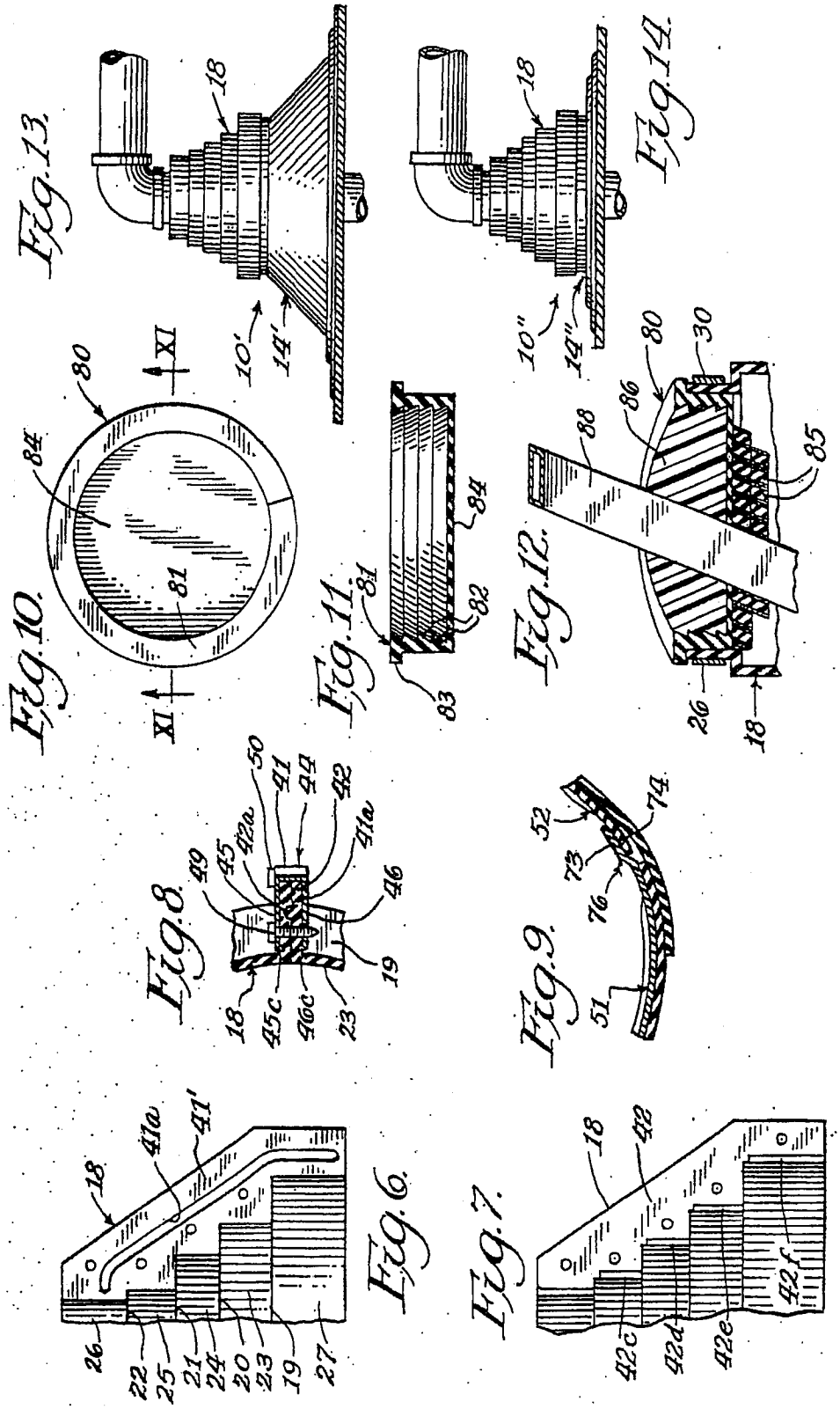
Fig.13.
18
10'
14'
Fig.14.
18
10"
14"
Fig.10.
80
84
81
XI
XI
Fig.11.
81
84
82
83
Fig.12.
88
86
80
30
85
26
18
Fig.8.
49
45
42a
50
41
44
42
41a
46
19
18
45c
46c
23
Fig.9.
52
74
73
76
51
Fig.6.
18
41a
41'
26
22
25
21
24
20
23
19
27
Fig.7.
18
42
42c
42d
42e
42f

ROOF SEAL DEVICE

This application is a continuation-in-part of my copending application, Ser. No. 881,186, filed Feb. 27, 1978, now abandoned.

This invention relates to a roof seal device and more particularly to a device for providing a seal on a roof around a pipe or other object extending through a roof or supported therein. The device is adapted for use in extending pipes through existing roofs as well as in new constructions and is easily installed while providing a permanent weathertight seal.

BACKGROUND OF THE PRIOR ART

Under present roofing practices in which a pitch pocket is used to seal a pipe to a roof opening, leaks are quite common and there is a very high percentage of leaks within the first six months after installation. Sealants crack or run off because of ever-changing weather conditions. Pipe and roofing materials expand and contract with temperature changes and there are also relative movements such as vibrations from wind and/or machinery. If oftentimes happens that leaks are not discovered until after substantial damage has occurred, making major repairs necessary.

Roof curb devices have been provided for obtaining a proper seal but have generally be designed for new construction or during installation of a new roof and they are difficult to install and not at all suitable for extending a pipe through an existing roof.

SUMMARY OF THE INVENTION

This invention was evolved with the general object of overcoming the disadvantages of prior art sealing methods and devices and of providing a device which will provide a permanent weatherproof seal and which is readily installed in both existing and new construction.

In accordance with this invention, a pair of complementary base sections are provided, each including a support part of a molded, strong and substantially rigid plastic material and a skirt part of a flexible elastomeric material on the support part. The sections are arranged to be secured together along a generally vertical plane through a roof opening and together they provide an upstanding tubular portion and a peripheral flange portion with the skirt parts providing a downwardly facing surface engageable with the upper surface of roofing material about a pipe or other object extending through a roof or supported therein. An adhesive material bonds such engaging surfaces together and a permanent weatertight seal is provided.

The flexibility of the skirt parts promotes conformity to irregularities in the upper surface of the roofing material and also allows for relative expansions and contractions such as those due to temperature changes. Preferably and in accordance with a specific feature, the skirt parts are formed with offsets in a manner such as to provide an annular wall portion outside the periphery of the support parts, for additional flexibility.

Another specific feature relates to the provision of sections of adhesive material on the undersides of the edges of the support parts for holding the skirt parts on the roof during application of an adhesive between the peripheries of the skirt parts and the roof surface.

Seal means are secured to the upper end of the upstanding tubular portion defined by the base sections, preferably including a split boot of flexible elastomeric material which is most preferably of a stepped, severable construction for accommodating pipes or other cylindrical objects of various larger sizes. For objects of smaller sizes, a split annular plug is secured on the upper end of the boot, the plug having an opening of a size matched to that of the small object to be sealed and serrated tooth formations are provided in such opening.

Important features of the invention relate to the construction of the split boot and to the manner of installing the boot on the base sections. A pair of lip portions are provided at the split of the boot and are pressed together by a clip of generally channel-shaped configuration which is preferably formed with notches to conform to the stepped configuration of the boot and which is severable according to the size of the pipe.

In accordance with a specific feature, the clip is formed with tooth portions which bite into grooves in the lip portions in a manner and as to insure a highly reliable sealed connection.

Additional features relate to the construction of the plug which includes an outwardly extending annular flange or in an alternate construction, it includes a downwardly facing annular groove receiving an uppermost tubular portion of the stepped boot with tongue and groove means and overhanging flap means being provided at the split of the plug.

Another very important feature relates to a multipurpose adaptor plug which is so arranged as to receive a mastic and to provide a seal around an object or a plurality of objects of a variety of configurations. It may be used for example, for a plurality of pipes, one or more angle irons or for square tubes, objects extending at angles, etc.

Still another feature relates to the provision of annular ribs on the inside of the tubular portion of the base for engagement with the outside of a sheet metal chimney which may be nailed to a roof in new constructions. The device is thus suitable for installation during new construction as well as on existing roofs and can accommodate pipes of a wide range of sizes. It should be understood that the device can be used in conjunction with any elongated object similar to a pipe and the term "pipe" is used herein in a generic sense to include any equivalent type of object.

This invention contemplates other objects, features and advantages which will become more fully apparent from the following detailed description taken in conjunction with the accompanying drawings.

BRIEF DESCRIPTION OF THE DRAWINGS

FIG. 1 is a side elevational view, partly in section, illustrating a device constructed according to the invention installed on a roof to provide a seal to a pipe;

FIG. 2 is a top plan view of the device;

FIG. 3 is a sectional view taken substantially along line III—III of FIG. 2 and showing an interface at the split of a plug of the device;

FIG. 4 is a view similar to FIG. 3, showing an alternative construction;

FIG. 5 is a view of one face of the split of the alternative plug construction of FIG. 4;

FIG. 6 is a view illustrating an inner face of one lip portion of a split boot of the device;

FIG. 7 is a view illustrating an outer face of a second lip portion of the split boot of the device;

FIG. 8 is a sectional view taken substantially along line VIII—VIII of FIG. 1.

FIG. 9 is a sectional view taken substantially along line IX—IX of FIG. 1.

FIG. 10 is a top plan view of a multi-purpose adaptor plug according to the invention;

FIG. 11 is a sectional view taken substantially along line XI—XI of FIG. 10;

FIG. 12 is a perspective view, partly in section, illustrating how the adaptor plug of FIGS. 10 and 11 is used and installed;

FIG. 13 is a side elevational view illustrating a modified base configuration which has an intermediate height profile; and

FIG. 14 is a side elevational view illustrating another modified base configuration which has a low profile.

DESCRIPTION OF A PREFERRED EMBODIMENT

Reference numeral 10 generally designates a roof seal device constructed in accordance with the principles of this invention, and shown installed on a roof 11 to provide a seal to a pipe 12 which extends through an opening 13 in the roof 11. The device 10 is designed for installation on an existing roof to replace a defective seal or for installation on an existing roof after extending a pipe through a new opening cut therethrough. It may be used for objects other than pipes, for objects which project upwardly from a roof without extending therethrough. It may also be used in new construction as hereinafter described. Once installed, it provides a permanent waterproof seal.

The device 10 comprises a base generally designated by reference numeral 14 and including a pair of complementary base sections 15 and 16 which are adapted to be joined together along a generally vertical plane in approximate alignment with an object projecting upwardly from a roof, the plane being through the roof opening 13 in the illustrated arrangement. Sections 15 and 16 together provide an upstanding generally tubular portion and a peripheral portion for engagement with the roof surface about the opening therein. Pipe seal means are secured to the upper end of the base and include a split boot 18 of a flexible elastomeric material which preferably has a plurality of annular step portions 19–22 in vertically spaced planes and tubular portions 23–26 progressively smaller diameters joining the inner edge of each of the step portions and the outer edge of the next higher step portion. An additional tubular portion 27 extends around the upper end of the base. The boot 18 is severable along the top edge of a selected one of the tubular portions 23–27 which has a diameter matching that of a pipe within a larger size range, such as from 3½ to 6 inch pipe, for example. For smaller sizes of pipe, a split annular plug 28 is provided.

The plug 28 has an outwardly projecting annular flange 29 which overlies the uppermost tubular portion 26 of the boot 18 and a clamp 30 is disposed around the tubular wall portion 26, a screw 31 being extended through the ends of the clamp 30. As shown in FIGS. 2 and 3, the split of the plug 28 provides two interengaging faces 32 and 33 which are formed on a bias, i.e. at an angle to a radial plane and which are of mating form with alternating grooves and ridges.

In the alternative as shown in FIGS. 4 and 5 a modified plug 28' may be used including a face 32' having a groove 34 receiving a tongue 35 on a face 33'. The modified plug 28' may be formed with a downwardly facing annular groove 36 which receives the uppermost tubular portion 26 of the boot 18, within the clamp. An integral flap portion 37 projects from the upper side of the face 33' and overlies a portion of the plug 28', adjacent the face 32'. In addition, a flap portion 38 is provided on the outside projecting from the outer side of the face 33' and on the outside of a portion of the plug adjacent the face 32'.

Another feature of the plug 28 is in the provision of annular serrations 40 in the central opening of the plug for engagement with the outside surface of the pipe and to improve the sealing action. The serrations are formed by downwardly facing annular surfaces which are at relatively large angles relative to the horizontal and upwardly facing surfaces which are horizontal or at relatively small angles to the horizontal.

It should be noted that the pipe 12 as illustrated is a conventional pipe, but the plug 28 can be used for other types of objects such as angle and channel-shaped members, for example, and the opening in the plug can be shaped as desired or a multi-purpose plug can be used as hereinafter described in connection with FIGS. 10–12. Also, of course, the openings for pipes should have a size corresponding to the outer diameter of the pipe, and, for example, a plurality of plugs may be supplied for pipe sizes of three inches, two and one-half inches, two inches, one and one-half inches, one and one-quarter inches, one inch, three-quarter inch, one-half inch and three-eights inch. The upper face of the plug, as shown, should have a slight pitch.

The boot 18 at the split therein includes a pair of outwardly projecting interengaging lip portions 41 and 42, the portion 41 having a groove 41*a* therein which receives an integral tongue 42*a* formed on the lip 42. The lips 41 and 42 are secured together by a generally channel-shaped clip 44 including side walls 45 and 46 which are formed with notches which register with each other and with the projections formed by the step and tubular portions of the boot. The screw 31, which secures the clamp 30 in place, may also extend through the upper ends of the side walls of the clip 44 and additional screws 47, 48, 49 and 50 have shank portions extended through openings in side wall 45 thence through openings in the lips 41 and 42 and thence into openings in the side wall 46.

An additional feature of the clip 44 is in the provision turned-in portions 45*a*, 45*b*, 45*c* and 45*d* on wall 45 and turned-in portions 46*a*, 46*b*, 46*c* and 46*d* on wall 46 which form teeth engaged in notches in the lip portions 41 and 42. Thus as illustrated in FIG. 7, the outer face of the lip portion 42 is formed with grooves 42*c*, 42*d*, 42*e* and 42*f* receiving the teeth 46*a*, 46*b*, 46*c* and 46*d* and the lip portion 41 is formed with similar grooves receiving the teeth 45*a*–45*d*.

When the boot 18 is severed for use with a larger size of pipe, the clip 44 is correspondingly severed.

The base sections 15 and 16 include supporting parts 51 and 52 which are of molded, strong and substantially rigid plastic material, preferably an acrylonitrite butadiene styrene material, and skirt parts 53 and 54 of a flexible elastomeric material, preferably an ethylene propylene hydrocarbon material. A portion 55 of the supporting part 51 and a corresponding portion of the other supporting part 52 together provide a generally tubular portion of the base and such portions are preferably formed to provide annular rib formations 56 which are provided for engagement with the outside surface of a chimney which may preferably be formed of sheet metal and secured to a roof opening, such being used in new construction. For use on existing construction, the

rib formations 56 do not engage such a chimney device but they are nevertheless advantageous in reinforcing and rigidifying the supporting parts 51 and 52.

The supporting part 51 further includes a portion 57 which together with a corresponding portion 58 of the other supporting part 52 provide a generally frusto-conical support portion.

The skirt parts 53 and 54 include portions 59 and 60 which together define a generally tubular portion surrounding the tubular portion formed by portion 55 of the supporting part 51 and the corresponding portion of supporting part 52. The skirt parts 53 and 54 further include frusto-conical portions 61 and 62 disposed on the outside of portion 57 of part 51 and the corresponding portion 58 of part 52.

In addition, the skirt parts 53 and 54 include portions 63 and 64 disposed against the upper surfaces of outwardly projecting annular flange portions 65 and 66 and parts 51 and 52.

On the outside of the portions 63 and 64, the skirt parts 53 and 54 include peripheral portions 67 and 68 which are bonded to the upper surface of the roof 11 through a suitable adhesive. Prior to installation, an adhesive strip 69 is secured to the underside of the peripheral flange portion 65 of the supporting part 51 and a corresponding adhesive strip 70 is secured to the underside of the corresponding flange portion 66 of the part 52, such adhesive strips being protected by a suitable release paper which is removed prior to installation so that the device can be accurately positioned on the roof, after which the adhesive is supplied between the lower surfaces of portions 67 and 68 of the skirt parts 53 and 54 and the upper surface portions of the roof.

An important feature is in the provision of wall portions 71 and 72 between the portions 63,64 and 67,68 which provide an offset to accommodate the thicknesses of the flange portion 65 and adhesive strip 69 and the corresponding flange portion and adhesive strip on the opposite side. The portions 71 and 72 are also very important in permitting a flexibility such as to accommodate shifts in position as encountered in the extreme temperature and other environmental conditions to which roof structures are subjected.

FIG. 9 shows how edge portions of the two base sections 15 and 16 are secured together. On one side, the supporting part 51 of base section 15 has an edge portion 73 which is offset radially inwardly to extend on the inside of an edge portion 74 of the supporting part 52 of the base section 16. Such edge portions are secured together through a plurality of metal clips one of which is designated by reference numeral 76 in FIG. 9. The clip 76 is of generally S-shaped configuration and the edge portion 73 is lockeld between inner and intermediate portions thereof while edge portion 74 is locked between intermediate and outer portions thereof, such inner, intermediate and outer portions being preferably formed with integral struck-out tooth portions for biting and locking engagement with the edge portions 73 and 74. The same arrangement is used on the other side but with the edge portion of the supporting part 52 being offset inwardly to extend on the inside of the supporting part 51, the supporting parts 51 and 52 thus having the same configuration. Preferably, at least three metal clips are used on each side, one adjacent the top of the generally cylindrical portion of the base, another adjacent the junction between the cylindrical and frusto-conical portions and a third adjacent the lower and outer end of the frusto-conical portion. Prior to assembly each supporting part may carry clips along the edge portion at one side thereof, in position to receive the mating edge portion of the other supporting part.

As shown in FIG. 1, the lowermost tubular portion 27 of the boot 18 has an inwardly facing annular groove 77 which receives an outwardly projecting annular rib or tongue portion 78 of the supporting part 51, a similar annular rib or tongue portion being provided on the other supporting part 52.

When the device is used in connection with extending pipes through or in mounting an object on an existing roof, or in replacing defecting seals around pipes or other objects, the device is preferably provided with the adhesive strips 69 and 70 and with strips of a protective release paper on the undersides of such adhesive strips. As a preliminary step, the roof surface around a pipe or other object to be sealed is prepared to provide a smooth and firm surface with gravel and dirt being swept away in all directions by means of a brush which may be desirable supplied with the device. Also, the two base sections are brought together around the pipe or other object, the edge portions of the supporting parts 51 and 52 being locked together through the clips 76 as above described. Then after removing the strips of release paper from the undersides of the adhesive strips 69 and 70, the base is carefully centered relative to the pipe or other object and is pressed down against the roof, preferably by stepping down on the portions 63 and 64, the adhesive strips 69 and 70 being then effective to securely hold the base in the proper position relative to the pipe or other projecting object.

After so mounting the base, the installer lifts an extending side flap portion of each of the skirt parts 53 and 54 which overlaps a side edge of the other and applies an adhesive between such flap and side edge portion, firmly pressing them together to provide a reliable seal. The user also lifts the peripheral edge portions 67 and 68 of the skirt parts 53 and 54, applies an adhesive between the undersides of such edge portions and the roof surface portions therebelow and then presses the portions 67 and 68 against the roof surface portions to provide a reliable seal.

The boot 18 is then installed and, if desired, an adhesive is applied between interengaging surfaces of the lip portions 41 and 42 after which the clip 44 is installed with the screws 47–50 being inserted and tightened to firmly clamp the lip portions 41 and 42 together.

If the device is used with a pipe or other cylindrical object having a diameter greater than that corresponding to the upper tubular portion 26 of the boot 18, the boot 18 is cut at the upper edge of the appropriate one of the tubular portions 23–25 prior to installation, the clip 44 is also cut at a corresponding level and a clamp similar to clamp 30 is installed around such tubular portion.

If the device is used with a pipe or other cylindrical object having a diameter corresponding to the upper tubular portion 26, the clamp 30 is used to clamp the portion 26 directly to the pipe or other object.

If the device is used with a pipe or other object having a size less than that corresponding to the upper tubular portion 26, the plug 28 is used, being installed in a position as shown after which the clamp 30 is installed with the screw being tightened.

It is noted that the plug 28 may be formed with a central opening having a shape such as to receive projecting objects which do not have cylindrical shapes,

such as square objects, angle irons, etc. It is also possible to use a multi-purpose adaptor plug arrangement as illustrated in FIGS. 10–12, forming an important feature of the invention. An adaptor plug 80 is provided including a split annular wall portion 81 having an outside cylindrical surface engageable with the inner surface of the uppermost tubular portion 26 of the boot 18 and having an internal surface formed with serrations 82 similar to the serrations 40 of the plug 28. An integral projecting annular flange 83 is provided, similar to the flange 29 of the plug 28 and for the same purpose.

The adaptor plug 80 additionally has a bottom 84 which may preferably be quite thin. In use, the plug 80 is positioned on the top of the boot 18 and the bottom 84 is cut, with a razor blade for example, to an extent necessary to permit the plug to be fully inserted in the upper end of the boot 18 and around one or more pipes or other projecting objects. After marking the position of the bottom 84 relative to the projecting object or objects, the plug is temporarily removed and, as shown in FIG. 12, a special thick adhesive tape 85 is wrapped around the projecting object or objects at a level such as to provide support for the bottom 84 when the plug 80 is then reinserted in the boot. Next a mastic 86 is applied into the plug to fill the space around the projecting object or objects and within the annular wall portion 81.

In FIG. 12, the projecting object is shown as being a square tube 86 extending at an angle but it will be understood that the arrangement can be used with a wide variety of shapes, orientations and members of projecting objects. It is also noted that the plug 80 is not limited to use in connection with a split boot and split base arrangement as illustrated but may be used with non-split boots as in new construction, for example.

It is noted that the roof seal device 10 as illustrated in FIG. 1 has what may be described as a high height profile which is desirable for most applications but a modified device 10', FIG. 13, having an intermediate height profile may be used in some applications and another modified device 10", FIG. 14, having a low height profile may be used in other applications. Device 10" may be used, for example, in providing a seal around a pipe which projects to an elbow only a short distance above the level of a roof.

In all three devices 10, 10' and 10" the size of the boot 18 is the same and it projects just slightly less than 4 inches above the top of the curb or base 14, 14' or 14". In FIG. 1 the height of the curb or base 14 is 8 inches; in FIG. 13, the height of the base 14' is 5 inches; and in FIG. 14, the height of the base 14" is only 1½ inches. In both FIGS. 1 and 13, the overall diameter, including the skirt flange portions 67 and 68 is 20.5 inches and in the low profile base 14" of FIG. 14 it is reduced to 13.625 inches it being noted that the low profile base has no frusto-conical portion. These dimensions are given by way of illustrative example and are not to be construed as limitations except that dimensions and proportions of the same order as described and illustrated are of some importance for obtaining optimum use and performance of the devices.

It is noted that in new construction, the base sections may be secured together prior to use and a sheet metal chimney may be nailed to the new roof about an opening therein after which the base may be inserted on the chimney so secured in position. The device is thus extremely versatile, being usable for both existing and new constructions and being adapted to receive pipes or other objects of a wide variety of sizes and configurations.

It will be understood that modifications and variations may be effected without departing from the spirit and scope of the novel concepts of this invention.

I claim as my invention:

1. In a device for providing a weather-tight seal on a roof around an object projecting upwardly therefrom, a pair of complementary base sections adapted to be joined together along a generally vertical plane in approximate alignment with said object and together providing an upstanding generally tubular portion for surrounding the object and a peripheral flange portion extending outwardly from the lower end of said tubular portion for engaging the upper surface of roofing material about said object, seal means secured to the upper end of said tubular portion for sealing engagement with said object, each of said complementary base sections including a supporting part of a molded, strong and substantially rigid plastic material and a skirt part of a flexible elastomeric material on said support part, each of said skirt parts having edge portions arranged for overlapping interfitting engagement with edge portions of the skirt part of the other section, said skirt parts having peripheral edge portions together providing a downwardly facing surface adapted to engage an annular portion of the upper surface of roofing material about said object, and an adhesive material for sealing and bonding said downwardly facing surface of said skirt parts to said upper surface of said roofing material.

2. In a device as defined in claim 1, said skirt parts being formed of an ethylene propylene hydrocarbon material adapted to withstand temperatures varying over a wide range and adapted to be sealingly secured through said adhesive to the upper surfaces of roofs including both tarred and shingled roofs.

3. In a device as defined in claim 2, said supporting parts being of an acrylonitrite butadiene styrene material.

4. In a device as defined in claim 1, said pipe seal means including a split boot of a flexible elastomeric material for accommodating relative movements of the pipe and roof due to expansion and contraction from heat and cold and to vibrations.

5. In a device as defined in claim 4, said split boot having a pair of engagable lip portions along the split thereof, and a generally channel-shaped metal closure clip arranged to be pressed into said engagable lip portions to press said lip portions together and to provide mechanical support therefor.

6. In a device as defined in claim 4 for use with a cylindrical object, said split boot having a plurality of annular step portions in vertically spaced planes and tubular portions of progressively smaller diameters joining the inner edge of each step portion and the outer edge of the next higher step portion, said boot being severable along the top edge of a selected tubular portion having a diameter matching that of said object.

7. In a device as defined in claim 6, said split boot having a pair of engagable lip portions along the split thereof, and a generally channel-shaped metal closure clip arranged to be pressed onto said engagable lip portions to press said lip portions together and to provide mechanical support therefor, said clip being severable to match the severence of said boot in matching the diameter of said object.

8. In a device as defined in claim 7, said clip including parallel side walls having registering notches for receiv-

ing and interfitting with said step and tubular portions and being severable at the bottom of each notch.

9. In a device as defined in claim 6, a split annular plug defining a central opening for receiving an object having a transverse dimension less than the diameter of the smallest diameter upper end tubular portion of said boot.

10. In a device as defined in claim 9, said split plug having a downwardly facing annular groove receiving said upper end tubular portion of said boot, having at the split thereof mating radially extending tongue and groove means and overhanging flap means, and having inwardly facing annular serrations in said opening for sealing engagement with the object.

11. In a device as defined in claim 8, said clip having pairs of opposed tooth portions adapted to bite into said lip portions adjacent the outer surfaces of said tubular portions.

12. In a device as defined in claim 1, said supporting parts having outwardly extending peripheral edge portions, adhesive means on the underside of said outwardly extending peripheral edge portion of said supporting parts for securing said supporting parts to said roof, said peripheral edge portions of said skirt parts extending outwardly beyond said peripheral edge portions of said supporting parts for providing said downwardly facing surface of said skirt parts.

13. In a device as defined in claim 12, said skirt parts having portions together defining an annular wall projecting upwardly from inner edges of said peripheral edge portions of said skirt parts on the outside of said peripheral edge portions of said supporting parts.

14. In a device as defined in claim 1, said seal means including a plug having a split annular wall adapted to encircle an object and having a relatively thin bottom wall adapted to be cut for extension of the object therethrough, said plug being adapted to be filled with a mastic material.

15. In a device for providing a weather-tight seal on a roof about an object projecting upwardly therefrom, seal means for providing a seal between the object and the upper end of a tubular portion which surrounds the object, said seal means including a plug having a split annular wall adapted to encircle an object and having a relatively thin bottom wall adapted to be cut for extension of the object therethrough, said plug being adapted to be filled with a mastic material.

16. In a device as defined in claim 15, adhesive tape means adapted to be wrapped around the object below said bottom for support of said bottom during filling of said plug with a mastic material.

* * * * *

ALUMI-FLASH & PLASTI-FLASH

The BEST alternative to Pitch Pans!

Both Alumi-Flash & Plasti-Flash are available in a variety of cap styles

Alumi-Flash

Plasti-Flash

RETROFIT FLASHINGS

For existing penetrations that can't be disconnected!

Adapters available for round projections, square projections & angle iron projections

Small

Large

All Retrofit Flashings are available in Black EPDM & NEOPRENE

ROOF DRAINS

AVAILABLE IN 2", 3", 4", 5" AND 6" SIZES

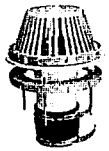

Roof Drain System

Reroof Drain

Scupper Drain

VENTS & BREATHERS

Both models are available as either Vents (one-way) or Breathers (two-way)

Aluminum Model

Plastic Model

DECK-MATE

Flashings for metal roof systems!

Available in sizes for projections from 1/8" diameter up to 26" diameter

Silicone available for HOT pipe applications

PREMOLDED CORNERS

Outside Corners

Inside Corners

Corners are available in EPDM, TPO or NEOPRENE

PIPE PORTAL SYSTEM®

The Pipe Portal comes in two sizes to accomodate projections from 3/8" to 12" in diameter

® Pipe Portal System is a registered trademark of Roof Products & Systems Corp.

INSTALLATION INSTRUCTIONS FOR

PIPE BOOTS

AS HOLDINGS, INC.
v. H&C MILCOR, INC.
Opposition No. 91182064
OPPOSER'S EXHIBIT
13

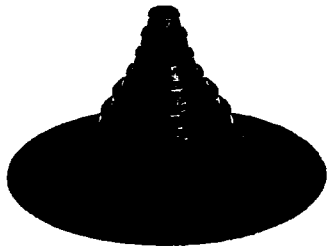

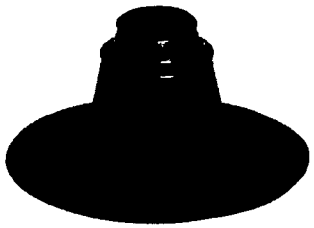

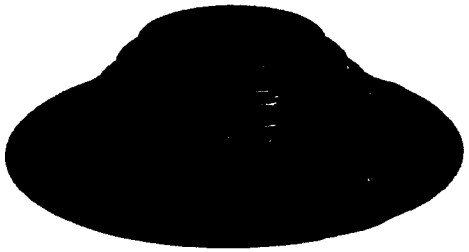

Portals Plus, Inc.

Bensenville, IL OPPOSER **800-PPI-5240**

EXHIBIT
#13 ID

Instruction6

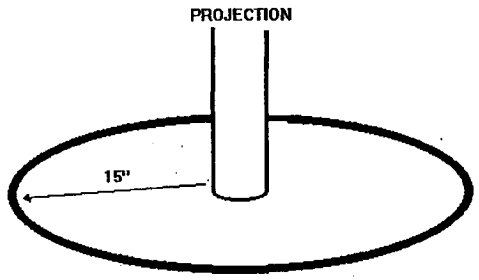

STEP 1
Clean and prepare surface 15" in all directions from the penetration. Check with roofing manufacturer to determine if any special preparations are required.

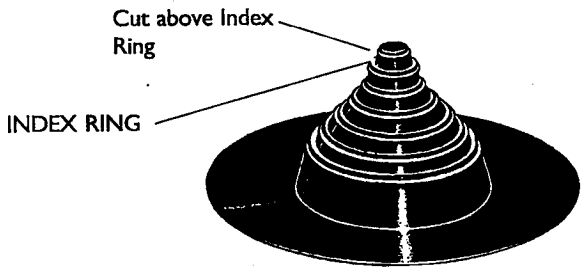

STEP 2
Select proper step of the flashing and cut off above index ring. REMEMBER: When in doubt, cut the smaller size. Clean and prime flange in accordance with roofing manufacturer's recommendations.

PORTALS PLUS INC.

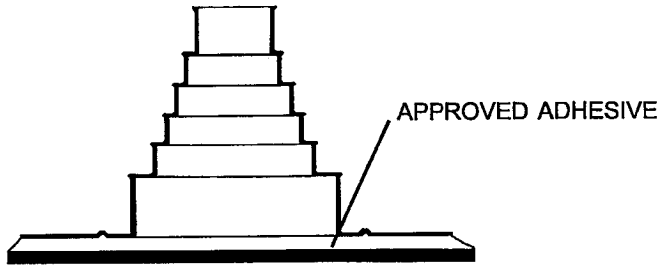

STEP 3
Apply roofing manufacturers' specified adhesive on base flange of boot and place boot around projection and complete attachment of flashing to roofing, according to roofing manufacturers' specification.

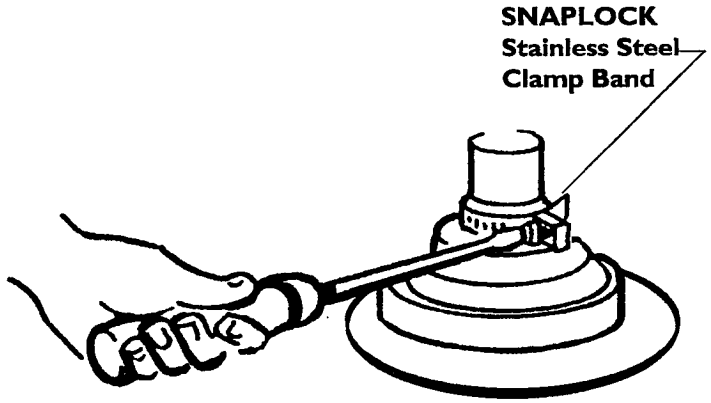

STEP 4
Using the Stainless Steel SnapLock Clamp, place at top of boot and tighten to projection.

Prefabricated Roof Accessories for ALL Roof Systems!

10 03 08

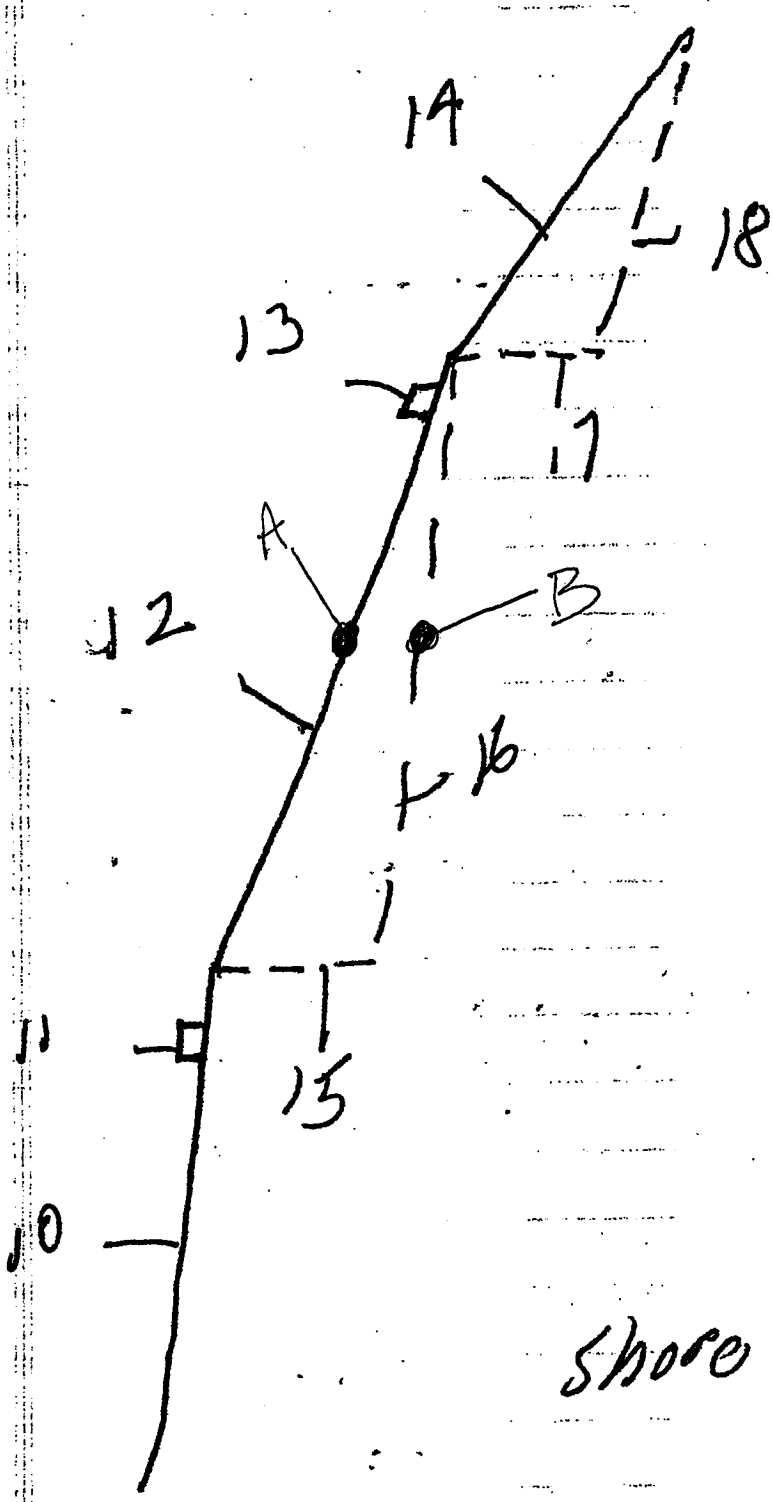

Shore A 60

Opposer's

EXHIBIT

#14 I.D.

10-3-08 S.O'D

AS HOLDINGS, INC.
v. H&C MILCOR, INC.
Opposition No. 91182064
OPPOSER'S EXHIBIT
14

AS HOLDINGS vs. H&C MILCOR
Opposition No. 91182064
Serial No. 76/461,157
Opposers' No. 20

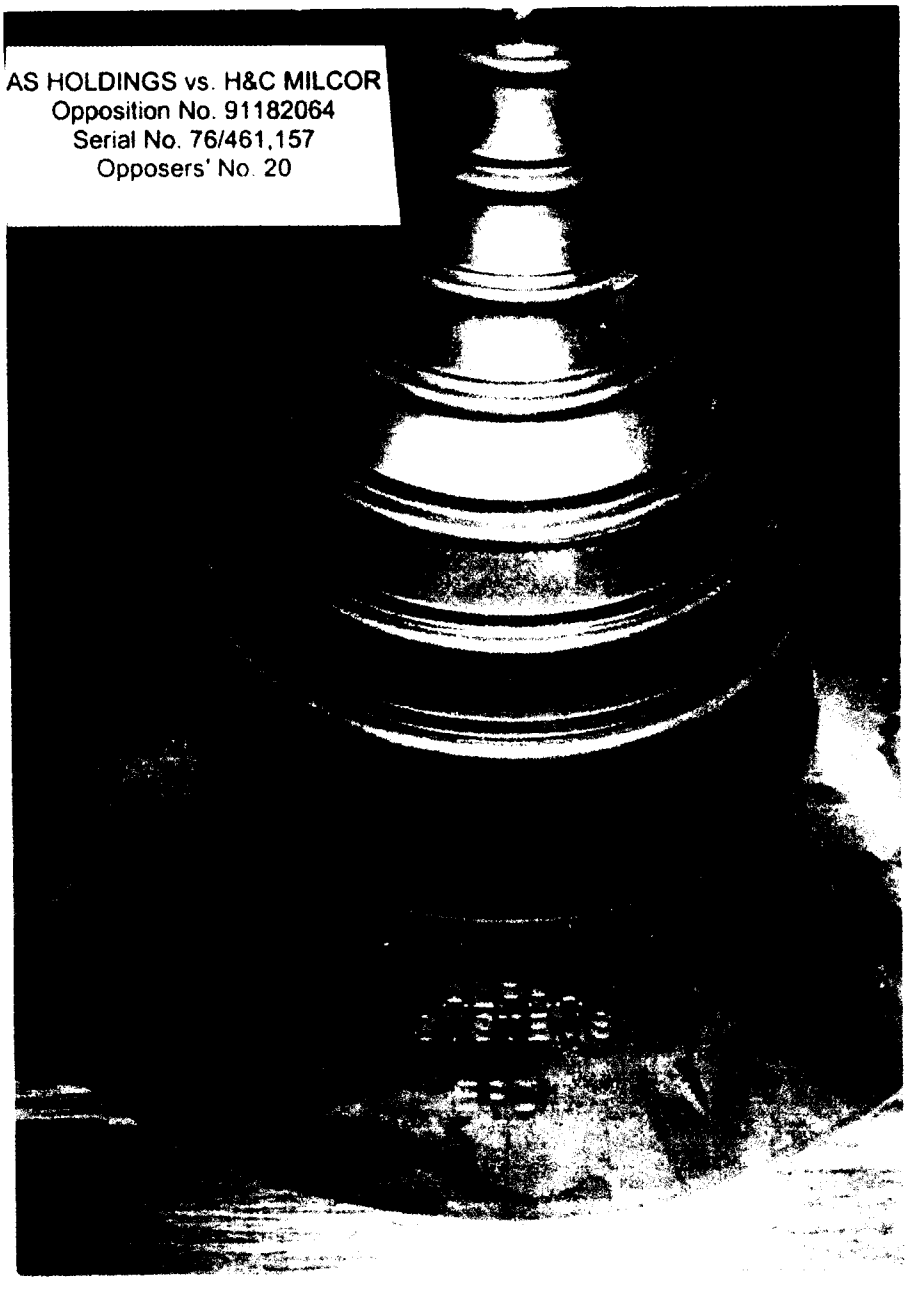

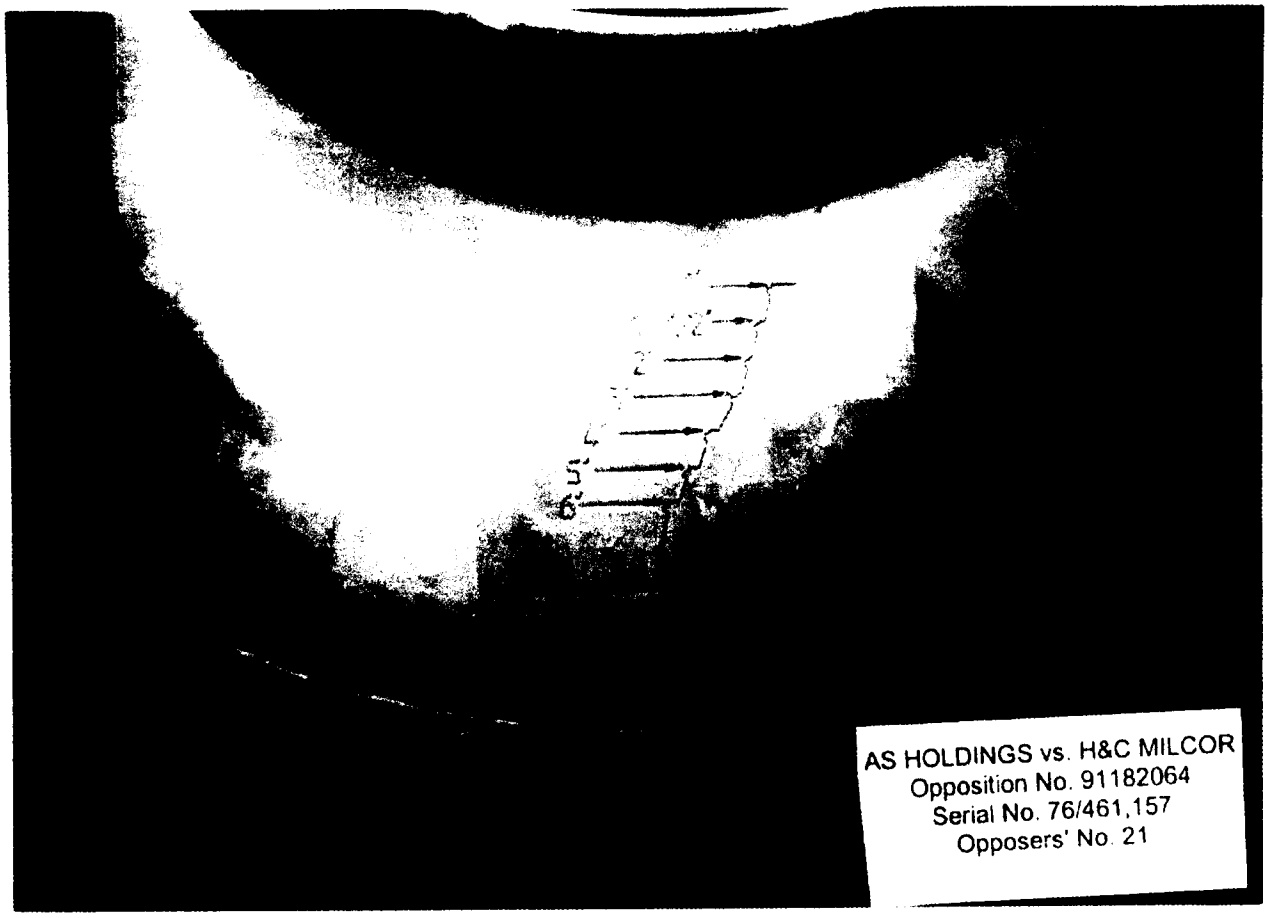

AS HOLDINGS vs. H&C MILCOR
Opposition No. 91182064
Serial No. 76/461,157
Opposers' No. 21

AS HOLDINGS vs. H&C MILCOR
Opposition No. 91182064
Serial No. 76/461,157
Opposers' No. 22

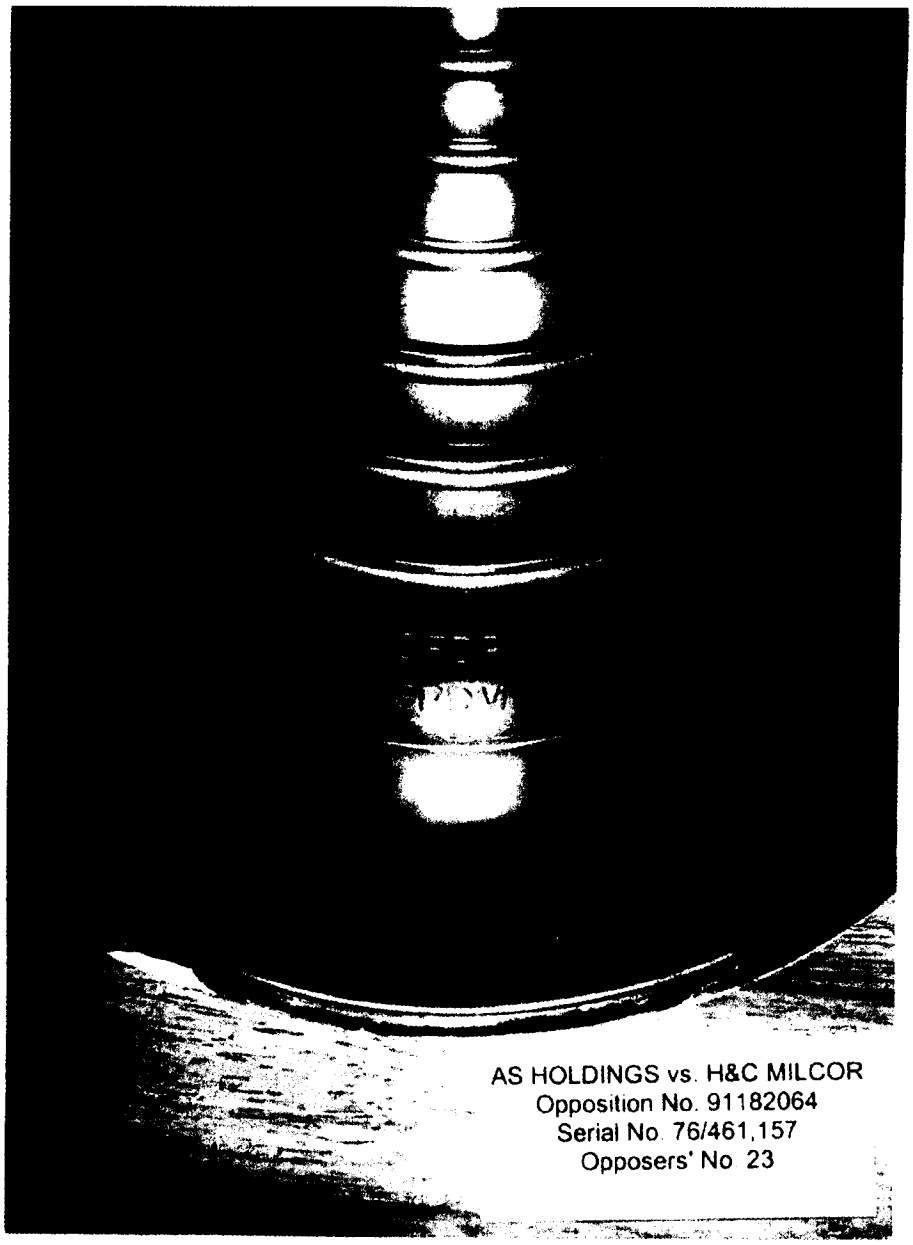
AS HOLDINGS vs. H&C MILCOR
Opposition No. 91182064
Serial No. 76/461,157
Opposers' No. 23

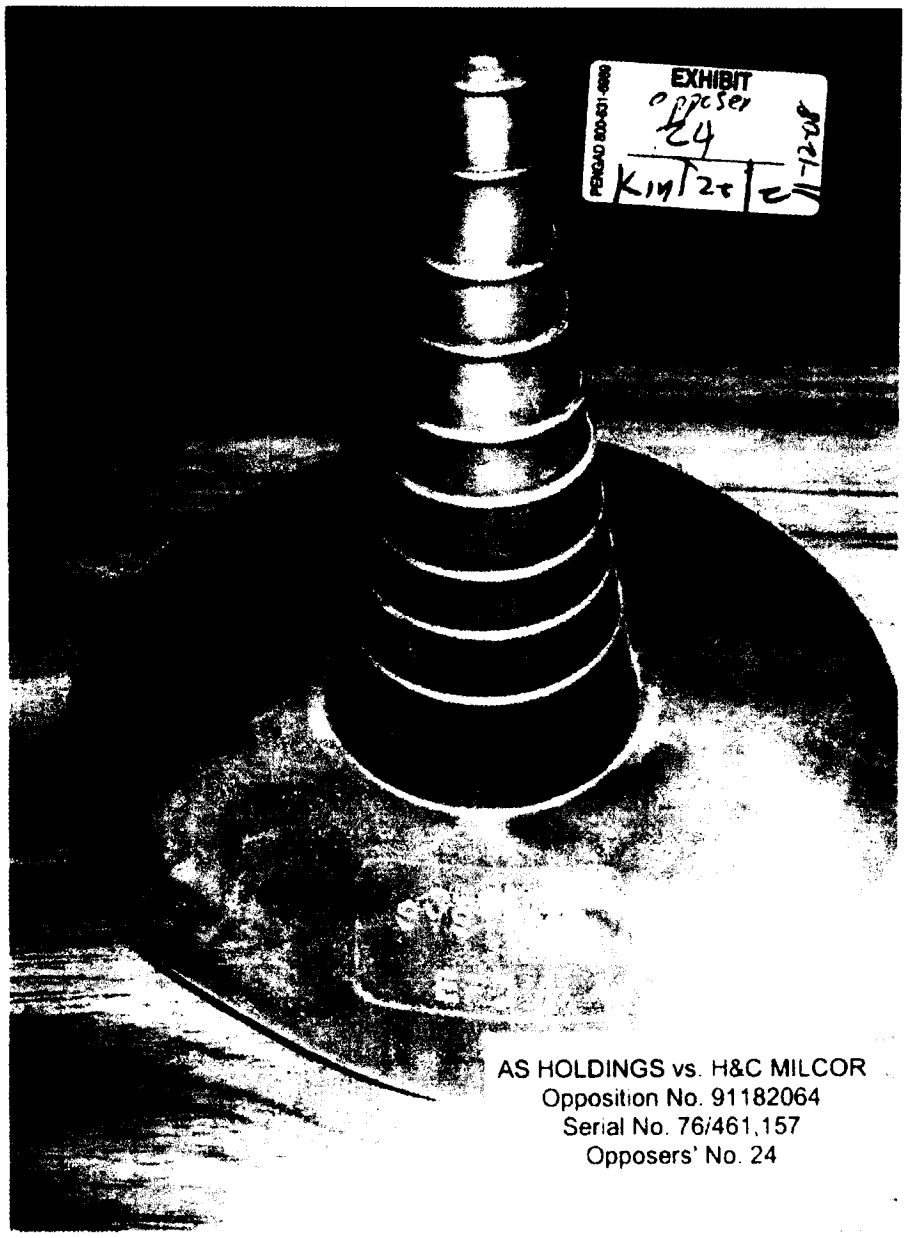

AS HOLDINGS vs. H&C MILCOR
Opposition No. 91182064
Serial No. 76/461,157
Opposers' No. 24

AS HOLDINGS vs. H&C MILCOR
Opposition No. 91182064
Serial No. 76/461,157
Opposers' No. 25

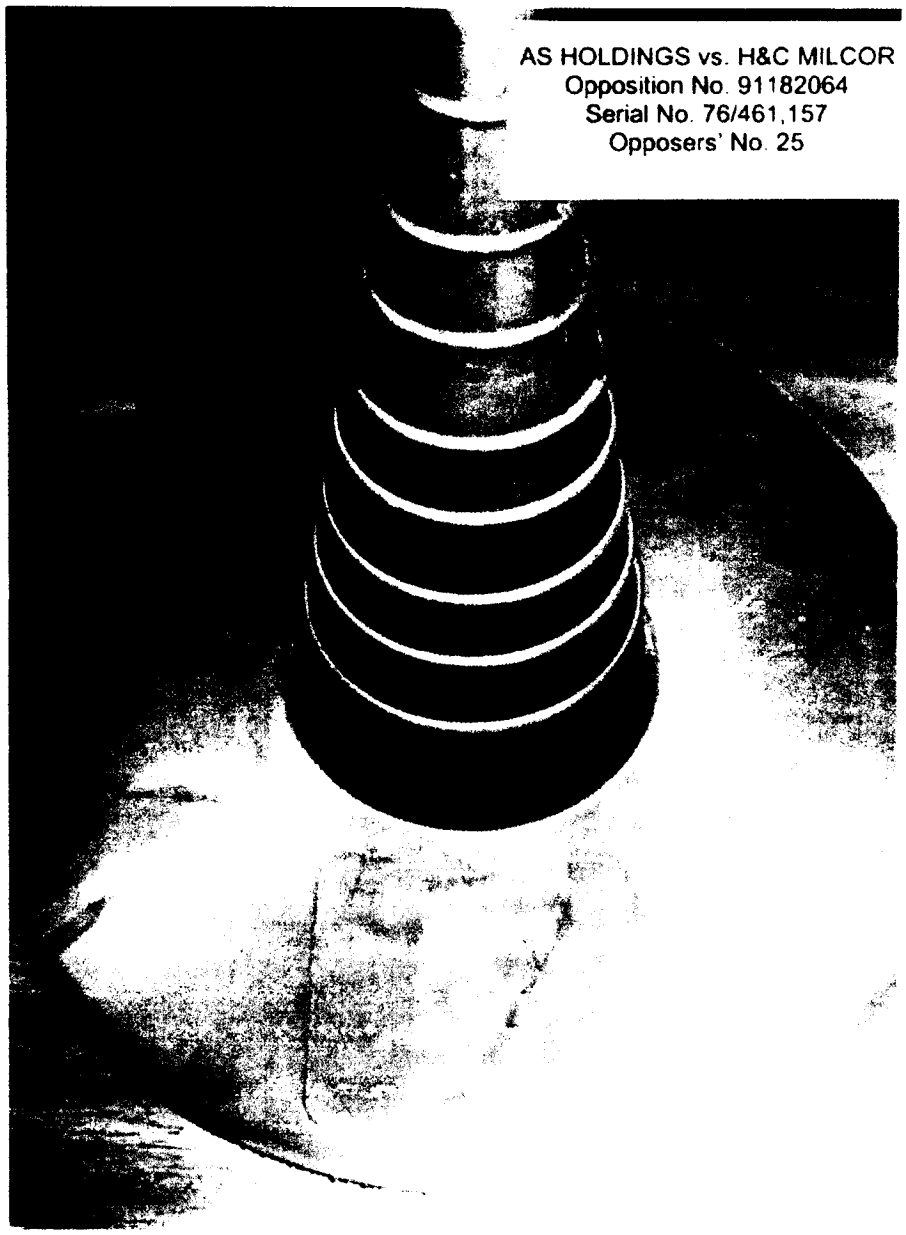

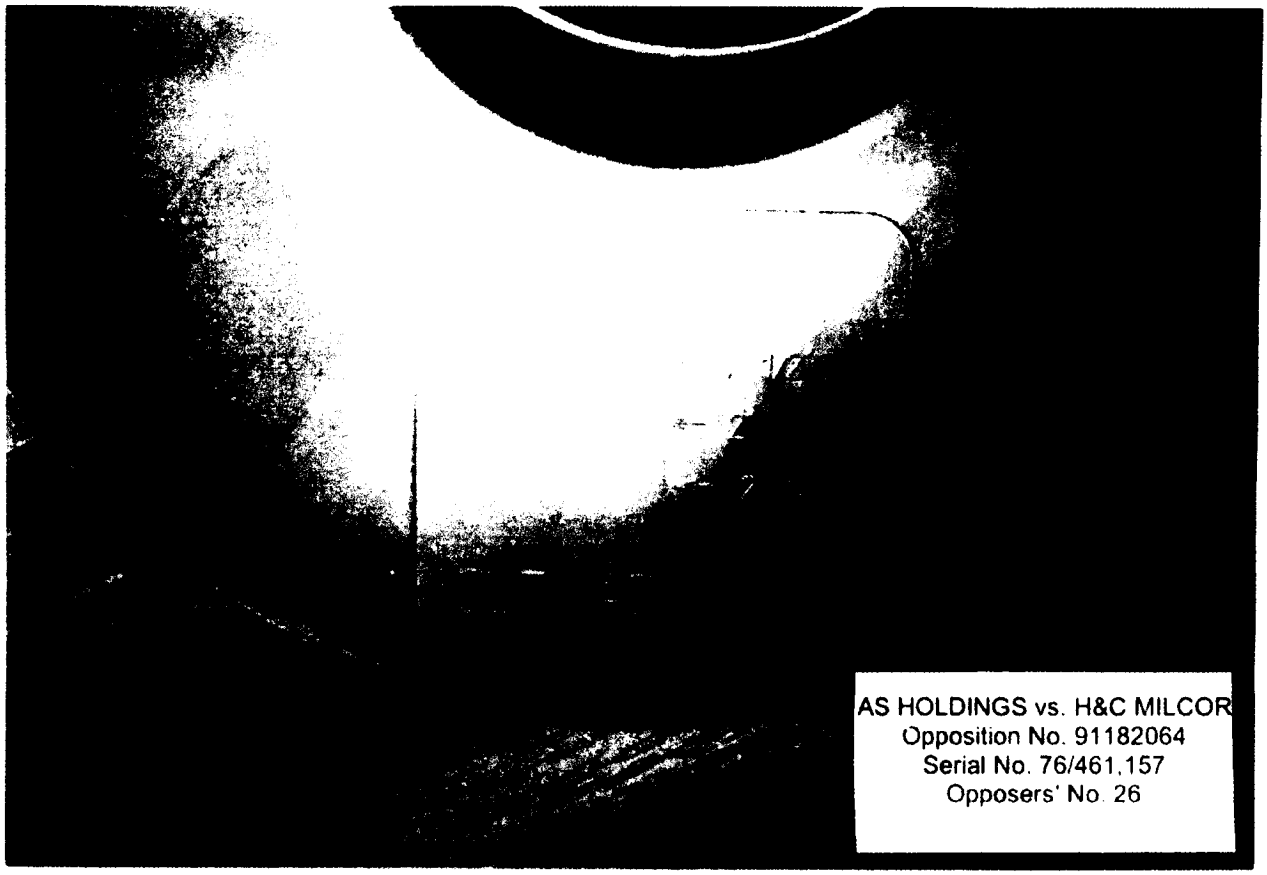
AS HOLDINGS vs. H&C MILCOR
Opposition No. 91182064
Serial No. 76/461,157
Opposers' No. 26

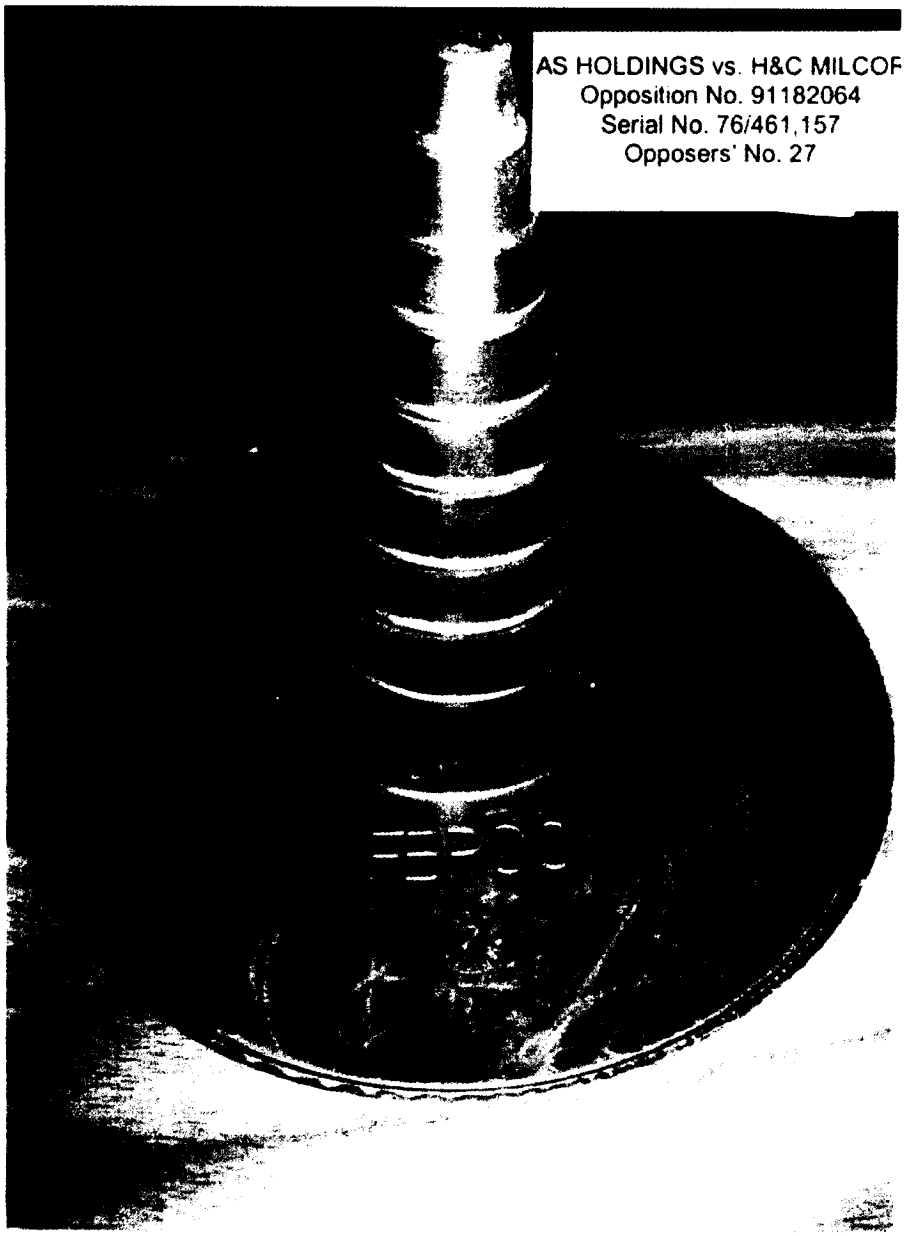

AS HOLDINGS vs. H&C MILCOF
Opposition No. 91182064
Serial No. 76/461,157
Opposers' No. 27

AS HOLDINGS vs. H&C MILCO
Opposition No. 91182064
Serial No. 76/461,157
Opposers' No. 28

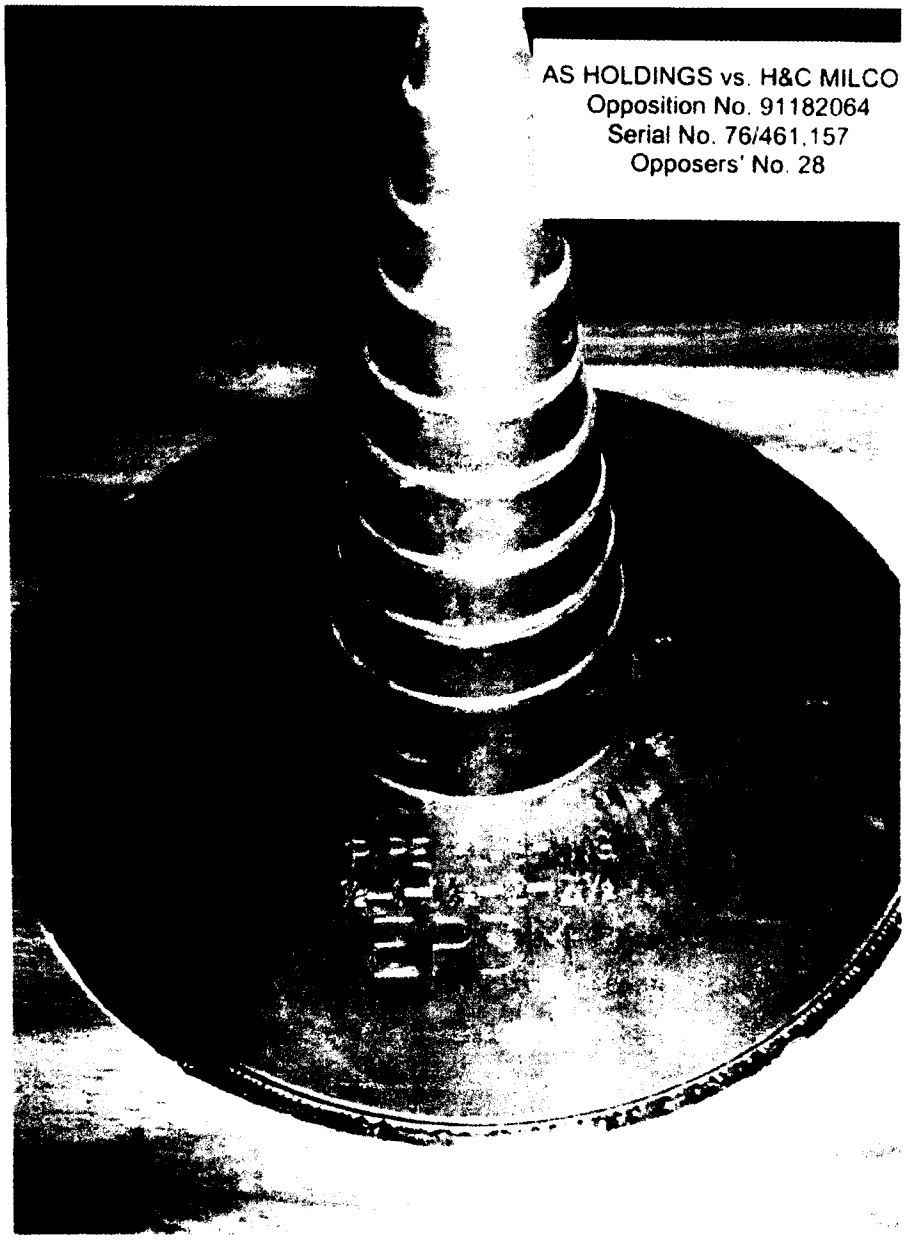

AS HOLDINGS vs. H&C MILCOR
Opposition No. 91182064
Serial No. 76/461,157
Opposers' No. 29

GenFlex
Roofing Systems

- Inside GenFlex
- Contractor Locator
- Distributor Locator
- Contact GenFlex
- What's Happening
- Technical Data
- Cool Roofs
- Links

- **Who Are You?**
- Contractors
- Distributors
- Architects Specifiers
- Building Owners

• 25+ years,
1 billion+ SF of roofing!

• Work with GenFlex to comply with LEED, Cool Roof, Energy Star & Title 24 specs

It's even faster, better, easier, safer and smarter!

Our approach to better roofing performance (pdf)

How do you roof an original? With GenFlex Roofing of course! (pdf)

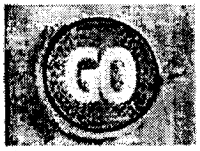

Order our free video and find out how fast Peel & Stick TPO is!

Offer cool savings

Terms of Use

Technology.
Solutions.
Performance.

GenFlex®
Roofing Systems

ALP00483

Technology

Strong chemistry from the very beginning.

GenFlex Roofing Systems was born from General Tire, one of the pioneers of polymers and reinforced plastics, founded in 1915. With the addition of EPDM in 1981, GenFlex became one of the original suppliers of EPDM systems.

By 1995, when GenFlex introduced its first TPO roofing membrane, the company was well on its way to becoming an industry leader. Today, GenFlex serves customers in North America and across the globe.

But to our customers, GenFlex Roofing Systems is simply a dependable provider of innovative, quality commercial roofing products with the sales, training and technical support to ensure a successful experience for anyone who comes in contact with its roofing systems.

More than 25 years. More than 1 billion square feet of roofing.

After 25 years in single-ply commercial roofing, it would be very easy for GenFlex to rest on its laurels. But GenFlex has always focused on the future, taking a leadership role in the industry, pioneering new, more sophisticated roofing products designed specifically to provide greater performance and more environmentally-conscious methods of use. As a result, GenFlex has helped revolutionize the entire roofing industry.

A company of "firsts."

A key to successful growth is research. Important advancements from GenFlex began with two basic questions: "Is there a need?" and "How can we do it better?"

As a result, GenFlex compiled a nationwide team of technicians skilled in the application of all single-ply products to provide field support for its customers.

GenFlex developed the first non-halogenated TPO sheet (now an industry standard) in 1996 and introduced the first 12 foot wide TPO sheet (the widest currently available).

And GenFlex launched the revolutionary Peel & Stick™ TPO system in 2003, one

of the most significant advancements in roofing in the last decade. This series of membranes, flashings and seam tape products expedites the roofing process while eliminating noxious adhesives and cumbersome, heavy equipment on the roof.

Yet, even after 25 years, it feels like GenFlex is just getting warmed up. R&D continues to be a primary focus — along with customer service and high-performance roofing systems.

The goals are simple: stronger, better, easier, faster.

Every roofing product GenFlex develops must serve the goals of roofing contractors and their customers.

That begins with ease of a high quality installation. It has to be simple. It has to be flexible. For the contractor, it has to be profitable.

Then, there's performance and environmental soundness. GenFlex products must perform over the long term. They have to be energy efficient and weather resistant.

They need to last, AND they must be low maintenance. There can be no compromise.

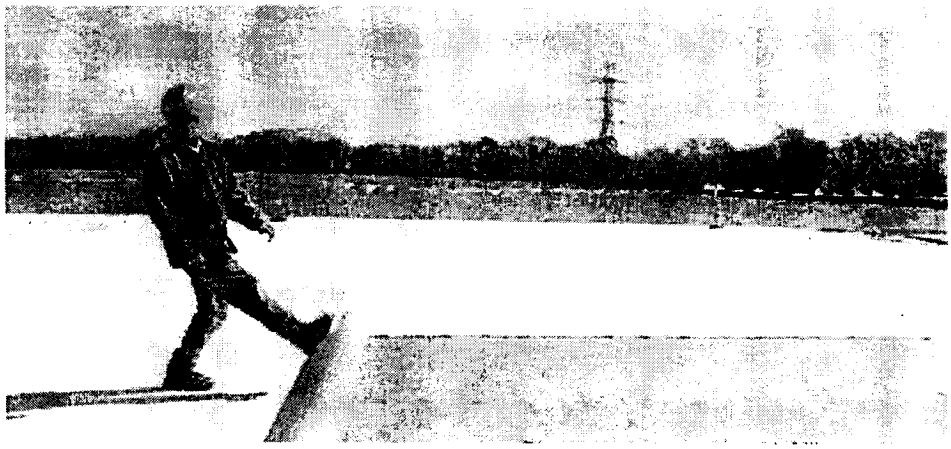

TECHNOLOGY IS OUR HISTORY

- **25-year history of leadership in the roofing industry**
- **Over 1 billion square feet of single-ply membrane sold**
- **The leader in roofing industry firsts**
  - **1st labor-saving 12-foot TPO membrane**
  - **1st non-halogenated TPO sheets, now an industry standard**
  - **1st complete Peel & Stick™ TPO System**
  - **1st to market EPDM Peel & Stick Seam Tape**

Solutions.

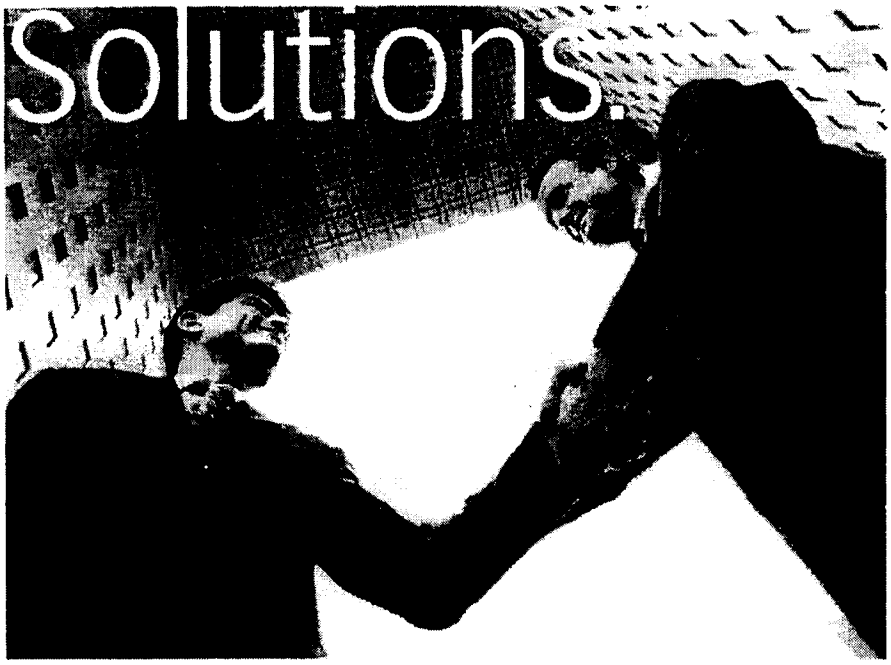

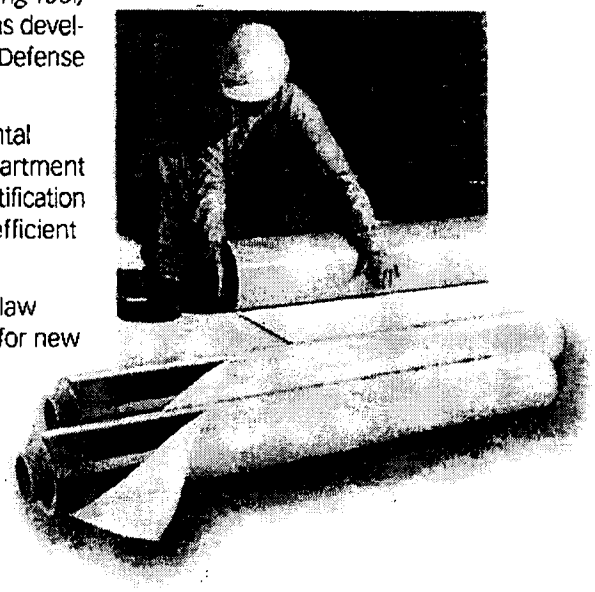

Meeting - and often exceeding - the roofing demands of new construction.

More and more expectations are being placed on products used in new construction and renovation. Terms like "Energy Star" and "Green" and "Cool Roof" are becoming standard vocabulary.

As an industry leader, GenFlex has long invested the resources to develop new products and improve existing ones for greater safety, performance, environmental friendliness and energy savings.

Working from the specs.

In today's demanding construction climate, architects and owners alike must begin roofing projects with a thorough evaluation of parameters: not just the size and scope of the roof, but mitigating factors like the building's planned use, occupant profile, and its surroundings, as well as any rating and code requirements such as LEED, Energy Star and Cool Roofing.

Here's a brief explanation of each:

LEED *(Leadership in Energy and Environmental Design)* – a point system used by the U.S. Green Building Council (USGBC) to promote energy savings and environmental concerns in building design and construction.

Cool Roof – The Cool Roof Rating Council is an independent organization with an accreditation program for reflective roofing materials that meet a certain standard for keeping solar heat out of buildings and increasing energy savings.

SPiRIT *(Sustainable Project Rating Tool)* – Similar to LEED, this system was developed by the U.S. Department of Defense for its construction projects .

Energy Star – The Environmental Protection Agency and the Department of Energy awards Energy Star certification to products 30% more energy efficient than something built to code.

Title 24 – A State of California law enforcing Cool Roof standards for new and retrofit roofs.

At the forefront of the Cool Roof phenomenon.

High solar reflectivity and high infrared emissivity are critical to a Cool Roof system.

All of GenFlex's white and tan TPO systems exceed 70% reflectivity and 70% emissivity to ensure utmost energy conservation and building comfort.

At the same time, these products also reduce environmental concerns such as VOCs, and minimize inconvenience to building occupants.

Nowhere is that more evident than with our latest innovation: the Peel & Stick™ system. Peel & Stick TPO provides Energy Star compliance along with speedy, asphalt fume-free (and heavy equipment-free) installation. All Peel & Stick products - TPO membrane, TPO flashings, pipe boots, seam tape and TPO cover tape - are made ready-to-install with the adhesive pre-applied. After the substrate is prepped, the release liner is peeled away and the membrane is simply rolled or broomed into place.

It's about time.

Today's savvy building contractors and owners look for energy efficiency, environmental soundness and, of course, the primary performance goal of any roofing system: protecting the building.

GenFlex Roofing Systems offers TPO and EPDM single-ply roofing system solutions with a depth of product offerings that can provide superior long term performance with low maintenance, in even the most demanding situations, including high wind uplift resistance, puncture, and hail resistance. Depending on the roofing system selected, full system warranty coverage for up to 20 years is available.

While GenFlex strives for long term performance of their roofing systems, they are always looking for faster, more efficient means of installation. Everything they develop – from fully adhered to mechanically attached to their revolutionary Peel & Stick system – is designed for ease of installation, allowing contractors to complete high quality projects quickly.

SOLUTIONS IN SINGLE PLY

- **GenFlex roofing systems meet today's energy requirements for Cool Roof, LEED, SPIRIT, Energy Star, and other vital rating programs**
- **GenFlex offers multiple solutions to satisfy a wide range of roofing needs, including:**
  - **High wind uplift conditions**
  - **Puncture, abuse, and hail resistance**
  - **High solar reflectivity and high emissivity**
  - **Speedy, low VOC installations**
  - **Long term / low maintenance performance / sustainability**
- **Breadth of product lines**
  - **TPO: 45, 60, 72 & 80 mils in white, grey & tan**
  - **Peel & Stick™ TPO membrane & flashing: 45 & 60 mils**
  - **Broad line of EPDM membranes and Peel & Stick accessories**

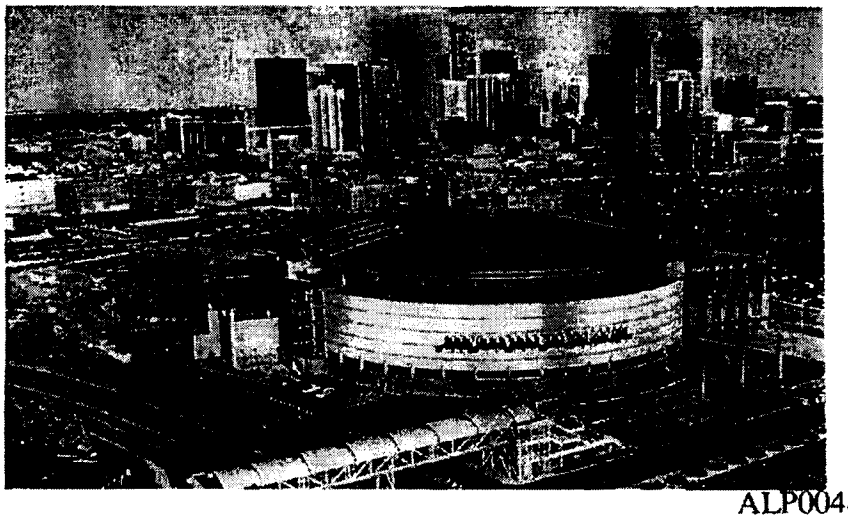

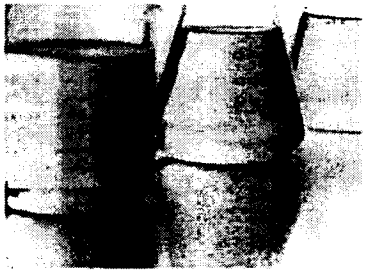

The proof is in our history.

- EPDM = 25+ years
- TPO = 10+ years

In that time, GenFlex Roofing Systems has invested resources in formula enhancements to take advantage of improvements in technology. Things like better heat stabilizers, non-hallogenated TPO, advanced UV stabilizers, Peel & Stick adhesive technology, and new VOC compliant bonding adhesives.

GenFlex products get their muscle in Muscle Shoals.

Here, in Muscle Shoals, Alabama, GenFlex Roofing Systems state-of-the-art extrusion manufacturing facility and testing laboratories develop and make the products that are revolutionizing the thermoplastic roofing industry.

GenFlex membranes are produced using only the highest quality and standard of raw materials and manufacturing processes. So they meet the requirements of approval ratings groups like Factory Mutual (FM), Underwriters Laboratories (UL), Dade County, and International Code Council (ICC).

All GenFlex Roofing Systems high quality membranes, components and systems are designed and tested for weathering, durability, and compatibility. Long term system warranties of up to 20 years are available. Upon request, a Certificate of Analysis report can be provided, documenting actual results of quality control tests that are critical to the performance of the membrane produced.

A roof is only as strong as the team behind it.

Every GenFlex roofing project begins with its national team of field support technicians: experts versed in all aspects of roofing. Together, they cover the U.S. and Canada, lending over 300 years of combined roofing experience.

GenFlex technical representatives are available every step of the way. They can look at the building and the project's

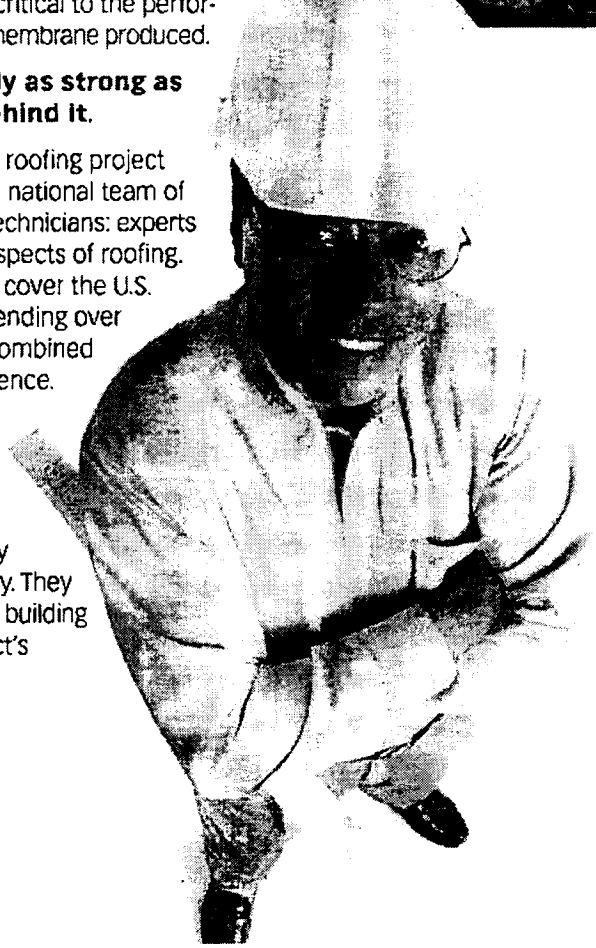

PERFORMANCE TESTED

- **TPO extrusion manufacturing technology at state-of-the-art Muscle Shoals manufacturing facility**
- **Enhancements continue to improve the already long-performing GenFlex TPO formulations and EPDM Peel & Stick accessories**
- **Certificates of Analysis provide specific quality control testing data for the product manufactured for your project**
- **Full system warranties of up to 20 years are available, covering wind, puncture and hail resistance**
- **North American field support—from consultation through installation—by a team of field technical representatives which offers over 300 years of combined roofing experience**
- **In house technical advisors have a broad range of specification and detail knowledge**
- **GenFlex Roofing Systems approved contractors**

parameters, taking into consideration environmental conditions (external and internal), timeline and budget, and make recommendations based on similar projects and successes. Data covering issues such as system installation time and long term performance is also available.

Of course, the key to a successful installation is the crew. Through the GenFlex ***Winner's Circle and Q3 Contractor programs,*** you can find a GenFlex approved contractor committed to ongoing training, excellent workmanship and service.

Contractors can become Q3 Contractors by demonstrating their commitment to quality workmanship, by maintaining a record of perfect inspections after three initial, consecutive perfect inspections. Winner's Circle contractors earn their distinctions annually based on volume. GenFlex also provides technical consultation with its contractors before and during the job when needed.

The proof is on the roof.

Technology. Solutions. Performance.

Like all the formulations that comprise the polymers used in its roofing systems, the GenFlex approach is - and always will be - focused ultimately on long term performance and durability.

The proof is always on the roof. Over the past 25 years GenFlex has developed **technology**-based enhancements to its products and systems that provide **solutions** for building owners, specifiers and contractors while improving the **performance** of its roofing systems.

This progressive approach to roofing is a formula for success that will continue to yield impressive results over the next 25 years and the next billion square feet.

GenFlex®
Roofing Systems

Enlightened thinking.
Better roofing.™

250 East 96th Street
Suite 202
Indianapolis, IN 46240
888/443-4772 www.genflex.com

AS HOLDINGS vs. H&C MILCOR
Opposition No. 91182064
Serial No. 76/461,157
Opposers' No. 30

US007101598B2

(12) **United States Patent**
Hubbard

(10) **Patent No.: US 7,101,598 B2**
(45) **Date of Patent: Sep. 5, 2006**

(54) **SELF ADHERING MEMBRANE FOR ROOFING APPLICATIONS**

(75) Inventor: **Michael J. Hubbard**, Maumee, OH (US)

(73) Assignee: **OM NOVA Solutions Inc.**, Fairlawn, OH (US)

(*) Notice: Subject to any disclaimer, the term of this patent is extended or adjusted under 35 U.S.C. 154(b) by 61 days.

(21) Appl. No.: **10/153,132**

(22) Filed: **May 22, 2002**

(65) **Prior Publication Data**

US 2003/0219564 A1 Nov. 27, 2003

(51) **Int. Cl.**
B32B 9/00 (2006.01)
B32B 33/00 (2006.01)

(52) **U.S. Cl.** **428/40.1**; 428/141

(58) **Field of Classification Search** 428/40.1, 428/40.3, 55, 61, 141, 192
See application file for complete search history.

(56) **References Cited**

U.S. PATENT DOCUMENTS

3,900,102	A *	8/1975	Hurst	206/411
4,038,454	A	7/1977	Lehmann et al.	
4,091,135	A	5/1978	Tajima et al.	
4,539,344	A	9/1985	Van Ornum et al.	
4,656,062	A	4/1987	Harriett	
4,736,552	A *	4/1988	Ward et al.	52/94
4,757,652	A *	7/1988	Kalkanoglu	52/173
4,778,852	A	10/1988	Futamura	
4,910,059	A	3/1990	Sancaktar	
4,965,119	A	10/1990	Sancaktar	
4,978,703	A	12/1990	Ainsworth et al.	
5,162,436	A	11/1992	Davis et al.	
5,256,228	A	10/1993	Davis et al	
5,286,798	A	2/1994	Davis et al.	
5,322,724	A	6/1994	Levens	
5,370,755	A	12/1994	Davis et al.	
5,389,715	A	2/1995	Davis et al.	
5,468,550	A *	11/1995	Davis et al.	428/327
5,496,615	A *	3/1996	Bartlett et al	428/144
5,516,829	A	5/1996	Davis et al.	
H1735	H *	6/1998	Hansen et al	524/505
6,004,645	A *	12/1999	Hubbard	428/57
6,080,458	A	6/2000	Russell et al	
6,235,365	B1 *	5/2001	Schaughency et al	428/40.1
6,696,125	B1	2/2004	Zanchetta et al.	
2003/0008094	A1 *	1/2003	Zickell	428/40.1
2003/0195287	A1	10/2003	Fisher	

FOREIGN PATENT DOCUMENTS

EP	352 394	*	1/1990
JP	05-306561	*	11/1993
JP	407189437	*	7/1995
JP	08-337764		12/1996
JP	2003113662	*	4/2003
WO	WO 98/56866		12/1998
WO	WO 99/22935	*	5/1999

OTHER PUBLICATIONS

RD 226007, Feb. 1983, RD, Unknown.*

* cited by examiner

Primary Examiner—William P. Watkins, III
Assistant Examiner—Patricia L. Nordmeyer
(74) *Attorney, Agent, or Firm* Jagtiani + Guttag

(57) **ABSTRACT**

A preformed, self adhering single ply roofing membrane including a water impermeable membrane; a pressure sensitive, hot melt adhesive adhered to one side of the water impermeable membrane, and a release liner on the side of the pressure sensitive, hot melt adhesive opposite of the water impermeable membrane.

21 Claims, 1 Drawing Sheet

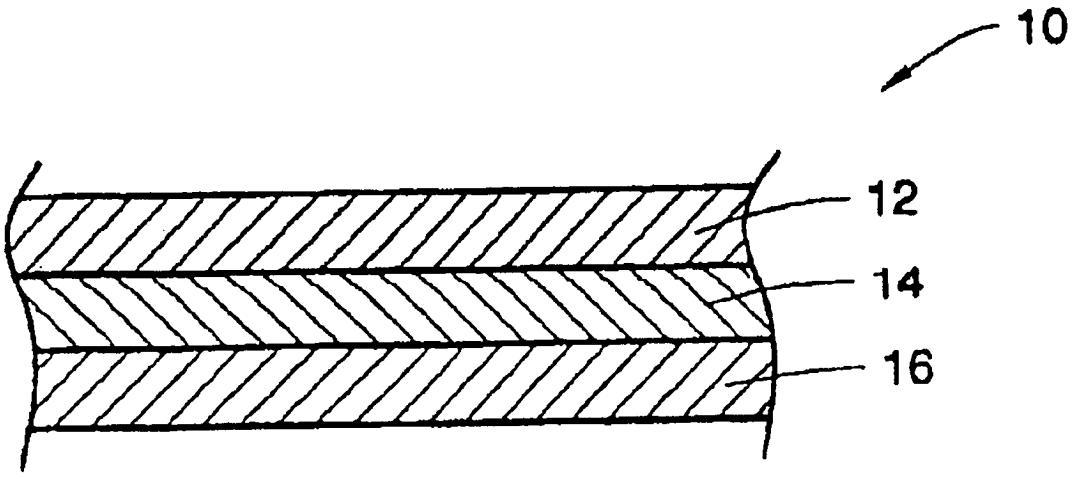

ALP00552

US006866732B2

(12) **United States Patent**
Hubbard et al.

(10) **Patent No.: US 6,866,732 B2**
(45) **Date of Patent: *Mar. 15, 2005**

(54) **METHOD FOR SEAMING WIDE PANELS OF EPDM MEMBRANE TO FORM A COMPOSITE EPDM ROOFING MEMBRANE**

(75) Inventors: **Michael J. Hubbard**, Holland, OH (US); **Walter J. Kelly**, Wadsworth, OH (US); **Anthony Verrocchi**, Akron, OH (US); **Raymond J. Weinert**, Macedonia, OH (US)

(73) Assignee: **OMNOVA Solutions Inc.**, Fairlawn, OH (US)

(*) Notice: Subject to any disclaimer, the term of this patent is extended or adjusted under 35 U.S.C. 154(b) by 0 days.

This patent is subject to a terminal disclaimer.

(21) Appl. No.: **10/629,136**

(22) Filed: **Jul. 29, 2003**

(65) **Prior Publication Data**

US 2004/0020585 A1 Feb. 5, 2004

Related U.S. Application Data

(62) Division of application No. 09/197,140, filed on Nov. 20, 1998, now Pat. No. 6,615,892.

(51) Int. Cl.[7] **B32B 31/08**
(52) U.S. Cl. **156/71**; 156/157; 156/304.6
(58) **Field of Search** 156/71, 157, 304.1, 156/304.6, 574

(56) **References Cited**

U.S. PATENT DOCUMENTS

4,343,667 A * 8/1982 Hollis 156/157
4,931,126 A * 6/1990 McCarville et al. 156/304.6
5,545,685 A * 8/1996 Davis et al. 524/490

* cited by examiner

Primary Examiner—John T. Haran
(74) *Attorney, Agent, or Firm*—Larry R. Meenan

(57) **ABSTRACT**

A method and apparatus for continuously seaming cured EPDM membrane to form a composite sheet of predetermined width and indefinite length. The method includes the steps of providing at least two rolls of cured EPDM membrane having longitudinal marginal edges and feeding the cured EPDM membrane from the at least two rolls in a first direction. The longitudinal marginal edges of the cured EPDM membranes are positioned in an overlapping relationship as the cured EPDM membranes are fed in the first direction and then the overlapping longitudinal marginal edges are continuously seamed to form a composite sheet of indefinite length.

8 Claims, 6 Drawing Sheets

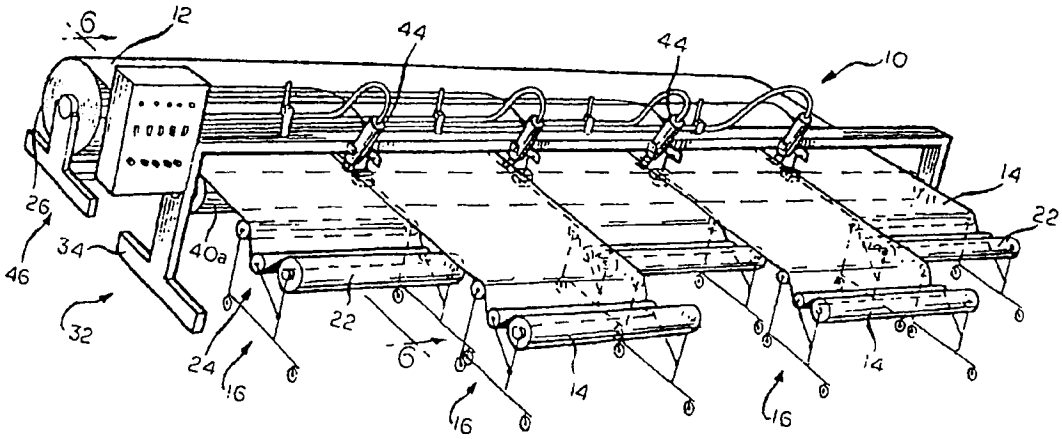

ALP00553

US006615892B2

(12) **United States Patent**
Hubbard et al.

(10) **Patent No.: US 6,615,892 B2**
(45) **Date of Patent: *Sep. 9, 2003**

(54) **METHOD AND APPARATUS FOR SEAMING WIDE PANELS OF EPDM MEMBRANE TO FORM A COMPOSITE EPDM ROOFING MEMBRANE**

(75) Inventors: **Michael J. Hubbard**, Holland, OH (US); **Walter J. Kelly**, Wadsworth, OH (US); **Anthony Verrocchi**, Akron, OH (US); **Raymond J. Weinert**, Macedonia, OH (US)

(73) Assignee: **Omnova Solutions Inc.**, Fairlawn, OH (US)

(*) Notice: This patent issued on a continued prosecution application filed under 37 CFR 1.53(d), and is subject to the twenty year patent term provisions of 35 U.S.C. 154(a)(2).

Subject to any disclaimer, the term of this patent is extended or adjusted under 35 U.S.C. 154(b) by 0 days.

(21) Appl. No.: **09/197,140**

(22) Filed: **Nov. 20, 1998**

(65) **Prior Publication Data**

US 2002/0003026 A1 Jan. 10, 2002

(51) **Int. Cl.**[7] **B32B 31/08**

(52) **U.S. Cl.** **156/428**; 156/516; 156/544; 156/546; 156/549

(58) **Field of Search** 156/71, 428, 494, 156/543, 544, 546, 549, 516, 555

(56) **References Cited**

U.S. PATENT DOCUMENTS

3,065,121	A	*	11/1962	Andrews	156/201
4,050,972	A	*	9/1977	Cardinal, Jr.	156/71
4,337,112	A	*	6/1982	Hollis	156/351
4,343,667	A		8/1982	Hollis	
4,737,213	A	*	4/1988	Paeglis et al.	156/157
4,931,126	A	*	6/1990	McCarville et al.	156/304.6
5,460,672	A	*	10/1995	Mallonee	156/73.4
5,545,685	A	*	8/1996	Davis et al.	524/490

* cited by examiner

Primary Examiner—Michael W. Ball
Assistant Examiner—John T. Haran
(74) *Attorney, Agent, or Firm*—Larry R. Meenan; Robert F. Rywalski

(57) **ABSTRACT**

A method and apparatus for continuously seaming cured EPDM membrane to form a composite sheet of predetermined width and indefinite length. The method includes the steps of providing at least two rolls of cured EPDM membrane having longitudinal marginal edges and feeding the cured EPDM membrane from the at least two rolls in a first direction. The longitudinal marginal edges of the cured EPDM membranes are positioned in an overlapping relationship as the cured EPDM membranes are fed in the first direction and then the overlapping longitudinal marginal edges are continuously seamed to form a composite sheet of indefinite length.

20 Claims, 6 Drawing Sheets

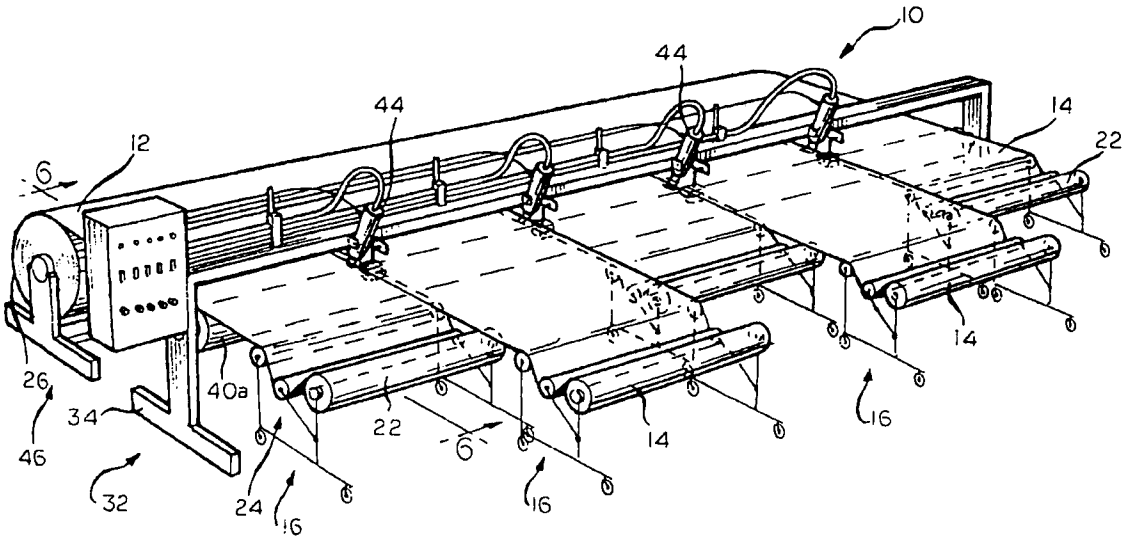

ALP00554

US006607793B2

(12) **United States Patent**
Hubbard et al.

(10) **Patent No.: US 6,607,793 B2**
(45) **Date of Patent: *Aug. 19, 2003**

(54) **LARGE WIDTH HEAT-WELDABLE ROOF MEMBRANE**

(75) Inventors: **Michael J. Hubbard**, Holland, OH (US); **Raymond J. Weinert**, Macedonia, OH (US); **John Pomeroy**, Greensburg, PA (US)

(73) Assignee: **Omnova Solutions Inc.**, Fairlawn, OH (US)

(*) Notice: This patent issued on a continued prosecution application filed under 37 CFR 1.53(d), and is subject to the twenty year patent term provisions of 35 U.S.C. 154(a)(2).

Subject to any disclaimer, the term of this patent is extended or adjusted under 35 U.S.C. 154(b) by 0 days.

(21) Appl. No.: **09/280,034**

(22) Filed: **Mar. 26, 1999**

(65) **Prior Publication Data**

US 2002/0102422 A1 Aug. 1, 2002

(51) **Int. Cl.**[7] **F16B 5/07**, B32B 3/00; B32B 27/08; D06N 7/04; E04B 5/00

(52) **U.S. Cl.** **428/33**; 428/58; 428/61; 428/141; 428/515; 52/409

(58) **Field of Search** 428/57, 141, 500, 428/515, 33, 54, 58, 61; 52/749.12, 746.11, 408, 409; 156/71, 308.4

(56) **References Cited**

U.S. PATENT DOCUMENTS

4,855,172 A		8/1989	Chiu	428/57
5,204,148 A		4/1993	Alexander et al.	428/40
5,206,068 A		4/1993	Kalkanoglu	428/143
5,256,228 A	*	10/1993	Davis et al.	156/157
5,260,111 A		11/1993	Valaitis et al.	428/57
5,306,548 A		4/1994	Zabrocki et al.	428/215
5,322,724 A		6/1994	Levens	428/57
5,468,550 A	*	11/1995	Davis et al.	428/327
5,486,387 A		1/1996	Mueller	428/34.7
5,523,136 A		6/1996	Fischer et al.	428/35.2
5,525,426 A		6/1996	Kulzick et al.	428/412
5,545,685 A		8/1996	Davis et al.	524/490
5,569,516 A	*	10/1996	Paeglis et al.	428/58
6,253,528 B1	*	7/2001	Hubbard et al.	52/746.11

* cited by examiner

Primary Examiner—Paul Thibodeau
Assistant Examiner—Sheeba Ahmed
(74) *Attorney, Agent, or Firm*—Larry R. Meenan; Robert F. Rywalski; David G. Burleson

(57) **ABSTRACT**

A large width single-ply heat-weldable roof membrane. The roof membrane includes at least two sheets of a thermoplastic polyolefin and one fold strip of a thermoplastic elastomer. The sheets have side edges. The fold strip is bonded to the sheets to join the sheets and form the large width single-ply roof membrane. The thermoplastic elastomer consists of a highly cross-linked rubbery polymer and a thermoplastic polymer.

9 Claims, 1 Drawing Sheet

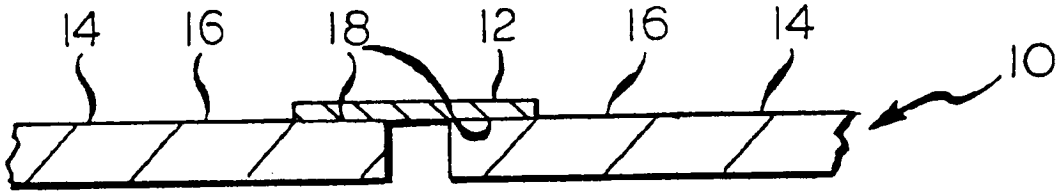

ALP00555

US006394166B2

(12) **United States Patent**
Hubbard et al.

(10) **Patent No.: US 6,394,166 B2**
(45) **Date of Patent: May 28, 2002**

(54) **APPARATUS FOR APPLYING TPO ADHESIVE TO A SINGLE-PLY ROOFING MEMBRANE**

(75) Inventors: **Michael J. Hubbard**, Holland; **Walter J. Kelly**, Wadsworth; **Anthony Verrocchi**, Akron; **Raymond J. Weinert**, Macedonia, all of OH (US)

(73) Assignee: **Omnova Soltuions Inc.**, Fairlawn, OH (US)

(*) Notice: Subject to any disclaimer, the term of this patent is extended or adjusted under 35 U.S.C. 154(b) by 0 days.

(21) Appl. No.: **09/735,259**

(22) Filed: **Dec. 12, 2000**

Related U.S. Application Data

(63) Continuation of application No. 09/196,850, filed on Nov. 20, 1998, now Pat. No. 6,253,528.

(51) **Int. Cl.**[7] **E04D 15/07**

(52) **U.S. Cl.** **156/575**; 156/578; 52/749.12; 222/146.5; 222/413

(58) **Field of Search** 156/575, 578, 156/71; 52/746.11, 749.12, 746.1; 222/413, 146.5

(56) **References Cited**

U.S. PATENT DOCUMENTS

4,087,309 A * 5/1978 Lang 156/578
4,629,094 A * 12/1986 Vogel et al. 222/413
4,725,328 A * 2/1988 Arnold 52/746.11
5,110,398 A * 5/1992 Murphy 156/575

* cited by examiner

Primary Examiner—Michael Safavi
(74) *Attorney, Agent, or Firm*—Robert F. Rywalski; Larry R. Meenan

(57) **ABSTRACT**

An apparatus and method of applying a bead of TPO or TPE adhesive between a talc-free first roofing membrane and an overlapping talc-free second roofing membrane. The apparatus includes a movably supported chassis and an extruder attached to the chassis having a nozzle including an outlet having at least one opening for applying the TPO or TPE adhesive between the first membrane and the overlapping second membrane to adhere the overlapping second membrane to the first membrane. The TPO or TPE adhesive is heated within the apparatus allowing application along the seam between the first and second membranes. The outlet of the nozzle is positioned between the first and second membranes with the TPO or TPE adhesive applied between the overlapping portions of the membranes while pressing the overlapping first and second membranes to hold the overlapping portions together.

17 Claims, 2 Drawing Sheets

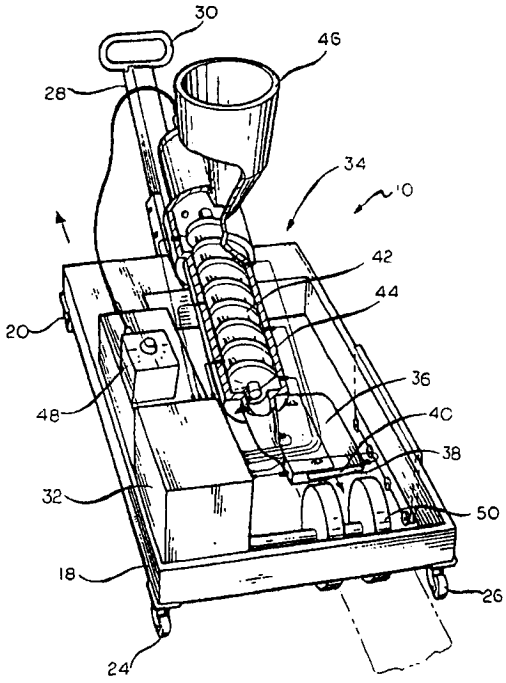

ALP00556

US00RE37683E

(19) United States
(12) Reissued Patent
Briddell et al.

(10) Patent Number: US RE37,683 E
(45) Date of Reissued Patent: Apr. 30, 2002

(54) ADHESIVE COMPOSITION AND METHOD FOR PROVIDING WATER-TIGHT JOINTS IN SINGLE-PLY ROOFING MEMBRANES

(75) Inventors: **Brian J. Briddell**, Jackson, MI (US); **Michael J. Hubbard**, Holland, OH (US)

(73) Assignee: **Adco Products, Inc.**, Raleigh, NC (US)

(21) Appl. No.: **09/770,036**

(22) Filed: **Jan. 26, 2001**

Related U.S. Patent Documents

Reissue of:
(64) Patent No.: **5,242,727**
Issued: **Sep. 7, 1993**
Appl. No.: **07/792,458**
Filed: **Nov. 15, 1991**

U.S. Applications:

(63) Continuation-in-part of application No. 07/637,628, filed on Jan. 4, 1991, now abandoned.

(51) **Int. Cl.**[7] **C08L 23/16**; C08L 23/22; C08L 23/28; C08L 61/06

(52) **U.S. Cl.** **428/42**; 428/355; 525/145; 525/154; 525/87; 525/235; 525/236; 525/237; 525/240

(58) **Field of Search** 428/42, 355; 525/145, 525/154, 87, 235, 236, 237, 240

(56) **References Cited**

U.S. PATENT DOCUMENTS

3,654,005 A	*	4/1972	Higgins et al.	156/108
3,962,018 A	*	6/1976	Costemalle et al.	156/306
4,588,637 A	*	5/1986	Chiu	428/355
4,601,935 A	*	7/1986	Metcalf et al.	428/57
4,603,164 A	*	7/1986	Chmiel et al.	524/432
4,671,996 A	*	6/1987	Cantor	428/343
4,737,528 A	*	4/1988	Musch et al.	523/335
4,742,119 A	*	5/1988	Close	525/211
4,855,172 A	*	8/1989	Chiu	428/57
4,881,996 A	*	11/1989	Nussbaum et al.	156/157
5,095,068 A		3/1992	Chiu	524/525

OTHER PUBLICATIONS

Order Granting in Part Carlisle's Motion for Summary Judgment, *ADCO Products, Inc. v. Carlisle Syntec Incorporated*, C.A. Case No. 99-359-RRM (U.S. District Court for the District of Delaware), dated Aug. 11, 2000.

Carlisle's Motion for Summary Judgment of Invalidity, *ADCO Products, Inc. v. Carlisle Syntec Incorporated*, C.A. Case No. 99-359-RRM (U.S. District Court for the District of Delaware), dated Apr. 14, 2000.

Memorandum in Support of Carlisle's Motion for Summary Judgment of Invalidity, *ADCO Products, Inc. v. Carlisle Syntec Incorporated*, C.A. Case No. 99-359-RRM (U.S. District Court for the District of Delaware), dated Apr. 14, 2000.

Letter from ADCO Products, Inc. to Judge McKelvie, *ADCO Products, Inc. v. Carlisle Syntec Incorporated*, C.A. Case No. 99-359-RRM (U.S. District Court for the District of Delaware), dated Jul. 28, 2000.

* cited by examiner

Primary Examiner—Nathan M. Nutter
(74) *Attorney, Agent, or Firm*—Banner & Witcoff, Ltd.

(57) **ABSTRACT**

A cured adhesive tape composition for adhering together roofing materials such as synthetic EPDM rubber and which provides long term water tightness is provided. The adhesive composition includes substantially equal amounts by weight of a) a rubbery polymer comprising a blend of an ethylene-propylenediene terpolymer, a halogenated butyl rubber or a halogenated copolymer of p-methylstyrene and isobutylene, and polyisobutylene b) a compatible tackifier, and c) an accelerator/cure package for the rubbery polymer. The cured composition exhibits a peel strength of at least 715 grams/cm at room temperature, at least 300 grams/cm at 70° C., and supports a static load of at least 300 grams at 70° C.

18 Claims, No Drawings

ALP00557

US006291542B1

(12) **United States Patent**
Hubbard et al.

(10) **Patent No.: US 6,291,542 B1**
(45) **Date of Patent: Sep. 18, 2001**

(54) **METHOD AND APPARATUS FOR SELECTIVELY CURING A SHEET OF EPDM MATERIAL**

(75) Inventors: **Michael J. Hubbard**, Holland; **Walter J. Kelly**, Wadsworth; **Anthony Verrocchi**, Akron; **Raymond J. Weinert**, Macedonia, all of OH (US)

(73) Assignee: **Omnova Solutions Inc.**, Fairlawn, OH (US)

(*) Notice: Subject to any disclaimer, the term of this patent is extended or adjusted under 35 U.S.C. 154(b) by 0 days.

(21) Appl. No.: **09/197,742**

(22) Filed: **Nov. 20, 1998**

(51) **Int. Cl.**[7] **C08F 2/46**; B32B 3/10

(52) **U.S. Cl.** **522/158**; 522/150; 522/157; 522/161; 428/141; 428/147; 264/494

(58) **Field of Search** 522/157, 150, 522/158, 161, 149; 428/141, 142, 147; 264/494, 495, 496, 31

(56) **References Cited**

U.S. PATENT DOCUMENTS

4,458,128 * 7/1984 Chabinsky ..... 219/10.55 R
4,680,071 * 7/1987 Candle 156/218
4,803,020 2/1989 Valaitis et al. 264/22

* cited by examiner

Primary Examiner—James J. Seidleck
Assistant Examiner—Sanza McClendon
(74) *Attorney, Agent, or Firm*—Larry R. Meenan; Robert F. Rywalski

(57) **ABSTRACT**

A method and apparatus for selectively curing a sheet of ethylene-propylene diene termonomer (EPDM) material to form a roofing membrane for installation on a roof deck. The method includes the steps of providing a sheet formed of ethylene-propylene diene termonomer, the sheet having a field and longitudinal edge areas bordering the field; and then simultaneously shielding at least one edge area of the EPDM sheet and exposing at least the field to a source of radiation to cure at least the field of the EPDM sheet and provide a selectively cured EPDM roofing membrane. Also disclosed is the product formed by the method of the present invention.

8 Claims, 3 Drawing Sheets

ALP00558

US006253528B1

(12) **United States Patent**
Hubbard et al.

(10) **Patent No.: US 6,253,528 B1**
(45) **Date of Patent: Jul. 3, 2001**

(54) **APPARATUS FOR APPLYING TPO ADHESIVE TO A SINGLE-PLY ROOFING MEMBRANE**

(75) Inventors: **Michael J. Hubbard**, Holland; **Walter J. Kelly**, Wadsworth; **Anthony Verrocchi**, Akron; **Raymond J. Weinert**, Macedonia, all of OH (US)

(73) Assignee: **Omnova Solutions Inc.**, Fairlawn, OH (US)

(*) Notice: Subject to any disclaimer, the term of this patent is extended or adjusted under 35 U.S.C. 154(b) by 0 days.

(21) Appl. No.: **09/196,850**

(22) Filed: **Nov. 20, 1998**

(51) **Int. Cl.**[7] **E04G 21/16**

(52) **U.S. Cl.** **52/746.11**; 52/749.12; 156/71

(58) **Field of Search** 52/746.11, 749.12, 52/746.1; 156/71, 575

(56) **References Cited**

U.S. PATENT DOCUMENTS

3,122,862	*	3/1964	Figge	156/575
4,602,978	*	7/1986	Eckstein	156/575
4,613,396	*	9/1986	Scarborough	156/575
5,110,398	*	5/1992	Murphy	156/575
5,256,228		10/1993	Davis et al. .	
5,260,111		11/1993	Valaitis et al. .	
5,370,755		12/1994	Davis et al. .	
5,486,249		1/1996	Valaitis et al. .	
5,512,118		4/1996	Davis et al. .	
5,582,890		12/1996	Davis et al. .	

* cited by examiner

Primary Examiner—Michael Safavi
(74) *Attorney, Agent, or Firm*—Robert F. Rywalski; Larry R. Meenan

(57) **ABSTRACT**

An apparatus and method of applying a bead of TPO or TPE adhesive between a talc-free first roofing membrane and an overlapping talc-free second roofing membrane. The apparatus includes a movably supported chassis and an extruder attached to the chassis having a nozzle including an outlet having at least one opening for applying the TPO or TPE adhesive between the first membrane and the overlapping second membrane to adhere the overlapping second membrane to the first membrane. The TPO or TPE adhesive is heated within the apparatus allowing application along the seam between the first and second membranes. The outlet of the nozzle is positioned between the first and second membranes with the TPO or TPE adhesive applied between the overlapping portions of the membranes while pressing the overlapping first and second membranes to hold the overlapping portions together.

5 Claims, 2 Drawing Sheets

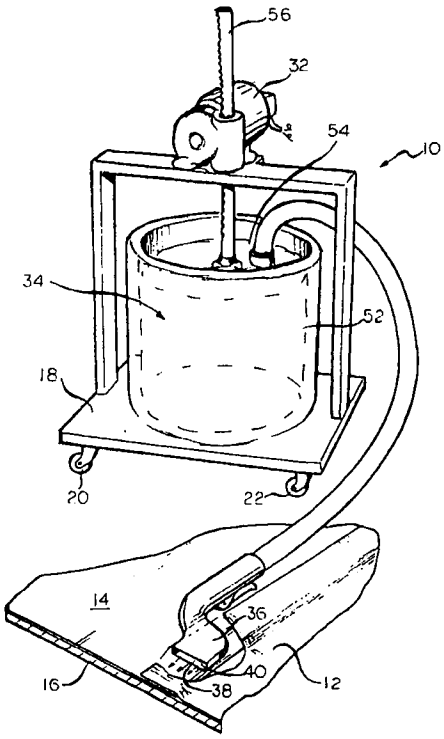

ALP00559

US006238502B1

(12) **United States Patent**
Hubbard

(10) **Patent No.: US 6,238,502 B1**
(45) **Date of Patent: *May 29, 2001**

(54) SINGLE-FLY MEMBRANE ROOFING SYSTEM

(75) Inventor: **Michael J. Hubbard**, Holland, OH (US)

(73) Assignee: **Omnova Solutions Inc.**, Fairlawn, OH (US)

(*) Notice: This patent issued on a continued prosecution application filed under 37 CFR 1.53(d), and is subject to the twenty year patent term provisions of 35 U.S.C. 154(a)(2).

Subject to any disclaimer, the term of this patent is extended or adjusted under 35 U.S.C. 154(b) by 0 days.

(21) Appl. No.: **09/140,160**

(22) Filed: **Aug. 26, 1998**

Related U.S. Application Data

(62) Division of application No. 08/706,027, filed on Aug. 30, 1996, now Pat. No. 6,004,645.

(51) **Int. Cl.**[7] **B32B 7/08**; B32B 7/12; E04B 1/62; E04D 5/06; E04D 5/14

(52) **U.S. Cl.** **156/71**; 156/290; 156/291; 156/308.4; 52/552; 52/746.11; 52/410

(58) **Field of Search** 156/71, 308.4, 156/290, 291; 52/552, 746.11, 410

(56) **References Cited**

U.S. PATENT DOCUMENTS

4,671,036 * 6/1987 Sullivan .
4,718,211 * 1/1988 Russell et al. .
5,775,052 * 7/1998 Mayle .

* cited by examiner

Primary Examiner—Sam Chuan Yao
(74) *Attorney, Agent, or Firm*—Robert F. Rywalski; Larry R. Meenan

(57) **ABSTRACT**

A method of applying a roof membrane assembly to a roof deck. The method includes the steps of providing a roof membrane assembly including a first roof membrane and a second roof membrane. The first roof membrane has at least one longitudinally extending edge and the second roof membrane overlaps the first roof membrane and is bonded along at least one longitudinally extending edge of the first roof membrane to define a membrane flap having a longitudinally extending edge. The roof membrane assembly is then positioned upon the roof deck and at least one roof membrane fastening device is positioned over the first roof membrane and beneath the longitudinally extending membrane flap and secured through the first roof membrane and into the roof deck. The longitudinally extending edge of the membrane flap is then bonded to the first roof membrane.

13 Claims, 2 Drawing Sheets

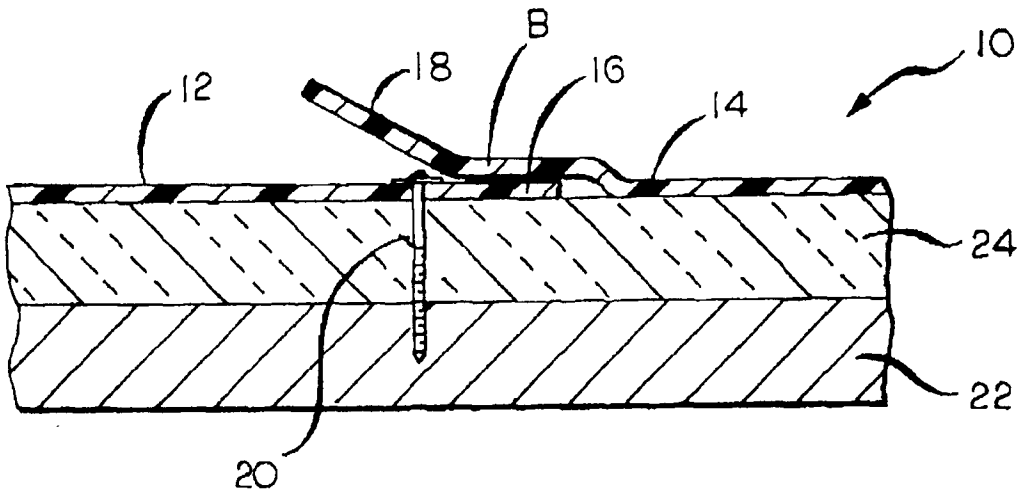

ALP00560

US006187122B1

(12) **United States Patent**
Hubbard et al.

(10) **Patent No.: US 6,187,122 B1**
(45) **Date of Patent: *Feb. 13, 2001**

(54) **DUAL-WELD ROOF MEMBRANE WELDING APPARATUS AND METHOD OF USING SAME**

(75) Inventors: **Michael J. Hubbard**, Hollard; **John Jordon**, Waterville, both of OH (US)

(73) Assignee: **Omnova Solutions Inc.**, Fairlawn, OH (US)

(*) Notice: Under 35 U.S.C. 154(b), the term of this patent shall be extended for 0 days.

This patent is subject to a terminal disclaimer.

(21) Appl. No.: **09/203,702**

(22) Filed: **Dec. 2, 1998**

Related U.S. Application Data

(63) Continuation of application No. 08/803,356, filed on Feb. 20, 1997, now Pat. No. 5,935,357.

(51) **Int. Cl.**[7] **B32B 31/00**

(52) **U.S. Cl.** **156/82**; 156/497; 156/499; 156/544; 156/574

(58) **Field of Search** 156/82, 497, 499, 156/544, 545, 574

(56) **References Cited**

U.S. PATENT DOCUMENTS

4,744,855 * 5/1988 Ellenberger 156/499
4,834,828 * 5/1989 Murphy 156/574
4,872,941 * 10/1989 Lippman 156/497
5,353,782 * 10/1994 Morris 156/82
5,935,357 * 8/1999 Hubbard 156/499

* cited by examiner

Primary Examiner—Michael W. Ball
Assistant Examiner—Gladys Piazza
(74) *Attorney, Agent, or Firm*—Robert F. Rywalski; Larry R. Meenan

(57) **ABSTRACT**

A dual-weld heat welding apparatus capable of simultaneously welding a first membrane and an overlapping second membrane on opposite sides of a roof membrane fastening apparatus fastened through the first membrane and located under the overlapping second membrane. The heat welding apparatus includes a movably supported chassis, a hot air welder attached to the chassis including a nozzle having an outlet including at least one opening for simultaneously applying a weld on opposite sides of the roof membrane fastener to weld the overlapping second membrane and the first membrane, and at least one weld wheel rotatably attached to the chassis and located rearward of the nozzle relative to the direction of movement of the apparatus and capable of simultaneously applying pressure to the weld on each side of the roof membrane fastener.

17 Claims, 9 Drawing Sheets

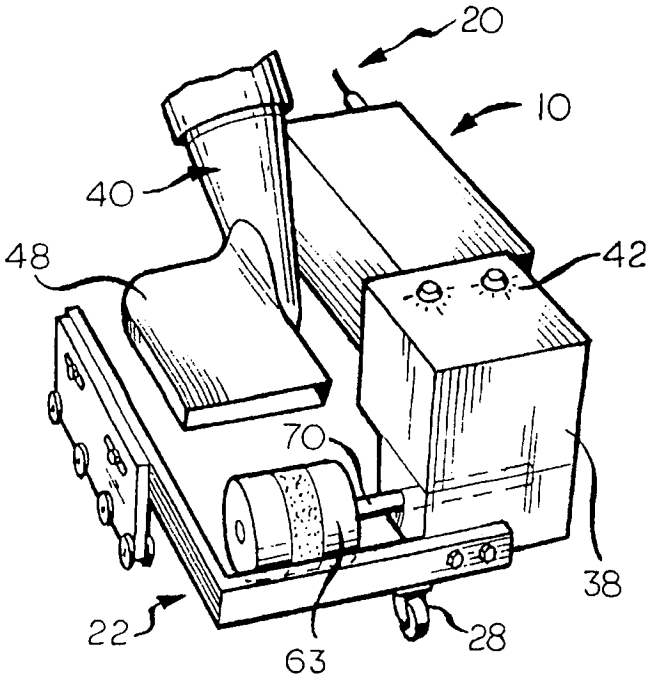

ALP00561

US006093354A

United States Patent [19]

Hubbard et al.

[11] Patent Number: 6,093,354

[45] Date of Patent: Jul. 25, 2000

[54] METHOD OF CONTINUOUSLY CURING A SHEET FORMED OF EPDM MATERIAL

[75] Inventors: **Michael J. Hubbard**, Holland; **Walter J. Kelly**, Wadsworth; **Anthony Verrocchi**, Akron; **Raymond J. Weinert**, Macedonia, all of Ohio

[73] Assignee: **Omnova Solutions Inc.**, Fairlawn, Ohio

[21] Appl. No.: **09/203,165**

[22] Filed: **Dec. 1, 1998**

[51] **Int. Cl.**[7] **B32B 31/06**; B29C 71/02

[52] **U.S. Cl.** **264/171.1**; 156/228; 156/244.11; 264/175; 264/176.1; 264/236

[58] **Field of Search** 264/171.1, 175, 264/176.1, 211.24, 236, 173.11, 173.16, 173.19; 156/228, 244.11

[56] **References Cited**

U.S. PATENT DOCUMENTS

4,220,579	9/1980	Rinehart	260/33.6
4,337,112	6/1982	Hollis	156/351
4,707,413	11/1987	Kehr et al.	428/440
4,724,107	2/1988	Barrows	264/25
4,771,090	9/1988	Jehr et al.	524/68
4,803,020	2/1989	Valaitis et al.	264/22
4,894,408	1/1990	Hazelton et al.	524/425
5,415,822	5/1995	Cook	264/171
5,486,249	1/1996	Valaitis et al. .	
5,714,545	2/1998	Lee et al.	525/193
5,733,621	3/1998	Cotskis et al.	428/42.3

OTHER PUBLICATIONS

Rubber Technology 3rd edition, ed. Maruice Morton, Van Nostrand Reinhold, 1987, pp 260–283.

Primary Examiner—Jan H. Silbaugh
Assistant Examiner—Mark Eashoo
Attorney, Agent, or Firm—Robert F. Rywalski; Larry R. Meenan

[57] **ABSTRACT**

A method of continuously manufacturing and curing in-line a sheet of ethylene-propylene diene monomer to form an EPDM roofing membrane. The method includes the steps of forming a continuous sheet material of ethylene-propylene diene monomer and then continuously heating and pressing the sheet material to partially cure the sheet material and remove any voids within the sheet material. The partially cured sheet material is then continuously fed through a curing oven to fully cure the sheet material to form EPDM roofing membrane.

22 Claims, 3 Drawing Sheets

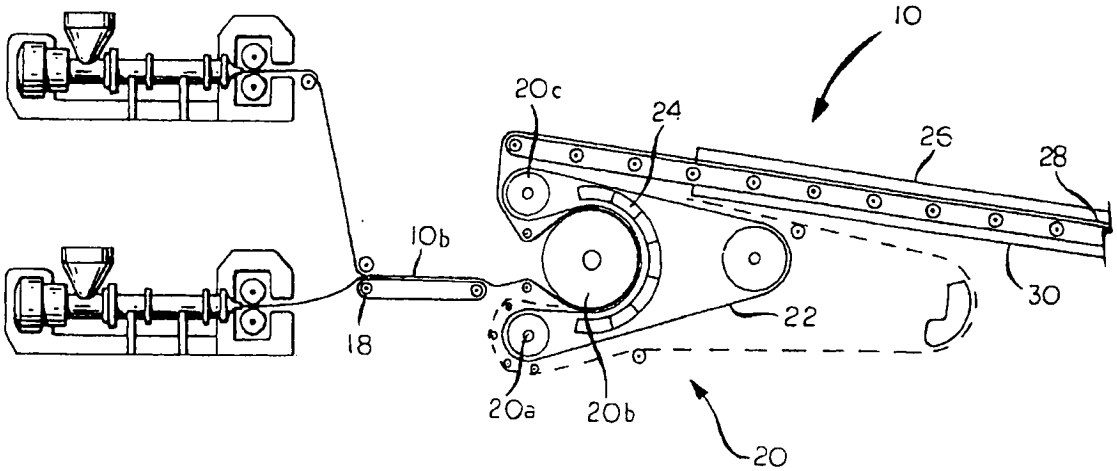

ALP00562

US006055786A

United States Patent [19]

Hubbard et al.

[11] Patent Number: 6,055,786

[45] Date of Patent: *May 2, 2000

[54] HEAT WELD INDICATOR FOR THERMOPLASTIC ROOFING MEMBRANE

[75] Inventors: Michael J. Hubbard, Holland; Jeannemarie DeTorre, Maumee; Keith Watt, Sylvania; Raymond J. Weinert, Macedonia, all of Ohio

[73] Assignee: OMNOVA Solutions Inc., Fairlawn, Ohio

[*] Notice: Under 35 U.S.C. 154(b), the term of this patent shall be extended for 206 days.

[21] Appl. No.: 08/655,176

[22] Filed: May 30, 1996

[51] Int. Cl.[7] E04D 11/02; G01K 13/00

[52] U.S. Cl. 52/409; 52/105; 116/205; 116/207; 116/216; 374/106; 374/162; 374/141

[58] Field of Search 52/408, 409, 411, 52/105, 745.06, 746.1, 746.11; 116/205, 207, 216, 217; 374/106, 141, 160, 161, 162

[56] References Cited

U.S. PATENT DOCUMENTS

3,002,385	10/1961	Wahl et al. .	
3,175,401	3/1965	Geldmacher .	
3,430,491	3/1969	Gignilliat, III .	
3,521,489	7/1970	Finkelstein et al. .	
3,677,088	7/1972	Lang .	
3,765,243	10/1973	Pickett et al. .	
3,859,856	1/1975	Keele et al. .	
4,362,645	12/1982	Ilof et al.	116/217 X
4,459,046	7/1984	Spirg .	
4,565,732	1/1986	Stamper et al.	52/408 X
4,601,588	7/1986	Takahara et al. .	
4,743,557	5/1988	Tiru et al. .	
4,753,188	6/1988	Schmoegner .	
4,767,653	8/1988	Renstrom	52/411 X
4,827,686	5/1989	Stamper et al.	52/408
4,829,539	5/1989	Angus et al. .	
4,860,514	8/1989	Kelly	52/746.11 X
5,008,136	4/1991	Chamberlain .	
5,152,611	10/1992	Pieper et al. .	

Primary Examiner—Carl D. Friedman
Assistant Examiner—Kevin D. Wilkens
Attorney, Agent, or Firm—Robert F. Rywalski; David D. Murray

[57] ABSTRACT

A roofing membrane heat seal indicator provides a positive, visually perceptible indication that a joint or seam has been raised to a sufficiently high temperature to achieve a proper seal. The heat seal indicator is applied adjacent and parallel to an edge of a roofing membrane which will be arranged on a roof to form the upper (exposed) surface of an overlapping membrane seam. As the adjacent surfaces of the overlapped membranes are heated, heat passes through the membrane to the heat seal indicator. The heat seal indicator may be a temperature sensitive ink pigmented with material that changes color upon being subjected to a temperature indicating that the membrane surface has been subjected to a sufficiently high temperature to achieve an appropriate seal. Alternatively, the indicator may be an adhered layer of a ground or flaked polymer, such as polyethylene, which is initially opaque but melts to become translucent, thereby indicating obtainment of a proper sealing temperature. This indicator may be combined with a white or colored strip which enhances the change in the polyethylene. Another alternative comprehends the combination of a group indicator and molten polyethylene to form a pigmented polyethylene which is cooled, flaked, and adhered to roofing membranes. Another alternative is an embossed ridge or raised letters which may be covered with a thin, temperature sensitive polyvinyl chloride film or coating.

29 Claims, 4 Drawing Sheets

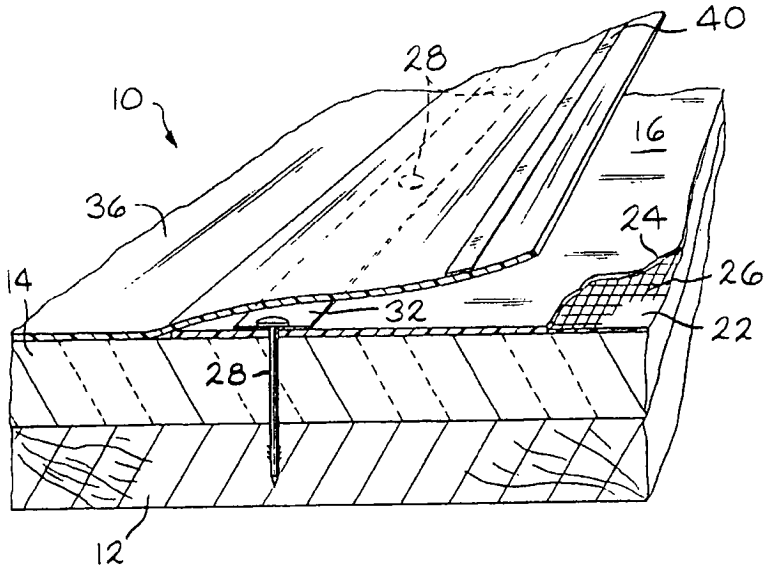

ALP00563

US006004645A

United States Patent [19]

Hubbard

[11] **Patent Number: 6,004,645**

[45] **Date of Patent: *Dec. 21, 1999**

[54] **SINGLE-PLY MEMBRANE ROOFING SYSTEM**

[75] Inventor: **Michael J. Hubbard**, Holland, Ohio

[73] Assignee: **Omnova Solutions Inc.**, Fairlawn, Ohio

[*] Notice: This patent issued on a continued prosecution application filed under 37 CFR 1.53(d), and is subject to the twenty year patent term provisions of 35 U.S.C. 154(a)(2).

[21] Appl. No.: **08/706,027**

[22] Filed: **Aug. 30, 1996**

[51] **Int. Cl.**[6] **B32B 3/06**

[52] **U.S. Cl.** **428/57**; 52/408; 52/409; 52/410; 428/58; 428/119, 428/120, 428/192, 428/194

[58] **Field of Search** 428/57, 58, 192, 428/194, 119, 120; 52/408, 409, 410

[56] **References Cited**

U.S. PATENT DOCUMENTS

Re. 32,710	7/1988	Seaman	52/518
2,115,368	4/1938	Lustberg	428/57
2,624,886	1/1953	Herman	428/57
3,346,441	10/1967	Bird	428/57
4,282,050	8/1981	Thiis-Evensen	156/71
4,410,575	10/1983	Obayashi	428/57
4,445,306	5/1984	Schauffele	52/410
4,718,211	1/1988	Russell et al.	52/409
4,726,164	2/1988	Reinwall et al.	52/410
4,767,658	8/1988	Lorenz	428/192
4,787,188	11/1988	Murphy	52/410
4,787,775	11/1988	Hammer	405/150
4,860,514	8/1989	Kelly	52/410
4,892,768	1/1990	Cheung	428/57
4,945,699	8/1990	Murphy	52/410
4,977,720	12/1990	Knipers	52/408
5,006,385	4/1991	Cheung	428/57
5,018,329	5/1991	Hasan et al.	52/410
5,035,028	7/1991	Lemke	24/336

OTHER PUBLICATIONS

Building Materials, 1994 FMRC Approval Guide, 18–89.

Primary Examiner—Nasser Ahmand
Attorney, Agent, or Firm—Robert F. Rywalski; Larry R. Meenan

[57] **ABSTRACT**

A method of applying a roof membrane assembly to a roof deck. The method includes the steps of providing a roof membrane assembly including a first roof membrane and a second roof membrane. The first roof membrane has at least one longitudinally extending edge and the second roof membrane overlaps the first roof membrane and is bonded along at least one longitudinally extending edge of the first roof membrane to define a membrane flap having a longitudinally extending edge. The roof membrane assembly is then positioned upon the roof deck and at least one roof membrane fastening device is positioned over the first roof membrane and beneath the longitudinally extending membrane flap and secured through the first roof membrane and into the roof deck. The longitudinally extending edge of the membrane flap is then bonded to the first roof membrane.

18 Claims, 2 Drawing Sheets

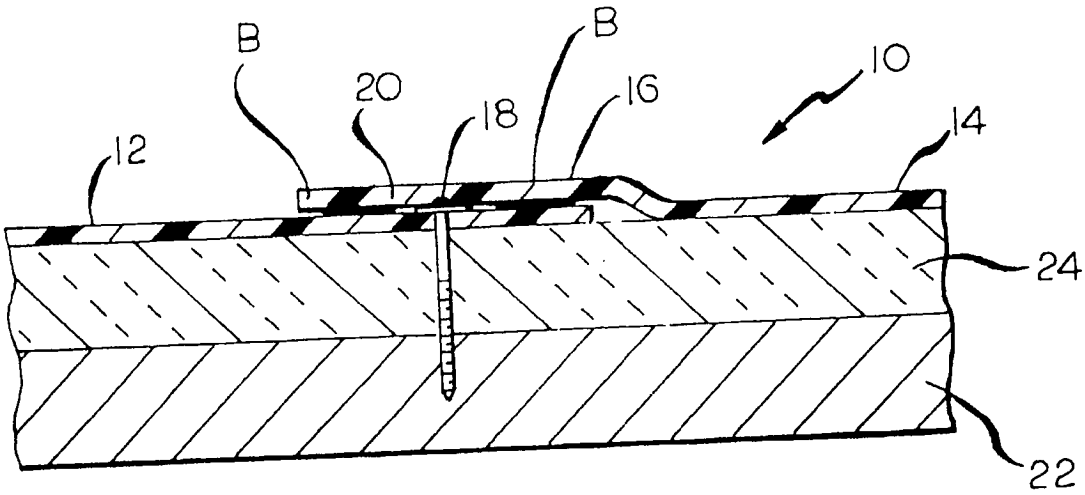

ALP00564

US005935357A

United States Patent [19]

Hubbard et al.

[11] Patent Number: 5,935,357

[45] Date of Patent: Aug. 10, 1999

[54] DUAL-WELD ROOF MEMBRANE WELDING APPARATUS AND METHOD OF USING SAME

[75] Inventors: Michael J. Hubbard, Holland; John Jordon, Waterville, both of Ohio

[73] Assignee: GenCorp Inc., Fairlawn, Ohio

[21] Appl. No.: 08/803,356

[22] Filed: Feb. 20, 1997

[51] Int. Cl.[6] B32B 31/00

[52] U.S. Cl. 156/82; 156/497; 156/499; 156/544; 156/574

[58] Field of Search 156/82, 497, 499, 156/544, 545, 574

[56] References Cited

U.S. PATENT DOCUMENTS

4,146,419	3/1979	Neidhart	156/391
4,204,904	5/1980	Tabor	156/497
4,440,588	4/1984	Stevenson et al.	156/157
4,725,328	2/1988	Arnold	156/380.9
4,744,855	5/1988	Ellenberger et al.	156/499
4,834,828	5/1989	Murphy	156/359
4,855,004	8/1989	Chitjian	156/359
4,872,941	10/1989	Lippman et al.	156/497
4,913,772	4/1990	Taylor et al.	156/499
5,234,533	8/1993	Neal	156/497
5,353,782	10/1994	Morris	156/497 X
5,378,302	1/1995	Meister	156/497
5,543,003	8/1996	Regnier	156/82
5,552,014	9/1996	Morris	156/577

OTHER PUBLICATIONS

"Leister Welding Tools for Thermoplastics", Oct. 3, 1994.

Primary Examiner—James Engel

Attorney, Agent, or Firm—Robert F. Rywalski; Larry R. Meenan

[57] ABSTRACT

A dual-weld heat welding apparatus capable of simultaneously welding a first membrane and an overlapping second membrane on opposite sides of a roof membrane fastening apparatus fastened through the first membrane and located under the overlapping second membrane The heat welding apparatus includes a movably supported chassis, a hot air welder attached to the chassis including a nozzle having an outlet including at least one opening for simultaneously applying a weld on opposite sides of the roof membrane fastener to weld the overlapping second membrane and the first membrane, and at least one weld wheel rotatably attached to the chassis and located rearward of the nozzle relative to the direction of movement of the apparatus and capable of simultaneously applying pressure to the weld on each side of the roof membrane fastener.

48 Claims, 9 Drawing Sheets

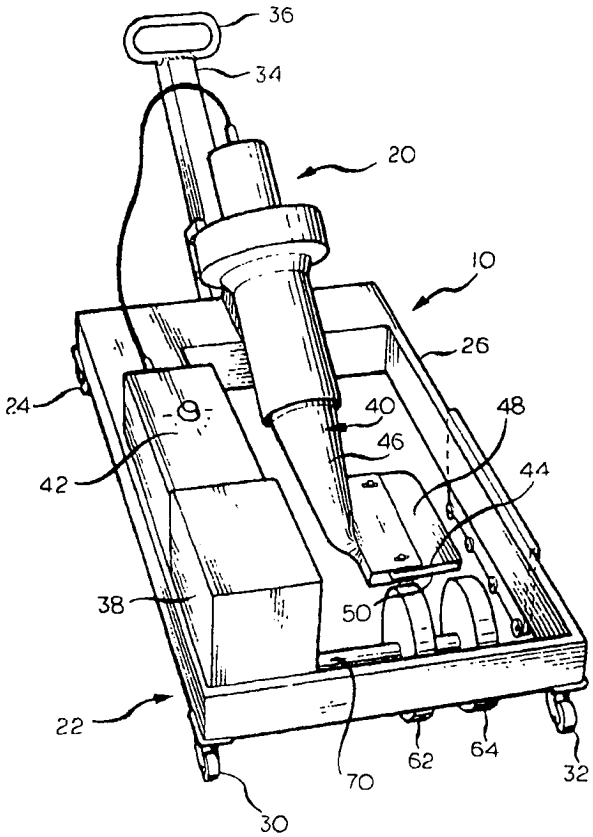

ALP00565

US005772816A

United States Patent [19]

Hubbard

[11] Patent Number: 5,772,816

[45] Date of Patent: Jun. 30, 1998

[54] REINFORCED TAPE STRIP FOR PERIMETER SECUREMENT OF A MEMBRANE ROOF AND METHOD FOR ATTACHING

[75] Inventor: Michael J. Hubbard, Holland, Ohio

[73] Assignee: GenCorp Inc., Fairlawn, Ohio

[21] Appl. No.: 449,459

[22] Filed: May 24, 1995

Related U.S. Application Data

[63] Continuation of Ser. No. 353,735, Dec. 12, 1994, Pat. No. 5,593,748, which is a continuation of Ser. No. 193,320, Feb. 9, 1994, abandoned.

[51] Int. Cl.[6] B32B 7/08; B32B 31/00

[52] U.S. Cl. 156/71; 156/92

[58] Field of Search 156/71, 92; 428/40, 428/354, 355; 52/58, 410, 746

[56] References Cited

U.S. PATENT DOCUMENTS

4,519,175	5/1985	Resan	52/713
4,588,637	5/1986	Chiu	428/355
4,649,686	3/1987	Backenstow et al.	52/509
4,712,348	12/1987	Triplett et al.	52/408
4,767,653	8/1988	Renstrom	428/40
4,885,887	12/1989	Simmons et al.	52/410
4,932,171	6/1990	Beattie	52/58
4,934,117	6/1990	Barksdale	52/219
4,965,119	10/1990	Sancaktar	428/192
4,996,812	3/1991	Venable	52/408
5,198,300	3/1993	Matthews et al.	428/354
5,204,148	4/1993	Alexander et al.	428/40
5,286,798	2/1994	Davis et al.	525/211

Primary Examiner—Jenna Davis

Attorney, Agent, or Firm—Robert F. Rywalski; Larry R. Meenan

[57] ABSTRACT

A reinforced tape strip for securing a membrane roof to a roof deck or a parapet wall of a roof deck. The reinforced tape strip includes a layer of a single ply reinforcement material, at least one adhesive layer of a uniform thickness bonded to the single ply reinforcement material, and a protective layer covering the adhesive layer.

4 Claims, 1 Drawing Sheet

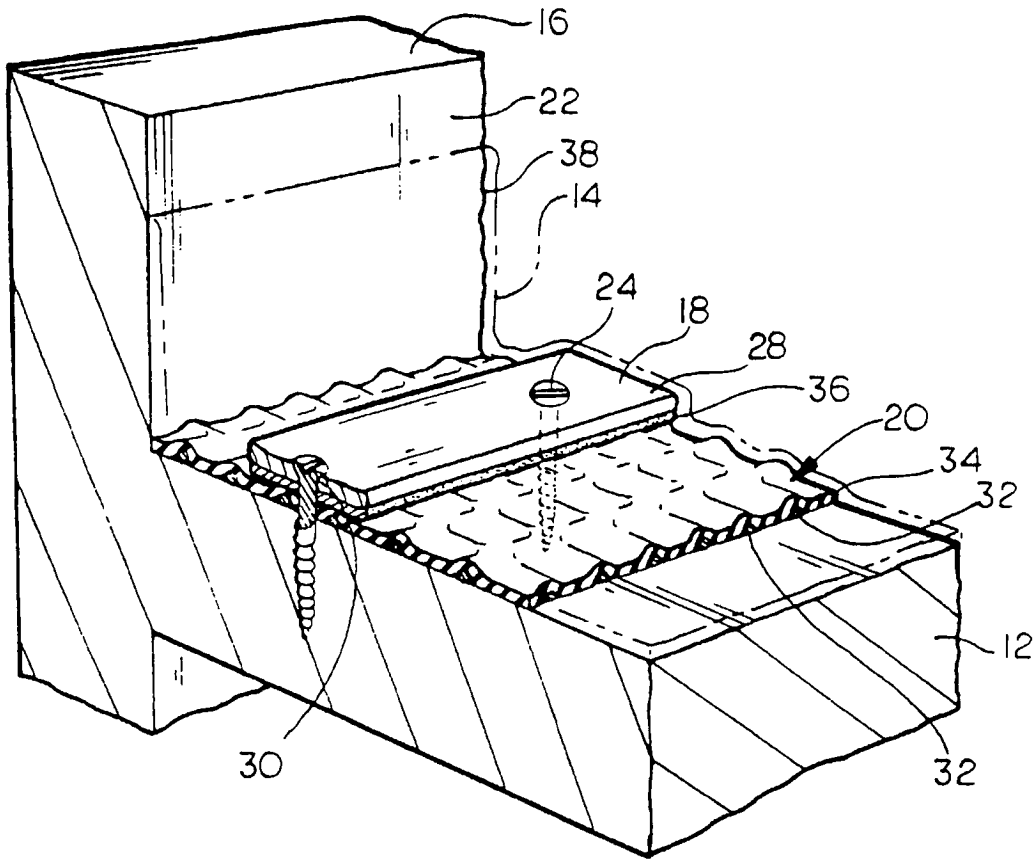

ALP00566

US005593748A

United States Patent [19]

Hubbard

[11] Patent Number: 5,593,748

[45] Date of Patent: Jan. 14, 1997

[54] REINFORCED TAPE STRIP FOR PERIMETER SECUREMENT OF A MEMBRANE ROOF AND METHOD OF ATTACHING

[75] Inventor: Michael J. Hubbard, Holland, Ohio

[73] Assignee: GenCorp Inc., Fairlawn, Ohio

[21] Appl. No.: 353,735

[22] Filed: Dec. 12, 1994

Related U.S. Application Data

[63] Continuation of Ser. No. 193,320, Feb. 9, 1994, abandoned.

[51] Int. Cl.[6] C09J 7/02

[52] U.S. Cl. 428/41.3; 428/261; 428/343; 428/354

[58] Field of Search 428/40, 354, 355, 428/147, 57, 58, 517, 521, 261, 343; 52/58, 410, 746

[56] References Cited

U.S. PATENT DOCUMENTS

4,519,175	5/1985	Resan	52/713
4,588,637	5/1986	Chiu	428/521 X
4,649,686	3/1987	Backenstow et al.	52/509
4,712,348	12/1987	Triplett et al.	52/408
4,767,653	8/1988	Renstrom	428/192 X
4,885,887	12/1989	Simmons et al.	52/410
4,932,171	6/1990	Beattie	52/58
4,934,117	6/1990	Barksdale	52/219
4,965,119	10/1990	Sancaktar	428/354 X
4,996,812	3/1991	Venable	428/148 X
5,198,300	3/1993	Matthews et al.	428/57 X
5,204,148	4/1993	Alexander et al.	428/40
5,286,798	2/1994	Davis et al.	428/290 X

Primary Examiner—Jenna Davis

Attorney, Agent, or Firm—Robert F. Rywalski; Larry R. Meenan

[57] ABSTRACT

A reinforced tape strip for securing a membrane roof to a roof deck or a parapet wall of a roof deck. The reinforced tape strip includes a layer of a single ply reinforcement material, at least one adhesive layer of a uniform thickness bonded to the single ply reinforcement material, and a protective layer covering the adhesive layer.

16 Claims, 1 Drawing Sheet

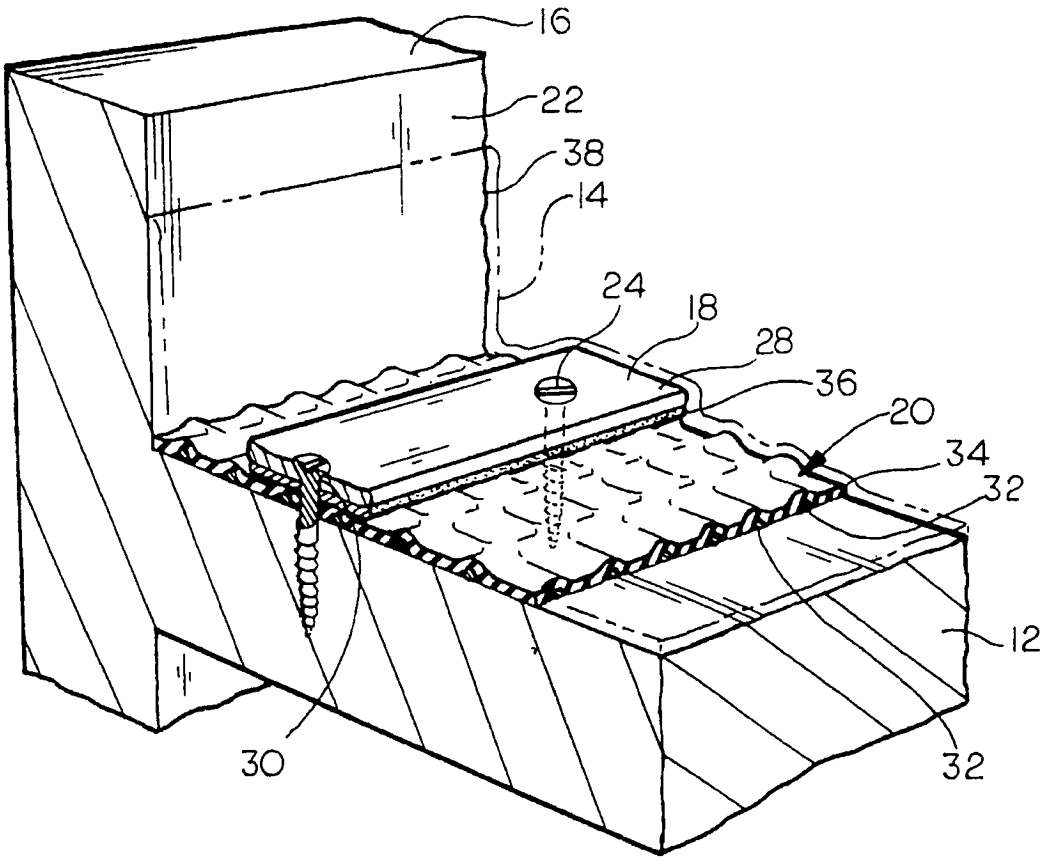

ALP00567

US005242727A

United States Patent [19]

Briddell et al.

[11] Patent Number: 5,242,727

[45] Date of Patent: Sep. 7, 1993

[54] ADHESIVE COMPOSITION AND METHOD FOR PROVIDING WATER-TIGHT JOINTS IN SINGLE-PLY ROOFING MEMBRANES

[75] Inventors: Brian J. Briddell; Michael J. Hubbard, both of Jackson, Mich.

[73] Assignee: Adco Products, Inc., Michigan Center, Mich.

[21] Appl. No.: 792,458

[22] Filed: Nov. 15, 1991

Related U.S. Application Data

[63] Continuation-in-part of Ser. No. 637,628, Jan. 4, 1991, abandoned.

[51] Int. Cl.[5] C08L 23/16; C08L 23/22; C08L 23/28; C08L 61/06

[52] U.S. Cl. 428/42; 428/355; 525/145; 525/154; 525/87; 525/236; 525/235; 525/237; 525/240

[58] Field of Search 525/237, 235, 240, 154, 525/236, 87, 145; 428/42, 355

[56] References Cited

U.S. PATENT DOCUMENTS

4,588,637	5/1986	Chiu	428/355
4,601,935	7/1986	Metcalf et al.	428/57
4,603,164	7/1986	Chmiel et al.	524/432
4,671,996	6/1987	Cantor	428/343
4,737,528	4/1988	Musch et al.	523/335
4,742,119	5/1988	Close	525/211
4,855,172	8/1989	Chiu	428/57
4,881,996	11/1989	Nussbaum et al.	156/157

Primary Examiner—James J. Seidleck
Assistant Examiner—W. R. H. Clark
Attorney, Agent, or Firm—Killworth, Gottman, Hagan & Schaeff

[57] ABSTRACT

A cured adhesive tape composition for adhering together roofing materials such as synthetic EPDM rubber and which provides long term water tightness is provided. The adhesive composition includes substantially equal amounts by weight of a) a rubbery polymer comprising a blend of an ethylene-propylenediene terpolymer, a halogenated butyl rubber or a halogenated copolymer of p-methylstyrene and isobutylene, and polyisobutylene b) a compatible tackifier, and c) an accelerator/cure package for the rubbery polymer. The cured composition exhibits a peel strength of at least 715 grams/cm at room temperature, at least 300 grams/cm at 70° C., and supports a static load of at least 300 grams at 70° C.

12 Claims, No Drawings

ALP00568

US005234987A

United States Patent [19]

Hubbard et al.

[11] Patent Number: 5,234,987

[45] Date of Patent: Aug. 10, 1993

[54] SOLVENT-BASED ADHESIVE COMPOSITION FOR ROOFING MEMBRANES

[75] Inventors: Michael J. Hubbard; Brian J. Briddell; Dennis K. Fisher, all of Jackson, Mich.

[73] Assignee: Adco Products, Inc., Michigan Center, Mich.

[21] Appl. No.: 908,408

[22] Filed: Jul. 6, 1992

[51] Int. Cl.[5] C08K 5/36; C08F 297/04

[52] U.S. Cl. 524/505; 524/271; 524/273

[58] Field of Search 524/271, 273, 505

[56] References Cited

U.S. PATENT DOCUMENTS

2,163,609	6/1939	MacDonald	524/273
2,767,152	10/1956	Bierman et al.	524/271
2,884,400	4/1959	Moore	524/271
2,947,710	8/1960	Frantz	524/271
4,588,637	5/1986	Chiu	525/331.9
4,603,164	7/1986	Chmiel et al.	524/507
4,640,730	2/1987	Streets et al.	524/504
4,742,119	5/1988	Close	524/526
4,855,172	8/1989	Chiu	428/157
4,881,996	11/1989	Nussbaum et al.	524/505
5,095,068	3/1992	Chiu	524/525

FOREIGN PATENT DOCUMENTS

0330089	8/1989	European Pat. Off.	524/271

OTHER PUBLICATIONS

Brochure-Kraton® Thermoplastic Rubber, Shell Chemical Company. Typical Properties 1986.

Brochure/Technical Information-Exxon® Bromo XP-50, New Isobutylene-based elastomers for outstanding ozone, UV and heat resistance, Exxon Chemical, Sep. 1991.

Primary Examiner—Paul R. Michl

Assistant Examiner—Olga Asinovsky

Attorney, Agent, or Firm—Killworth, Gottman, Hagan & Schaeff

[57] ABSTRACT

A solvent-based adhesive composition for adhering together roofing materials, such as synthetic EPDM rubber sheets, which provides long term storage stability is provided. The adhesive composition includes a halogenated copolymer of isobutylene and p-methyl styrene, a thermoplastic rubber comprising a styrene-ethylene-butylene-styrene block copolymer, an end-block resin for the thermoplastic rubber, a tackifier, an accelerator/cure package, and a solvent. The cured composition exhibits a peel strength of at least 3.0 pounds per lineal inch at room temperature, at least 3.0 pounds per lineal inch at 212° F., supports a static load of at least 0.67 pounds at 158° F. for a minimum of 24 hours, and exhibits a viscosity increase of less than 1500 centipoise after aging at 130° F. for six weeks.

24 Claims, No Drawings

ALP00569

TECHNICAL INFORMATION SHEET

FSP-707
10/21/2008

Firestone
SPECIALTY PRODUCTS

EPDM Pipe Flashing

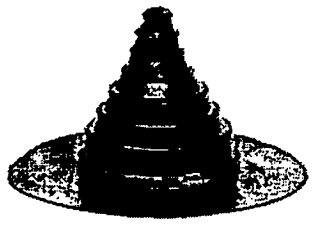

Firestone Item Number:
W563581033: Universal

DESCRIPTION:
Firestone EPDM Pipe Flashings are specifically designed to be used in approved Firestone membrane applications for flashing of round penetrations. Firestone Pipe Flashings will fit various penetrations and may be cut to the correct pipe diameter before installation.

METHOD OF APPLICATION:
Penetration must be clean of prior flashing and foreign materials. Measure the outside diameter of penetration to be flashed. Cut along the top edge of the ring corresponding to that size. Install the Pipe using SA1065 Splice Adhesive to attach the flange to the membrane. Install the clamping ring and lap sealant to the top of the flashing and Seam Edge Treatment to the seam edge per current Firestone Specialty Products specifications and details.

Clean the membrane to receive the EPDM Pipe Flashing using clean cotton cloths and Firestone SW-100 or QuickPrime Plus to remove all dusting agent, dirt and other contaminants that will affect the finished splice strength. Allow to flash-off. Brush apply SA-1065 over the RubberGard membrane and to the underside of the pipe flashing flange. Allow to flash off. Perform the "touch/push test" to verify that the SA-1065 is ready for mating. Install the pipe flashing and roll the flange with a silicone hand roller. Apply Firestone Seam Edge Treatment to the flange edge and install the clamping ring per current Firestone Specialty Products specifications and details.

STORAGE:
Store away from sources of punctures and physical damage.

PRODUCT DATA

Property	Minimum Performance
Molded Pipe Flashing	
Material	Molded EPDM
Color:	Black
Sizes:	Fits 25.4 mm - 174.6 mm (1" - 6.875") O.D.
Clamp:	Stainless Steel - clamps are included
Pipe Flange:	330.2 mm (13.0") O.D.
Thickness:	1.4 mm - 1.9 mm (0.055" - 0.075")

Fits the Pipe Outside Diameters listed below:

SI	Eng
25.4 mm - 34.9 mm	1.00" - 1.375"
41.3 mm - 47.6 mm	1.625" - 1.872"
50.8 mm - 66.7 mm	2.00" - 2.625"
69.8 mm - 92.1 mm	2.75" - 3.625"
102.0 mm - 114.0 mm	4.00" - 4.50"
127.0 mm - 141.0 mm	5.00" - 5.50"
152.4 mm - 174.6 mm	6.00" - 6.875"

Note: For penetrations less than 1.0" in diameter, use Firestone QuickSeam Conduit Flashing.

PACKAGING:
10 Pipe Flashings and Universal SS clamps are packaged per carton and 54 cartons per pallet.

PRECAUTIONARY DATA:
1. Review Material Safety Data Sheet (MSDS) prior to use.
2. Do not install over uneven substrates.

LEED INFORMATION:
Post Consumer Recycled Content: 0%
Post Industrial Recycled Content: 0%
Manufacturing Location: Bensenville, IL

AS HOLDINGS vs. H&C MILCOR
Opposition No. 91182064
Serial No. 76/461,157
Opposers' No. 31

This sheet is meant only to highlight Firestone's products and specifications. Information is subject to change. This sheet is meant only to highlight Firestone's products and specifications. Information is subject to change without notice. Firestone takes responsibility for furnishing quality materials, which meet Firestone's published product specification. As neither Firestone itself nor its representatives practice design, Firestone offers no opinion on and expressly disclaims any responsibility for the soundness of any project on which its products may be applied. If questions arise as to the soundness of a project, or its ability to support a planned installation properly, the Owner should obtain opinions of competent design engineers before proceeding. Firestone accepts no liability for any failure or for resultant damages, and no Firestone Representative is authorized to vary this disclaimer.

Firestone Specialty Products
250 West 96th Street, Indianapolis, Indiana 46260
Specialty Products (800) 428-4442
Internet Address: http://www.firestonesp.com

S723-SPP-???

ALP00570

TECHNICAL INFORMATION SHEET

FSP-506
10/21/2008

Firestone
SPECIALTY PRODUCTS

QuickSeam™ Pipe Flashing

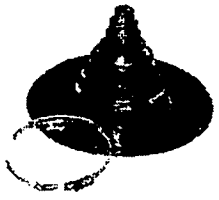

Firestone Item Number:
W563581063: Universal

DESCRIPTION:
Firestone QuickSeam Pipe Flashings are specifically designed to be used in approved Firestone membrane applications for flashing of round penetrations. Each box of pipe flashings contains universal stainless steel worm gear clamps.

METHOD OF APPLICATION:
Penetration must be clean of prior flashing and foreign materials. Cut along the top edge of the ring on the QuickSeam Pipe Flashing corresponding to one size smaller than the pipe you are flashing.

Clean the membrane to receive the QuickSeam Pipe Flashing using QuickPrime Plus™ and a QuickScrubber™ or QuickScrubber Plus™ pad and handle to remove all dusting agent, dirt and other contaminants that will affect the finished bond. Allow to dry according to the touch-push test. Remove the release paper. Install the pipe flashing and roll the flange with a silicone hand roller. Install clamping ring and lap sealant per Firestone Specialty Products specifications and details.

SHELF LIFE:
1. Shelf life of one (1) year can be expected if stored in original unopened container at temperatures between 15.6 - 26.7° C (60 - 80° F).
2. Shelf life will be shortened if exposed to elevated temperatures.
3. Rotate stock to insure stored material will not go beyond the shelf life of one (1) year.

STORAGE:
1. Store in original unopened containers at temperatures between 15.6 - 26.7° C (60 - 80° F) until ready for use.
2. When exposed to lower temperatures, restore to room temperature prior to use.

PRODUCT DATA

Property	Minimum Performance
QuickSeam Tape	
Base:	Rubber Polymer
Color:	Black
Solvents:	None
Solids:	100%
Cured State:	Cured
Thickness:	0.762 mm +/- 0.13 mm (0.030" +/- 0.005")
Molded Pipe Flashing	
Base:	Molded EPDM
Color:	Black
Sizes:	Fits 25.4 mm - 174.6 mm (1.0" - 6.875") O.D.
Clamp:	Stainless Steel - clamps are included
Pipe Flange:	330.2 mm (13.0") O.D.
Thickness:	1.4 mm - 1.9 mm (0.055" - 0.075")

Fits the Pipe Outside Diameters listed below:

SI	Eng
25.4 mm - 34.9 mm	1.0" - 1.375"
41.3 mm - 47.6 mm	1.625" - 1.875"
50.8 mm - 66.7 mm	2.0" - 2.625"
69.8 mm - 92.1 mm	2.75" - 3.625"
102.0 mm - 114.0 mm	4.0" - 4.50"
127.0 mm - 141.0 mm	5.0" - 5.50"
152.4 mm - 174.6 mm	6.0" - 6.875"

STORAGE (Con't):
3. Keep the material out of direct sunlight until ready for application.

PACKAGING:
10 Pipe Flashings and Universal SS clamps are packaged per carton and 54 cartons per pallet.

PRECAUTIONARY DATA:
1. Review Material Safety Data Sheet (MSDS) prior to use.
2. Do not install over uneven substrates.

LEED INFORMATION:
Post Consumer Recycled Content: 0%
Post Industrial Recycled Content: 0%
Manufacturing Location: Bensenville, IL

This sheet is meant only to highlight Firestone's products and specifications. Information is subject to change This sheet is meant only to highlight Firestone's products and specifications. Information is subject to change without notice Firestone takes responsibility for furnishing quality materials, which meet Firestone's published product specification. As neither Firestone itself nor its representatives practice design, Firestone offers no opinion on and expressly disclaims any responsibility for the soundness of any project on which its products may be applied. If questions arise as to the soundness of a project, or its ability to support a planned installation properly, the Owner should obtain opinions of competent design engineers before proceeding Firestone accepts no liability for any failure or for resultant damages, and no Firestone Representative is authorized to vary this disclaimer

Firestone Specialty Products
250 West 96th Street, Indianapolis, Indiana 46260
Specialty Products (800) 428-4442
Internet Address: http://www.firestonesp.com

ALP00571

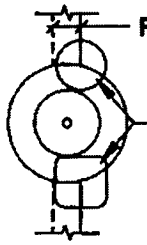

PLAN VIEW
PIPE FLASHING OVER FIELD OR FACTORY SEAM

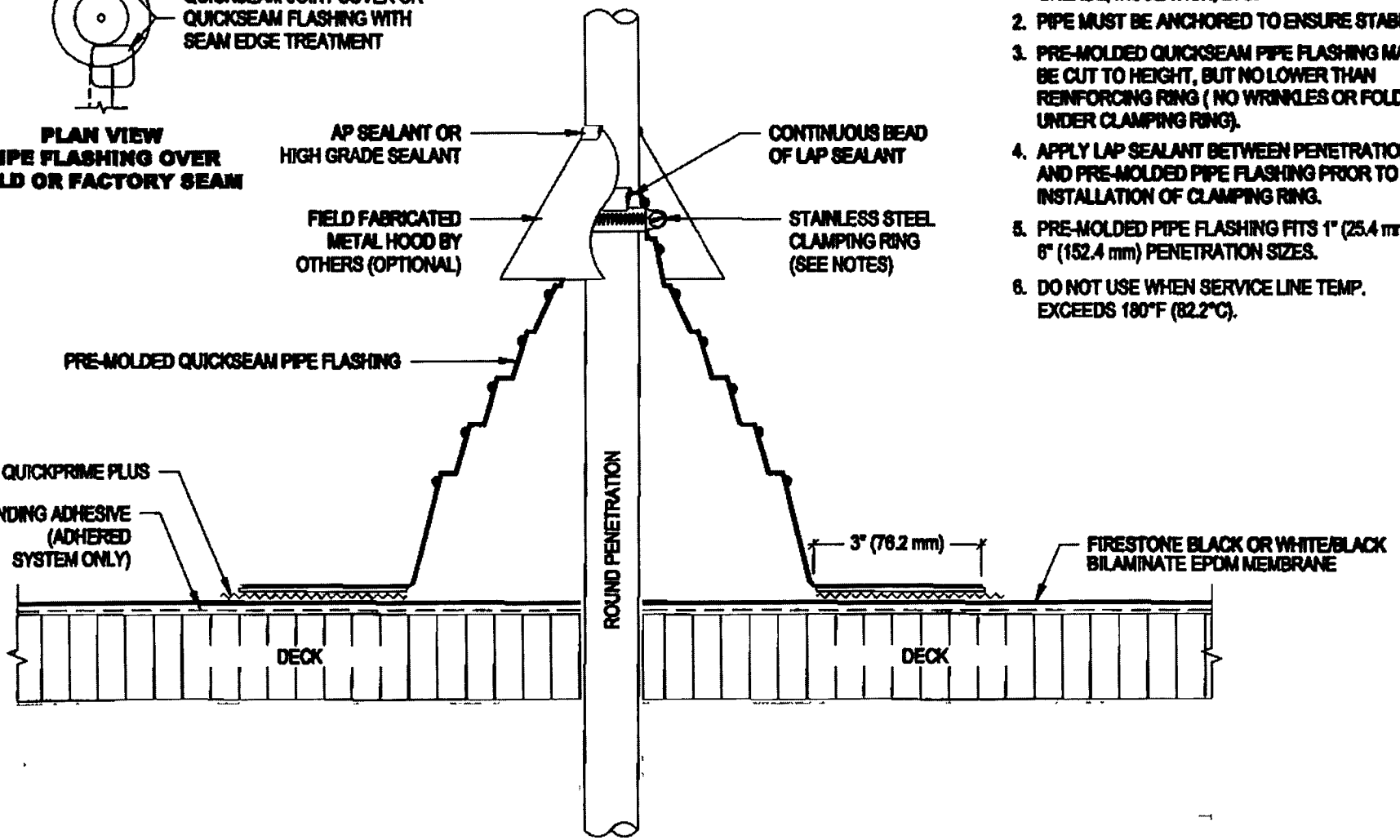

NOTES:

1. REMOVE ALL EXISTING FLASHINGS, LEADS, ETC. PIPE SURFACE MUST BE FREE OF ALL RUST, GREASE, INSULATION, ETC.
2. PIPE MUST BE ANCHORED TO ENSURE STABILITY.
3. PRE-MOLDED QUICKSEAM PIPE FLASHING MAY BE CUT TO HEIGHT, BUT NO LOWER THAN REINFORCING RING (NO WRINKLES OR FOLDS UNDER CLAMPING RING).
4. APPLY LAP SEALANT BETWEEN PENETRATION AND PRE-MOLDED PIPE FLASHING PRIOR TO INSTALLATION OF CLAMPING RING.
5. PRE-MOLDED PIPE FLASHING FITS 1" (25.4 mm) - 6" (152.4 mm) PENETRATION SIZES.
6. DO NOT USE WHEN SERVICE LINE TEMP. EXCEEDS 180°F (82.2°C).

Firestone SPECIALTY PRODUCTS	PENETRATION WITH QUICKSEAM PIPE FLASHING	ISSUE / REVISION DATE: 6/1/2008	DETAIL NO. MM-11
	MRS EPDM MEMBRANE — ACCEPTABLE SYSTEMS: MODULAR SYSTEMS	NOT TO SCALE	

ALP00572

TECHNICAL INFORMATION SHEET

FSP-528
10/21/2008

Firestone
SPECIALTY PRODUCTS

UltraPly™ TPO Universal QuickSeam™ Pipe Flashing

Firestone Item Number:
W56TPO3033: Universal

DESCRIPTION:
UltraPly TPO QuickSeam Pipe Boots are specifically designed to be used in roofing applications for flashing of round penetrations. They fit various penetrations and must be cut to correct pipe diameter before installation.

METHOD OF APPLICATION:

Membrane Preparation:
Clean the TPO membrane using UltraPly TPO QuickPrime™ and a QuickScrubber™ or QuickScrubber Plus™ pad and handle to remove all dust, dirt and other contaminants that will affect the finished bond. Allow to dry according to the touch-push test.

UltraPly TPO Universal QuickSeam Pipe Flashing Installation:
1. Penetration must be clean of prior flashing and foreign materials.
2. Cut along the top edge of the ring on the UltraPly TPO QuickSeam Pipe Flashing corresponding to the size of the pipe.
3. To ensure conformability slightly heat the surface of the TPO membrane using a hot air welder.
4. Install the Pipe Flashing, clamping ring and lap sealant per Firestone Specialty Products specifications and details.
5. Roll flashing to conform into any step-offs.

SHELF LIFE:
1. Shelf life of one (1) year can be expected if stored in original unopened container at temperatures between 15.6 - 26.7° C (60 - 80° F).
2. Shelf life will be shortened if exposed to elevated temperatures.
3. Rotate stock to insure stored material will not go beyond the shelf life of one (1) year.

This sheet is meant only to highlight Firestone's products and specifications. Information is subject to change This sheet is meant only to highlight Firestone's products and specifications. Information is subject to change without notice Firestone takes responsibility for furnishing quality materials, which meet Firestone's published product specification As neither Firestone itself nor its representatives practice design, Firestone offers no opinion on and expressly disclaims any responsibility for the soundness of any project on which its products may be applied If questions arise as to the soundness of a project, or its ability to support a planned installation properly, the Owner should obtain opinions of competent design engineers before proceeding. Firestone accepts no liability for any failure or for resultant damages, and no Firestone Representative is authorized to vary this disclaimer

PRODUCT DATA

Property	Minimum Performance
QuickSeam Tape	
Base:	Rubber Polymer
Color:	White
Solvents:	None
Solids:	100%
Cured State:	Cured
Thickness:	0.762 mm +/- 0.13 mm (0.03" +/- 0.005")
Molded Pipe Flashing	
Material:	Thermoplastic Polyolefin (TPO)
Color:	White
Sizes:	Fits 25.4 mm - 152.4 mm (1.0" - 6.875") O.D.
Clamp:	Stainless Steel - clamps are included
Pipe Flange:	330.2 mm (13.0") O.D.
Thickness:	1.4 mm - 1.9 mm (0.055" - 0.075")

Fits the Pipe Outside Diameters listed below:

SI	Eng	SI	Eng
25.4 - 34.9 mm	1.0" - 1.375"	102.0 - 114.0 mm	4.0 - 4.5"
41.3 - 47.6 mm	1.625" - 1.875"	127.0 - 141.0 mm	5.0 - 5.563"
50.8 - 66.7 mm	2.0" - 2.625"	152.4 - 174.6 mm	6.0 - 6.875"
69.8 - 92.1 mm	2.75" - 3.625"		

Note: For penetrations less than 25.4 mm (1.0") in diameter, use Firestone UltraPly Small Pipe Flashing

STORAGE:
1. Store in original unopened containers at temperatures between 15.6 - 26.7° C (60 - 80° F) until ready for use.
2. When exposed to lower temperatures, restore to room temperature prior to use.
3. Keep the material out of direct sunlight until ready for application.

PACKAGING:
10 Pipe Flashings and Universal SS clamps are packaged per carton and 54 cartons per pallet.

PRECAUTIONARY DATA:
1. Review Material Safety Data Sheet (MSDS) prior to use.
2. Do not install over uneven substrates.

LEED INFORMATION:
Post Consumer Recycled Content: 0%
Post Industrial Recycled Content: 0%
Manufacturing Location: Bensenville, IL

Firestone Specialty Products
250 West 96th Street, Indianapolis, Indiana 46260
Specialty Products (800) 428-4442
Internet Address: http://www.firestonesp.com

S723-SPP-???
ALP00573

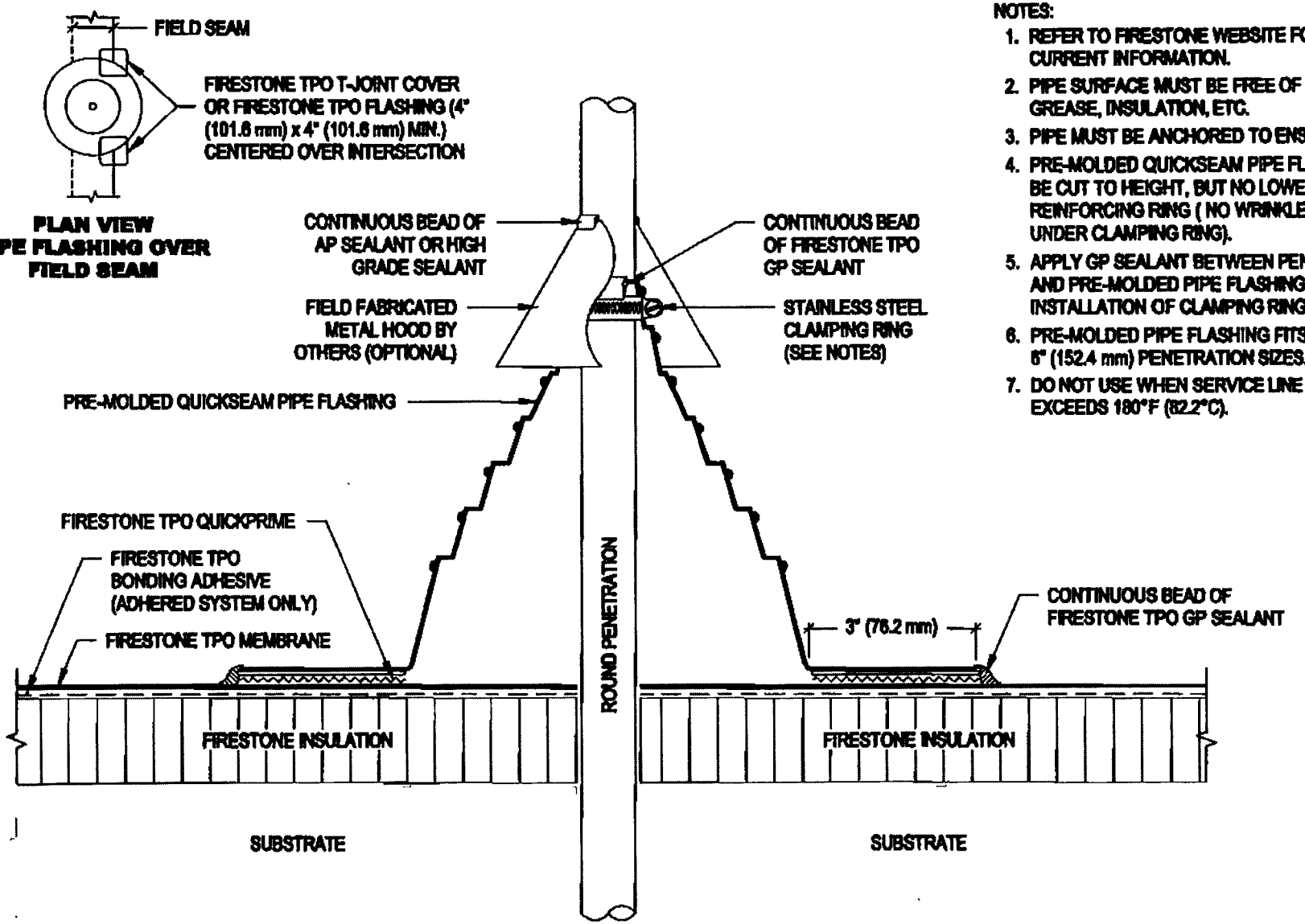

NOTES:

1. REFER TO FIRESTONE WEBSITE FOR MOST CURRENT INFORMATION.
2. PIPE SURFACE MUST BE FREE OF ALL RUST, GREASE, INSULATION, ETC.
3. PIPE MUST BE ANCHORED TO ENSURE STABILITY.
4. PRE-MOLDED QUICKSEAM PIPE FLASHING MAY BE CUT TO HEIGHT, BUT NO LOWER THAN REINFORCING RING (NO WRINKLES OR FOLDS UNDER CLAMPING RING).
5. APPLY GP SEALANT BETWEEN PENETRATION AND PRE-MOLDED PIPE FLASHING PRIOR TO INSTALLATION OF CLAMPING RING.
6. PRE-MOLDED PIPE FLASHING FITS 1" (25.4 mm) - 6" (152.4 mm) PENETRATION SIZES.
7. DO NOT USE WHEN SERVICE LINE TEMP. EXCEEDS 180°F (82.2°C).

Firestone SPECIALTY PRODUCTS	PENETRATION WITH QUICKSEAM PIPE FLASHING	ISSUE / REVISION DATE: 6/01/2008	DETAIL NO.
	MRS TPO MEMBRANE — ACCEPTABLE SYSTEMS: MODULAR SYSTEMS	NOT TO SCALE	MT-12

ALP00574

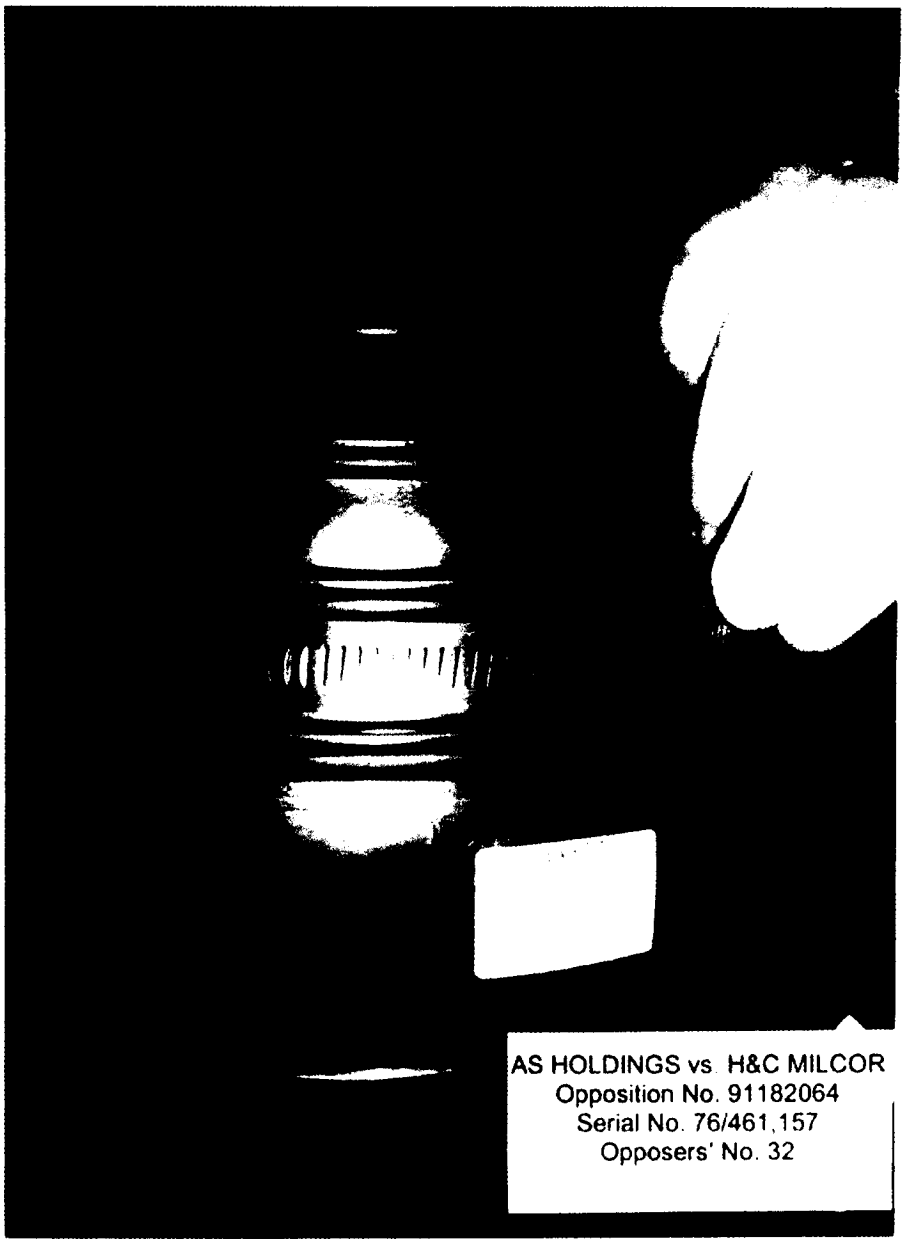
AS HOLDINGS vs. H&C MILCOR
Opposition No. 91182064
Serial No. 76/461,157
Opposers' No. 32

AS HOLDINGS vs. H&C MILCOR
Opposition No. 91182064
Serial No. 76/461,157
Opposers' No. 33

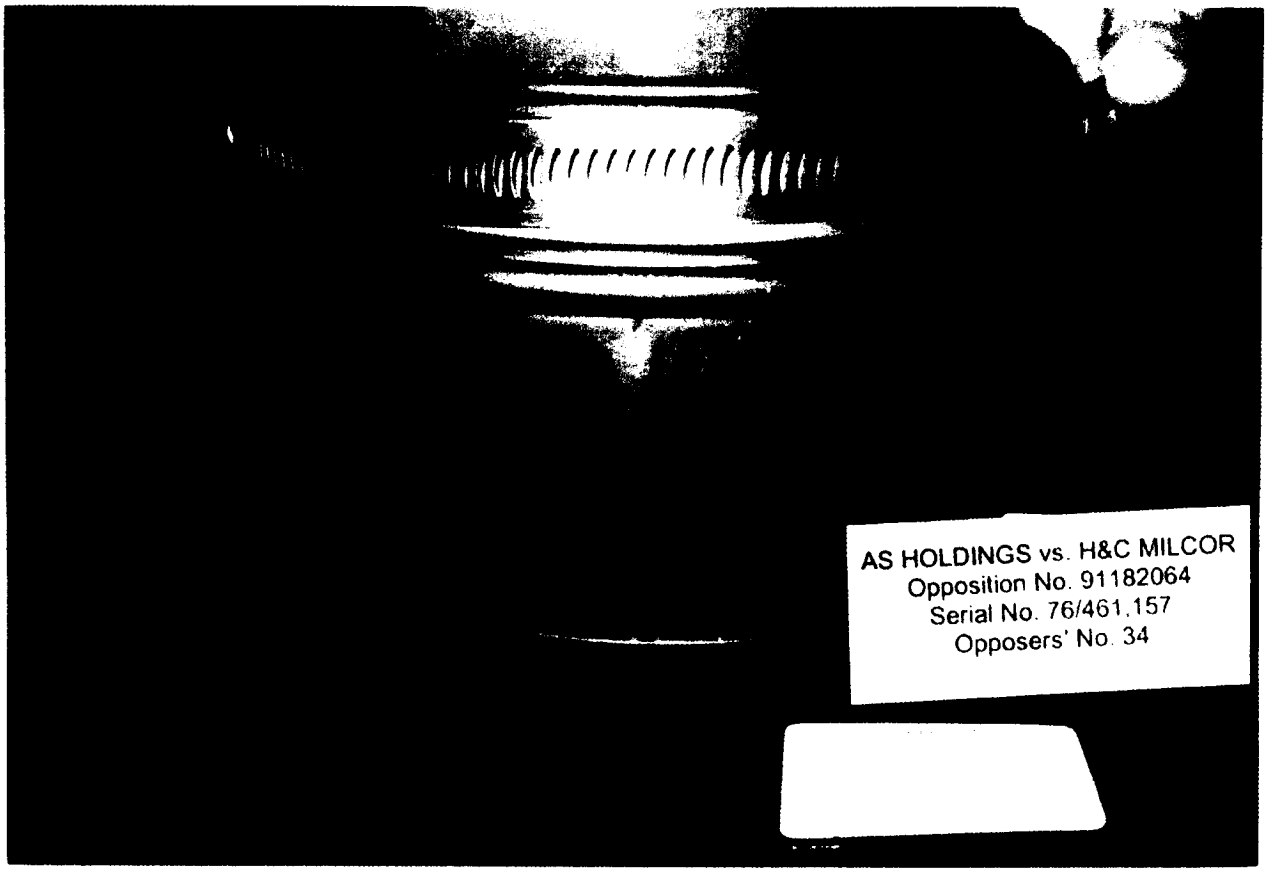
AS HOLDINGS vs. H&C MILCOR
Opposition No. 91182064
Serial No. 76/461,157
Opposers' No. 34

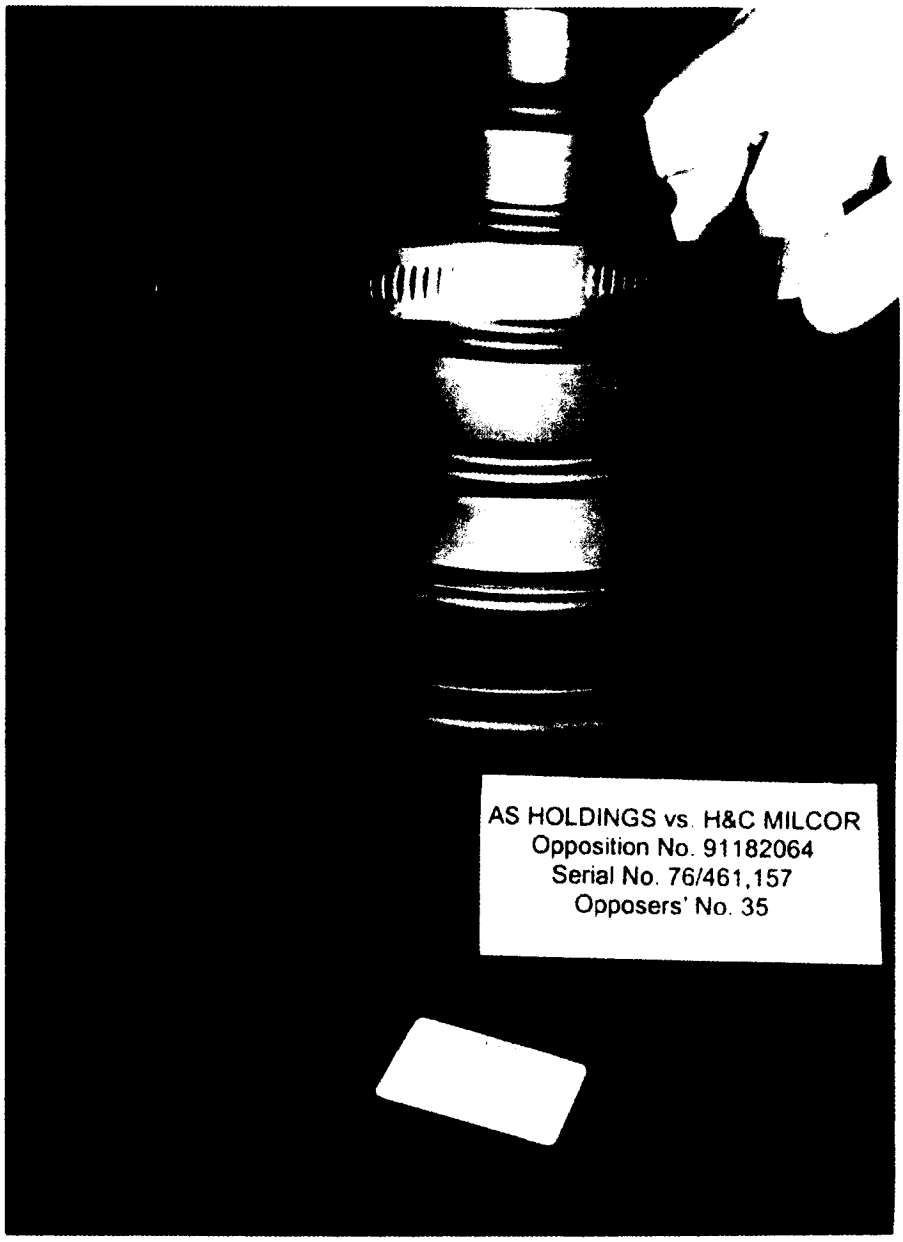
AS HOLDINGS vs. H&C MILCOR
Opposition No. 91182064
Serial No. 76/461,157
Opposers' No. 35

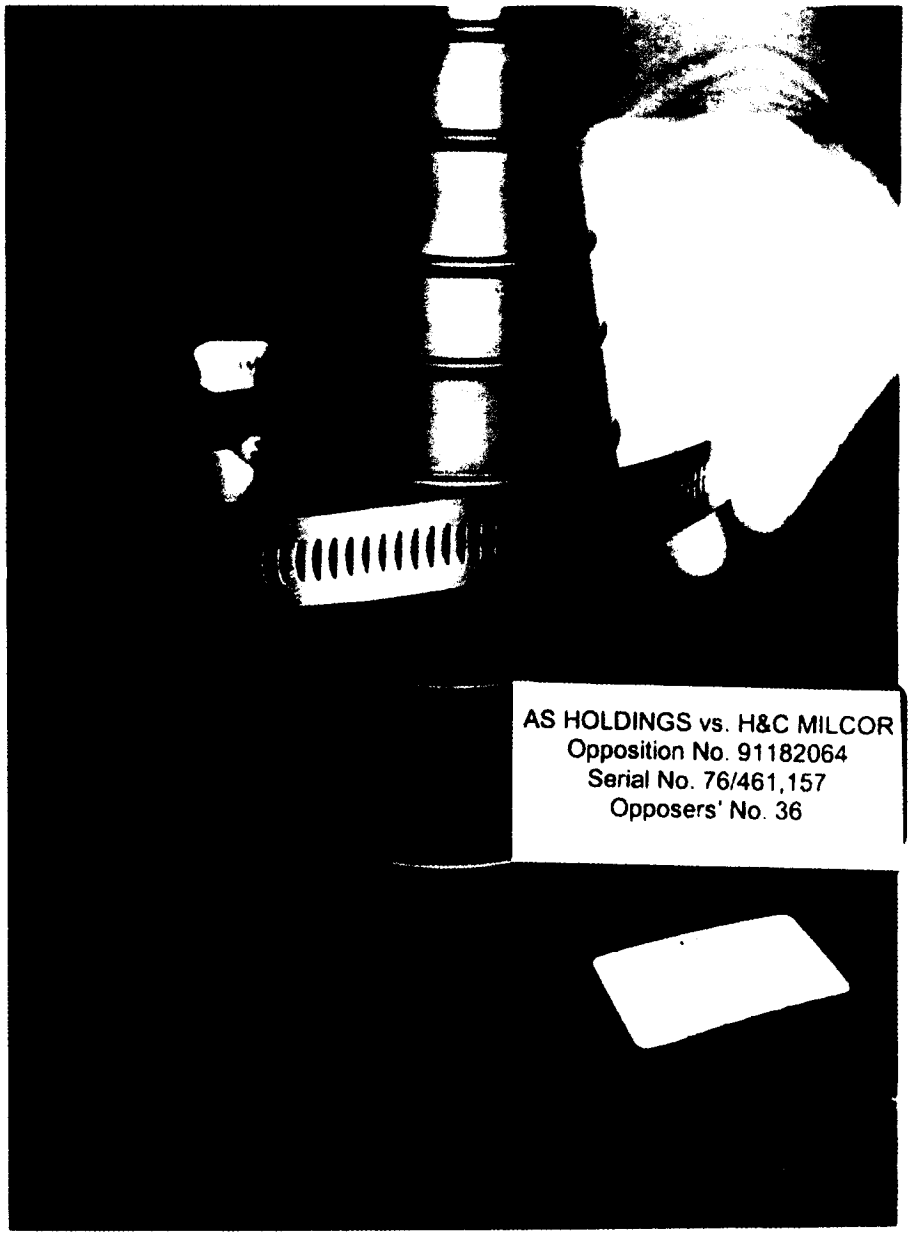
AS HOLDINGS vs. H&C MILCOR
Opposition No. 91182064
Serial No. 76/461,157
Opposers' No. 36

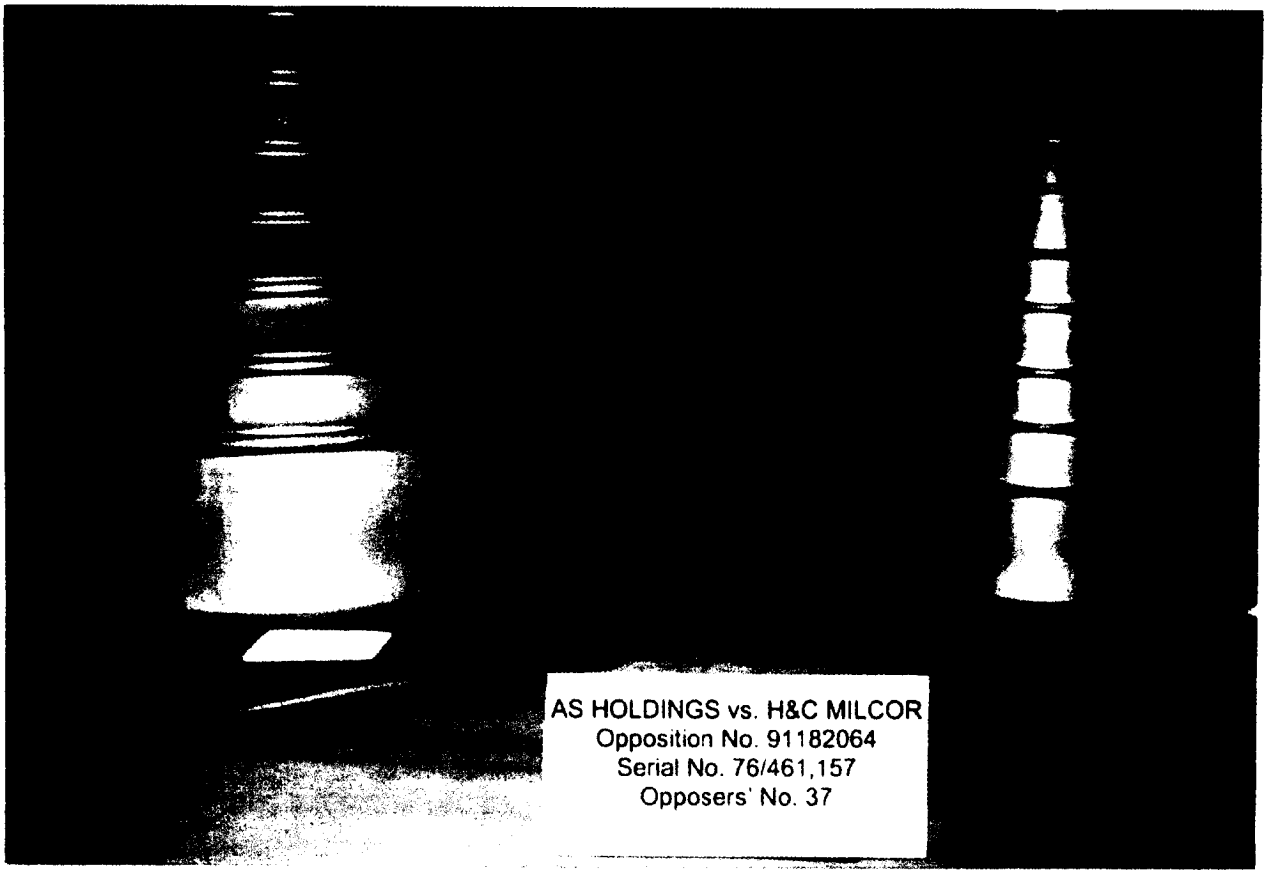
AS HOLDINGS vs. H&C MILCOR
Opposition No. 91182064
Serial No. 76/461,157
Opposers' No. 37

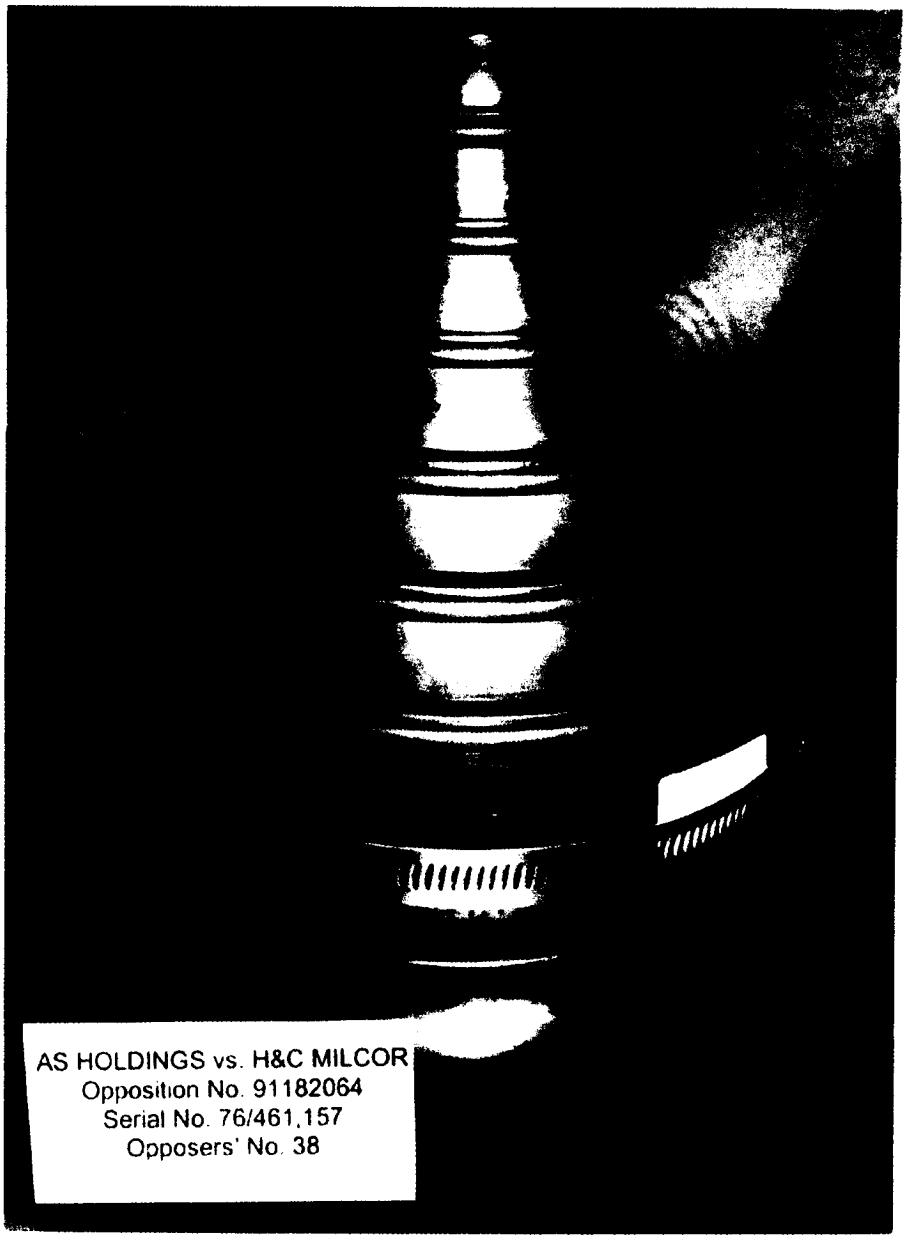
AS HOLDINGS vs. H&C MILCOR
Opposition No. 91182064
Serial No. 76/461,157
Opposers' No. 38

100308

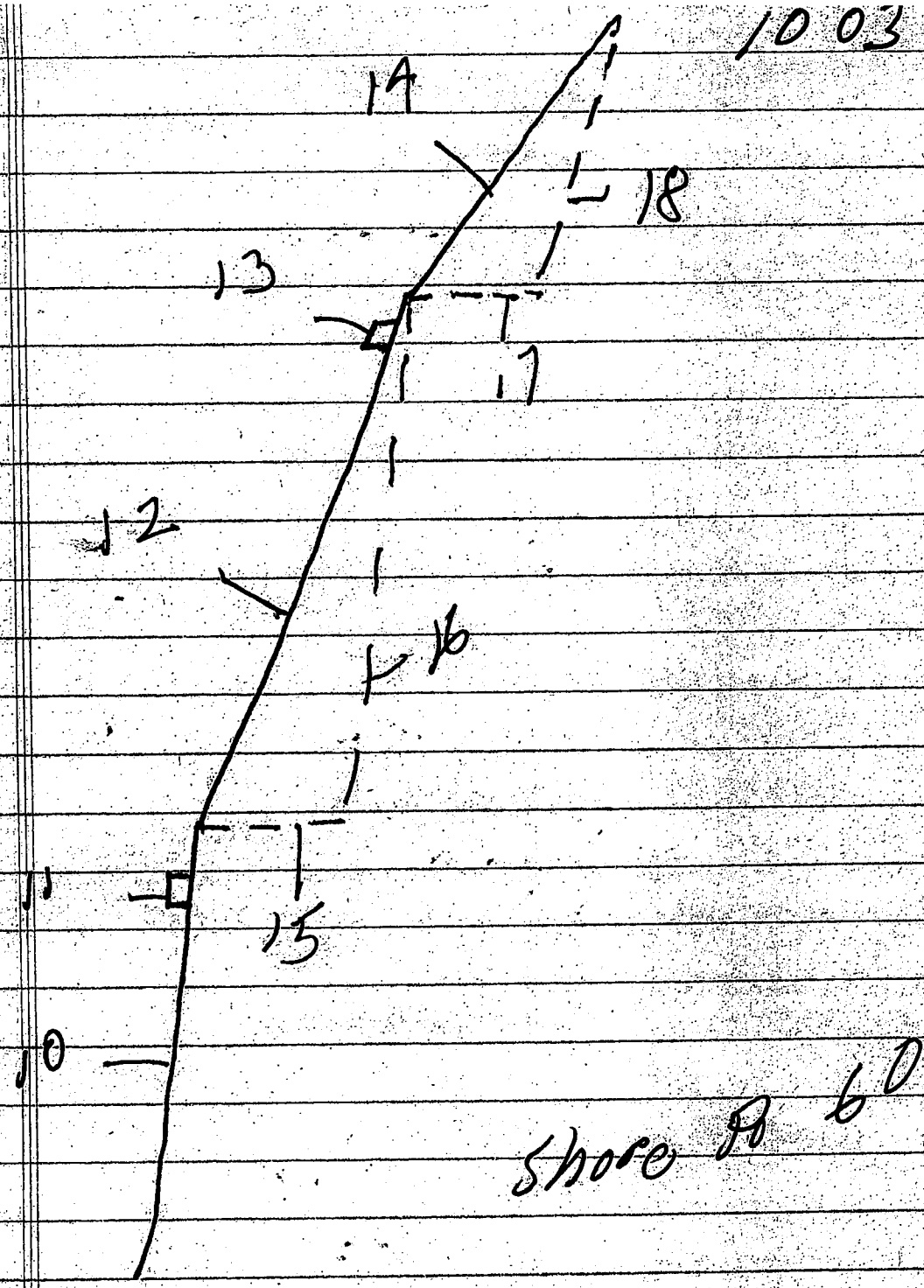

AS HOLDINGS, INC.
v. H&C MILCOR, INC.
Opposition No. 91182064
APPLICANT'S EXHIBIT
1

Applicant's
EXHIBIT

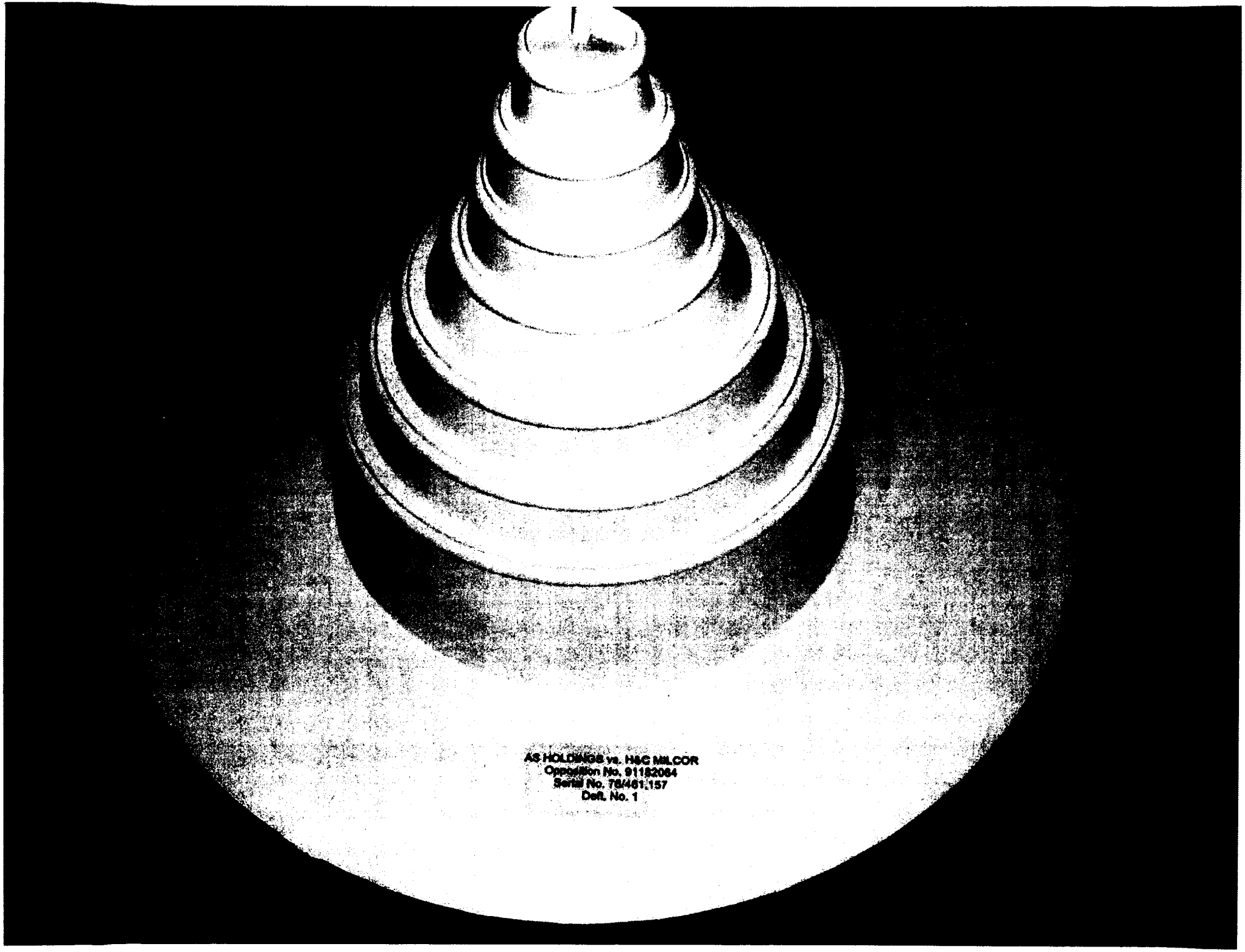
AS HOLDINGS vs. H&C MILCOR
Opposition No. 91182064
Serial No. 78/461,157
Def. No. 1

AS HOLDINGS vs. H&C MILCOR
Opposition No. [illegible]
Serial No. [illegible]
Dep. No. [illegible]

AS HOLDINGS vs H&C MILCOR
Opposition No 91182064
Serial No 76/461,157
Deft No 3

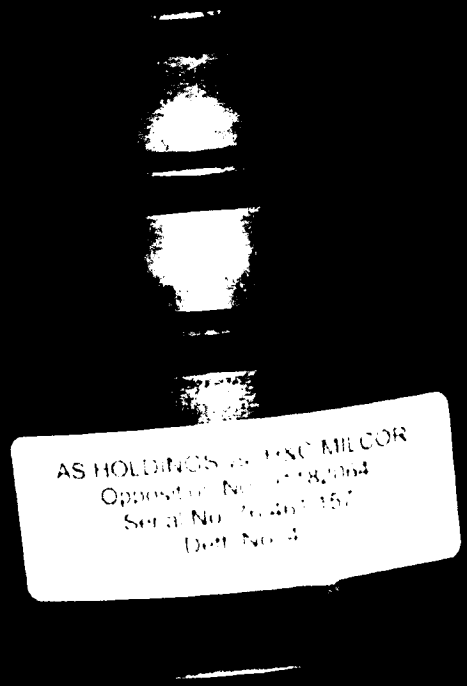
AS HOLDINGS
MILCOR
Opposition No.
Serial No.
Deft. No. 4

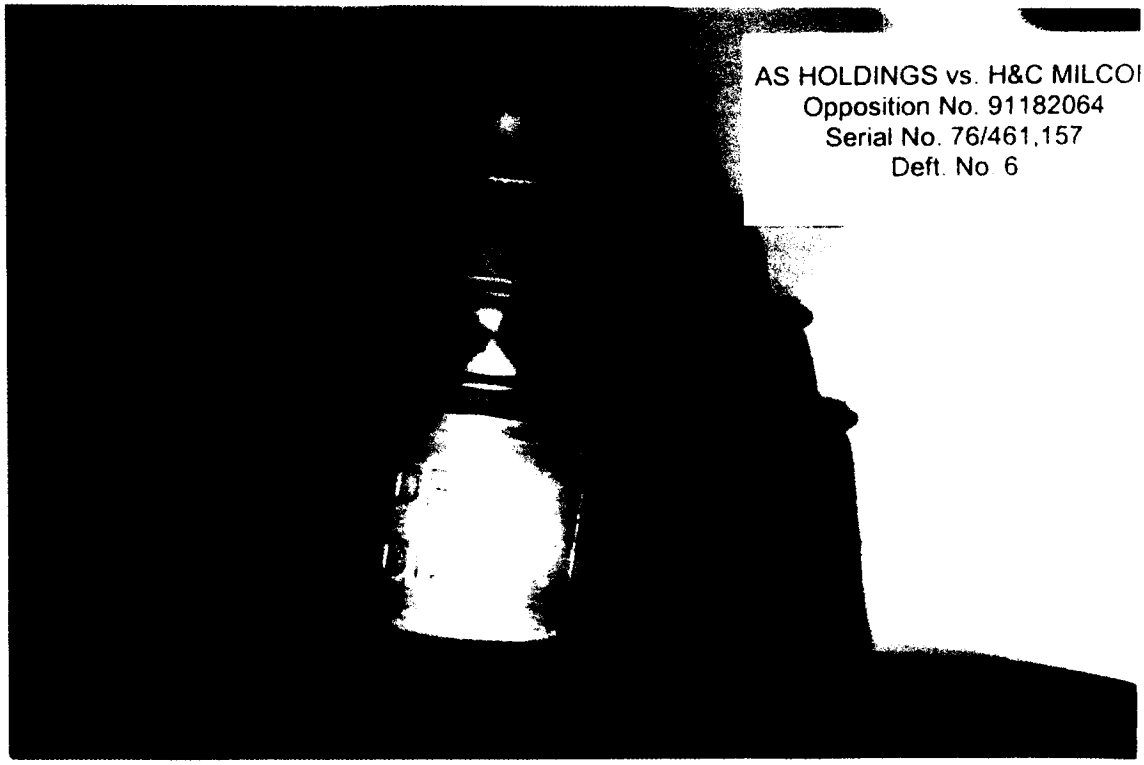

AS HOLDINGS vs. H&C MILCOI
Opposition No. 91182064
Serial No. 76/461,157
Deft. No 6

AS HOLDINGS vs. H&C MILCOR
Opposition No. 91182064
Serial No. 76/461,157
Deft. No. 7

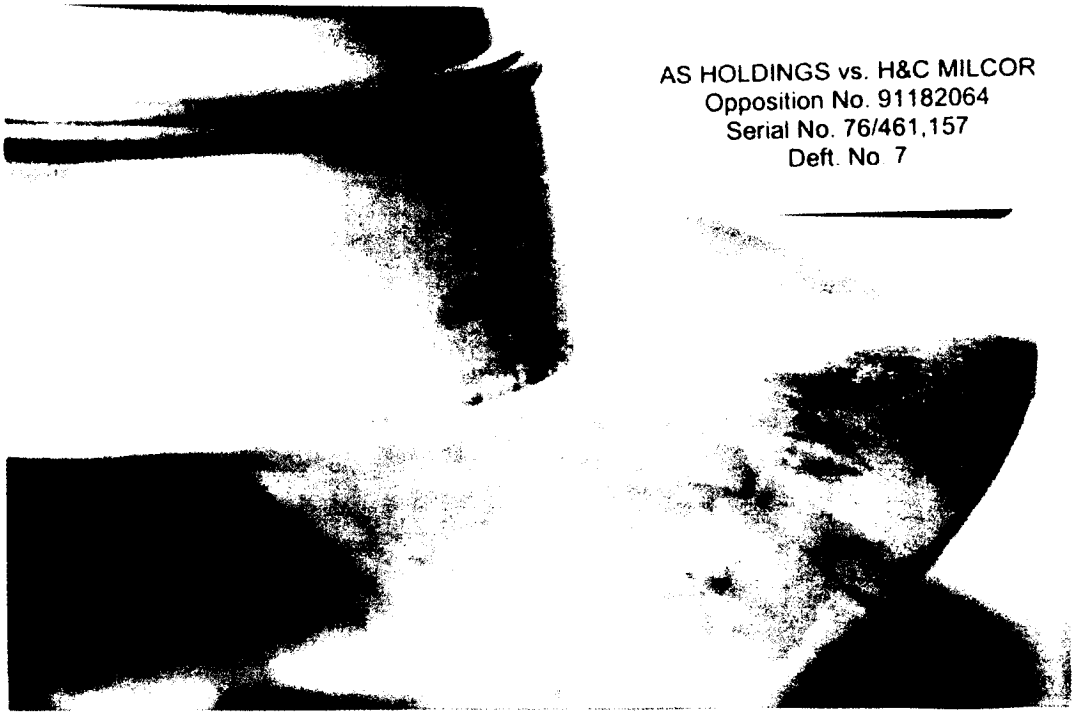

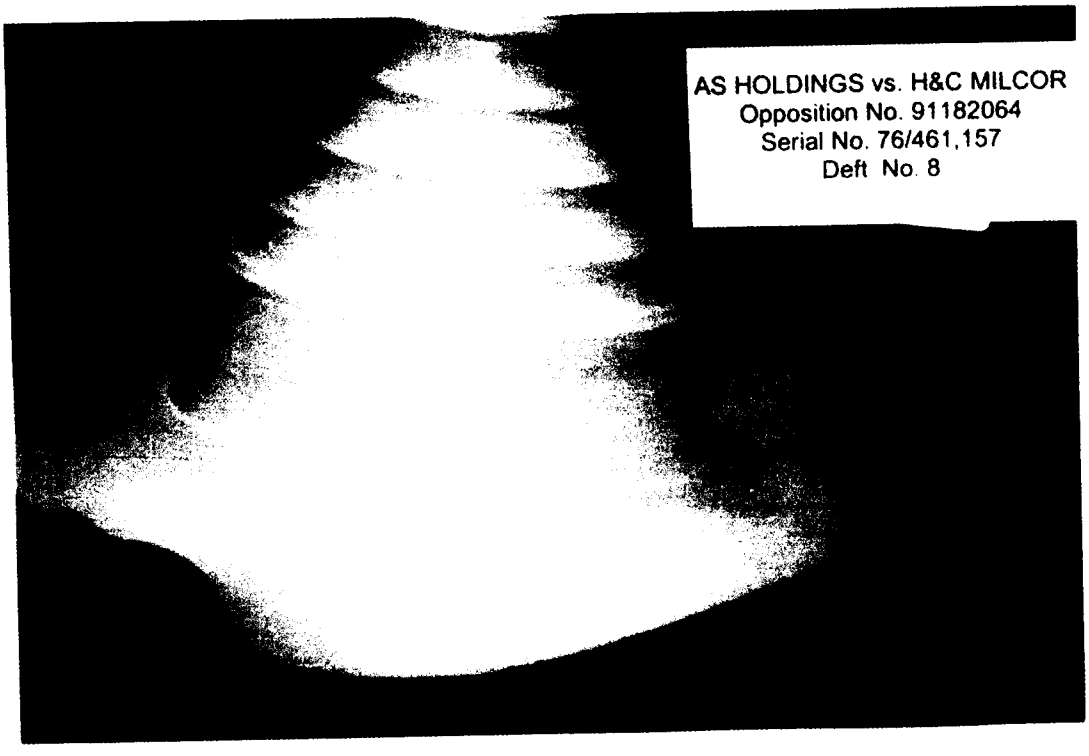

AS HOLDINGS vs. H&C MILCOR
Opposition No. 91182064
Serial No. 76/461,157
Deft No. 8

AS HOLDINGS vs. H&C MILCOF
Opposition No. 91182064
Serial No. 76/461,157
Deft. No. 9

Exh A 11.12.08

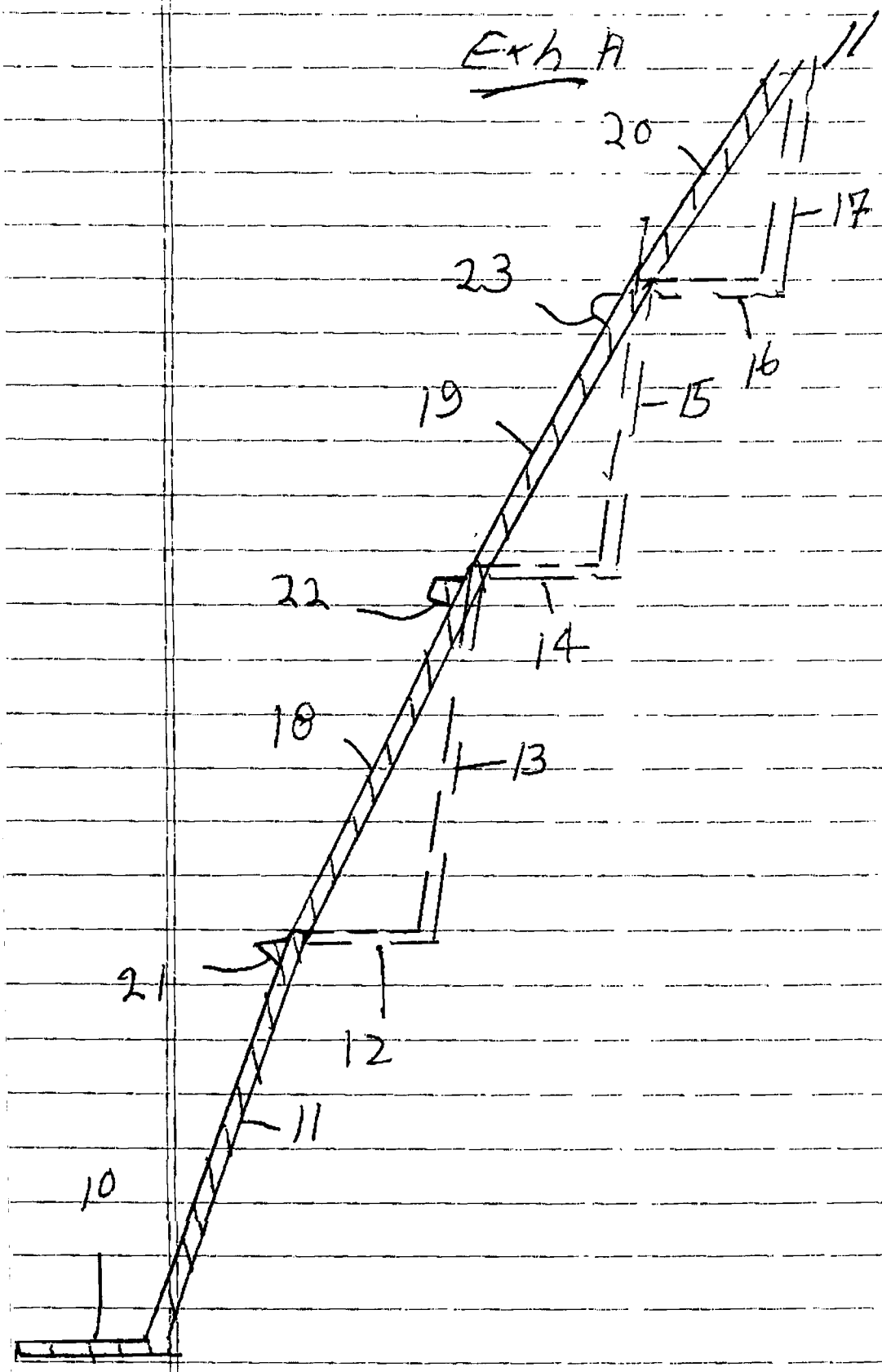

AS HOLDINGS vs. H&C MILCOR
Opposition No. 91182064
Serial No. 76/461,157
Deft. No. 10

Exh B

11 (12/13) 08

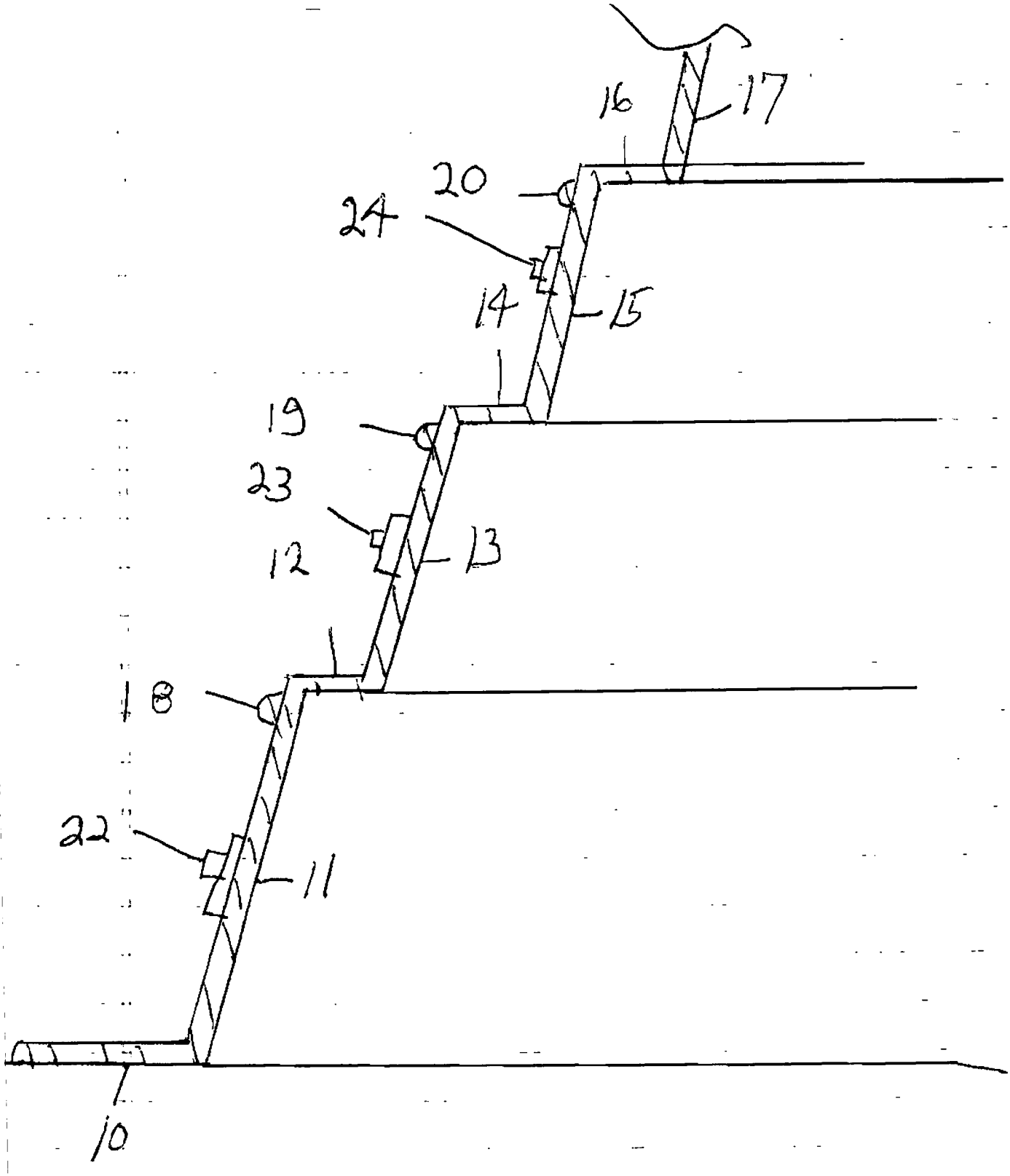

Pipe Flashings

Technical Product Information

Flashings for all size penetrations for single ply roofs

Small Pipe Boot

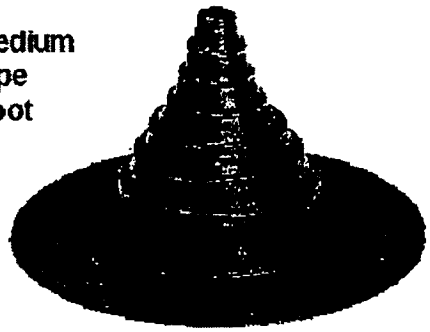

Medium Pipe Boot

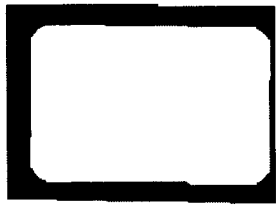

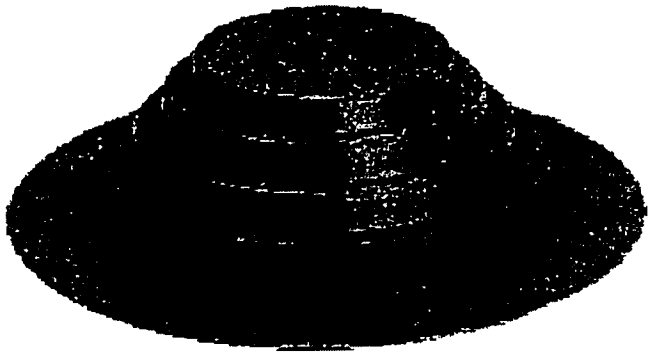

Large Pipe Boot

Quadraseal Pipe Boot

The "Pipe Boot" is an economical flashing designed for single pipe penetrations on single ply rubber roofs. The unit will accomodate virtually all pipe sizes: 1.75" and 2.75" on Small Pipe Boot, 1" through 6" on Medium Pipe Boot and 8" through 12" on Large Pipe Boot. Pipe Boots are available in EPDM, Neoprene, Hypalon, TPO, or PVC material. The Quadraseal is designed to allow as many as four pipes up to 2" in diameter to pass through one flashing. Quadraseals are available in EPDM material only. The conically shaped steps of the Portals Plus pipe flashing will securely seal all pipes and the large double thick molded rib at the top of each step offers supreme tear resistance and reinforcement, as well as a cutting guide. Utilizing the Pipe Flashings eliminates the workmanship error in field fabrication and makes flashing pipes a clean, consistent approach.

Adapters available for round, square tube, and angle iron available to fit most pipe boots.

AS HOLDINGS vs. H&C MILCOR
Opposition No. 91182064
Serial No. 76/461,157
Deft. No. 12

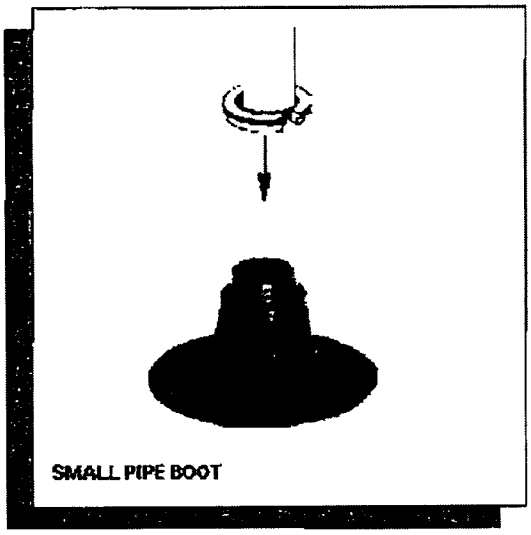

SMALL PIPE BOOT

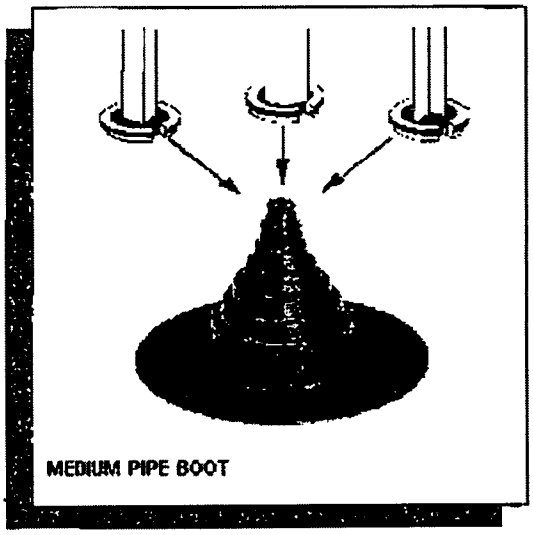

MEDIUM PIPE BOOT

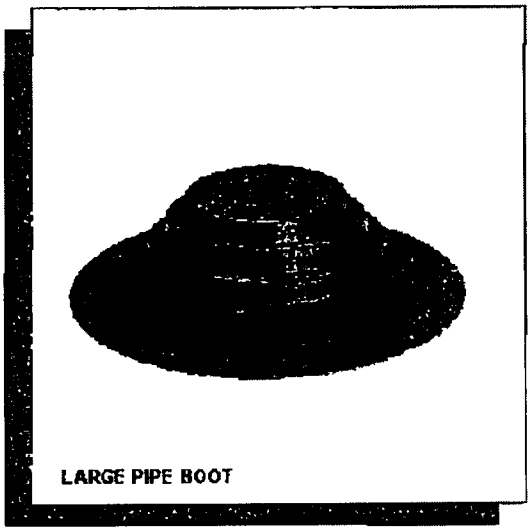

LARGE PIPE BOOT

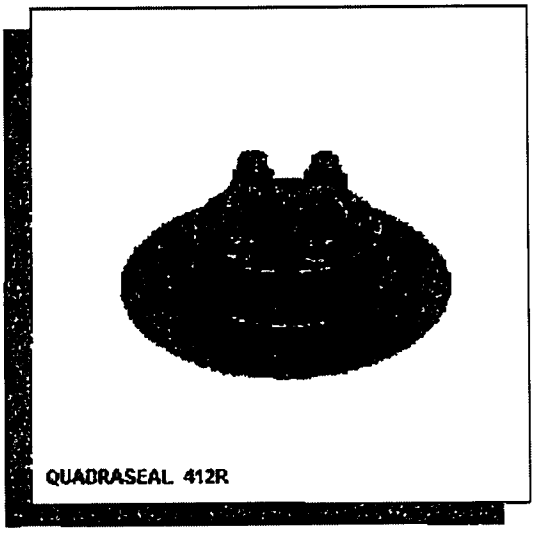

QUADRASEAL 412R

NEW UPC PART NUMBER	DESCRIPTION	QTY/CTN	LIST PRICE PER UNIT
42100	SMALL - BLACK EPDM	10	$ 19.05
42130	SMALL - WHITE EPDM	10	$ 20.40
44130	SMALL - WHITE HYPALON*	10	$ 21.75
42110	MEDIUM - BLACK EPDM	10	$ 24.95
42140	MEDIUM - WHITE EPDM	10	$ 30.10
43170	MEDIUM - BLACK NEOPRENE	10	$ 37.65
44170	MEDIUM - WHITE HYPALON*	10	$ 31.85
OEM	MEDIUM - WHITE TPO**	8	$ CF.00
OEM	MEDIUM - WHITE PVC**	8	$ CF.00
42121	LARGE - BLACK EPDM	5	$ 88.45
42151	LARGE - WHITE EPDM	5	$ 90.75
43181	LARGE - WHITE NEOPRENE	5	$ 124.75

** - ALL COLORS AVAILABLE FOR TPO & PVC (call Portals Plus)
CF - DENOTES CALL FACTORY

Quadraseals
Adapter Rings
Installation Instructions
CAD Page

Other Flashing Systems:
Pipe Portals
Double Pipe Portals
Alumi-Flash

Pipe Flashin

Technical Product Inform

Medium Pipe Boot

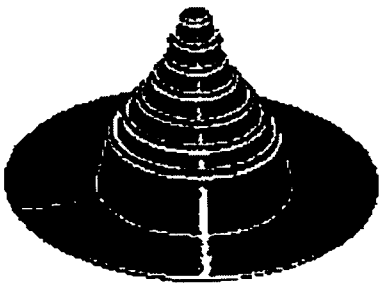

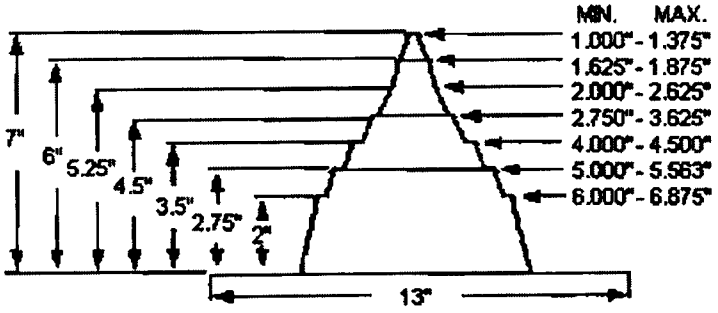

SPECIFICATION

Furnish and install the Portals Plus Medium Pipe Boot as manufactured by Portals Plus, Inc., Bensenville, IL, at all points where any projection penetrates the roof system, and is less than 6" in diameter. The Medium Pipe Boot shall include 60 mil EPDM, NEOPRENE, or HYPALON compression molded body. The Medium Pipe Boot shall also include Portals Plus' Snaplock Clamp. Whenever necessary utilize Portals Plus Adapters to seal to square tubing and angle iron and for round penetrations less than 1" in diameter. Use white or black as necessary. Attachment of Medium Pipe Boot to roof system shall be done in accordance with Portals Plus Installation Instructions and the roofing membrane manufacturer's requirements.

NEW UPC PART NUMBER	DESCRIPTION	QTY/CTN	LIST PRICE PER UNIT
42110	MEDIUM - BLACK EPDM	10	$ 22.00
42140	MEDIUM - WHITE EPDM	10	$ 26.50
43170	MEDIUM - BLACK NEOPRENE	10	$ 33.20
44170	MEDIUM - WHITE HYPALON*	10	$ 28.00

* - AVAILABLE ON A LIMITED BASIS

Quadraseals.
Adapter Rings.
Installation Instructions.
CAD Page

Other Flashing Systems:
Pipe Portals
Double Pipe Portals
Alumi-Flash

Main Page

PORTALS PLUS 484 N. Thomas Drive, Bensenville, IL 60106 TEL: (630) 595-7320 FAX: (6

All information is subject to change without notice. Dimensions and specifications shown are within manufacturing tolerances.
© Copyright Commercial Products Group of Hart & Cooley, Inc., May, 2006. All Rights Reserved.

Pipe Flashin

Technical Product Inform

Medium Pipe Boot

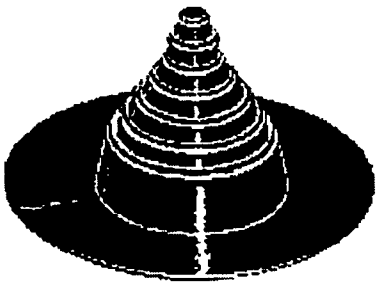

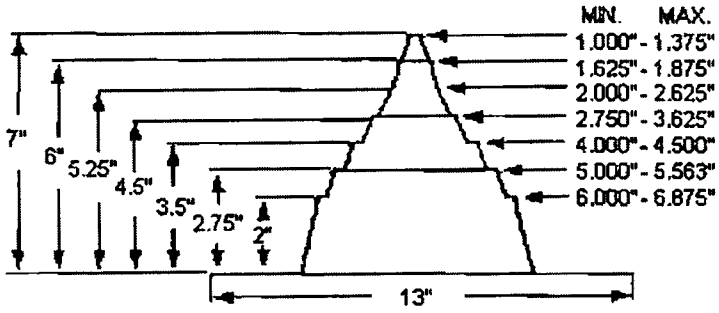

SPECIFICATION

Furnish and install the Portals Plus Medium Pipe Boot as manufactured by Portals Plus, Inc., Bensenville, IL, at all points where any projection penetrates the roof system, and is less than 6" in diameter. The Medium Pipe Boot shall include 60 mil EPDM, NEOPRENE, or HYPALON compression molded body. The Medium Pipe Boot shall also include Portals Plus' Snaplock Clamp. Whenever necessary utilize Portals Plus Adapters to seal to square tubing and angle iron and for round penetrations less than 1" in diameter. Use white or black as necessary. Attachment of Medium Pipe Boot to roof system shall be done in accordance with Portals Plus Installation Instructions and the roofing membrane manufacturer's requirements.

NEW UPC PART NUMBER	DESCRIPTION	QTY/CTN	LIST PRICE PER UNIT
42110	MEDIUM - BLACK EPDM	10	$ 22.00
42140	MEDIUM - WHITE EPDM	10	$ 26.50
43170	MEDIUM - BLACK NEOPRENE	10	$ 33.20
44170	MEDIUM - WHITE HYPALON*	10	$ 28.00

* - AVAILABLE ON A LIMITED BASIS

Quadraseals.
Adapter Rings.
Installation Instructions.
CAD Page

Other Flashing Systems:
Pipe Portals
Double Pipe Portals
Alumi-Flash

Main Page

PORTALS PLUS 434 N. Thomas Drive, Bensenville, IL 60106 TEL: (630) 595-7623 FAX: (6

All information is subject to change without notice. Dimensions and specifications shown are within manufacturing tolerances.
© Copyright Commercial Products Group of Hart & Cooley, Inc., May, 2006. All Rights Reserved.

Pipe Flashin

Technical Product Inform

Medium Pipe Boot

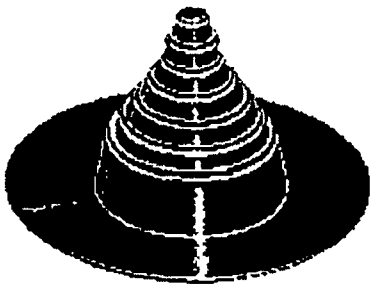

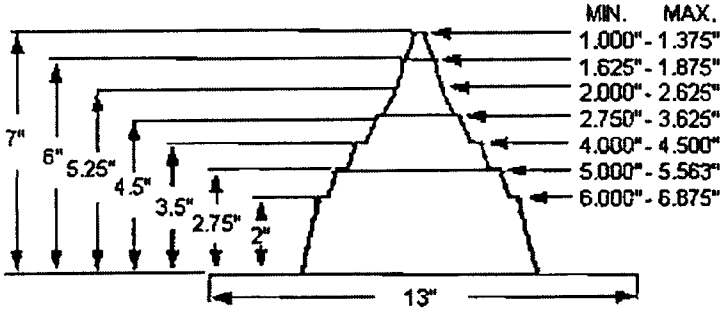

SPECIFICATION

Furnish and install the Portals Plus Medium Pipe Boot as manufactured by Portals Plus, Inc., Bensenville, IL, at all points where any projection penetrates the roof system, and is less than 6" in diameter. The Medium Pipe Boot shall include 60 mil EPDM, NEOPRENE, or HYPALON compression molded body. The Medium Pipe Boot shall also include Portals Plus' Snaplock Clamp. Whenever necessary utilize Portals Plus Adapters to seal to square tubing and angle iron and for round penetrations less than 1" in diameter. Use white or black as necessary. Attachment of Medium Pipe Boot to roof system shall be done in accordance with Portals Plus Installation Instructions and the roofing membrane manufacturer's requirements.

NEW UPC PART NUMBER	DESCRIPTION	QTY/CTN	LIST PRICE PER UNIT
42110	MEDIUM - BLACK EPDM	10	**$ 22.00**
42140	MEDIUM - WHITE EPDM	10	**$ 26.50**
43170	MEDIUM - BLACK NEOPRENE	10	**$ 33.20**
44170	MEDIUM - WHITE HYPALON*	10	**$ 28.00**

* - AVAILABLE ON A LIMITED BASIS

Quadraseals.
Adapter Rings.
Installation Instructions.
CAD Page

Other Flashing Systems:
Pipe Portals
Double Pipe Portals
Alumi-Flash

Main Page

PORTALS PLUS 484 N. Thomas Drive, Bensenville, IL 60106 TEL: (630) 595-7320 FAX: (6

All information is subject to change without notice. Dimensions and specifications shown are within manufacturing tolerances.
© Copyright Commercial Products Group of Hart & Cooley, Inc., May, 2006. All Rights Reserved.

Pipe Flashin

Technical Product Inform

Flashings for all size penetrations for single ply roofs

Small Pipe Boot

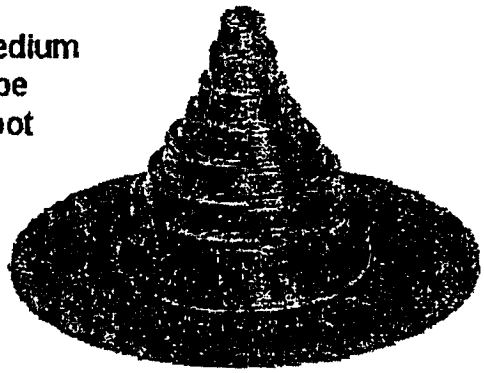

Medium Pipe Boot

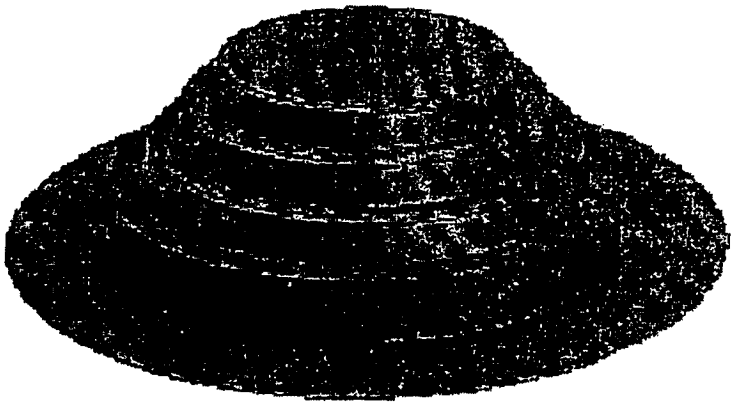

Large Pipe Boot

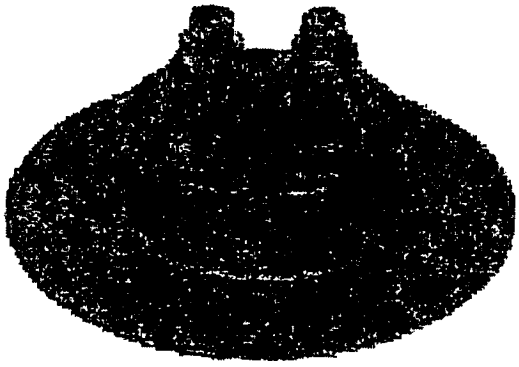

Quadraseal Pipe Boot

The "Pipe Boot" is an economical flashing designed for single pipe penetrations on single ply rubber roofs. The unit will accomodate virtually all pipe sizes: 1.75" and 2.75" on Small Pipe Boot, 1" through 6" on Medium Pipe Boot and 8" through 12" on Large Pipe Boot. Pipe Boots are available in EPDM, Neoprene, Hypalon, TPO, or PVC material. The Quadraseal is designed to allow as many as four pipes up to 2" in diameter to pass through one flashing. Quadraseals are available in EPDM material only. The conically shaped steps of the Portals Plus pipe flashing will securely seal all pipes and the large double thick molded rib at the top of each step offers supreme tear resistance and reinforcement, as well as a cutting guide. Utilizing the Pipe Flashings eliminates the workmanship error in field fabrication and makes flashing pipes a clean, consistent approach.

Adapters available for round, square tube, and angle iron available to fit most pipe boots.

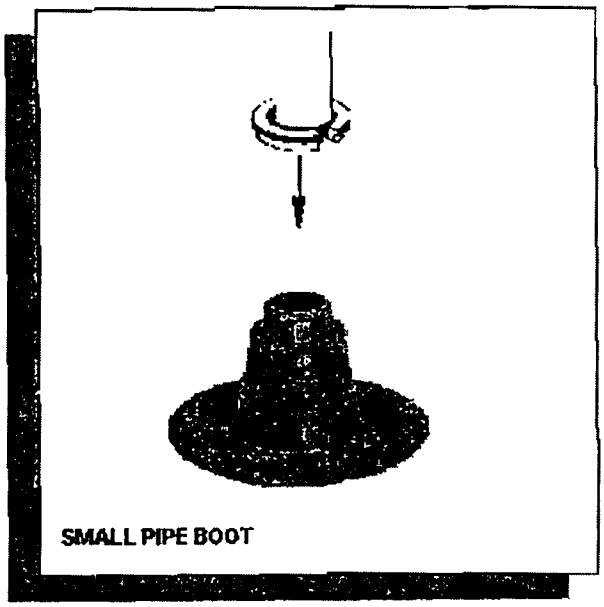

SMALL PIPE BOOT

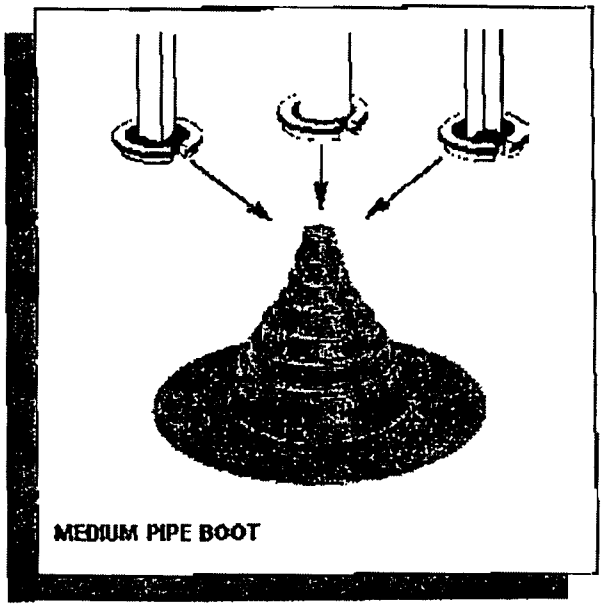

MEDIUM PIPE BOOT

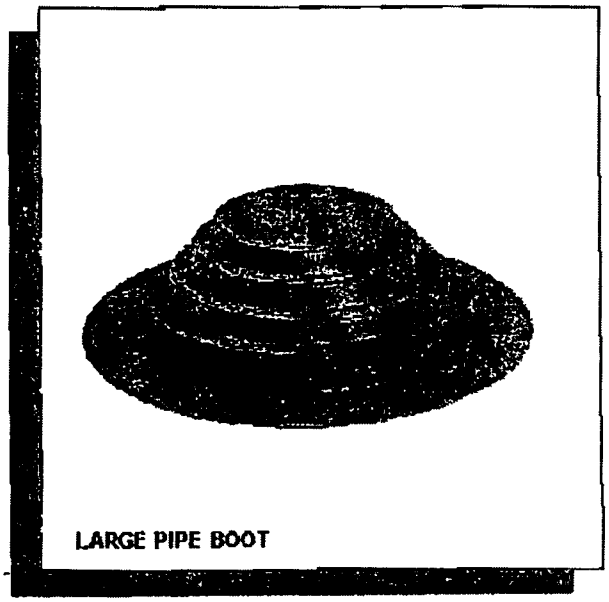

LARGE PIPE BOOT

QUADRASEAL 412R

NEW UPC PART NUMBER	DESCRIPTION	QTY/CTN	LIST PRICE PER UNIT
42100	SMALL - BLACK EPDM	10	$ 16.80
42130	SMALL - WHITE EPDM	10	$ 18.00
44130	SMALL - WHITE HYPALON*	10	$ 19.20
42110	MEDIUM - BLACK EPDM	10	$ 22.00
42140	MEDIUM - WHITE EPDM	10	$ 26.50
43170	MEDIUM - BLACK NEOPRENE	10	$ 33.20
44170	MEDIUM - WHITE HYPALON*	10	$ 28.00
OEM	MEDIUM - WHITE TPO**	8	$ CF.00
OEM	MEDIUM - WHITE PVC**	8	$ CF.00
42121	LARGE - BLACK EPDM	5	$ 78.00
42151	LARGE - WHITE EPDM	5	$ 80.00
43181	LARGE - WHITE NEOPRENE	5	$ 110.00

** - ALL COLORS AVAILABLE FOR TPO & PVC (call Portals Plus)
CF - DENOTES CALL FACTORY

ALP00436

Quadraseals
Adapter Rings
Installation Instructions
CAD Page

Other Flashing Systems:
Pipe Portals
Double Pipe Portals
Alumi-Flash

PORTALS PLUS 484 N. Thomas Drive, Bensenville, IL 60106 TEL: (630) 595-7320 FAX: (6

All information is subject to change without notice. Dimensions and specifications shown are within manufacturing tolerances.
© Copyright Commercial Products Group of Hart & Cooley, Inc., May, 2006. All Rights Reserved.

PLEASE GIVE US FEEDBACK

Portals Plus Website Survey

- Product Search
- Specification Wizard
- CAD Details
- Continuing Education
- Product Information
- Part Number Search
- Installation
- Warranty
- Contacts

Portals Plus manufactures solutions for roof leak problems. Roof leaks are the biggest problem of architects and building owners. 85% of all roof leaks occur at penetrations and corners due to poor details which fail to accommodate movement. Extreme roof temperature swings require durable and flexible flashings. However, high labor costs and low common denominator standards create conditions for poor workmanship and non-functional field fabricated flashings. A "good enough" attitude creates temporary expedients, such as pitch pockets or pans and their derivatives, but at the building owner's ongoing expense. The National Roofing Contractors Association (NRCA) states that "Pitch pockets or pans by their design, are not intended to be continuously watertight. Their use should not be encouraged since better methods are available to accomplish the same end. Pitch pans or pockets require frequent inspection and maintenance, and usually a great deal of damage can occur before the leak around a pitch pocket or pan is evident."

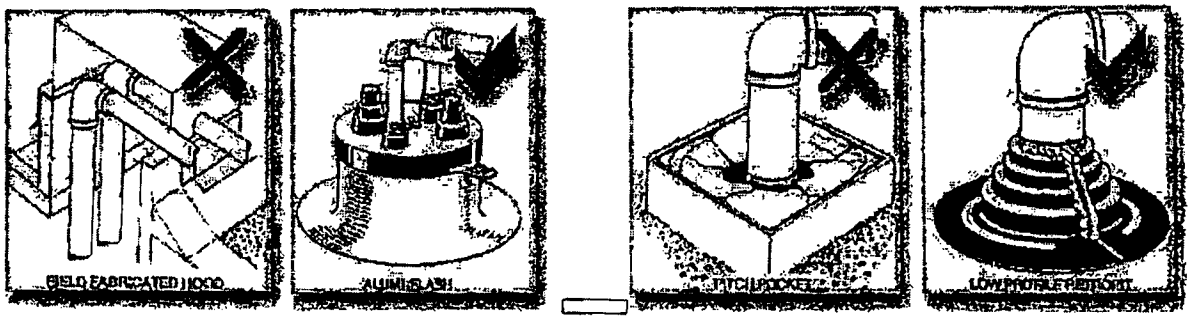

Portals Plus has been manufacturing its unique products since 1977 in state-of-the-art manufacturing facilities in the Chicago suburbs.

Portals Plus products are readily available across the USA and Canada through a network of local stocking wholesale distributors. Call 800-624-8642 or 630-595-7320 for the stocking distributor near you or for international availability.

Commercial Products Group 484 N. Thomas Drive, Bensenville, IL 60106
TEL: 630-595-7320 FAX: 630-766-6269
portalsplus@portalsplus.com

© Copyright Commercial Products Group of Hart & Cooley, Inc, June, 2006. All Rights Reserved

Product Selection

SINGLE PIPE PORTAL SYSTEM

Pipe Portal System - for one to eight penetrations in one watertight unit. The Pipe Portal System is a versatile, leak proof, and weathertight solution to routing pipes through a roof. The Pipe Portal System is designed to allow both horizontal and vertical pipe movement, yet provide a maintenance-free permanent installation which accommodates penetrations from 3/8" round through 12" round, and, with Portals Plus Adapter Rings, angle irons and square tubes, as well. Compression molded EPDM rubber caps provide the flexible seal at each penetration. Stainless Snaplock Clamps provide an added measure of assurance at each penetration. The flexible EPDM caps are mechanically sealed to the Pipe Portal cover by a double "Weather-Tite Pressure Seal", which consists of two beads formed into the collar of the cover that mate with double grooves molded into the inside of the cap. The curb cover is molded of one piece ultraviolet-resistant ABS plastic and laminated with an acrylic coating for extra protection. This manufacturing process creates exposed materials that are both ozone and ultraviolet resistant with a serviceable temperature range of -40F to +160F. To complete the system, the roof curb is fabricated from heavy 18 gauge galvanized iron with mitered and welded corners and insulated on all four sides. The Pipe Portal System allows roofing membranes and base flashings to be installed in accordance with the National Roofing Contractors Association (NRCA) recommendations.

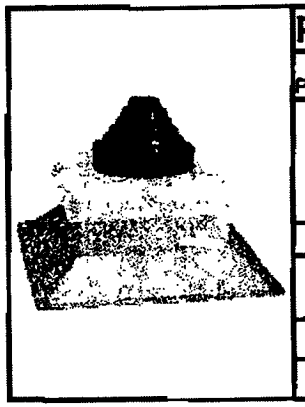

PIPE PORTAL® (Cover, Black Cap & Clamps) RC-3A

NEW UPC PART NUMBER	DESCRIPTION	QTY/CTN	LIST PRICE PER UNIT
32005 32015 32025 32035	w/ 126 BLACK CAP (1 - 2" to 6" pipe) w/ 212 BLACK CAP (2 - .375" to 1 & 2 - 1" - 2" pipes) w/ 412 BLACK CAP (4 - 1" to 2" pipes) w/ 481 BLACK CAP (4 - .375" to 1" pipes)	5	$ 79.00
32041	w/ 182 BLACK CAP (1 - 8" to 12" pipe)	1	$ 126.00
32055 32065	w/ 126 WHITE CAP (1 - 2" to 6" pipe) w/ 212 WHITE CAP (2 - .375" to 1 & 2 - 1" - 2" pipes)	5	$ 80.00
32111	SMALL RC-3A CANTED CURB - 8" High	1	$ 83.00
32141	LARGE RC-3A CANTED CURB - 8" High	1	$ 159.00

See more information about the caps.

SINGLE PIPE PORTAL SYSTEM

Pipe Portal System - for one to eight penetrations in one watertight unit. The Pipe Portal System is a versatile, leak proof, and weathertight solution to routing pipes through a roof. The Pipe Portal System is designed to allow both horizontal and vertical pipe movement, yet provide a maintenance-free permanent installation which accommodates penetrations from 3/8" round through 12" round, and, with Portals Plus Adapter Rings, angle irons and square tubes, as well. Compression molded EPDM rubber caps provide the flexible seal at each penetration. Stainless Snaplock Clamps provide an added measure of assurance at each penetration. The flexible EPDM caps are mechanically sealed to the Pipe Portal cover by a double "Weather-Tite Pressure Seal", which consists of two beads formed into the collar of the cover that mate with double grooves molded into the inside of the cap. The curb cover is molded of one piece ultraviolet-resistant ABS plastic and laminated with an acrylic coating for extra protection. This manufacturing process creates exposed materials that are both ozone and ultraviolet resistant with a serviceable temperature range of -40F to +160F. To complete the system, the roof curb is fabricated from heavy 18 gauge galvanized iron with mitered and welded corners and insulated on all four sides. The Pipe Portal System allows roofing membranes and base flashings to be installed in accordance with the National Roofing Contractors Association (NRCA) recommendations.

PIPE PORTAL® (Cover, Black Cap & Clamps) RC-4A

NEW UPC PART NUMBER	DESCRIPTION	QTY/CTN	LIST PRICE PER UNIT
32005 32015 32025	w/ 126 BLACK CAP (1 - 2" to 6" pipe) w/ 212 BLACK CAP (2 - .375" to 1 & 2 - 1" - 2" pipes) w/ 412 BLACK CAP (4 - 1" to 2" pipes)	5	$ 79.00

ALP00440

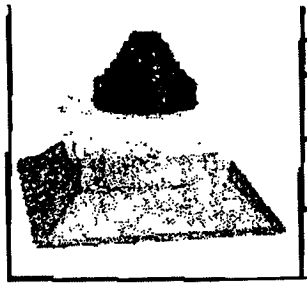

32035	w/ 481 BLACK CAP (4 - .375" to 1" pipes)		
32041	w/ 182 BLACK CAP (1 - 8" to 12" pipe)	1	$ 126.00
32055 32065	w/ 126 WHITE CAP (1 - 2" to 6" pipe) w/ 212 WHITE CAP (2 - .375" to 1 & 2 - 1" - 2" pipes)	5	$ 80.00
32121	SMALL RC-4A RAISED CANTED CURB -9 1/2" High	1	$ 83.00
32151	LARGE RC-4A RAISED CANTED CURB -9 1/2" High	1	$ 159.00

DOUBLE PIPE PORTAL SYSTEM

Pipe Portal System - for one to eight penetrations in one watertight unit. The Pipe Portal System is a versatile, leak proof, and weathertight solution to routing pipes through a roof. The Pipe Portal System is designed to allow both horizontal and vertical pipe movement, yet provide a maintenance-free permanent installation which accommodates penetrations from 3/8" round through 12" round, and, with Portals Plus Adapter Rings, angle irons and square tubes, as well. Compression molded EPDM rubber caps provide the flexible seal at each penetration. Stainless Snaplock Clamps provide an added measure of assurance at each penetration. The flexible EPDM caps are mechanically sealed to the Pipe Portal cover by a double "Weather-Tite Pressure Seal", which consists of two beads formed into the collar of the cover that mate with double grooves molded into the inside of the cap. The curb cover is molded of one piece ultraviolet-resistant ABS plastic and laminated with an acrylic coating for extra protection. This manufacturing process creates exposed materials that are both ozone and ultraviolet resistant with a serviceable temperature range of -40F to +160F. To complete the system, the roof curb is fabricated from heavy 16 gauge galvanized iron with mitered and welded corners and insulated on all four sides. The Pipe Portal System allows roofing membranes and base flashings to be installed in accordance with the National Roofing Contractors Association (NRCA) recommendations.

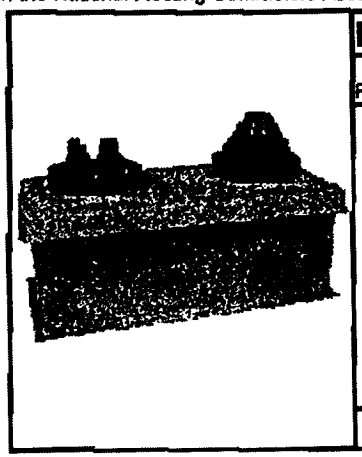

DOUBLE PIPE PORTAL® (Cover, Cap & Clamps) RC-2A

NEW UPC PART NUMBER	DESCRIPTION	QTY/CTN	LIST PRICE PER UNIT
36002	DOUBLE COVER & CAPS w/126 & 212 BLACK CAP	2	$ 239.00
36012	DOUBLE COVER & CAPS w/126 & 412 BLACK CAP		
36022	DOUBLE COVER & CAPS w/126 & 481 BLACK CAP		
36032	DOUBLE COVER & CAPS w/126 & 126 BLACK CAP		
36042	DOUBLE COVER & CAPS w/212 & 212 BLACK CAP		
36052	DOUBLE COVER & CAPS w/212 & 412 BLACK CAP		
36062	DOUBLE COVER & CAPS w/212 & 481 BLACK CAP		
36092	DOUBLE COVER & CAPS w/412 & 412 BLACK CAP		
36102	DOUBLE COVER & CAPS w/412 & 481 BLACK CAP		
36142	DOUBLE COVER & CAPS w/481 & 481 BLACK CAP		
32161	DOUBLE RC-2A STRAIGHT SIDED CURB -11" High	1	$ 176.00

See more information about the caps.

ALP00441

DOUBLE PIPE PORTAL SYSTEM

Pipe Portal System - for one to eight penetrations in one watertight unit. The Pipe Portal System is a versatile, leak proof, and weathertight solution to routing pipes through a roof. The Pipe Portal System is designed to allow both horizontal and vertical pipe movement, yet provide a maintenance-free permanent installation which accommodates penetrations from 3/8" round through 12" round, and, with Portals Plus Adapter Rings, angle irons and square tubes, as well. Compression molded EPDM rubber caps provide the flexible seal at each penetration. Stainless Snaplock Clamps provide an added measure of assurance at each penetration. The flexible EPDM caps are mechanically sealed to the Pipe Portal cover by a double "Weather-Tite Pressure Seal", which consists of two beads formed into the collar of the cover that mate with double grooves molded into the inside of the cap. The curb cover is molded of one piece ultraviolet-resistant ABS plastic and laminated with an acrylic coating for extra protection. This manufacturing process creates exposed materials that are both ozone and ultraviolet resistant with a serviceable temperature range of -40F to +160F. To complete the system, the roof curb is fabricated from heavy 18 gauge galvanized iron with mitered and welded corners and insulated on all four sides. The Pipe Portal System allows roofing membranes and base flashings to be installed in accordance with the National Roofing Contractors Association (NRCA) recommendations.

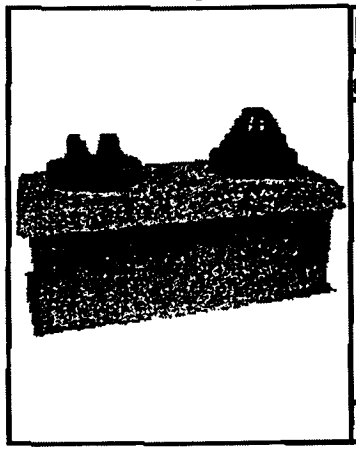

DOUBLE PIPE PORTAL® (Cover, Cap & Clamps) RC-3A

NEW UPC PART NUMBER	DESCRIPTION	QTY/CTN	LIST PRICE PER UNIT
36002	DOUBLE COVER & CAPS w/126 & 212 BLACK CAP	2	$ 239.00
36012	DOUBLE COVER & CAPS w/126 & 412 BLACK CAP		
36022	DOUBLE COVER & CAPS w/126 & 481 BLACK CAP		
36032	DOUBLE COVER & CAPS w/126 & 126 BLACK CAP		
36042	DOUBLE COVER & CAPS w/212 & 212 BLACK CAP		
36052	DOUBLE COVER & CAPS w/212 & 412 BLACK CAP		
36062	DOUBLE COVER & CAPS w/212 & 481 BLACK CAP		
36092	DOUBLE COVER & CAPS w/412 & 412 BLACK CAP		
36102	DOUBLE COVER & CAPS w/412 & 481 BLACK CAP		
36142	DOUBLE COVER & CAPS w/481 & 481 BLACK CAP		
32171	DOUBLE RC-3A CANTED CURB - 8" High	1	$ 176.00

See more information about the caps.

DOUBLE PIPE PORTAL SYSTEM

Pipe Portal System - for one to eight penetrations in one watertight unit. The Pipe Portal System is a versatile, leak proof, and weathertight solution to routing pipes through a roof. The Pipe Portal System is designed to allow both horizontal and vertical pipe movement, yet provide a maintenance-free permanent installation which accommodates penetrations from 3/8" round through 12" round, and, with Portals Plus Adapter Rings, angle irons and square tubes, as well. Compression molded EPDM rubber caps provide the flexible seal at each penetration. Stainless Snaplock Clamps provide an added measure of assurance at each penetration. The flexible EPDM caps are mechanically sealed to the Pipe Portal cover by a double "Weather-Tite Pressure Seal", which consists of two beads formed into the collar of the cover that mate with double grooves molded into the inside of the cap. The curb cover is molded of one piece ultraviolet-resistant ABS plastic and laminated with an acrylic coating for extra protection. This manufacturing process creates exposed materials that are both ozone and ultraviolet resistant with a serviceable temperature range of -40F to +160F. To complete the system, the roof curb is fabricated from heavy 18 gauge galvanized iron with mitered and welded corners and insulated on all four sides. The Pipe Portal System allows roofing membranes and base flashings to be installed in accordance with the National Roofing Contractors Association (NRCA) recommendations.

DOUBLE PIPE PORTAL® (Cover, Cap & Clamps) RC-4A

NEW UPC PART NUMBER	DESCRIPTION	QTY/CTN	LIST PRICE PER UNIT
36002	DOUBLE COVER & CAPS w/126 & 212 BLACK CAP		
36012	DOUBLE COVER & CAPS w/126 & 412 BLACK CAP		
36022	DOUBLE COVER & CAPS w/126 & 481 BLACK CAP		

ALP00442

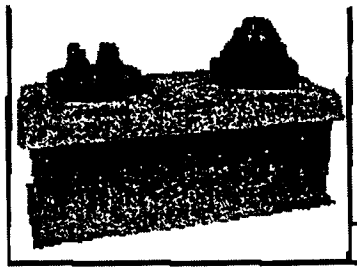	36032	DOUBLE COVER & CAPS w/126 & 126 BLACK CAP	2	$ 239.00
	36042	DOUBLE COVER & CAPS w/212 & 212 BLACK CAP		
	36052	DOUBLE COVER & CAPS w/212 & 412 BLACK CAP		
	36062	DOUBLE COVER & CAPS w/212 & 481 BLACK CAP		
	36092	DOUBLE COVER & CAPS w/412 & 412 BLACK CAP		
	36102	DOUBLE COVER & CAPS w/412 & 481 BLACK CAP		
	36142	DOUBLE COVER & CAPS w/481 & 481 BLACK CAP		
	32181	DOUBLE RC-4A RAISED CANTED CURB -9 1/2" High	1	$ 176.00

See more information about the caps.

PIPE BOOTS

Pipe Flashings (boots)- for economical flashings of single ply roofing systems. Pipe Boots (or witches' hats) are economical flashings designed for single pipe penetrations through single ply roofs. Virtually any common pipe size can be accommodated with one of these boots. The conically shaped steps of the Portals Plus Pipe Boots will securely seal all pipes and its large double thick molded rib at the top of each step offers superior tear resistance and reinforcement, as well as a cutting guide for installation. The Portls Plus Stainless Snaplock Clamp maximizes the secure seal at the penetration. Utilizing the Pipe Boots eliminates workmanship errors in field fabrication and makes flashing pipes a clean, consistent approach. Portals Plus Adapter Rings can be used to seal very small pipes, as well as unusual shapes such as angle irons and square tubes.

Other Flashing Systems: Pipe Portals, Double Pipe Portals, Alumi-Flash

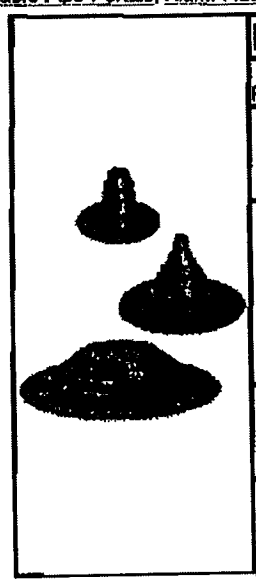

PIPE BOOTS (w/ CLAMPS)

NEW UPC PART NUMBER	DESCRIPTION	QTY/CTN	LIST PRICE PER UNIT
42100	SMALL - BLACK EPDM	10	$ 16.80
42130	SMALL - WHITE EPDM	10	$ 18.00
44130	SMALL - WHITE HYPALON*	10	$ 19.20
42110	MEDIUM - BLACK EPDM	10	$ 22.00
42140	MEDIUM - WHITE EPDM	10	$ 26.50
43170	MEDIUM - BLACK NEOPRENE	10	$ 33.20
44170	MEDIUM - WHITE HYPALON*	10	$ 28.00
46209	MEDIUM - WHITE TPO**	8	$ CF.00
48009	MEDIUM - WHITE PVC**	8	$ CF.00
42121	LARGE - BLACK EPDM	5	$ 78.00
42151	LARGE - WHITE EPDM	5	$ 80.00
43181	LARGE - BLACK NEOPRENE	5	$ 110.00
45000	QUADRASEAL 212R - BLACK EPDM	10	$ 32.00
45010	QUADRASEAL 412R - BLACK EPDM	10	$ 32.00
45020	QUADRASEAL 481R - BLACK EPDM	10	$ 32.00

* - AVAILABLE ON A LIMITED BASIS

** - ALL COLORS AVAILABLE (call Portals Plus)

ALP00443

PIPE BOOTS

Pipe Flashings (boots)- for economical flashings of single ply roofing systems. Pipe Boots (or witches' hats) are economical flashings designed for single pipe penetrations through single ply roofs. Virtually any common pipe size can be accommodated with one of these boots. The conically shaped steps of the Portals Plus Pipe Boots will securely seal all pipes and its large double thick molded rib at the top of each step offers superior tear resistance and reinforcement, as well as a cutting guide for installation. The Portls Plus Stainless Snaplock Clamp maximizes the secure seal at the penetration. Utilizing the Pipe Boots eliminates workmanship errors in field fabrication and makes flashing pipes a clean, consistent approach. Portals Plus Adapter Rings can be used to seal very small pipes, as well as unusual shapes such as angle irons and square tubes.

Other Flashing Systems: Pipe Portals, Double Pipe Portals, Alumi-Flash

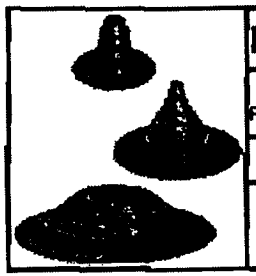

PIPE BOOTS (w/ ADHESIVE TAPE)

NEW UPC PART NUMBER	DESCRIPTION	QTY/CTN	LIST PRICE PER UNIT
42500	SMALL - BLACK EPDM	10	$ 22.60
42510	MEDIUM - BLACK EPDM	10	$ 32.60
43570	MEDIUM - BLACK NEOPRENE	10	$ 43.60

DECK-MATE

Deck-Mates- for watertight flashing of metal roof & wall systems. Deck-Mates are designed in a multitude of sizes to accommodate penetrations from 1/8" to 26" round and work in conjunction with any configuration of metal roofing or siding panel. The Portals Plus Deck-Mate is engineered with an aluminum flanged base that can be bent by hand to conform to the roof profile, irregularities, or slopes. The aluminum flange is bonded to the flexible boot during the molding process and is completely isolated from the underside of the boot to prevent any potential galvanic corrosion such as happens with solid metal flashings. Deck-Mates are available in two flexible boot materials- EPDM, with a serviceable temperature range of -60F to +270F, and Silicone, for both extremely low and extremely high temperature applications, with a serviceable temperature range of -100F to +500F. Installation is quick, easy, and secure, requiring only an approved sealant on the underside and stainless fasteners. Portals Plus Adapter Rings can further extend the capabilities of the Deck-Mates by sealing unusual shapes such as angle irons and square tubes.

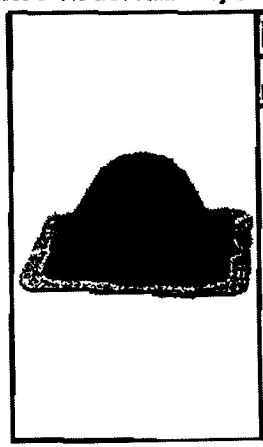

EPDM DECK-MATE

NEW UPC PART NUMBER	DESCRIPTION	QTY/CTN	LIST PRICE PER UNIT
81006	DM#0 1/8" - 3/4"	15	$ 14.20
81016	DM#1 1/4" - 2"	15	$ 16.90
81026	DM#2 1" - 3-1/4"	15	$ 20.50
81036	DM#3 1/4" - 4"	15	$ 24.40
81040	DM#4 3" - 6"	10	$ 27.90
81050	DM#5 4" - 7"	10	$ 30.15
81060	DM#6 5" - 9"	10	$ 54.55
81070	DM#7 6" - 11"	10	$ 65.80
81085	DM#8 7" - 13"	5	$ 75.40
81091	DM#9 10" - 18"	1	$ 153.65
81101	DM#10 13" - 26"	1	$ 372.20

DECK-MATE

Deck-Mates- for watertight flashing of metal roof & wall systems. Deck-Mates are designed in a multitude of sizes to accommodate penetrations from 1/8" to 26" round and work in conjunction with any

configuration of metal roofing or siding panel. The Portals Plus Deck-Mate is engineered with an aluminum flanged base that can be bent by hand to conform to the roof profile, irregularities, or slopes. The aluminum flange is bonded to the flexible boot during the molding process and is completely isolated from the underside of the boot to prevent any potential galvanic corrosion such as happens with solid metal flashings. Deck-Mates are available in two flexible boot materials- EPDM, with a serviceable temperature range of -60F to +270F, and Silicone, for both extremely low and extremely high temperature applications, with a serviceable temperature range of -100F to +500F. Installation is quick, easy, and secure, requiring only an approved sealant on the underside and stainless fasteners. Portals Plus Adapter Rings can further extend the capabilities of the Deck-Mates by sealing unusual shapes such as angle irons and square tubes.

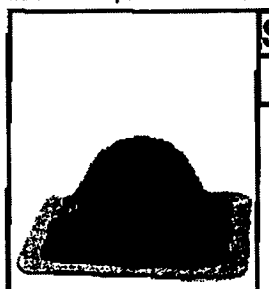

SILICONE DECK-MATE - HIGH TEMPERATURE w/CLAMP

NEW UPC PART NUMBER	DESCRIPTION	QTY/ CTN	LIST PRICE PER UNIT
82016	SDM#1 1/4" - 2"	15	$ 23.50
82026	SDM#2 1" - 3-1/4"	15	$ 26.90
82036	SDM#3 1/4" - 4"	15	$ 36.00
82040	SDM#4 3" - 6"	10	$ 69.75
82050	SDM#5 4" - 7"	10	$ 79.50
82060	SDM#6 5" - 9"	10	$ 92.90
82070	SDM#7 6" - 11"	10	$ 134.10
82085	SDM#8 7" - 13"	5	$ 204.75
82091	SDM#0 10" - 18"	1	$ 316.60
82101	SDM#0 13" - 26"	1	$ 588.65

ALUMI-FLASH SYSTEM

Alumi-Flash- for one to four penetrations in one watertight unit. Alumi-Flash makes pitch pans obsolete! Portals Plus Alumi-Flash consists of a flexible EPDM cap w/Stainless Snaplock Clamp(s) and a one piece, spun aluminum base. The flexible EPDM cap eliminates roof leaks because penetrations can expand, contract, and vibrate independently of the roofing system. There are five different cap styles available which can accommodate a variety of round pipes, tubes, and conduits from 3/8" round through 12" round, and, with Portals Plus Adapter Rings, angle irons and square tubes, as well. The EPDM cap is mechanically sealed to the Alumi-Flash base by a double "Weather-Tite Pressure Seal", which consists of two beads formed into the collar of the base that mate with double grooves molded into the inside of the cap. The Portals Plus Alumi-Flash provides a permanent, watertight, and maintenance-free means for penetrating roofs that is simple and easy to install. Adapter Rings can modify these penetrations

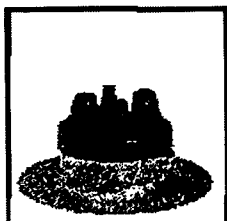

ALUMI-FLASH EW w/ PRIMED FLANGE

NEW UPC PART NUMBER	DESCRIPTION	QTY/ CTN	LIST PRICE PER UNIT
22215	w/ 126 BLACK CAP (1 - 2" to 6" pipe)	5	$ 83.00
22225	w/ 212 BLACK CAP (2 - .375" to 1 & 2 - 1" - 2" pipes)		
22235	w/ 412 BLACK CAP (4 - 1" to 2" pipes)		
22245	w/ 481 BLACK CAP (4 - .375" to 1" pipes)		
22265	w/ 126 WHITE CAP (1 - 2" to 6" pipe)	5	$ 84.00
22275	w/ 212 WHITE CAP (2 - .375" to 1 & 2 - 1" - 2" pipes)		

ALUMI-FLASH SYSTEM

Alumi-Flash- for one to four penetrations in one watertight unit. Alumi-Flash makes pitch pans obsolete! Portals Plus Alumi-Flash consists of a flexible EPDM cap w/Stainless Snaplock Clamp(s) and a one piece, spun aluminum base. The flexible EPDM cap eliminates roof leaks because penetrations can expand, contract, and vibrate independently of the roofing system. There are five different cap styles available which can accommodate a variety of round pipes, tubes, and conduits from 3/8" round through 12" round, and, with Portals Plus Adapter Rings, angle irons and square tubes, as well. The EPDM

ALP00445

cap is mechanically sealed to the Alumi-Flash base by a double "Weather-Tite Pressure Seal", which consists of two beads formed into the collar of the base that mate with double grooves molded into the inside of the cap. The Portals Plus Alumi-Flash provides a permanent, watertight, and maintenance-free means for penetrating roofs that is simple and easy to install. Adapter Rings can modify these penetrations

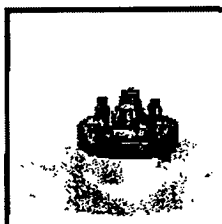

ALUMI-FLASH EW

NEW UPC PART NUMBER	DESCRIPTION	QTY/CTN	LIST PRICE PER UNIT
23015 23025 23035 23045	w/ 126 BLACK CAP (1 - 2" to 6" pipe) w/ 212 BLACK CAP (2 - .375" to 1 & 2 - 1" - 2" pipes) w/ 412 BLACK CAP (4 - 1" to 2" pipes) w/ 481 BLACK CAP (4 - .375" to 1" pipes)	5	$ 70.50
23055 23065	w/ 126 WHITE CAP (1 - 2" to 6" pipe) w/ 212 WHITE CAP (2 - .375" to 1 & 2 - 1" - 2" pipes)	5	$ 71.50

SHINGLE FLASHING SYSTEMS

Shingle Flashings- for effectively sealing pipe penetrations on shingle roofs. Shingle Flashings provide permanent elastic seals at pipe penetrations from 1- 1/4" to 4" round on all shingle roofing systems up to a 40 degree slope. Portals Plus Shingle Flashings consist of an elastomeric collar locked into a nailable rigid base which integrates into the shingle roofing system. Also available is an all elastomeric one piece Shingle Flashing which can accommodate roof slopes up to 45 degrees. Shingle Flashings are the solution to temporary, leaky field- fabricated sheet metal and roof cement flashings.

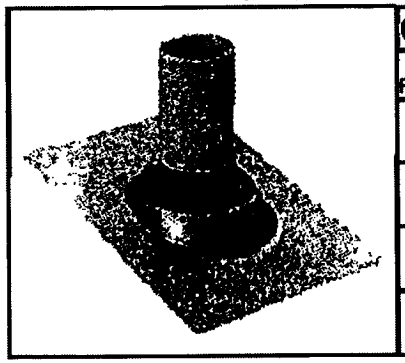

GALVANIZED

NEW UPC PART NUMBER	SIZE	DESCRIPTION	LIST PRICE PER UNIT
85009	1.25" - 1.50"	GALVANIZED FLASHING BASE w/ elastomeric collar	$ 5.46
85019	2"	GALVANIZED FLASHING BASE w/ elastomeric collar	$ 5.79
85029	3"	GALVANIZED FLASHING BASE w/ elastomeric collar	$ 6.29
85039	4"	GALVANIZED FLASHING BASE w/ elastomeric collar	$ 8.12

SHINGLE FLASHING SYSTEMS

Shingle Flashings- for effectively sealing pipe penetrations on shingle roofs. Shingle Flashings provide permanent elastic seals at pipe penetrations from 1- 1/4" to 4" round on all shingle roofing systems up to a 40 degree slope. Portals Plus Shingle Flashings consist of an elastomeric collar locked into a nailable rigid base which integrates into the shingle roofing system. Also available is an all elastomeric one piece Shingle Flashing which can accommodate roof slopes up to 45 degrees. Shingle Flashings are the solution to temporary, leaky field- fabricated sheet metal and roof cement flashings.

ALUMINUM

NEW UPC PART NUMBER	SIZE	DESCRIPTION	LIST PRICE PER UNIT
85209	1.25" - 1.50"	ALUMINUM FLASHING BASE w/ elastomeric collar	$ 6.45

ALP00446

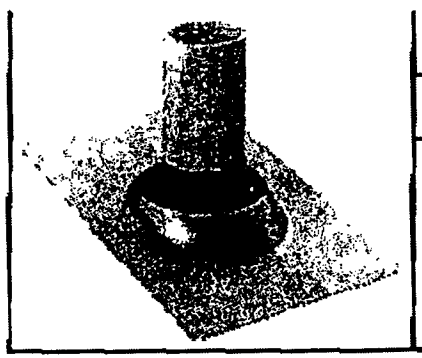

85219	2"	ALUMINUM FLASHING BASE w/ elastomeric collar	$ 6.95
85229	3"	ALUMINUM FLASHING BASE w/ elastomeric collar	$ 7.68
85239	4"	ALUMINUM FLASHING BASE w/ elastomeric collar	$ 9.29

SHINGLE FLASHING SYSTEMS

Shingle Flashings- for effectively sealing pipe penetrations on shingle roofs. Shingle Flashings provide permanent elastic seals at pipe penetrations from 1- 1/4" to 4" round on all shingle roofing systems up to a 40 degree slope. Portals Plus Shingle Flashings consist of an elastomeric collar locked into a nailable rigid base which integrates into the shingle roofing system. Also available is an all elastomeric one piece Shingle Flashing which can accommodate roof slopes up to 45 degrees. Shingle Flashings are the solution to temporary, leaky field- fabricated sheet metal and roof cement flashings.

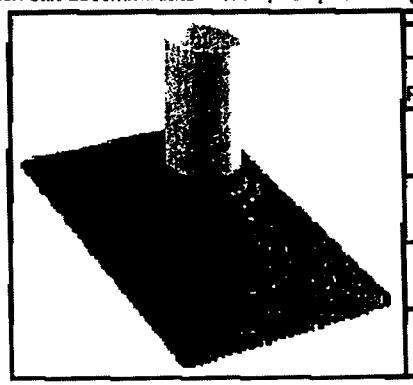

THERMOPLASTIC

NEW UPC PART NUMBER	SIZE	DESCRIPTION	LIST PRICE PER UNIT
85309	1.25" - 1.50"	TERMOPLASTIC FLASHING BASE w/ elastomeric collar	$ 4.36
85319	2"	TERMOPLASTIC FLASHING BASE w/ elastomeric collar	$ 4.48
85329	3"	TERMOPLASTIC FLASHING BASE w/ elastomeric collar	$ 4.59
85339	4"	TERMOPLASTIC FLASHING BASE w/ elastomeric collar	$ 5.16

SHINGLE FLASHING SYSTEMS

Shingle Flashings- for effectively sealing pipe penetrations on shingle roofs. Shingle Flashings provide permanent elastic seals at pipe penetrations from 1- 1/4" to 4" round on all shingle roofing systems up to a 40 degree slope. Portals Plus Shingle Flashings consist of an elastomeric collar locked into a nailable rigid base which integrates into the shingle roofing system. Also available is an all elastomeric one piece Shingle Flashing which can accommodate roof slopes up to 45 degrees. Shingle Flashings are the solution to temporary, leaky field- fabricated sheet metal and roof cement flashings.

ELASTOMERIC

NEW UPC PART NUMBER	SIZE	DESCRIPTION	LIST PRICE PER UNIT
85109	1.25" - 1.50"	ELASTOMERIC FLASHING BASE w/ elastomeric collar	$ 4.92
85119	2"	ELASTOMERIC FLASHING BASE w/ elastomeric collar	$ 5.17
85129	3"	ELASTOMERIC FLASHING BASE w/ elastomeric collar	$ 6.22

ALP00447

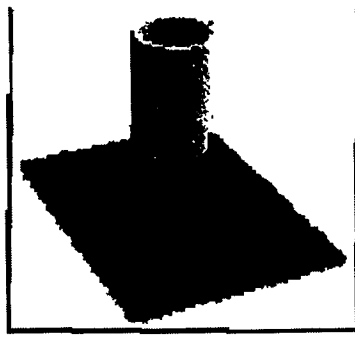	85139	4"	ELASTOMERIC FLASHING BASE w/ elastomeric collar	$ 7.80

ALUMI-FLASH SYSTEM

Alumi-Flash- for one to four penetrations in one watertight unit. Alumi-Flash makes pitch pans obsolete! Portals Plus Alumi-Flash consists of a flexible EPDM cap w/Stainless Snaplock Clamp(s) and a one piece, spun aluminum base. The flexible EPDM cap eliminates roof leaks because penetrations can expand, contract, and vibrate independently of the roofing system. There are five different cap styles available which can accommodate a variety of round pipes, tubes, and conduits from 3/8" round through 12" round, and, with Portals Plus Adapter Rings, angle irons and square tubes, as well. The EPDM cap is mechanically sealed to the Alumi-Flash base by a double "Weather-Tite Pressure Seal", which consists of two beads formed into the collar of the base that mate with double grooves molded into the inside of the cap. The Portals Plus Alumi-Flash provides a permanent, watertight, and maintenance-free means for penetrating roofs that is simple and easy to install. Adapter Rings can modify these penetrations

ALUMI-FLASH XT

NEW UPC PART NUMBER	DESCRIPTION	QTY/ CTN	LIST PRICE PER UNIT
24015 24025 24035 24045	w/ 126 BLACK CAP (1 - 2" to 6" pipe) w/ 212 BLACK CAP (2 - .375" to 1 & 2 - 1" - 2" pipes) w/ 412 BLACK CAP (4 - 1" to 2" pipes) w/ 481 BLACK CAP (4 - .375" to 1" pipes)	4	$ 115.50
24065 24075	w/ 126 WHITE CAP (1 - 2" to 6" pipe) w/ 212 WHITE CAP (2 - .375" to 1 & 2 - 1" - 2" pipes)	4	$ 118.00

SHINGLE FLASHING SYSTEMS

Shingle Flashings- for effectively sealing pipe penetrations on shingle roofs. Multi Fit Shingle Flashings provide permanent elastic seals at pipe penetrations from 1-1/2" to 4" round on all shingle roofing systems up to a 40 degree slope. Portals Plus Multi Fit Shingle Flashings consist of an elastomeric collar locked into a nailable rigid base which integrates into the shingle roofing system. Multi Fit Shingle Flashings are the solution to temporary, leaky field- fabricated sheet metal and roof cement flashings.

GALVANIZED MULTI FIT

NEW UPC PART NUMBER	SIZE	DESCRIPTION	LIST PRICE PER UNIT
85049	1.50" - 2" - 3"	GALVANIZED FLASHING BASE w/ elastomeric collar	$ 5.77

ALP00448

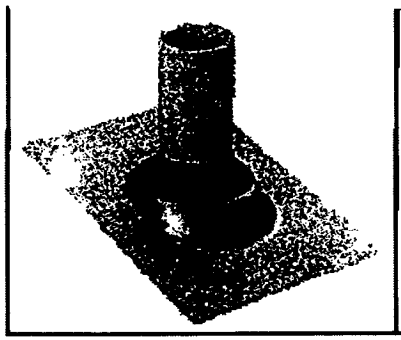	85059	3" - 4"	GALVANIZED FLASHING BASE w/ elastomeric collar	$ 5.77

SHINGLE FLASHING SYSTEMS

Shingle Flashings- for effectively sealing pipe penetrations on shingle roofs. Multi Fit Shingle Flashings provide permanent elastic seals at pipe penetrations from 1- 1/4" to 4" round on all shingle roofing systems up to a 40 degree slope. Portals Plus Multi Fit Shingle Flashings consist of an elastomeric collar locked into a nailable rigid base which integrates into the shingle roofing system. Multi Fit Shingle Flashings are the solution to temporary, leaky field- fabricated sheet metal and roof cement flashings.

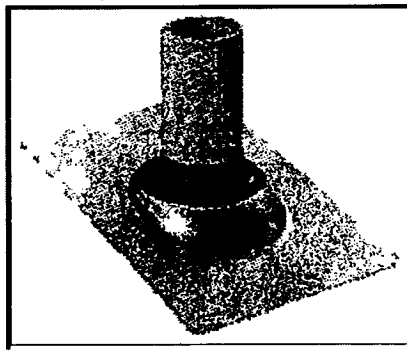

ALUMINUM MULTI FIT

NEW UPC PART NUMBER	SIZE	DESCRIPTION	LIST PRICE PER UNIT
85249	1.50" - 2" - 3"	ALUMINUM FLASHING BASE w/ elastomeric collar	$ 7.17
85259	3" - 4"	ALUMINUM FLASHING BASE w/ elastomeric collar	$ 7.17

SHINGLE FLASHING SYSTEMS

Shingle Flashings- for effectively sealing pipe penetrations on shingle roofs. Multi Fit Shingle Flashings provide permanent elastic seals at pipe penetrations from 1- 1/4" to 4" round on all shingle roofing systems up to a 40 degree slope. Portals Plus Multi Fit Shingle Flashings consist of an elastomeric collar locked into a nailable rigid base which integrates into the shingle roofing system. Multi Fit Shingle Flashings are the solution to temporary, leaky field- fabricated sheet metal and roof cement flashings.

THERMOPLASTIC MULTI FIT

ALP00449

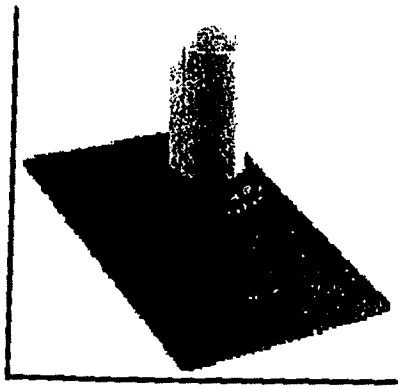

NEW UPC PART NUMBER	SIZE	DESCRIPTION	LIST PRICE PER UNIT
85349	1.50" - 2" - 3"	TERMOPLASTIC FLASHING BASE w/ elastomeric collar	$ 4.70
85359	3" - 4"	TERMOPLASTIC FLASHING BASE w/ elastomeric collar	$ 4.70

PLASTI-FLASH SYSTEM

Plasti-Flash- for one to four penetrations in one watertight unit. Plasti-Flash makes pitch pans obsolete! Portals Plus Plasti- Flash consists of a flexible EPDM cap w/Stainless Snaplock Clamp(s) and a one piece, weldable white PVC base. The flexible white EPDM cap eliminates roof leaks because penetrations can expand, contract, and vibrate independently of the roofing system. There are two different cap styles available which can accommodate a variety of round pipes, tubes, and conduits from 3/8" round through 6" round, and, with Portals Plus black Adapter Rings, angle irons and square tubes, as well. The white EPDM cap is mechanically sealed to the Plasti-Flash base by a double "Weather-Tite Pressure Seal", which consists of two beads formed into the collar of the base that mate with double grooves molded into the inside of the cap. The Portals Plus Plasti-Flash provides a permanent, watertight, and maintenance-free means for penetrating roofs that is simple and easy to install. Adapter Rings can modify these penetrations

PLASTI-FLASH				
NEW UPC PART NUMBER	OLD PART PART NUMBER	DESCRIPTION	QTY/CTN	LIST PRICE PER UNIT
26015 26025	PF104 PF102	w/ 126 BLACK CAP (1 - 2" to 6" pipe) w/ 212 BLACK CAP (2 - .375" to 1 & 2 - 1" - 2" pipes)	5	$ 57.00
26035	PF500	RETROFIT PLASTI-FLASH w/ SC36 RETROFIT BLACK CAP	5	$ 110.00

SINGLE PIPE PORTAL SYSTEM

Pipe Portal System - for one to eight penetrations in one watertight unit. The Pipe Portal System is a versatile, leak proof, and weathertight solution to routing pipes through a roof. The Pipe Portal System is designed to allow both horizontal and vertical pipe movement, yet provide a maintenance-free permanent installation which accommodates penetrations from 3/8" round through 12" round, and, with Portals Plus Adapter Rings, angle irons and square tubes, as well. Compression molded EPDM rubber caps provide the flexible seal at each penetration. Stainless Snaplock Clamps provide an added measure of assurance at each penetration. The flexible EPDM caps are mechanically sealed to the Pipe Portal cover by a double "Weather-Tite Pressure Seal", which consists of two beads formed into the collar of the cover that mate with double grooves molded into the inside of the cap. The curb cover is molded of one piece ultraviolet-resistant ABS plastic and laminated with an acrylic coating for extra protection. This manufacturing process creates exposed materials that are both ozone and ultraviolet resistant with a serviceable temperature range of -40F to +160F. To complete the system, the roof curb is fabricated from heavy 18 gauge galvanized iron with mitered and welded corners and insulated on all four sides. The Pipe Portal System allows roofing membranes and base flashings to be installed in accordance with the National Roofing Contractors Association (NRCA) recommendations.

PIPE PORTAL® (Cover, Black Cap & Clamps) RC-2A	

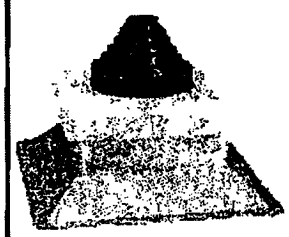

NEW UPC PART NUMBER	DESCRIPTION	QTY/CTN	LIST PRICE PER UNIT
32005 32015 32025 32035	w/ 126 BLACK CAP (1 - 2" to 6" pipe) w/ 212 BLACK CAP (2 - .375" to 1 & 2 - 1" - 2" pipes) w/ 412 BLACK CAP (4 - 1" to 2" pipes) w/ 481 BLACK CAP (4 - .375" to 1" pipes)	5	$ 79.00
32041	w/ 182 BLACK CAP (1 - 8" to 12" pipe)	1	$ 126.00
32055 32065	w/ 126 WHITE CAP (1 - 2" to 6" pipe) w/ 212 WHITE CAP (2 - .375" to 1 & 2 - 1" - 2" pipes)	5	$ 80.00
32101	SMALL RC-2A STRAIGHT SIDED CURB - 11" High	1	$ 83.00
32131	LARGE RC-2A STRAIGHT SIDED CURB - 11" High	1	$ 159.00

See more information about the caps.

PORTALS PLUS *484 N. Thomas Drive, Bensenville, IL 60106* *TEL: (630) 595-7320 FAX: (630) 766-5259*

PIPE BOOTS

Pipe Flashings (boots)- for economical flashings of single ply roofing systems. Pipe Boots (or witches' hats) are economical flashings designed for single pipe penetrations through single ply roofs. Virtually any common pipe size can be accommodated with one of these boots. The conically shaped steps of the Portals Plus Pipe Boots will securely seal all pipes and its large double thick molded rib at the top of each step offers superior tear resistance and reinforcement, as well as a cutting guide for installation. The Portls Plus Stainless Snaplock Clamp maximizes the secure seal at the penetration. Utilizing the Pipe Boots eliminates workmanship errors in field fabrication and makes flashing pipes a clean, consistent approach. Portals Plus Adapter Rings can be used to seal very small pipes, as well as unusual shapes such as angle irons and square tubes.

Other Flashing Systems: Pipe Portals, Double Pipe Portals, Alumi-Flash

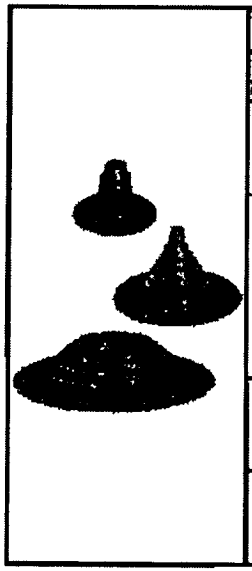

PIPE BOOTS (w/ CLAMPS)

NEW UPC PART NUMBER	DESCRIPTION	QTY/CTN	LIST PRICE PER UNIT
42100	SMALL - BLACK EPDM	10	$ 16.80
42130	SMALL - WHITE EPDM	10	$ 18.00
44130	SMALL - WHITE HYPALON*	10	$ 19.20
42110	MEDIUM - BLACK EPDM	10	$ 22.00
42140	MEDIUM - WHITE EPDM	10	$ 26.50
43170	MEDIUM - BLACK NEOPRENE	10	$ 33.20
44170	MEDIUM - WHITE HYPALON*	10	$ 28.00
46209	MEDIUM - WHITE TPO**	8	$ CF.00
48009	MEDIUM - WHITE PVC**	8	$ CF.00
42121	LARGE - BLACK EPDM	5	$ 78.00
42151	LARGE - WHITE EPDM	5	$ 80.00
43181	LARGE - BLACK NEOPRENE	5	$ 110.00
45000	QUADRASEAL 212R - BLACK EPDM	10	$ 32.00
45010	QUADRASEAL 412R - BLACK EPDM	10	$ 32.00
45020	QUADRASEAL 481R - BLACK EPDM	10	$ 32.00

* - AVAILABLE ON A LIMITED BASIS

** - ALL COLORS AVAILABLE (call Portals Plus)

$CF.00 - CONSULT FACTORY

PIPE BOOTS

Pipe Flashings (boots)- for economical flashings of single ply roofing systems. Pipe Boots (or witches' hats) are economical flashings designed for single pipe penetrations through single ply roofs. Virtually any common pipe size can be accommodated with one of these boots. The conically shaped steps of the Portals Plus Pipe Boots will securely seal all pipes and its large double thick molded rib at the top of each step offers superior tear resistance and reinforcement, as well as a cutting guide for installation. The Portls Plus Stainless Snaplock Clamp maximizes the secure seal at the penetration. Utilizing the Pipe Boots eliminates workmanship errors in field fabrication and makes flashing pipes a clean, consistent approach. Portals Plus Adapter Rings can be used to seal very small pipes, as well as unusual shapes such as angle irons and square tubes.

Other Flashing Systems: Pipe Portals, Double Pipe Portals, Alumi-Flash

PIPE BOOTS (w/ ADHESIVE TAPE)

NEW UPC PART NUMBER	DESCRIPTION	QTY/CTN	LIST PRICE PER UNIT

ALP00452

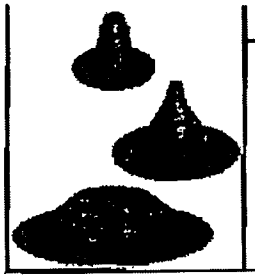

42500	SMALL - BLACK EPDM	10	$ 22.60
42510	MEDIUM - BLACK EPDM	10	$ 32.60
43570	MEDIUM - BLACK NEOPRENE	10	$ 43.60

ALP00453

Pipe Flashings

Technical Product Information

Flashings for all size penetrations for single ply roofs

Small Pipe Boot

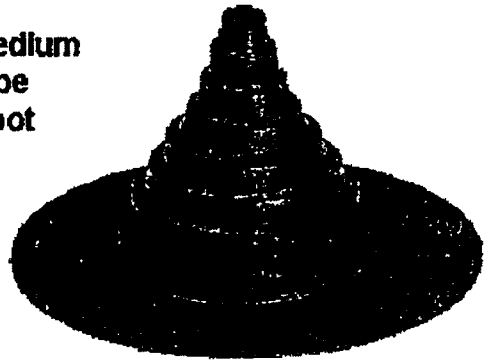

Medium Pipe Boot

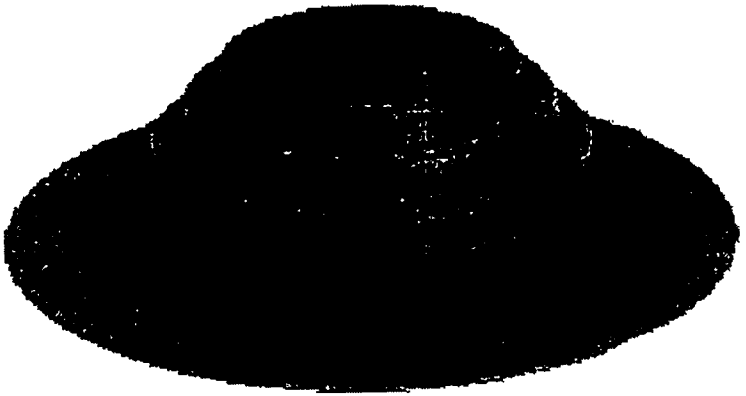

Large Pipe Boot

ALP00454

Quadraseal Pipe Boot

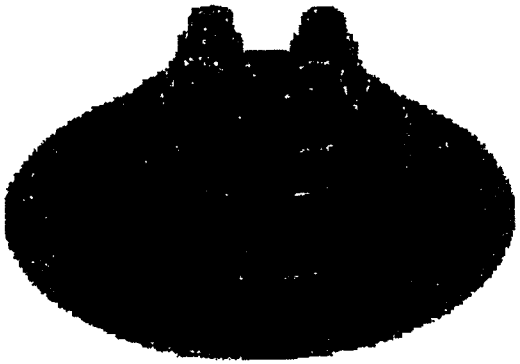

The "Pipe Boot" is an economical flashing designed for single pipe penetrations on single ply rubber roofs. The unit will accomodate virtually all pipe sizes: 1.75" and 2.75" on Small Pipe Boot, 1" through 6" on Medium Pipe Boot and 8" through 12" on Large Pipe Boot. Pipe Boots are available in EPDM, Neoprene, Hypalon, TPO, or PVC material. The Quadraseal is designed to allow as many as four pipes up to 2" in diameter to pass through one flashing. Quadraseals are available in EPDM material only. The conically shaped steps of the Portals Plus pipe flashing will securely seal all pipes and the large double thick molded rib at the top of each step offers supreme tear resistance and reinforcement, as well as a cutting guide. Utilizing the Pipe Flashings eliminates the workmanship error in field fabrication and makes flashing pipes a clean, consistent approach.

Adapters available for round, square tube, and angle iron available to fit most pipe boots.

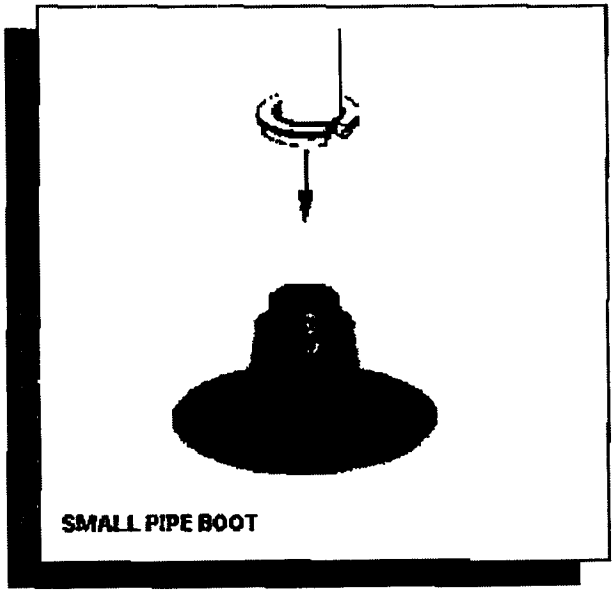

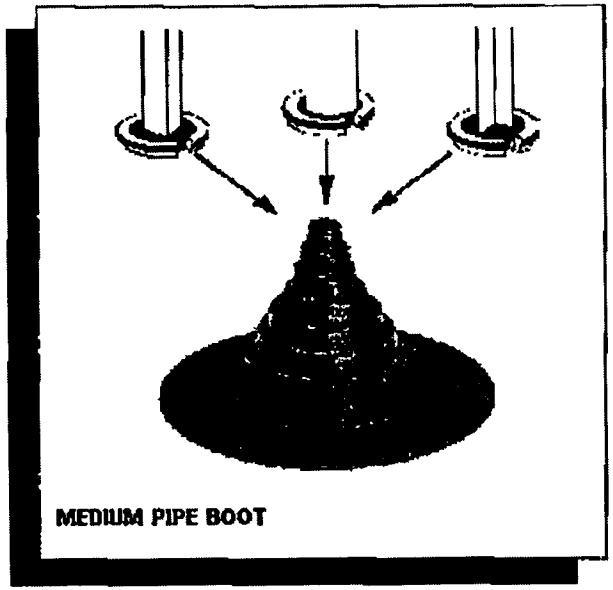

ALP00455

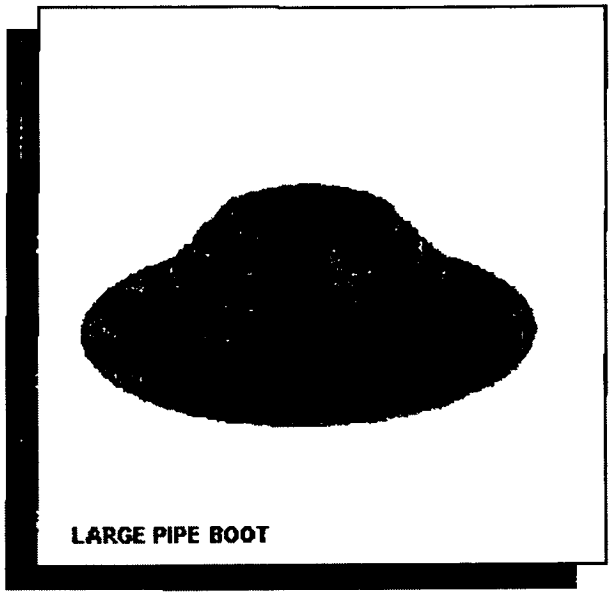

LARGE PIPE BOOT

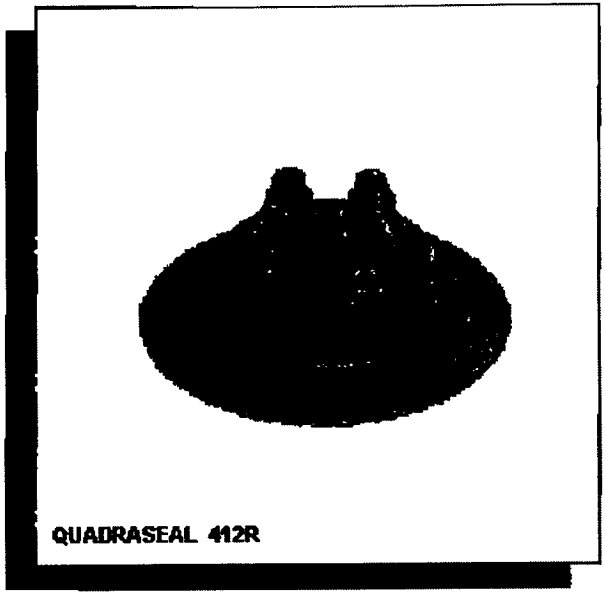

QUADRASEAL 412R

NEW UPC PART NUMBER	DESCRIPTION	QTY/CTN	LIST PRICE PER UNIT
42100	SMALL - BLACK EPDM	10	$ 16.80
42130	SMALL - WHITE EPDM	10	$ 18.00
44130	SMALL - WHITE HYPALON*	10	$ 19.20
42110	MEDIUM - BLACK EPDM	10	$ 22.00
42140	MEDIUM - WHITE EPDM	10	$ 26.50
43170	MEDIUM - BLACK NEOPRENE	10	$ 33.20
44170	MEDIUM - WHITE HYPALON*	10	$ 28.00
OEM	MEDIUM - WHITE TPO**	8	$ CF.00
OEM	MEDIUM - WHITE PVC**	8	$ CF.00
42121	LARGE - BLACK EPDM	5	$ 78.00
42151	LARGE - WHITE EPDM	5	$ 80.00
43181	LARGE - WHITE NEOPRENE	5	$ 110.00

** - ALL COLORS AVAILABLE FOR TPO & PVC (call Portals Plus)
CF - DENOTES CALL FACTORY

Quadraseals
Adapter Rings

Other Flashing Systems:
Pipe Portals

ALP00456

PORTALS PLUS 484 N. Thomas Drive, Bensenville, IL 60106 TEL: (630) 595-7320 FAX: (630) 766-5253

All information is subject to change without notice. Dimensions and specifications shown are within manufacturing tolerances.
© Copyright Commercial Products Group of Hart & Cooley, Inc., May, 2006. All Rights Reserved.

ALP00457

RPS ACCESSORIES

84 N. Thomas Dr.
ensenville, IL 60106
30) 595-7320

2-5 Day Lead Time With No Premium!

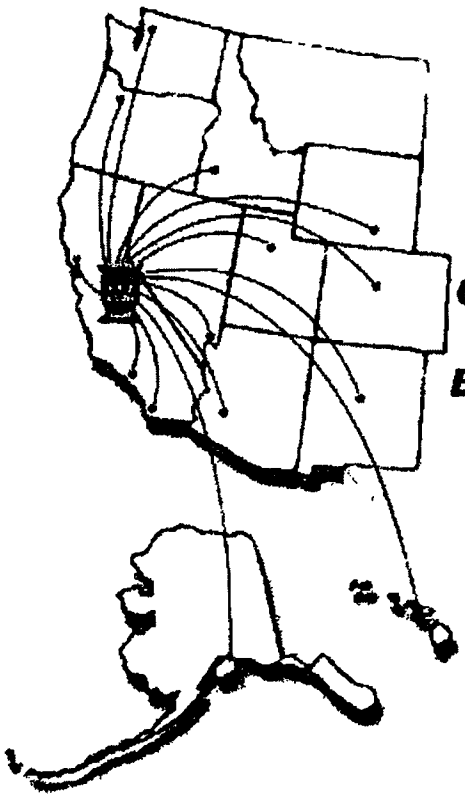

CLICK TO ENTER

NOW MANUFACTURING IN SANGER, CALIFORNIA

ALSO SEE OUR OTHER ROOFTOP ACCESSORIES FOR COMPLETE ROOFTOP SOLUTIONS !

MILCOR

Roof Access Hatches and Heat & Smoke Vents

POWELS

Flashings, Drains, ReRoof Drains, Expansion Joint Covers, and Vents

Commercial Products Group 484 N. Thomas Drive, Bensenville, IL 60106
TEL: 630-595-7320 FAX: 630-766-5259

ALP00458

MILCOR

The Milcor Family of Companies

Milcor specializes in manufacturing Heat & Smoke vents, Roof Access Hatches, and Access Doors available nationwide through a network of local stocking wholesale distributors.

Portals Plus specializes in stock rooftop accessory products for the roofing, HVACR, and plumbing trades. All Portals Plus products are available nationwide through a network of local stocking wholesale distributors.

Roof Products & Systems (RPS) specializes in custom manufactured roof curbs and supports for HVACR. All RPS products are available nationwide through a network of local representatives.

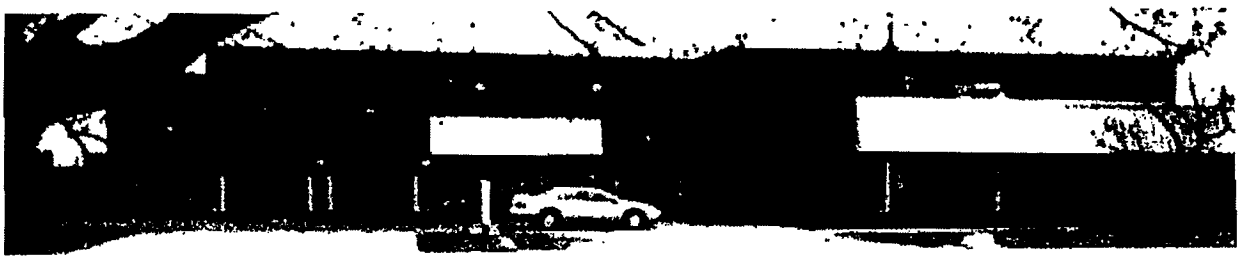

ALP00460

ALSO SEE OUR OTHER ROOFTOP ACCESSORIES FOR COMPLETE ROOFTOP SOLUTIONS !

PORTALS PLUS

MILCOR

Roof Access Hatches and Heat & Smoke Vents

Custom-manufactured Curbs, Equipment Supports, and Pipe & Duct Supports

- Product Search
- Specification Wizard
- CAD Details
- Continuing Education
- Product Information
- Part Number Search
- Installation
- Warranty
- Submittal Sheets
- Contacts

Portals Plus manufactures solutions for roof leak problems. Roof leaks are the biggest problem of architects and building owners. 85% of all roof leaks occur at penetrations and corners due to poor details which fail to accommodate movement. Extreme roof temperature swings require durable and flexible flashings. However, high labor costs and low common denominator standards create conditions for poor workmanship and non-functional field fabricated flashings. A "good enough" attitude creates temporary expedients, such as pitch pockets or pans and their derivatives, but at the building owner's ongoing expense. The National Roofing Contractors Association (NRCA) states that "Pitch pockets or pans by their design, are not intended to be continuously watertight. Their use should not be encouraged since better methods are available to accomplish the same end. Pitch pans or pockets require frequent inspection and maintenance, and usually a great deal of damage can occur before the leak around a pitch pocket or pan is evident."

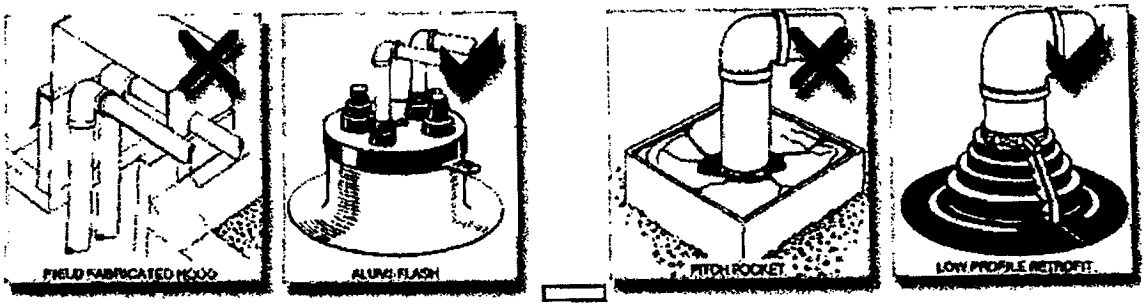

ALP00461

Portals Plus has been manufacturing its unique products since 1977 in state-of-the-art manufacturing facilities in the Chicago suburbs.

ortals Plus products are readily available across the USA and Canada through a network of local ocking wholesale distributors. Call 800-624-8642 or 630-595-7320 for the stocking distributor near you · for international availability.

Commercial Products Group 484 N. Thomas Drive, Bensenville, IL 60106
TEL 630-595-7320 FAX 630-766-5259
portalsplus@portalsplus.com

ALP00462

Product Selection

SINGLE PIPE PORTAL SYSTEM

Pipe Portal System - for one to eight penetrations in one watertight unit. The Pipe Portal System is a versatile, leak proof, and weathertight solution o routing pipes through a roof. The Pipe Portal System is designed to allow both horizontal and vertical pipe movement, yet provide a maintenance-free permanent installation which accommodates penetrations from 3/8" round through 12" round, and, with Portals Plus Adapter Rings, angle irons and square tubes, as well. Compression molded EPDM rubber caps provide the flexible seal at each penetration. Stainless Snaplock Clamps provide an added measure of assurance at each penetration. The flexible EPDM caps are mechanically sealed to the Pipe Portal cover by a double "Weather-Tite Pressure Seal", which consists of two beads formed into the collar of the cover that mate with double grooves molded into the inside of the cap. The curb cover is molded of one piece ultraviolet-resistant ABS plastic and laminated with an acrylic coating for extra protection. This manufacturing process creates exposed materials that are both ozone and ultraviolet resistant with a serviceable temperature range of -40F to +160F. To complete the system, the roof curb is fabricated from heavy 18 gauge galvanized iron with mitered and welded corners and insulated on all four sides. The Pipe Portal System allows roofing membranes and base flashings to be installed in accordance with the National Roofing Contractors Association (NRCA) recommendations.

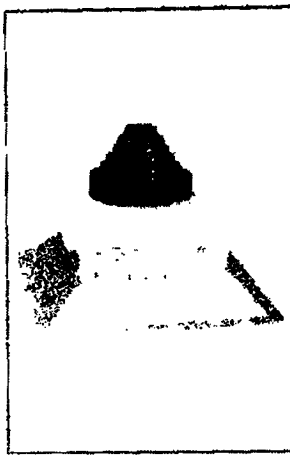

PIPE PORTAL® (Cover, Black Cap & Clamps) RC-3A

NEW UPC PART NUMBER	DESCRIPTION	QTY/CTN	LIST PRICE PER UNIT
32005 32015 32025 32035	w/ 126 BLACK CAP (1 - 2" to 6" pipe) w/ 212 BLACK CAP (2 - .375" to 1 & 2 - 1" - 2" pipes) w/ 412 BLACK CAP (4 - 1" to 2" pipes) w/ 481 BLACK CAP (4 - .375" to 1" pipes)	5	$ 96.80
32041	w/ 182 BLACK CAP (1 - 8" to 12" pipe)	1	$ 154.40
32055 32065	w/ 126 WHITE CAP (1 - 2" to 6" pipe) w/ 212 WHITE CAP (2 - .375" to 1 & 2 - 1" - 2" pipes)	5	$ 98.00
32111	SMALL RC-3A CANTED CURB - 8" High	1	$ 104.00
32141	LARGE RC-3A CANTED CURB - 8" High	1	$ 199.00

See more information about the caps.

SINGLE PIPE PORTAL SYSTEM

Pipe Portal System - for one to eight penetrations in one watertight unit. The Pipe Portal System is a versatile, leak proof, and weathertight solution to routing pipes through a roof. The Pipe Portal System is designed to allow both horizontal and vertical pipe movement, yet provide a maintenance-free permanent installation which accommodates penetrations from 3/8" round through 12" round, and, with Portals Plus Adapter Rings, angle irons and square tubes, as well. Compression molded EPDM rubber caps provide the flexible seal at each penetration. Stainless Snaplock Clamps provide an added measure of assurance at each penetration. The flexible EPDM caps are mechanically sealed to the Pipe Portal cover by a double "Weather-Tite Pressure Seal", which consists of two beads formed into the collar of the cover that mate with double grooves molded into the inside of the cap. The curb cover is molded of one piece ultraviolet-resistant ABS plastic and laminated with an acrylic coating for extra protection. This manufacturing process creates exposed materials that are both ozone and ultraviolet resistant with a serviceable temperature range of -40F to +160F. To complete the system, the roof curb is fabricated from heavy 18 gauge galvanized iron with mitered and welded corners and insulated on all four sides. The Pipe Portal System allows roofing membranes and base flashings to be installed in accordance with the National Roofing Contractors Association (NRCA) recommendations.

PIPE PORTAL® (Cover, Black Cap & Clamps) RC-4A

NEW UPC PART NUMBER	DESCRIPTION	QTY/CTN	LIST PRICE PER UNIT
32005 32015 32025 32035	w/ 126 BLACK CAP (1 - 2" to 6" pipe) w/ 212 BLACK CAP (2 - .375" to 1 & 2 - 1" - 2" pipes) w/ 412 BLACK CAP (4 - 1" to 2" pipes) w/ 481 BLACK CAP (4 - .375" to 1" pipes)	5	$ 96.80
32041	w/ 182 BLACK CAP (1 - 8" to 12" pipe)	1	$ 154.40
32055 32065	w/ 126 WHITE CAP (1 - 2" to 6" pipe) w/ 212 WHITE CAP (2 - .375" to 1 & 2 - 1" - 2" pipes)	5	$ 98.00
32121	SMALL RC-4A RAISED CANTED CURB -9 1/2" High	1	$ 104.00

	32151	LARGE RC-4A RAISED CANTED CURB -9 1/2" High	1	$ 199.00

)OUBLE PIPE PORTAL SYSTEM

ipe Portal System - for one to eight penetrations in one watertight unit. The Pipe Portal System is a versatile, leak proof, and weathertight solution routing pipes through a roof. The Pipe Portal System is designed to allow both horizontal and vertical pipe movement, yet provide a aintenance-free permanent installation which accommodates penetrations from 3/8" round through 12" round, and, with Portals Plus Adapter ings, angle irons and square tubes, as well. Compression molded EPDM rubber caps provide the flexible seal at each penetration. Stainless naplock Clamps provide an added measure of assurance at each penetration. The flexible EPDM caps are mechanically sealed to the Pipe ortal cover by a double "Weather-Tite Pressure Seal", which consists of two beads formed into the collar of the cover that mate with double ooves molded into the inside of the cap. The curb cover is molded of one piece ultraviolet-resistant ABS plastic and laminated with an acrylic oating for extra protection. This manufacturing process creates exposed materials that are both ozone and ultraviolet resistant with a serviceable mperature range of -40F to +160F. To complete the system, the roof curb is fabricated from heavy 18 gauge galvanized iron with mitered and elded corners and insulated on all four sides. The Pipe Portal System allows roofing membranes and base flashings to be installed in accordance ith the National Roofing Contractors Association (NRCA) recommendations.

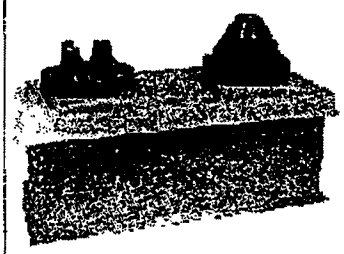

DOUBLE PIPE PORTAL® (Cover, Cap & Clamps) RC-2A

NEW UPC PART NUMBER	DESCRIPTION	QTY/CTN	LIST PRICE PER UNIT
36002	DOUBLE COVER & CAPS w/126 & 212 BLACK CAP	2	$ 293.00
36012	DOUBLE COVER & CAPS w/126 & 412 BLACK CAP		
36022	DOUBLE COVER & CAPS w/126 & 481 BLACK CAP		
36032	DOUBLE COVER & CAPS w/126 & 126 BLACK CAP		
36042	DOUBLE COVER & CAPS w/212 & 212 BLACK CAP		
36052	DOUBLE COVER & CAPS w/212 & 412 BLACK CAP		
36062	DOUBLE COVER & CAPS w/212 & 481 BLACK CAP		
36092	DOUBLE COVER & CAPS w/412 & 412 BLACK CAP		
36102	DOUBLE COVER & CAPS w/412 & 481 BLACK CAP		
36142	DOUBLE COVER & CAPS w/481 & 481 BLACK CAP		
32161	DOUBLE RC-2A STRAIGHT SIDED CURB -11" High	1	$ 220.00

See more information about the caps.

)OUBLE PIPE PORTAL SYSTEM

ipe Portal System - for one to eight penetrations in one watertight unit. The Pipe Portal System is a versatile, leak proof, and weathertight solution routing pipes through a roof. The Pipe Portal System is designed to allow both horizontal and vertical pipe movement, yet provide a aintenance-free permanent installation which accommodates penetrations from 3/8" round through 12" round, and, with Portals Plus Adapter ings, angle irons and square tubes, as well. Compression molded EPDM rubber caps provide the flexible seal at each penetration. Stainless naplock Clamps provide an added measure of assurance at each penetration. The flexible EPDM caps are mechanically sealed to the Pipe ortal cover by a double "Weather-Tite Pressure Seal", which consists of two beads formed into the collar of the cover that mate with double ooves molded into the inside of the cap. The curb cover is molded of one piece ultraviolet-resistant ABS plastic and laminated with an acrylic oating for extra protection. This manufacturing process creates exposed materials that are both ozone and ultraviolet resistant with a serviceable mperature range of -40F to +160F. To complete the system, the roof curb is fabricated from heavy 18 gauge galvanized iron with mitered and elded corners and insulated on all four sides. The Pipe Portal System allows roofing membranes and base flashings to be installed in accordance ith the National Roofing Contractors Association (NRCA) recommendations.

DOUBLE PIPE PORTAL® (Cover, Cap & Clamps) RC-3A

NEW UPC PART NUMBER	DESCRIPTION	QTY/CTN	LIST PRICE PER UNIT

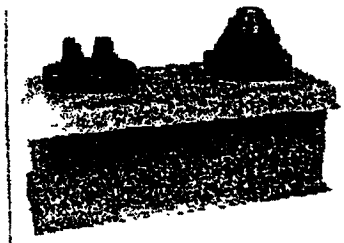

36002 36012 36022 36032 36042 36052 36062 36092 36102 36142	DOUBLE COVER & CAPS w/126 & 212 BLACK CAP DOUBLE COVER & CAPS w/126 & 412 BLACK CAP DOUBLE COVER & CAPS w/126 & 481 BLACK CAP DOUBLE COVER & CAPS w/126 & 126 BLACK CAP DOUBLE COVER & CAPS w/212 & 212 BLACK CAP DOUBLE COVER & CAPS w/212 & 412 BLACK CAP DOUBLE COVER & CAPS w/212 & 481 BLACK CAP DOUBLE COVER & CAPS w/412 & 412 BLACK CAP DOUBLE COVER & CAPS w/412 & 481 BLACK CAP DOUBLE COVER & CAPS w/481 & 481 BLACK CAP	2	$ 293.00
32171	DOUBLE RC-3A CANTED CURB - 8" High	1	$ 220.00

See more information about the caps.

DOUBLE PIPE PORTAL SYSTEM

Pipe Portal System - for one to eight penetrations in one watertight unit. The Pipe Portal System is a versatile, leak proof, and weathertight solution to routing pipes through a roof. The Pipe Portal System is designed to allow both horizontal and vertical pipe movement, yet provide a maintenance-free permanent installation which accommodates penetrations from 3/8" round through 12" round, and, with Portals Plus Adapter Rings, angle irons and square tubes, as well. Compression molded EPDM rubber caps provide the flexible seal at each penetration. Stainless Snaplock Clamps provide an added measure of assurance at each penetration. The flexible EPDM caps are mechanically sealed to the Pipe Portal cover by a double "Weather-Tite Pressure Seal", which consists of two beads formed into the collar of the cover that mate with double grooves molded into the inside of the cap. The curb cover is molded of one piece ultraviolet-resistant ABS plastic and laminated with an acrylic coating for extra protection. This manufacturing process creates exposed materials that are both ozone and ultraviolet resistant with a serviceable temperature range of -40F to +160F. To complete the system, the roof curb is fabricated from heavy 18 gauge galvanized iron with mitered and welded corners and insulated on all four sides. The Pipe Portal System allows roofing membranes and base flashings to be installed in accordance with the National Roofing Contractors Association (NRCA) recommendations.

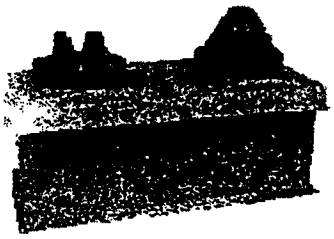

DOUBLE PIPE PORTAL® (Cover, Cap & Clamps) RC-4A

NEW UPC PART NUMBER	DESCRIPTION	QTY/CTN	LIST PRICE PER UNIT
36002 36012 36022 36032 36042 36052 36062 36092 36102 36142	DOUBLE COVER & CAPS w/126 & 212 BLACK CAP DOUBLE COVER & CAPS w/126 & 412 BLACK CAP DOUBLE COVER & CAPS w/126 & 481 BLACK CAP DOUBLE COVER & CAPS w/126 & 126 BLACK CAP DOUBLE COVER & CAPS w/212 & 212 BLACK CAP DOUBLE COVER & CAPS w/212 & 412 BLACK CAP DOUBLE COVER & CAPS w/212 & 481 BLACK CAP DOUBLE COVER & CAPS w/412 & 412 BLACK CAP DOUBLE COVER & CAPS w/412 & 481 BLACK CAP DOUBLE COVER & CAPS w/481 & 481 BLACK CAP	2	$ 293.00
32181	DOUBLE RC-4A RAISED CANTED CURB -9 1/2" High	1	$ 220.00

See more information about the caps.

PIPE BOOTS

ipe Flashings (boots)- for economical flashings of single ply roofing systems. Pipe Boots (or witches' hats) are economical flashings designed ır single pipe penetrations through single ply roofs. Virtually any common pipe size can be accommodated with one of these boots. The onically shaped steps of the Portals Plus Pipe Boots will securely seal all pipes and its large double thick molded rib at the top of each step ffers superior tear resistance and reinforcement, as well as a cutting guide for installation. The Portls Plus Stainless Snaplock Clamp maximizes ıe secure seal at the penetration. Utilizing the Pipe Boots eliminates workmanship errors in field fabrication and makes flashing pipes a clean, onsistent approach. Portals Plus Adapter Rings can be used to seal very small pipes, as well as unusual shapes such as angle irons and quare tubes.

)ther Flashing Systems: Pipe Portals, Double Pipe Portals, Alumi-Flash

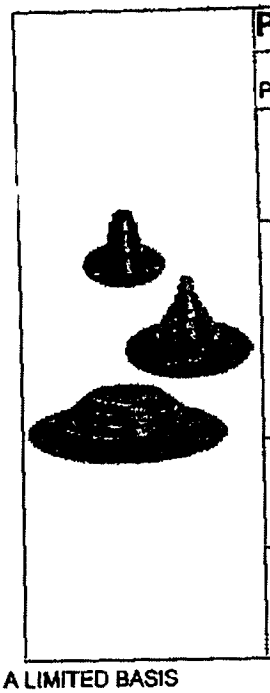

PIPE BOOTS (w/ CLAMPS)

NEW UPC PART NUMBER	DESCRIPTION	QTY/CTN	LIST PRICE PER UNIT
42100	SMALL - BLACK EPDM	10	$ 20.60
42130	SMALL - WHITE EPDM	10	$ 22.05
44130	SMALL - WHITE HYPALON*	10	$ 23.50
42110	MEDIUM - BLACK EPDM	10	$ 26.95
42140	MEDIUM - WHITE EPDM	10	$ 32.55
43170	MEDIUM - BLACK NEOPRENE	10	$ 40.70
44170	MEDIUM - WHITE HYPALON*	10	$ 34.40
46209	MEDIUM - WHITE TPO**	8	$ CF.00
48009	MEDIUM - WHITE PVC**	8	$ CF.00
42121	LARGE - BLACK EPDM	5	$ 95.55
42151	LARGE - WHITE EPDM	5	$ 98.00
43181	LARGE - BLACK NEOPRENE	5	$ 134.75
45000	QUADRASEAL 212R - BLACK EPDM	10	$ 42.00
45010	QUADRASEAL 412R - BLACK EPDM	10	$ 42.00
45020	QUADRASEAL 481R - BLACK EPDM	10	$ 42.00

* - AVAILABLE ON A LIMITED BASIS
** - ALL COLORS AVAILABLE (call Portals Plus)
$CF.00 - CONSULT FACTORY

PIPE BOOTS

Pipe Flashings (boots)- for economical flashings of single ply roofing systems. Pipe Boots (or witches' hats) are economical flashings designed for single pipe penetrations through single ply roofs. Virtually any common pipe size can be accommodated with one of these boots. The conically shaped steps of the Portals Plus Pipe Boots will securely seal all pipes and its large double thick molded rib at the top of each step offers superior tear resistance and reinforcement, as well as a cutting guide for installation. The Portls Plus Stainless Snaplock Clamp maximizes the secure seal at the penetration. Utilizing the Pipe Boots eliminates workmanship errors in field fabrication and makes flashing pipes a clean, consistent approach. Portals Plus Adapter Rings can be used to seal very small pipes, as well as unusual shapes such as angle irons and square tubes.

Other Flashing Systems: Pipe Portals, Double Pipe Portals, Alumi-Flash

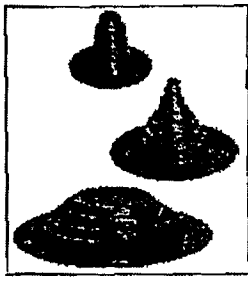

PIPE BOOTS (w/ ADHESIVE TAPE)

NEW UPC PART NUMBER	DESCRIPTION	QTY/CTN	LIST PRICE PER UNIT
42500	SMALL - BLACK EPDM	10	$ 27.70
42510	MEDIUM - BLACK EPDM	10	$ 40.00
43570	MEDIUM - BLACK NEOPRENE	10	$ 53.50

DECK-MATE

Deck-Mates- for watertight flashing of metal roof & wall systems. Deck-Mates are designed in a multitude of sizes to accommodate penetrations om 1/8" to 26" round and work in conjunction with any configuration of metal roofing or siding panel. The Portals Plus Deck-Mate is engineered ith an aluminum flanged base that can be bent by hand to conform to the roof profile, irregularities, or slopes. The aluminum flange is bonded to e flexible boot during the molding process and is completely isolated from the underside of the boot to prevent any potential galvanic corrosion uch as happens with solid metal flashings. Deck-Mates are available in two flexible boot materials- EPDM, with a serviceable temperature range of 50F to +270F, and Silicone, for both extremely low and extremely high temperature applications, with a serviceable temperature range of -100F to 500F. Installation is quick, easy, and secure, requiring only an approved sealant on the underside and stainless fasteners. Portals Plus Adapter ings can further extend the capabilities of the Deck-Mates by sealing unusual shapes such as angle irons and square tubes.

EPDM DECK-MATE

NEW UPC PART NUMBER	DESCRIPTION	QTY/ CTN	LIST PRICE PER UNIT
81006	DM#0 1/8" - 3/4"	15	$ 17.40
81016	DM#1 1/4" - 2"	15	$ 20.75
81026	DM#2 1" - 3-1/4"	15	$ 25.20
81036	DM#3 1/4" - 4"	15	$ 29.90
81040	DM#4 3" - 6"	10	$ 34.20
81050	DM#5 4" - 7"	10	$ 37.60
81060	DM#6 5" - 9"	10	$ 66.85
81070	DM#7 6" - 11"	10	$ 80.65
81085	DM#8 7" - 13"	5	$ 92.35
81091	DM#9 10" - 18"	1	$ 188.20
81101	DM#10 13" - 26"	1	$ 455.90

DECK-MATE

Deck-Mates- for watertight flashing of metal roof & wall systems. Deck-Mates are designed in a multitude of sizes to accommodate penetrations rom 1/8" to 26" round and work in conjunction with any configuration of metal roofing or siding panel. The Portals Plus Deck-Mate is engineered vith an aluminum flanged base that can be bent by hand to conform to the roof profile, irregularities, or slopes. The aluminum flange is bonded to he flexible boot during the molding process and is completely isolated from the underside of the boot to prevent any potential galvanic corrosion uch as happens with solid metal flashings. Deck-Mates are available in two flexible boot materials- EPDM, with a serviceable temperature range of 60F to +270F, and Silicone, for both extremely low and extremely high temperature applications, with a serviceable temperature range of -100F to -500F. Installation is quick, easy, and secure, requiring only an approved sealant on the underside and stainless fasteners. Portals Plus Adapter Rings can further extend the capabilities of the Deck-Mates by sealing unusual shapes such as angle irons and square tubes.

SILICONE DECK-MATE - HIGH TEMPERATURE w/CLAMP

NEW UPC PART NUMBER	DESCRIPTION	QTY/ CTN	LIST PRICE PER UNIT
82016	SDM#1 1/4" - 2"	15	$ 28.90
82026	SDM#2 1" - 3-1/4"	15	$ 32.95
82036	SDM#3 1/4" - 4"	15	$ 44.15
82040	SDM#4 3" - 6"	10	$ 85.45
82050	SDM#5 4" - 7"	10	$ 97.45
82060	SDM#6 5" - 9"	10	$ 113.80
82070	SDM#7 6" - 11"	10	$ 164.30
82085	SDM#8 7" - 13"	5	$ 250.80
82091	SDM#0 10" - 18"	1	$ 387.80
82101	SDM#0 13" - 26"	1	$ 720.95

ALUMI-FLASH SYSTEM

Alumi-Flash- for one to four penetrations in one watertight unit. Alumi-Flash makes pitch pans obsolete! Portals Plus Alumi-Flash consists of a lexible EPDM cap w/Stainless Snaplock Clamp(s) and a one piece, spun aluminum base. The flexible EPDM cap eliminates roof leaks because enetrations can expand, contract, and vibrate independently of the roofing system. There are five different cap styles available which can ccommodate a variety of round pipes, tubes, and conduits from 3/8" round through 12" round, and, with Portals Plus Adapter Rings, angle irons nd square tubes, as well. The EPDM cap is mechanically sealed to the Alumi-Flash base by a double "Weather-Tite Pressure Seal", which onsists of two beads formed into the collar of the base that mate with double grooves molded into the inside of the cap. The Portals Plus Alumi-lash provides a permanent, watertight, and maintenance-free means for penetrating roofs that is simple and easy to install. Adapter Rings can odify these penetrations

ALUMI-FLASH EW w/ PRIMED FLANGE

ALP00467

NEW UPC PART NUMBER	DESCRIPTION	QTY/ CTN	LIST PRICE PER UNIT
22215 22225 22235 22245	w/ 126 BLACK CAP (1 - 2" to 6" pipe) w/ 212 BLACK CAP (2 - .375" to 1 & 2 - 1" - 2" pipes) w/ 412 BLACK CAP (4 - 1" to 2" pipes) w/ 481 BLACK CAP (4 - .375" to 1" pipes)	5	$ 101.65
22265 22275	w/ 126 WHITE CAP (1 - 2" to 6" pipe) w/ 212 WHITE CAP (2 - .375" to 1 & 2 - 1" - 2" pipes)	5	$ 102.90

ALUMI-FLASH SYSTEM

Alumi-Flash- for one to four penetrations in one watertight unit. Alumi-Flash makes pitch pans obsolete! Portals Plus Alumi-Flash consists of a exible EPDM cap w/Stainless Snaplock Clamp(s) and a one piece, spun aluminum base. The flexible EPDM cap eliminates roof leaks because enetrations can expand, contract, and vibrate independently of the roofing system. There are five different cap styles available which can ccommodate a variety of round pipes, tubes, and conduits from 3/8" round through 12" round, and, with Portals Plus Adapter Rings, angle irons nd square tubes, as well. The EPDM cap is mechanically sealed to the Alumi-Flash base by a double "Weather-Tite Pressure Seal", which onsists of two beads formed into the collar of the base that mate with double grooves molded into the inside of the cap. The Portals Plus Alumi-lash provides a permanent, watertight, and maintenance-free means for penetrating roofs that is simple and easy to install. Adapter Rings can nodify these penetrations

ALUMI-FLASH EW

NEW UPC PART NUMBER	DESCRIPTION	QTY/ CTN	LIST PRICE PER UNIT
23015 23025 23035 23045	w/ 126 BLACK CAP (1 - 2" to 6" pipe) w/ 212 BLACK CAP (2 - .375" to 1 & 2 - 1" - 2" pipes) w/ 412 BLACK CAP (4 - 1" to 2" pipes) w/ 481 BLACK CAP (4 - .375" to 1" pipes)	5	$ 86.30
23055 23065	w/ 126 WHITE CAP (1 - 2" to 6" pipe) w/ 212 WHITE CAP (2 - .375" to 1 & 2 - 1" - 2" pipes)	5	$ 87.60

SHINGLE FLASHING SYSTEMS

hingle Flashings- for effectively sealing pipe penetrations on shingle roofs. Shingle Flashings provide permanent elastic seals at pipe enetrations from 1- 1/4" to 4" round on all shingle roofing systems up to a 40 degree slope. Portals Plus Shingle Flashings consist of an lastomeric collar locked into a nailable rigid base which integrates into the shingle roofing system. Also available is an all elastomeric one iece Shingle Flashing which can accommodate roof slopes up to 45 degrees. Shingle Flashings are the solution to temporary, leaky field-abricated sheet metal and roof cement flashings.

GALVANIZED

NEW UPC PART NUMBER	SIZE	DESCRIPTION	LIST PRICE PER UNIT
85009	1.25" - 1.50"	GALVANIZED FLASHING BASE w/ elastomeric collar	$ 6.40
85019	2"	GALVANIZED FLASHING BASE w/ elastomeric collar	$ 6.75
85029	3"	GALVANIZED FLASHING BASE w/ elastomeric collar	$ 7.35
85039	4"	GALVANIZED FLASHING BASE w/ elastomeric collar	$ 9.50

SHINGLE FLASHING SYSTEMS

ALP00468

hingle Flashings- for effectively sealing pipe penetrations on shingle roofs. Shingle Flashings provide permanent elastic seals at pipe enetrations from 1- 1/4" to 4" round on all shingle roofing systems up to a 40 degree slope. Portals Plus Shingle Flashings consist of an lastomeric collar locked into a nailable rigid base which integrates into the shingle roofing system. Also available is an all elastomeric one iece Shingle Flashing which can accommodate roof slopes up to 45 degrees. Shingle Flashings are the solution to temporary, leaky field-abricated sheet metal and roof cement flashings.

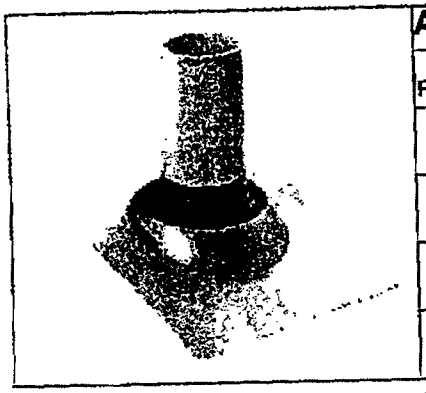

ALUMINUM

NEW UPC PART NUMBER	SIZE	DESCRIPTION	LIST PRICE PER UNIT
85209	1.25" - 1.50"	ALUMINUM FLASHING BASE w/ elastomeric collar	$ 7.60
85219	2"	ALUMINUM FLASHING BASE w/ elastomeric collar	$ 8.10
85229	3"	ALUMINUM FLASHING BASE w/ elastomeric collar	$ 9.00
85239	4"	ALUMINUM FLASHING BASE w/ elastomeric collar	$ 10.80

SHINGLE FLASHING SYSTEMS

Shingle Flashings- for effectively sealing pipe penetrations on shingle roofs. Shingle Flashings provide permanent elastic seals at pipe penetrations from 1- 1/4" to 4" round on all shingle roofing systems up to a 40 degree slope. Portals Plus Shingle Flashings consist of an elastomeric collar locked into a nailable rigid base which integrates into the shingle roofing system. Also available is an all elastomeric one piece Shingle Flashing which can accommodate roof slopes up to 45 degrees. Shingle Flashings are the solution to temporary, leaky field-fabricated sheet metal and roof cement flashings.

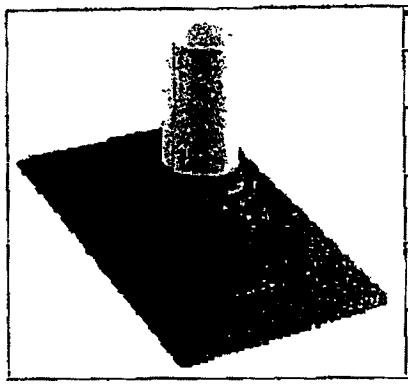

THERMOPLASTIC

NEW UPC PART NUMBER	SIZE	DESCRIPTION	LIST PRICE PER UNIT
85309	1.25" - 1.50"	TERMOPLASTIC FLASHING BASE w/ elastomeric collar	$ 5.10
85319	2"	TERMOPLASTIC FLASHING BASE w/ elastomeric collar	$ 5.25
85329	3"	TERMOPLASTIC FLASHING BASE w/ elastomeric collar	$ 5.35
85339	4"	TERMOPLASTIC FLASHING BASE w/ elastomeric collar	$ 6.05

SHINGLE FLASHING SYSTEMS

Shingle Flashings- for effectively sealing pipe penetrations on shingle roofs. Shingle Flashings provide permanent elastic seals at pipe penetrations from 1- 1/4" to 4" round on all shingle roofing systems up to a 40 degree slope. Portals Plus Shingle Flashings consist of an elastomeric collar locked into a nailable rigid base which integrates into the shingle roofing system. Also available is an all elastomeric one piece Shingle Flashing which can accommodate roof slopes up to 45 degrees. Shingle Flashings are the solution to temporary, leaky field-fabricated sheet metal and roof cement flashings.

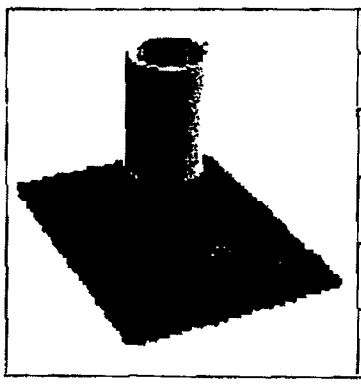

ELASTOMERIC

NEW UPC PART NUMBER	SIZE	DESCRIPTION	LIST PRICE PER UNIT
85109	1.25" - 1.50"	ELASTOMERIC FLASHING BASE w/ elastomeric collar	$ 5.75
85119	2"	ELASTOMERIC FLASHING BASE w/ elastomeric collar	$ 6.05
85129	3"	ELASTOMERIC FLASHING BASE w/ elastomeric collar	$ 7.25
85139	4"	ELASTOMERIC FLASHING BASE w/ elastomeric collar	$ 9.10

ALUMI-FLASH SYSTEM

ımi-Flash- for one to four penetrations in one watertight unit. Alumi-Flash makes pitch pans obsolete! Portals Plus Alumi-Flash consists of a xible EPDM cap w/Stainless Snaplock Clamp(s) and a one piece, spun aluminum base. The flexible EPDM cap eliminates roof leaks because netrations can expand, contract, and vibrate independently of the roofing system. There are five different cap styles available which can commodate a variety of round pipes, tubes, and conduits from 3/8" round through 12" round, and, with Portals Plus Adapter Rings, angle irons d square tubes, as well. The EPDM cap is mechanically sealed to the Alumi-Flash base by a double "Weather-Tite Pressure Seal", which nsists of two beads formed into the collar of the base that mate with double grooves molded into the inside of the cap. The Portals Plus Alumi-ısh provides a permanent, watertight, and maintenance-free means for penetrating roofs that is simple and easy to install. Adapter Rings can ɔdify these penetrations

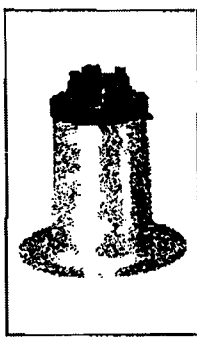

ALUMI-FLASH XT

NEW UPC PART NUMBER	DESCRIPTION	QTY/ CTN	LIST PRICE PER UNIT
24015 24025 24035 24045	w/ 126 BLACK CAP (1 - 2" to 6" pipe) w/ 212 BLACK CAP (2 - .375" to 1 & 2 - 1" - 2" pipes) w/ 412 BLACK CAP (4 - 1" to 2" pipes) w/ 481 BLACK CAP (4 - .375" to 1" pipes)	4	$ 141.50
24065 24075	w/ 126 WHITE CAP (1 - 2" to 6" pipe) w/ 212 WHITE CAP (2 - .375" to 1 & 2 - 1" - 2" pipes)	4	$ 144.50

HINGLE FLASHING SYSTEMS

ingle Flashings- for effectively sealing pipe penetrations on shingle roofs. Multi Fit Shingle Flashings provide permanent elastic seals at pipe netrations from 1-1/2" to 4" round on all shingle roofing systems up to a 40 degree slope. Portals Plus Multi Fit Shingle Flashings consist of an ıstomeric collar locked into a nailable rigid base which integrates into the shingle roofing system. Multi Fit Shingle Flashings are the solution to nporary, leaky field- fabricated sheet metal and roof cement flashings.

GALVANIZED MULTI FIT

NEW UPC PART NUMBER	SIZE	DESCRIPTION	LIST PRICE PER UNIT
85049	1.50" - 2" - 3"	GALVANIZED FLASHING BASE w/ elastomeric collar	$ 5.77
85059	3" - 4"	GALVANIZED FLASHING BASE w/ elastomeric collar	$ 5.77

HINGLE FLASHING SYSTEMS

ingle Flashings- for effectively sealing pipe penetrations on shingle roofs. Multi Fit Shingle Flashings provide permanent elastic seals at pipe netrations from 1- 1/4" to 4" round on all shingle roofing systems up to a 40 degree slope. Portals Plus Multi Fit Shingle Flashings consist of an ıstomeric collar locked into a nailable rigid base which integrates into the shingle roofing system. Multi Fit Shingle Flashings are the solution to nporary, leaky field- fabricated sheet metal and roof cement flashings.

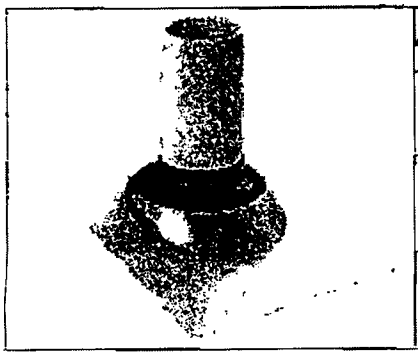

ALUMINUM MULTI FIT

NEW UPC PART NUMBER	SIZE	DESCRIPTION	LIST PRICE PER UNIT
85249	1.50" - 2" - 3"	ALUMINUM FLASHING BASE w/ elastomeric collar	$ 7.17
85259	3" - 4"	ALUMINUM FLASHING BASE w/ elastomeric collar	$ 7.17

ALP00470

HINGLE FLASHING SYSTEMS

ingle Flashings- for effectively sealing pipe penetrations on shingle roofs. Multi Fit Shingle Flashings provide permanent elastic seals at pipe netrations from 1- 1/4" to 4" round on all shingle roofing systems up to a 40 degree slope. Portals Plus Multi Fit Shingle Flashings consist of an istomeric collar locked into a nailable rigid base which integrates into the shingle roofing system. Multi Fit Shingle Flashings are the solution to nporary, leaky field- fabricated sheet metal and roof cement flashings.

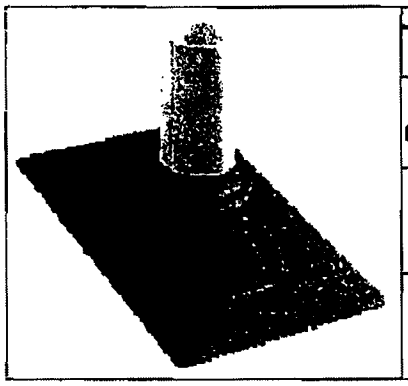

THERMOPLASTIC MULTI FIT

NEW UPC PART NUMBER	SIZE	DESCRIPTION	LIST PRICE PER UNIT
85349	1.50" - 2" - 3"	TERMOPLASTIC FLASHING BASE w/ elastomeric collar	$ 4.70
85359	3" - 4"	TERMOPLASTIC FLASHING BASE w/ elastomeric collar	$ 4.70

LASTI-FLASH SYSTEM

isti-Flash- for one to four penetrations in one watertight unit. Plasti-Flash makes pitch pans obsolete! Portals Plus Plasti- Flash consists of a xible EPDM cap w/Stainless Snaplock Clamp(s) and a one piece, weldable white PVC base. The flexible white EPDM cap eliminates roof iks because penetrations can expand, contract, and vibrate independently of the roofing system. There are two different cap styles available ich can accommodate a variety of round pipes, tubes, and conduits from 3/8" round through 6" round, and, with Portals Plus black Adapter ngs, angle irons and square tubes, as well. The white EPDM cap is mechanically sealed to the Plasti-Flash base by a double "Weather-Tite essure Seal", which consists of two beads formed into the collar of the base that mate with double grooves molded into the inside of the cap. e Portals Plus Plasti-Flash provides a permanent, watertight, and maintenance-free means for penetrating roofs that is simple and easy to stall.
apter Rings can modify these penetrations

PLASTI-FLASH

NEW UPC PART NUMBER	OLD PART PART NUMBER	DESCRIPTION	QTY/CTN	LIST PRICE PER UNIT
26015 26025	PF104 PF102	w/ 126 BLACK CAP (1 - 2" to 6" pipe) w/ 212 BLACK CAP (2 - .375" to 1 & 2 - 1" - 2" pipes)	5	$ 69.85
26035	PF500	RETROFIT PLASTI-FLASH w/ SC36 RETROFIT BLACK CAP	5	$ 134.75

SINGLE PIPE PORTAL SYSTEM

Pipe Portal System - for one to eight penetrations in one watertight unit. The Pipe Portal System is a versatile, leak proof, and weathertight solution to routing pipes through a roof. The Pipe Portal System is designed to allow both horizontal and vertical pipe movement, yet provide a maintenance-free permanent installation which accommodates penetrations from 3/8" round through 12" round, and, with Portals Plus Adapter Rings, angle irons and square tubes, as well. Compression molded EPDM rubber caps provide the flexible seal at each penetration. Stainless Snaplock Clamps provide an added measure of assurance at each penetration. The flexible EPDM caps are mechanically sealed to the Pipe Portal cover by a double "Weather-Tite Pressure Seal", which consists of two beads formed into the collar of the cover that mate with double grooves molded into the inside of the cap. The curb cover is molded of one piece ultraviolet-resistant ABS plastic and laminated with an acrylic coating for extra protection. This manufacturing process creates exposed materials that are both ozone and ultraviolet resistant with a serviceable temperature range of -40F to +160F. To complete the system, the roof curb is fabricated from heavy 18 gauge galvanized iron with mitered and welded corners and insulated on all four sides. The Pipe Portal System allows roofing membranes and base flashings to be installed in accordance with the National Roofing Contractors Association (NRCA) recommendations.

PIPE PORTAL® (Cover, Black Cap & Clamps) RC-2A

ALP00471

NEW UPC PART NUMBER	DESCRIPTION	QTY/ CTN	LIST PRICE PER UNIT
32005 32015 32025 32035	w/ 126 BLACK CAP (1 - 2" to 6" pipe) w/ 212 BLACK CAP (2 - .375" to 1 & 2 - 1" - 2" pipes) w/ 412 BLACK CAP (4 - 1" to 2" pipes) w/ 481 BLACK CAP (4 - .375" to 1" pipes)	5	**$ 96.80**
32041	w/ 182 BLACK CAP (1 - 8" to 12" pipe)	1	**$ 154.40**
32055 32065	w/ 126 WHITE CAP (1 - 2" to 6" pipe) w/ 212 WHITE CAP (2 - .375" to 1 & 2 - 1" - 2" pipes)	5	**$ 98.00**
32101	SMALL RC-2A STRAIGHT SIDED CURB - 11" High	1	**$ 104.00**
32131	LARGE RC-2A STRAIGHT SIDED CURB - 11" High	1	**$ 199.00**

See more information about the caps.

PORTALS PLUS 484 N. Thomas Drive, Bensenville, IL 60106 TEL: (630) 595-7320 FAX: (630) 766-5259

ALP00472

Pipe Flashings

Technical Product Information

Flashings for all size penetrations for single ply roofs

Small Pipe Boot

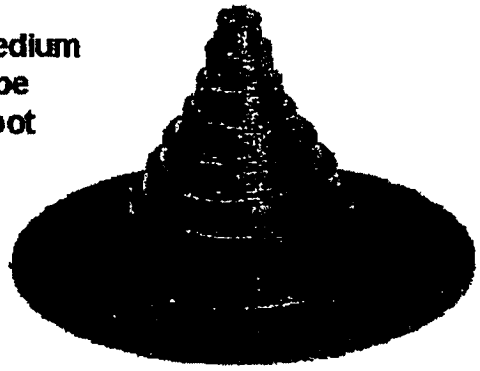

Medium Pipe Boot

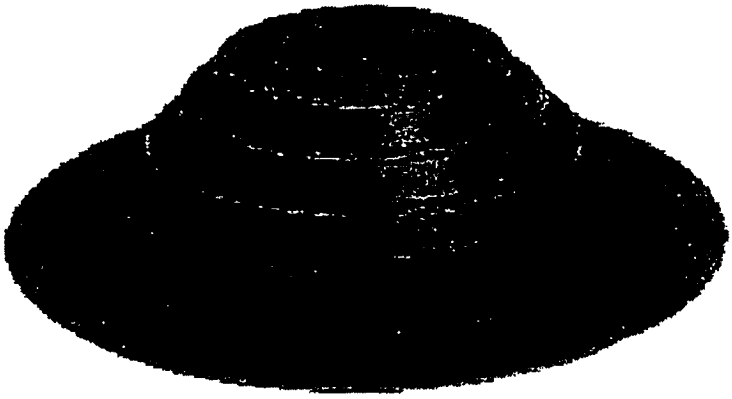

Large Pipe Boot

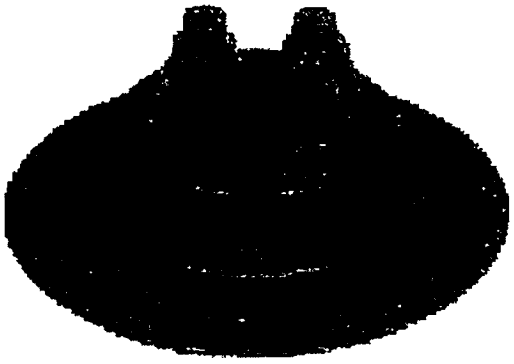

Quadraseal Pipe Boot

The "Pipe Boot" is an economical flashing designed for single pipe penetrations on single ply rubber roofs. The unit will accomodate virtually all pipe sizes: 1.75" and 2.75" on Small Pipe Boot, 1" through 6" on Medium Pipe Boot and 1" through 12" on Large Pipe Boot. Pipe Boots are available in EPDM, Neoprene, Hypalon, TPO, or PVC material. The Quadraseal is designed to allow as many as four pipes up to 2" in diameter to pass through one flashing. Quadraseals are available in EPDM material only. The conically shaped steps of the Portals Plus pipe flashing will securely seal all pipes and the large double thick molded rib at the top of each step offers supreme tear resistance and reinforcement, as well as a cutting guide. Utilizing the Pipe Flashings eliminates the workmanship error in field fabrication and makes flashing pipes a clean, consistent approach.

Adapters available for round, square tube, and angle iron available to fit most pipe boots.

ALP00473

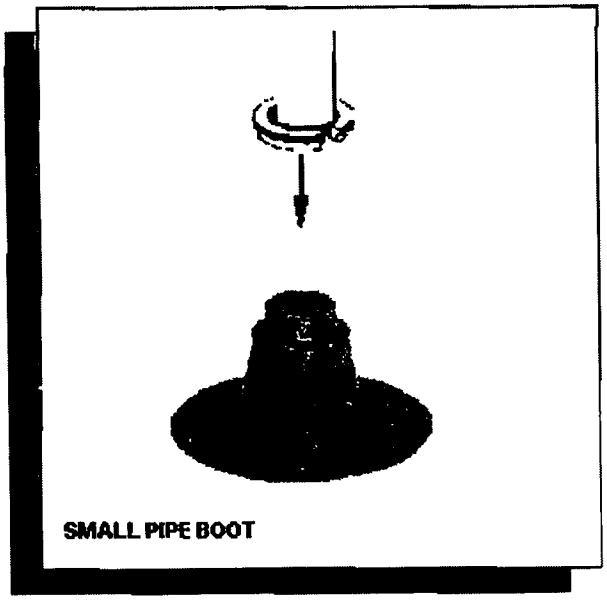

SMALL PIPE BOOT

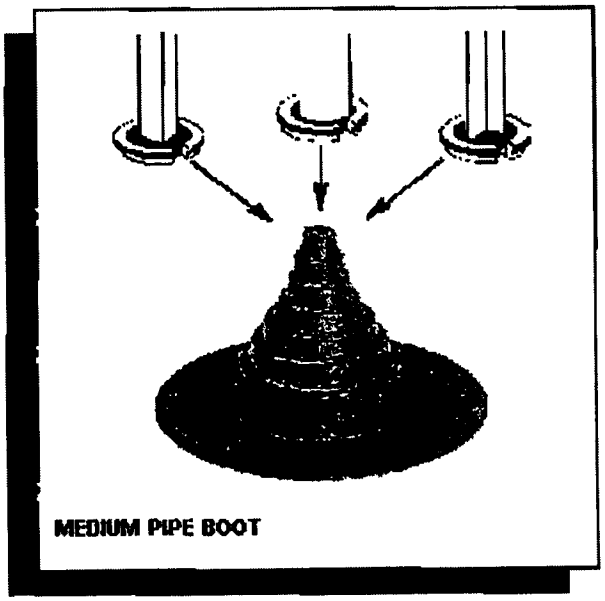

MEDIUM PIPE BOOT

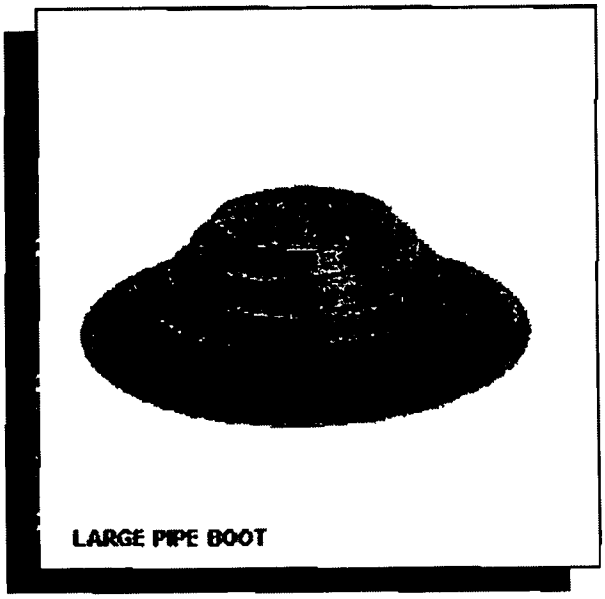

LARGE PIPE BOOT

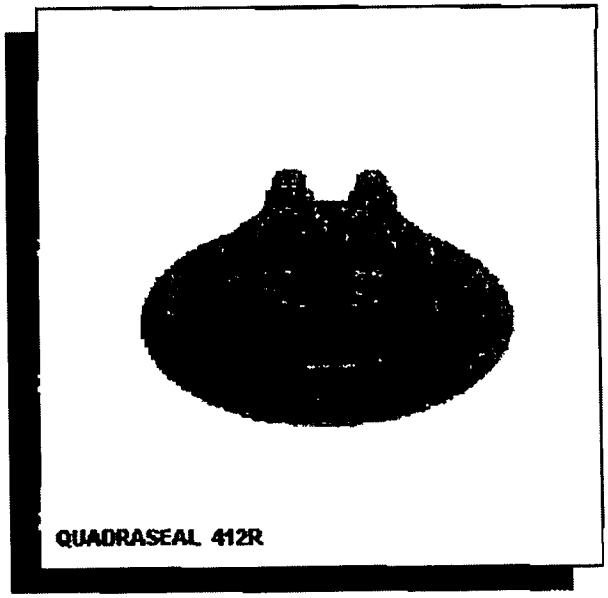

QUADRASEAL 412R

NEW UPC PART NUMBER	DESCRIPTION	QTY/CTN	LIST PRICE PER UNIT
42100	SMALL - BLACK EPDM	10	$ 20.60
42130	SMALL - WHITE EPDM	10	$ 22.05
44130	SMALL - WHITE HYPALON*	10	$ 23.50
42110	MEDIUM - BLACK EPDM	10	$ 26.95
42140	MEDIUM - WHITE EPDM	10	$ 32.55
43170	MEDIUM - BLACK NEOPRENE	10	$ 40.70
44170	MEDIUM - WHITE HYPALON*	10	$ 34.40
OEM	MEDIUM - WHITE TPO**	8	$ CF.00
OEM	MEDIUM - WHITE PVC**	8	$ CF.00
42121	LARGE - BLACK EPDM	5	$ 95.55
42151	LARGE - WHITE EPDM	5	$ 98.00
43181	LARGE - WHITE NEOPRENE	5	$ 134.75

ALP00474

** - ALL COLORS AVAILABLE FOR TPO & PVC (call Portals Plus)
CF - DENOTES CALL FACTORY

Quadraseals
Adapter Rings
Installation Instructions
CAD Page

Other Flashing Systems:
Pipe Portals
Double Pipe Portals
Alumi-Flash

PORTALS PLUS *484 N. Thomas Drive, Bensenville, IL 60106* *TEL: (630) 595-7320 FAX: (630) 766-5259*

All information is subject to change without notice. Dimensions and specifications shown are within manufacturing tolerances.
© Copyright Commercial Products Group of Hart & Cooley, Inc., July, 2008. All Rights Reserved.

ALP00475

Pipe Flashings

Technical Product Information

Medium Pipe Boot

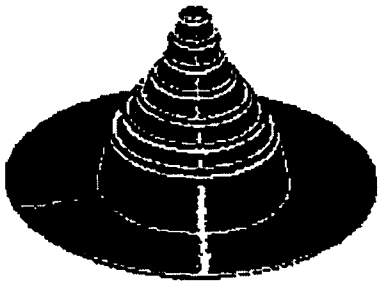

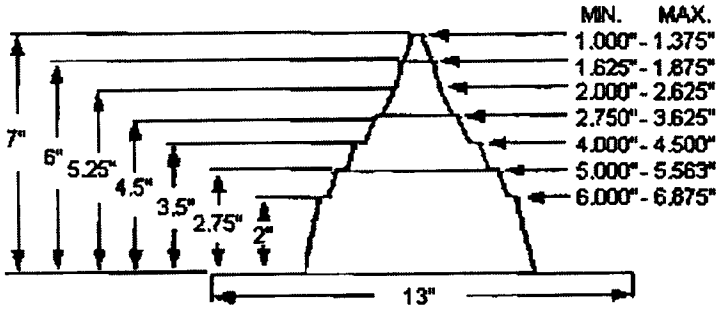

SPECIFICATION

urnish and install the Portals Plus Medium Pipe Boot as manufactured by Portals Plus, Inc., Bensenville, IL, at all ɔints where any projection penetrates the roof system, and is less than 6" in diameter. The Medium Pipe Boot shall clude 60 mil EPDM, NEOPRENE, or HYPALON compression molded body. The Medium Pipe Boot shall also clude Portals Plus' Snaplock Clamp. Whenever necessary utilize Portals Plus Adapters to seal to square tubing and ngle iron and for round penetrations less than 1" in diameter. Use white or black as necessary. Attachment of Medium ipe Boot to roof system shall be done in accordance with Portals Plus Installation Instructions and the roofing ıembrane manufacturer's requirements.

NEW UPC PART NUMBER	DESCRIPTION	QTY/CTN	LIST PRICE PER UNIT
42110	MEDIUM - BLACK EPDM	10	$ 26.95
42140	MEDIUM - WHITE EPDM	10	$ 32.55
43170	MEDIUM - BLACK NEOPRENE	10	$ 40.70
44170	MEDIUM - WHITE HYPALON*	10	$ 31.85

* - AVAILABLE ON A LIMITED BASIS

Quadraseals.
Adapter Rings.
Installation Instructions.
CAD Page

Other Flashing Systems:
Pipe Portals
Double Pipe Portals
Alumi-Flash

Main Page

PORTALS PLUS 484 N. Thomas Drive, Bensenville, IL 60106 TEL: (630) 595-7320 FAX: (630) 766-5259

All information is subject to change without notice. Dimensions and specifications shown are within manufacturing tolerances.
© Copyright Commercial Products Group of Hart & Cooley, Inc., July, 2008. All Rights Reserved.

ALP00476

Pipe Flashings

Technical Product Information

Large Pipe Boot

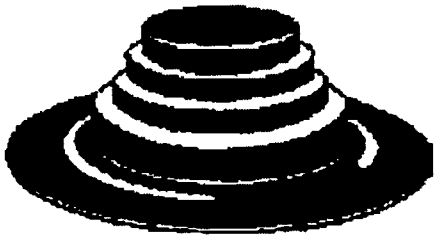

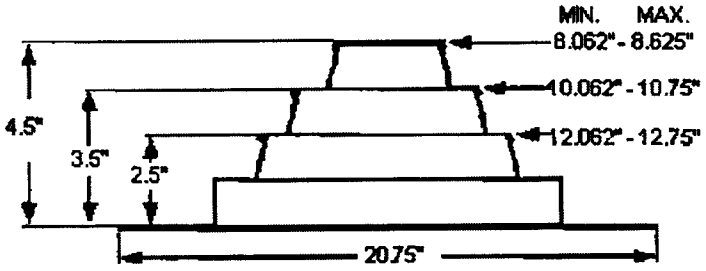

SPECIFICATION

urnish and install the Portals Plus Large Pipe Boot as manufactured by Portals Plus, Inc., Bensenville, IL, at all points here any projection penetrates the roof system, and is from 8" to 12" in diameter. The Large Pipe Boot shall include 60 il EPDM or NEOPRENE compression molded body. The Large Pipe Boot shall also include Portals Plus' Snaplock lamp. Use white or black as necessary. Attachment of Large Pipe Boot to roof system shall be done in accordance ith Portals Plus Installation Instructions and the roofing membrane manufacturer's requirements.

NEW UPC PART NUMBER	DESCRIPTION	QTY/CTN	LIST PRICE PER UNIT
42121	LARGE - BLACK EPDM	5	$ 95.55
42151	LARGE - WHITE EPDM	5	$ 98.00
43181	LARGE - BLACK NEOPRENE	5	$ 134.75

Quadraseals.
Adapter Rings.
Installation Instructions.
CAD Page

Other Flashing Systems:
Pipe Portals
Double Pipe Portals
Alumi-Flash

Main Page

PORTALS PLUS 484 N. Thomas Drive, Bensenville, IL 60106 TEL: (630) 595-7320 FAX: (630) 766-6259

All information is subject to change without notice. Dimensions and specifications shown are within manufacturing tolerances.
© Copyright Commercial Products Group of Hart & Cooley, Inc., July, 2008. All Rights Reserved.

Pipe Flashings

Technical Product Information

Small Pipe Boot

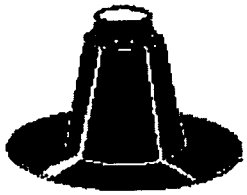

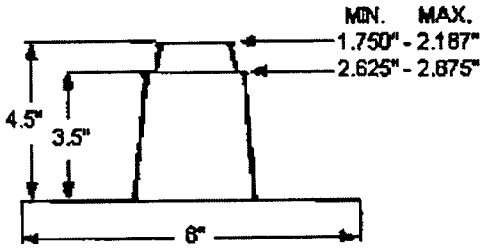

SPECIFICATION

urnish and install the Portals Plus Small Pipe Boot as manufactured by Portals Plus, Inc., Bensenville, IL, at all points here any projection penetrates the roof system, and is less than 3" in diameter. The Small Pipe Boot shall include 60 ıil EPDM, NEOPRENE, or HYPALON compression molded body. The Small Pipe Boot shall also include Portals lus' Snaplock Clamp. Use white or black as necessary. Use Portals Plus Adapter Rings for round penetrations less than ' diameter. Attachment of Small Pipe Boot to roof system shall be done in accordance with Portals Plus ıstallation Instructions and the roofing membrane manufacturer's requirements.

NEW UPC PART NUMBER	DESCRIPTION	QTY/CTN	LIST PRICE PER UNIT
42100	SMALL - BLACK EPDM	10	$ 20.60
42130	SMALL - WHITE EPDM	10	$ 22.05
44130	SMALL - WHITE HYPALON*	10	$ 23.50

* - AVAILABLE ON A LIMITED BASIS

Quadraseals.
Adapter Rings.
Installation Instructions.
CAD Page

Other Flashing Systems:
Pipe Portals
Double Pipe Portals
Alumi-Flash

Main Page

PORTALS PLUS 454 N. Thomas Drive, Bensenville, IL 60106 TEL: (630) 595-7320 FAX: (630) 766-5259

All information is subject to change without notice. Dimensions and specifications shown are within manufacturing tolerances.
© Copyright Commercial Products Group of Hart & Cooley, Inc., July, 2008. All Rights Reserved.

ALP00478

Installation Instructions

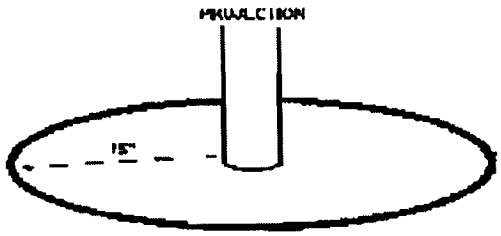

STEP 1
Clean and prepare surface 15" in all directions from the penetration. Check with roofing manufacturer to determine if any special preparations are required.

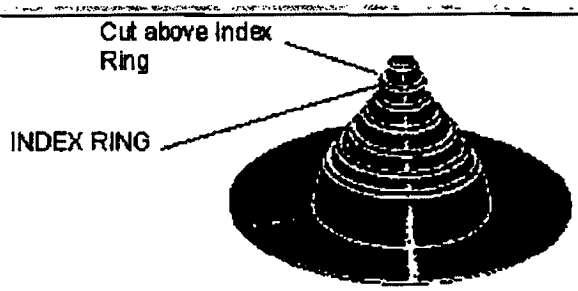

STEP 2
Select proper step of the flashing and cut off above index ring. REMEMBER: When in doubt, cut the smaller size. Clean and prime flange in accordance with roofing manufacturer's recommendations.

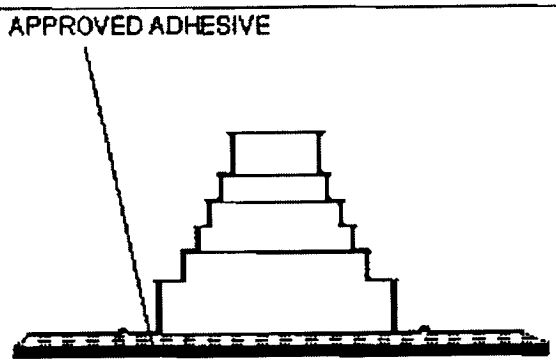

STEP 3
Apply roofing manufacturers' specified adhesive on base flange of boot and place boot around projection and complete attachment of flashing to roofing, according to roofing manufacturers' specification.

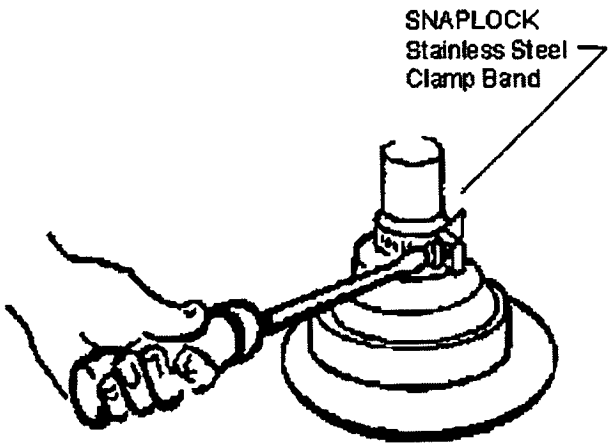

STEP 4
Using the Stainless Steel SnapLock Clamp, place at top of boot and tighten to projection.

PORTALS PLUS 484 N. Thomas Drive, Bensenville, IL 60106 TEL: (630) 595-7320 FAX: (630) 766-5259

All information is subject to change without notice. Dimensions and specifications shown are within manufacturing tolerances.
© Copyright Commercial Products Group of Hart & Cooley, Inc., January, 2008. All Rights Reserved.

ALP00479

Adapter Rings

Technical Product Information

For use with all new installation and retrofit penetration flashings

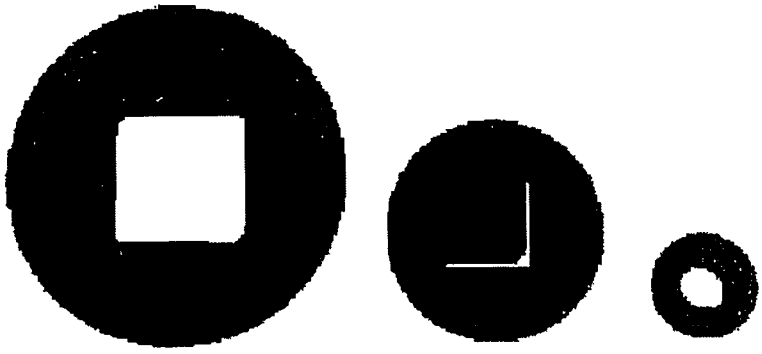

LARGE ROUND ADAPTERS

Part #	Projection O.D. Diameter	A
D001	.50"	.25"
D002	.75"	.50"
D003	.875"	.625"
D004	1"	.75"
D005	1.25"	1"
D006	1.50"	1.25"
D007	1.75"	1.50"
D008	2"	1.75"
D009	2.25"	2"
D010	2.50"	2.25"
D011	2.75"	2.50"
D012	3"	2.75"
D013	3.25"	3"
D014	3.5"	3.25"

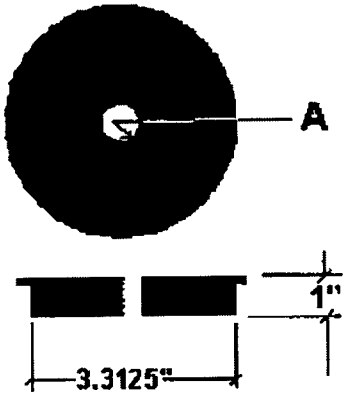

SMALL ROUND ADAPTERS

Part #	Projection O.D. Diameter	A
D301	.375"	.25"
D302	.50"	.375"
D303	.75"	.50"
D304	.875"	.75"

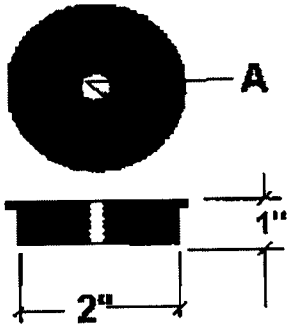

ALP00480

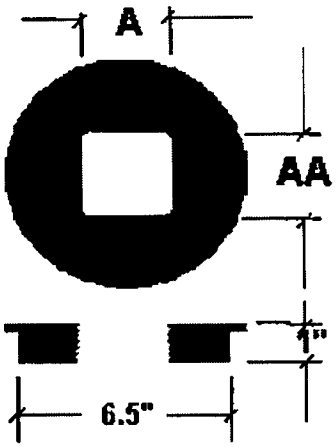

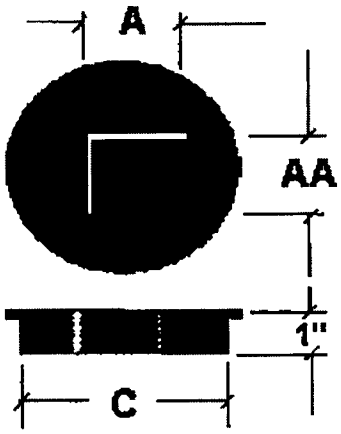

SQUARE TUBE ADAPTERS

Part #	A	AA
D103	3"	3"
D104"	4"	4"

ANGLE IRON ADAPTERS

Part #	A	AA	C
D201	1.75"	1.75"	4"
D206	3"	3"	5.25"
D298	4"	4"	6"
D200	1"	1"	4"

CAD Page

> Next Page >

PORTALS PLUS 464 N. Thomas Drive, Bensenville, IL 60106 TEL: (630) 595-7320 FAX: (630) 766-5259

All information is subject to change without notice. Dimensions and specifications shown are within manufacturing tolerances.
© Copyright Commercial Products Group of Hart & Cooley, Inc., January, 2008. All Rights Reserved.

United States Patent [19]

Houseman

[11] **Des. 269,454**

[45] ** **Jun. 21, 1983**

[54] **SEAL FOR A ROOF VENT PIPE OR SIMILAR ARTICLE**

[75] Inventor: **David G. Houseman**, Bayswater, Australia

[73] Assignee: **John Deks Australia Pty., Ltd.**, Baywater, Australia

[**] Term: **14 Years**

[21] Appl. No.: **228,955**

[22] Filed: **Jan. 27, 1981**

[30] **Foreign Application Priority Data**

Jul. 28, 1980 [AU] Australia 81,633

[51] Int. Cl. ..... D23—01

[52] U.S. Cl. D23/42

[58] Field of Search D23/40–47; 277/9; 52/60; 285/3, 4, 42, 43, 44, 58, 59, 60, 199

[56] **References Cited**

U.S. PATENT DOCUMENTS

D. 216,693	3/1970	Dammer	23/42
1,317,574	9/1919	Grosvold	285/44
1,587,250	6/1926	Stephenson	285/44
3,602,530	8/1971	Elwart	285/44 X
3,731,952	5/1973	Elwart	285/44 X
3,977,137	8/1976	Patry	52/60
4,120,129	10/1978	Nagler et al.	285/44 X
4,211,423	7/1980	Reech	285/4 X

Primary Examiner—Robert C. Spangler

Attorney, Agent, or Firm—Bucknam and Archer

[57] **CLAIM**

The ornamental design for a seal for a roof vent pipe or similar article, as shown and described.

DESCRIPTION

FIG. 1 is a top plan view of a seal for a roof vent pipe or similar article showing my new design;

FIG. 2 is a side elevational view partially in section;

FIG. 3 is a perspective view; and

FIG. 4 is a bottom plan view.

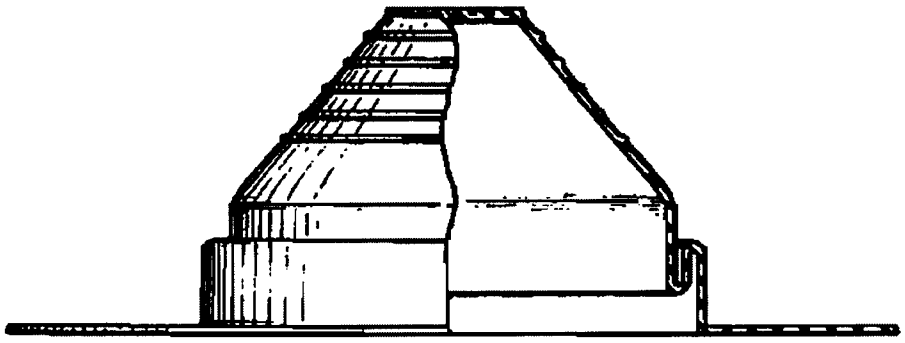

AS HOLDINGS vs. H&C MILCOR
Opposition No. 91182064
Serial No. 76/461,157
Deft. No. 13

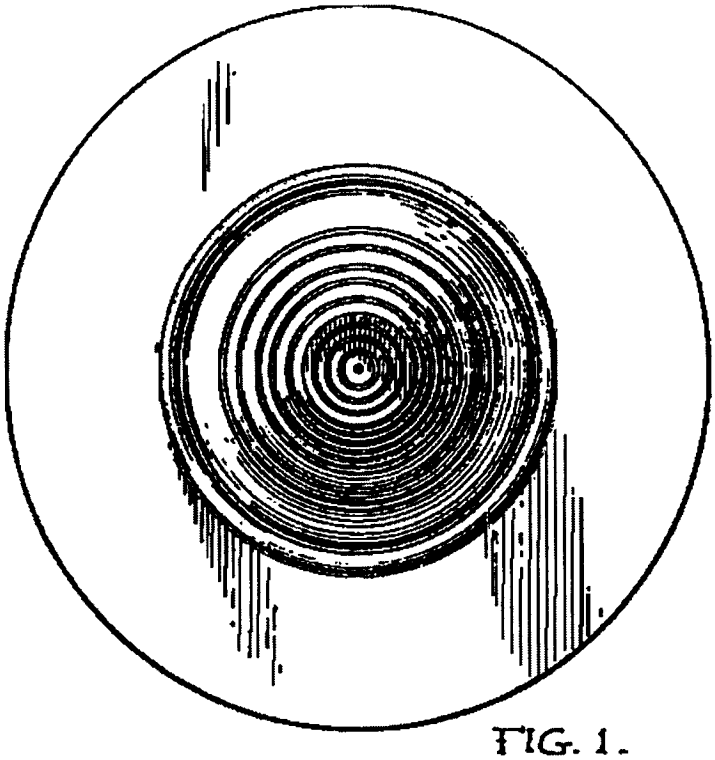

FIG. 1.

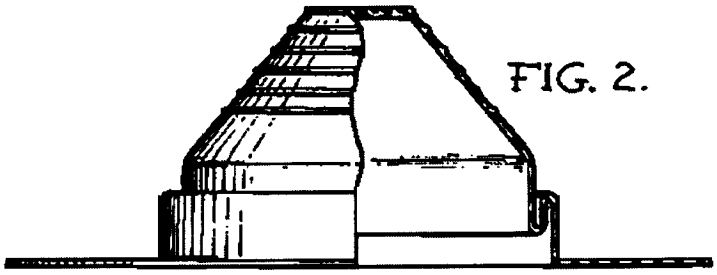

FIG. 2.

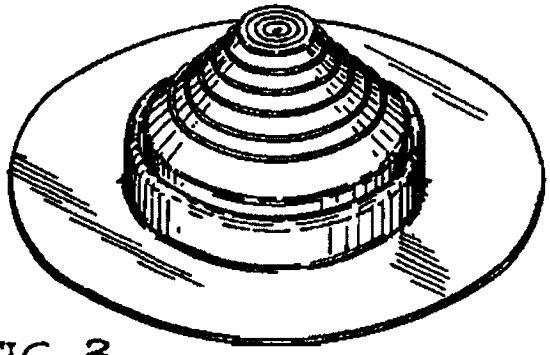

FIG. 3.

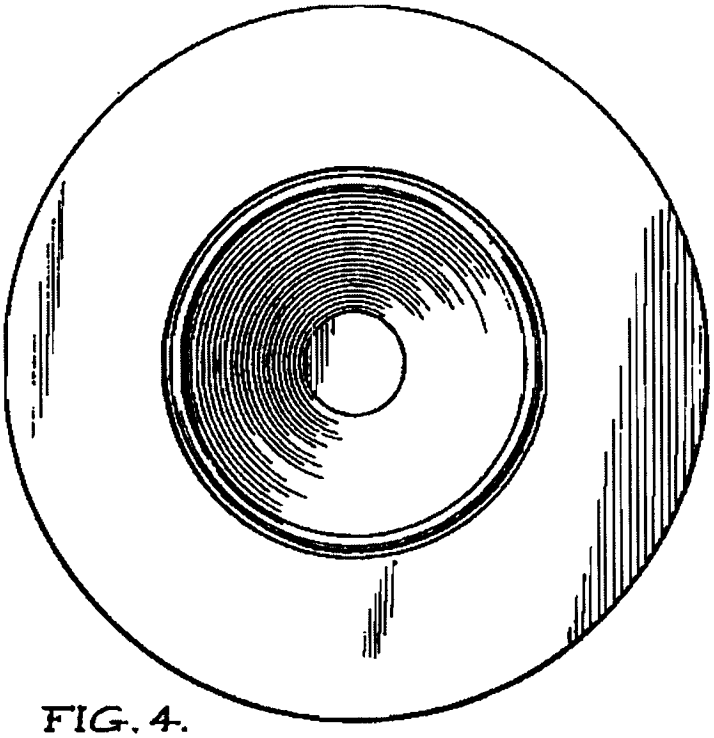

FIG. 4.

United States Patent [19]

Eriksson

[11] **Patent Number: Des. 287,872**

[45] **Date of Patent: ** Jan. 20, 1987**

[54] **SEALING DEVICE FOR SURROUNDING THE POINT OF EMERGENCE OF A PIPE FROM A WALL OR FLOOR**

[75] Inventor: **Stellan Eriksson**, Sollebrunn, Sweden

[73] Assignee: **Indoor Innovation Aktiebolag**, Ludvika, Sweden

[**] Term: **14 Years**

[21] Appl. No.: **557,526**

[22] Filed: **Dec. 2, 1983**

[52] U.S. Cl. D23/40

[58] Field of Search D23/40; 285/13, 42, 285/46, 178, 93; 73/323; D8/384, 385

[56] **References Cited**

U.S. PATENT DOCUMENTS

999,332	8/1911	Mueller	285/46
1,039,315	9/1912	Mueller	285/46
2,471,708	5/1949	White	285/178 X
3,276,488	10/1966	Holmes	73/323 UX
4,211,423	7/1980	Reesch	285/42 X
4,306,738	12/1981	Lindquist	285/42 X

FOREIGN PATENT DOCUMENTS

1422846	1/1976	United Kingdom	285/46

OTHER PUBLICATIONS

"Funnel Connection"-S. B. Hubbard Co. Catalogue #71, 1943, p. 484.

Dzus Fast Fastening Catalogue, p. 17-Stud Retainer-Type GA.

E. B. Stimpson Co. Catalogue, p. 5-Eyelet-#A1400.

Townsend Perma-Pull Fasteners Catalogue, p. 2, Std. Counter Sink Fastener #9.

Townsend Fastening Systems Catalogue, p. 1, item "A".

Primary Examiner—Wallace R. Burke

Assistant Examiner—Brian N. Vinson

Attorney, Agent, or Firm—Young & Thompson

[57] **CLAIM**

The ornamental design for a sealing apparatus for surrounding the point of emergence of a pipe from a wall or floor, as shown and described.

DESCRIPTION

FIG. 1 is a top perspective view of a sealing apparatus for surrounding the point of emergence of a pipe from a wall or floor showing my new design;

FIG. 2 is a bottom perspective view thereof;

FIG. 3 is a front elevational view of a portion of the apparatus, the opposite portion being omitted for ease of illustration;

FIG. 4 is a rear elevational view thereof;

FIG. 5 is a side elevational view thereof.

The two halves constituting the assembled device shown in FIGS. 1 and 2, one of which is shown in FIGS. 3-6, are identical to each other.

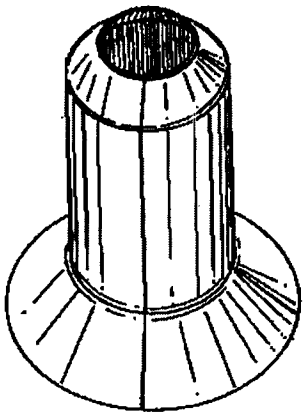

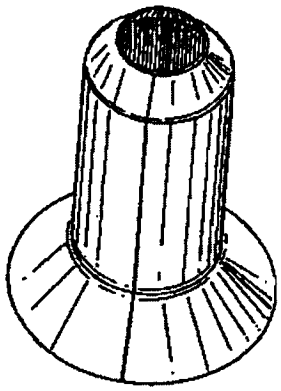

FIG.1

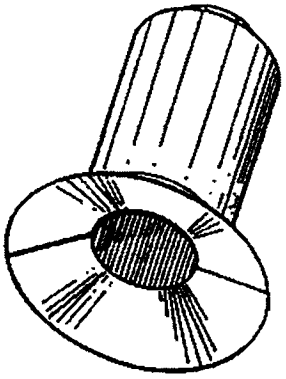

FIG. 2

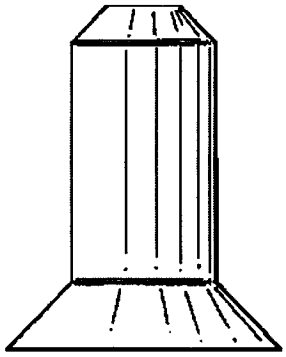

FIG. 3

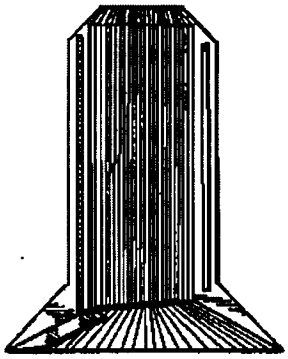

FIG. 4

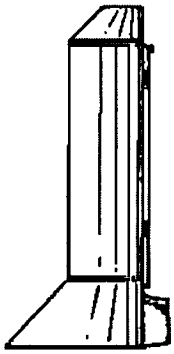

FIG. 5

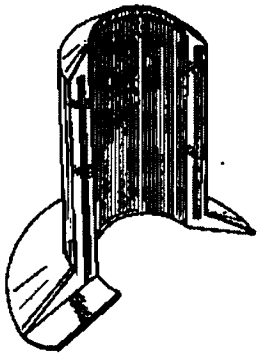

FIG. 6

F. E. SHAW.

ROOF FLASHING.

APPLICATION FILED FEB. 17, 1909.

917,167. Patented Apr. 6, 1909.

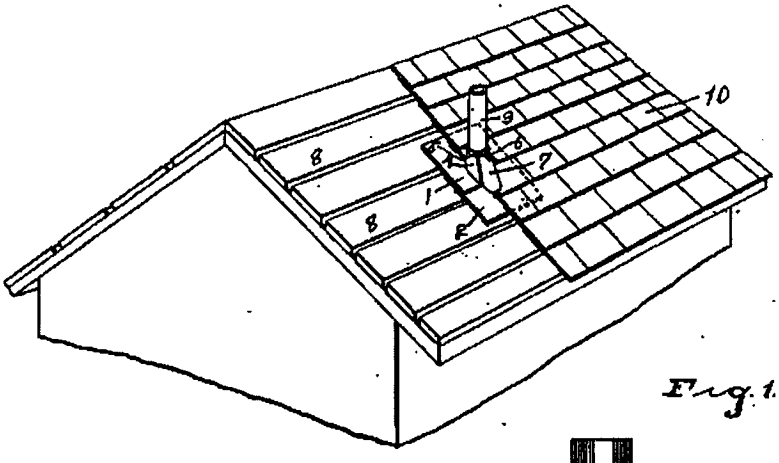

Fig. 1.

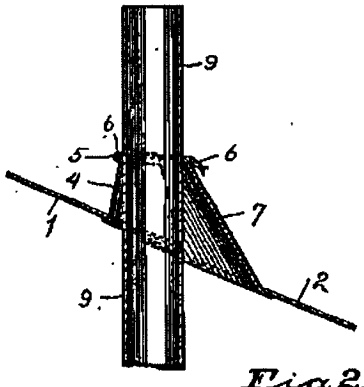

Fig. 2.

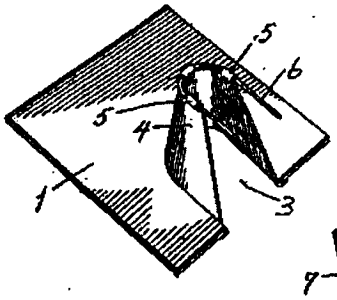

Fig. 3.

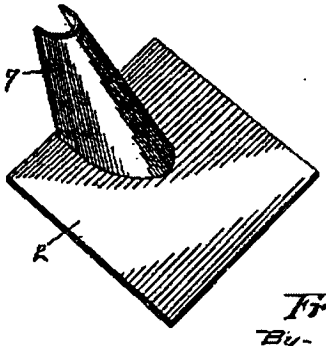

Fig. 4.

Witnesses

Carl Stoughton

J. B. Adams

Inventor

Frank E. Shaw

By C. C. Shepherd

Attorney

THE NORRIS PETERS CO., WASHINGTON, D. C.

UNITED STATES PATENT OFFICE.

FRANK E. SHAW, OF COLUMBUS, OHIO, ASSIGNOR OF ONE-HALF TO JOSEPH F. TREDWAY AND ONE-HALF TO WALTER KLIE, OF COLUMBUS, OHIO.

ROOF-FLASHING.

No. 917,167. Specification of Letters Patent. Patented April 6, 1909.

Application filed February 17, 1908. Serial No. 416,218.

To all whom it may concern:

Be it known that I, FRANK E. SHAW, a citizen of the United States, residing at Columbus, in the county of Franklin and State of Ohio, have invented certain new and useful Improvements in Roof-Flashing, of which the following is a specification.

My invention relates to the improvement of roof flashing of that class which is adapted to be employed on a building roof about pipes which pass through said roof and the objects of my invention are to provide a simple and inexpensive flashing of this class by means of which the interstices in a roof structure which ordinarily occur adjacent to the surface of a pipe passing through the roof, will be closed against the admission of water; to so construct my improved device as to admit of its being used on roofs of different inclinations and to produce other improvements which will be more fully pointed out hereinafter. These objects I accomplish in the manner illustrated in the accompanying drawing, in which:

Figure 1 represents a building roof having my improved flashing in use thereon and showing for the sake of clearness in illustration a portion of the roofing slats broken away, Fig. 2 is a central vertical section through my device, and through a roof pipe about which said flashing is clamped, Fig. 3 is a view in perspective of one section of my improved flashing, and, Fig. 4 is a similar view of the remaining section.

Similar numerals refer to similar parts throughout the several views.

In carrying out my invention, I employ two metallic flashing plates 1 and 2. In the construction of what I will term the upper section of my device, I form in the outer and lower edge of the plate 1 an inwardly extending recess or pocket 3 which is rounded at its inner end. Rising from the upper face of the plate 1 about this recess is a half sleeve or shield section 4, this half shield or sleeve section inclining or tapering slightly toward its upper open end and having its parallel forward edge portions inclined rearwardly from the forward edge of the plate 1. Formed with the upper curved end of the shield section 4 at suitable intervals are outwardly and thence inwardly bent ears 5 forming wire supports or keepers through which passes the central portion of a binding or clamping wire. In forming the second and what I will term the lower section of my device, I provide the plate 2 with a recess in its upper edge, similar to the recess 3 of the plate 1 and rising from about this recess is a curved shield section 7, the latter being inclined outward over the mouth of the plate recess and also being tapered toward its upper end.

In utilizing my improved flashing, the plate section 2 is nailed or otherwise suitably secured to a roof frame such as is indicated at 8, so that the body of said plate is below a ventilating or other pipe 9 which extends through said roof frame and in such position that the inclined shield projection 7 has its outer curved end embracing a portion of the pipe 9. The plate 1 is then secured to the roof frame so that the major portion of said plate is above the pipe and the remainder on opposite sides thereof, the shield projection 4 of the plate 1 thus being made to embrace both that portion of the pipe which is not embraced by the end of the shield 7 and also to embrace or receive a portion of said shield 7. When the shield projection 7 of the plate 2, is thus partially telescoped within the shield projection 4, the lower portion of the plate 1 overlaps the upper portion of the plate 2. The plates being thus secured to the roof frame, the projecting end portions of the wire 6 which extend on opposite sides of the upper portion of the shield projection 7, are twisted together on the outer side of the upper end portion of said shield projection 7 until the upper curved ends of the shield projections are drawn into close weather-proof contact with the periphery of the pipe 9. This being accomplished, the roofing shingles which in the drawing are indicated at 10, are secured in the usual manner upon the framework and made to cover the exposed portions of the plates 1 and 2. Owing to the fact that the shield sections of the two plates are so shaped as to fit snugly one within the other and the further fact that the upper ends of said shield sections are by means of the twisted wire 6 drawn into close contact with the pipe, it will readily be understood that the tendency of rain to follow the pipe downward through the roof frame, will be obviated.

It will be understood that pipes of slightly varying sizes may be engaged in the man-

ALP00301

ner above described, by flashing sections of one size, but that in case the flashing is to be used in connection with unusually small or large pipes, said sections may be constructed of convenient sizes for such use. It will also be understood that a roof flashing such as I have described, may be readily employed on roofs of different inclinations inasmuch as the cheap metal of which the flashing projections are formed, is sufficiently pliable to admit of the upper ends of said flashing projections being drawn into proper engagement with the pipe.

What I claim, is:

In a roof flashing, the combination with a pair of base plates, of tapering sleeves rising from said plates, one of said sleeves being adapted to enter the other of said sleeves and one of said plates being adapted to overlap the other of said plates, said sleeves being adapted, when drawn together, to encircle a pipe, one of said sleeves overhanging the front edge of the plate by which it is carried and the edges of the other sleeve slanting away from the front edge of the plate by which it is carried in such manner that the joint between the said sleeves is not a vertical one, and means for drawing the upper edges of said sleeves into close contact with the pipe passing therethrough, said means comprising a wire and a plurality of integral ears bent outwardly from the upper edge of one of the sleeves and around the bight of said wire, the ends of said wire being twisted into engagement with each other to bind said sleeves about said pipe.

In testimony whereof I affix my signature in presence of two witnesses.

FRANK E. SHAW.

Witnesses:

A. L. Phelps,

L. Carl Stoughton.

ALP00302

May 23, 1961 H. S. CHURCH 2,985,465

ROOF FLANGE CONSTRUCTION

Filed Dec. 20, 1957 2 Sheets-Sheet 1

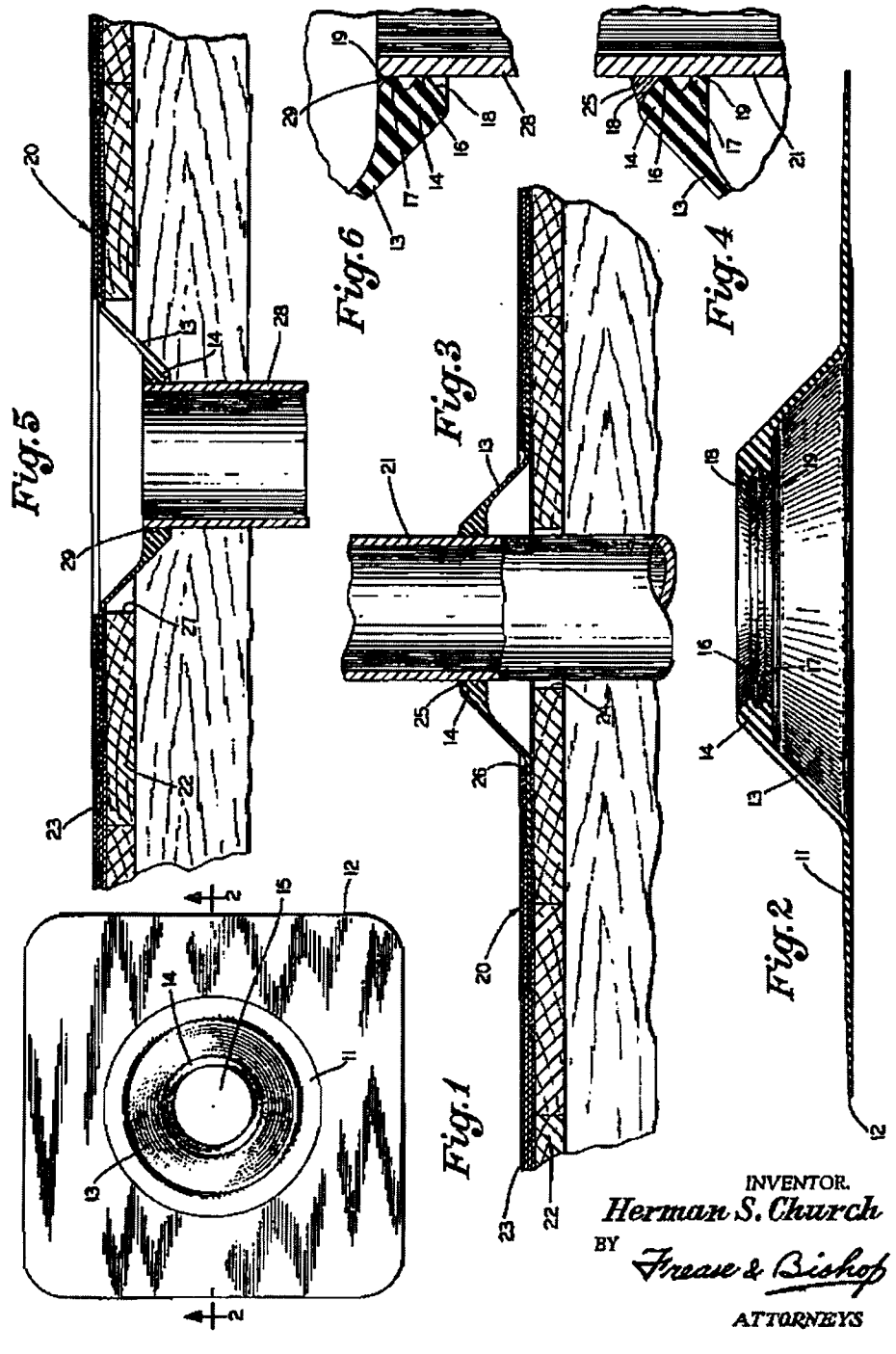

INVENTOR.
Herman S. Church
BY
Frease & Bishop
ATTORNEYS

ALP00294

May 23, 1961 H. S. CHURCH 2,985,465

ROOF FLANGE CONSTRUCTION

Filed Dec. 20, 1957 2 Sheets-Sheet 2

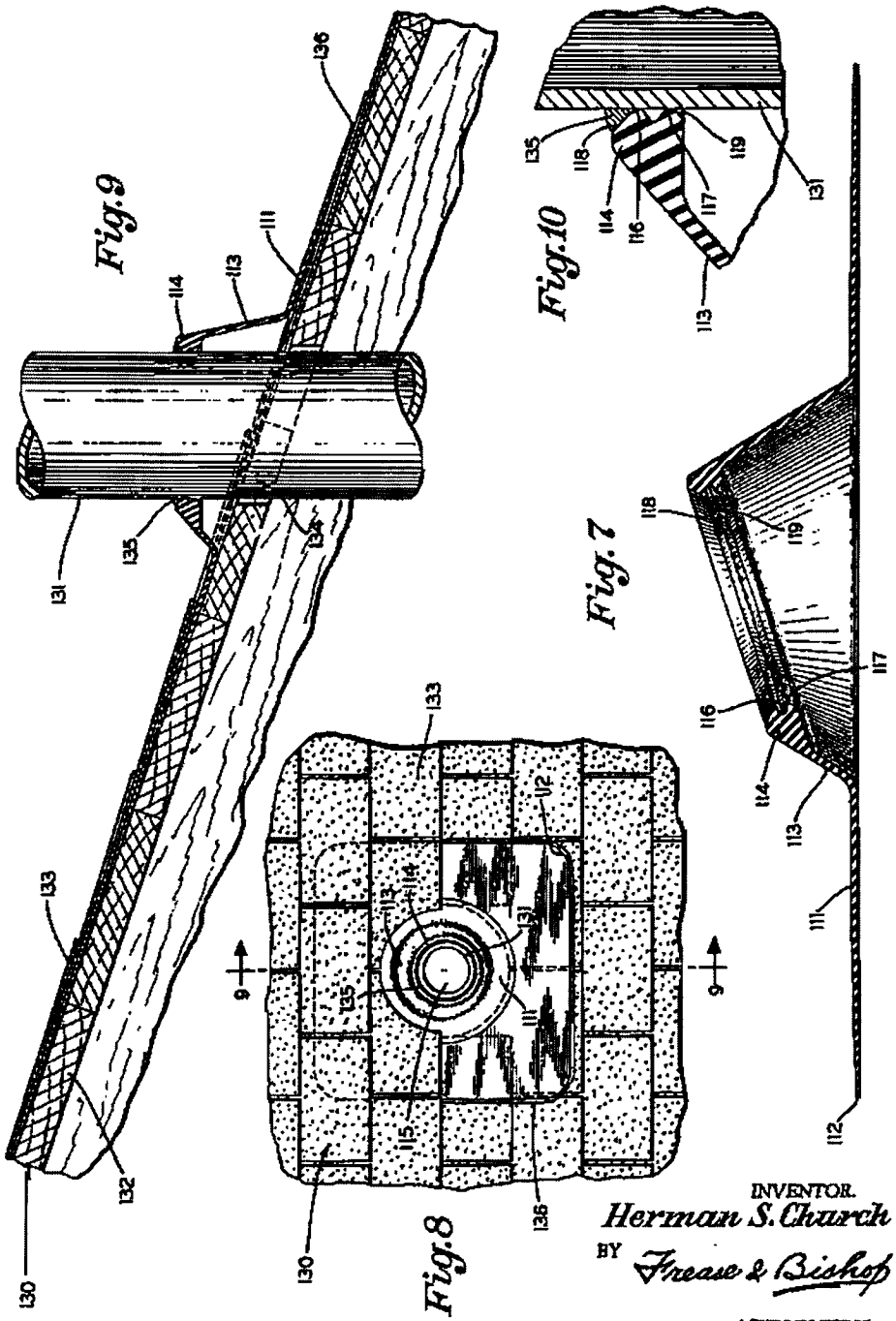

ALP00295

United States Patent Office

2,985,465

Patented May 23, 1961

1

2,985,465

ROOF FLANGE CONSTRUCTION

Herman S. Church, Cuyahoga Falls, Ohio, assignor to The Monarch Rubber Company, Hartville, Ohio, a corporation of Ohio

Filed Dec. 20, 1957, Ser. No. 704,113

4 Claims. (Cl. 285—42)

My invention relates generally to improvements in roof flange constructions of the type for providing a waterproof and weatherproof seal between the roof of a building structure and a pipe, such as a vent pipe, protruding therethrough.

The most generally used prior construction of roof flange which has been used in building structures for the foregoing purpose has been formed completely of metal and generally lead. This prior roof flange construction has usually included a flat plate portion secured to the roof and having a necked portion formed centrally thereof to be telescoped over the pipe protruding through the roof, with both the plate portion and neck portion being sealed to the roof and pipe by any usual roofing compound sealing means.

One major difficulty with this prior construction of metal roof flange is that it is difficult to provide a thorough and lasting seal between both the metal plate portion and the roof and the metal neck portion and the metal pipe, since slight irregularities in the roof sheeting and the pipe receiving the neck portion, due to the stiffness of the metal, cause large voids which must be thoroughly filled and sealed requiring skilled workmen to properly accomplish this sealing operation. A further factor which complicates this problem is that the vent pipes are frequently formed of cast iron and, during the formation thereof, a close outer circumference tolerance is not maintained so that there can be variations as much as one-quarter inch in diameter at the outer circumference of the pipe.

Thus for practical production of these metal roof flanges, it is necessary to provide the inside diameter of the necked portions thereof sufficiently large to receive even the largest diameter pipe that might be used. When, however, a pipe is encountered which has the minimum outside diameter, that is, one-quarter inch less, the problem of sealing between the pipe and this neck portion becomes considerably more troublesome.

Still another problem involved in the use of these prior metal roof flanges is caused by the fact that the plate portion thereof is sealing against a wooden roof and the neck portion is sealing against a metal pipe, which metal pipe has a different thickness and is formed of a different metal than this neck portion. For this reason, under changing temperature conditions, the roof, roof flange and pipe will all be affected by different rates of expansion and contraction so that it is difficult, if not impossible, to maintain a proper water-tight and weatherproof seal between the roof flange, the roof and the pipe, even though the sealing means therebetween is a somewhat plastic material.

Finally another problem involved in the use of these prior roof flange constructions is that these prior roof flanges, being formed of metal, are difficult to adapt to the great number of different pitches of roofs encountered in modern home and building construction. Thus it is necessary to provide a large number of different configurations of these roof flanges in order to be able to supply

2

the particular roof flange for the particular pitch of roof.

It is therefore a general object of the present invention to provide a roof flange construction which overcomes the difficulties and disadvantages encountered in use of the prior constructions.

It is a primary object of the present invention to provide a roof flange construction which can be easily and conveniently installed for sealing between a roof and vent pipe extending through the roof and which does not require any special skill for the installation thereof.

It is a further object of the present invention to provide a roof flange construction which is completely flexible and will readily adapt for changing temperature conditions while still maintaining an efficient seal.

It is still a further object of the present invention to provide a roof flange construction which is formed with special sealing means for sealing around the pipe extending through the roof which roof flange will automatically adapt for various size pipe within reasonable tolerances.

It is also an object of the present invention to provide a roof flange construction for sealing around a pipe extending through a roof which may be used for various pitches of roofs within reasonable limits thereby requiring a lesser number of specific shapes of these roof flanges to be carried by a supplier thereof.

It is an additional object of the present invention to provide a roof flange construction for sealing between a roof and a pipe extending therethrough, which roof flange may also be used for providing waterproof connection and efficient seal between a flat roof and the roof drain-pipes thereof.

Finally it is an object of the present invention to provide a roof flange construction which accomplishes all of the above objects and provides all of the above advantages, yet may be manufactured and supplied at a minimum of expense.

These and other objects are accomplished by the parts, constructions, arrangements, combinations and subcombinations comprising the present invention, the nature of which is set forth in the following general statement, preferred embodiments of which—illustrative of the best mode in which applicant has contemplated applying the principles—are set forth in the following description and illustrated in the accompanying drawings, and which are particularly and distinctly pointed out and set forth in the appended claims forming a part hereof.

In general terms the roof flange construction comprising the present invention may be stated as including a substantially flat flexible flange portion having a preferably generally rectangular outer configuration and terminating inwardly in a flexible neck portion extending away from the flange portion. Both the flange and neck portions are relatively thin, with the flange portion preferably tapering to a feather edge at its outer edges.

The neck portion terminates spaced from the flange portion in seal means, preferably having a greatly increased cross-sectional thickness from the cross-sectional thickness of either the neck or flange portions. Further this seal means terminates inwardly in two spaced inwardly projecting sealing lips which are adapted to surround and seal against the outer circumference of a pipe.

Still further each of the sealing lips is preferably triangular in cross section tapering inwardly to an apex and these sealing lips are positioned at the upper and lower extremities of the seal means so that one of the tapered side portions of each of these sealing lips forms the inner extremity of the upper and lower extremities of this seal means. Thus a downwardly angled void is formed between the upper sealing lip and the outer circumference of a pipe against which this lip is sealing and an upwardly angled void is formed between the lower sealing lip and a pipe against which this lip is sealing.

either of which voids may be filled with a plastic roofing compound sealing material for aiding in sealing between the pipe and seal means.

By way of example, embodiments of the roof flange construction of the present invention are illustrated in the accompanying drawings forming a part hereof, wherein like numerals indicate similar parts throughout the several views, and in which:

Fig. 1 is a top plan view of the first embodiment of the roof flange construction comprising the present invention;

Fig. 2, a sectional view, part in elevation, looking in the direction of the arrows 2—2 in Fig. 1;

Fig. 3, a vertical sectional view, part in elevation, showing the roof flange construction of Figs. 1 and 2 installed for sealing between a flat roof and a vent pipe extending therethrough;

Fig. 4, an enlarged fragmentary sectional view taken from Fig. 3 and showing the area of the seal between the roof flange and the pipe;

Fig. 5, a vertical sectional view, part in elevation, showing the roof flange construction of Figs. 1 and 2 installed sealing between a flat roof and a drainpipe of said roof;

Fig. 6, an enlarged fragmentary sectional view taken from Fig. 5 showing the area of the seal between the roof flange and the pipe;

Fig. 7, a vertical sectional view of a second embodiment of the roof flange construction comprising the present invention;

Fig. 8, a top plan view showing the roof flange construction of Fig. 7 installed on a roof and sealing between a roof and vent pipe extending therethrough;

Fig. 9, a sectional view, part in elevation, looking in the direction of the arrows 9—9 in Fig. 8; and

Fig. 10, an enlarged fragmentary sectional view taken from Fig. 9 and showing the area of the seal between the roof flange and the pipe.

The first embodiment of the roof flange construction comprising the present invention is shown in Figs. 1 and 2 and includes a substantially flat flange portion 11, preferably having a rectangular outer edge 12. Further flange portion 11 terminates inwardly and preferably central thereof in a neck portion 13 which angles inwardly and upwardly away from the flange portion.

Still further the neck portion 13 terminates upwardly, spaced above the flange portion 11, in a sealing portion 14 with this sealing portion terminating inwardly in a predetermined size of opening 15. The entire roof flange construction is formed from a flexible material which may be rubber or one of the synthetic rubber compositions, but it is preferred that this material is neoprene for its oil, acid and sun-checking resistance.

Flange portion 11, in cross section, may be formed of a steadily decreasing width outwardly and tapers to a so-called feather edge at outer edge 12. The maximum thickness of flange portion 11 is at the point of connection between this flange portion and the neck portion 13, with the neck portion 13 having approximately the same cross-sectional thickness as the maximum thickness of flange portion 11.

Both flange portion 11 and neck portion 13 are, however, relatively thin, as shown, for maximum flexibility, with the sealing portion 14 having a greatly increased thickness in the order of between two and six times the thickness of neck portion 13. Thus the sealing portion 14 is of greatly increased mass over any given section of the flange portion 11 and neck portion 13 and this sealing portion therefore protrudes inwardly from the neck portion 13 terminating preferably in a circular opening 15.

Sealing portion 14 at opening 15 is provided with an upper sealing lip 16 and lower sealing lip 17 with both of these sealing lips being substantially triangular in cross section having their apices at the opening 15 and increasing in width outwardly. The lower side of the upper sealing lip 16 and the upper side of the lower sealing lip 17 angle upwardly and downwardly respectively, as best

seen in Fig. 2, so that these two sealing lips may be compressed outwardly without interference from each other.

Further the upper sealing lip 16 angles outwardly to the upper extremity of sealing portion 14, thus forming the angled portion 18 at the top of the sealing portion. Finally the lower sealing lip 17 angles outwardly and downwardly to the lower extremities of the sealing portion 14 forming the angled portion 19 at the lower edge of the sealing portion.

As shown in Figs. 1 and 2, the first embodiment of the roof flange construction has the axis of the opening 15 at right angles to the plane of the flange portion 11 so that the plane of the upper extremities of the sealing portion 14 is generally parallel to the plane of the flange portion 11. Thus this particular embodiment is adapted for use with a flat roof or a roof having only a slight pitch.

As an example, for showing the increased mass of the sealing portion 14 over the neck portion 13, the neck portion may have a thickness of about 1/4 inch while the sealing portion 14 at its minimum thickness, that is, the depression formed between the sealing lip 16 and sealing lip 17 may be about 3/8 inch. Furthermore with these dimensions the thickness of the sealing portion at the apex of the upper sealing lip 16 will be about 7/16 inch and at the apex of the lower sealing lip 17 about 5/8 inch, with this sealing portion 14 having substantially the same dimensions throughout its circumference because of the axis of the opening 15 extending at right angles to the plane of the flange portion 11.

As shown in Fig. 3, the first embodiment of the roof flange construction may be installed for providing a waterproof and weatherproof seal between a flat roof, generally indicated at 20, and a vent pipe, generally indicated at 21. The flat roof 20 may be formed of a layer of wood sheathing 22 and a series of layers 23 of asphalt impregnated and coated roofing material of usual construction.

The vent pipe 21 is usually a cast-iron pipe having an outside diameter varying from about four inches to about four and one-quarter inches, and extends upwardly through the roof 20 through an opening 24. Further the outer surface of the pipe 20 may range from relatively smooth to extremely rough.

The roof flange construction of the present invention is preferably installed by first applying the initial layer of roofing material 23 on the wood sheathing 22 and then telescoping the sealing portion 14 of the roof flange construction over the pipe 21 until the flange portion 11 is lying flat on this first layer of roofing material 23. An asphalt roof sealing compound may be placed between the flange portion 11 and the first layer of roofing material 23 if desired, but under most circumstances an excellent seal will be provided between these materials and also the additional layers of roofing materials 23 merely by the asphalt coating on this roofing material adhering to and sealing with the flange portion 11.

The sealing lips 16 and 17 on the roof flange construction are preferably formed with inside diameters of 3 15/16 inches, that is, 1/16 inch less than the possible minimum outside diameter of the pipe 21, so that when the sealing portion 14 is telescoped over pipe 21, a compression is provided therebetween compressing the apices of the sealing lips 16 and 17 and providing a tight seal between these sealing lips and the pipe 21. This compression between the sealing portion 14 and the pipe 21 is insured and maintained indefinitely due to the greatly increased thickness or mass of this sealing portion 14 as hereinbefore described and shown.

The void formed around the pipe 21 between the angled portion of the roof flange and this pipe is filled with a usual asphalt roofing compound shown at 25 and in enlarged view in Fig. 4, thereby completing the seal between pipe 21 and the sealing portion 14 of the roof flange. Finally asphalt roofing compound may be applied between the overlying layers of roofing material 23 and the flange portion 11 of the roof flange as shown

at 26 to provide a more efficient seal at this point and prevent moisture from working back between the flange portion 11 and the layers of roof material 23.

As shown in Figs. 5 and 6, this first embodiment of the roof flange construction comprising the present invention may also be used for providing a seal between a flat roof and a drainpipe, such pipe being used for draining water from the roof. As shown in Fig. 5, the roof flange construction is installed in a similar manner except that the neck portion 13 extends downwardly rather than upwardly.

Thus the flange portion 11 is positioned between the layers of roofing material 23 of the flat roof 20 and above the wood sheathing 22, but the neck portion 13 extends through a larger opening 27 and projects downwardly below the wood sheathing 22.

The drainpipe 28 similarly is telescoped by the sealing portion 14 so that the sealing lips 16 and 17 provide a seal against this drainpipe. Finally, since the angled portion 19 of sealing lips 17 is exposed upwardly, the void formed by the angled portion 19 and the pipe 28 is filled with the roofing compound, as shown at 29, with this seal between sealing portion 14 and pipe 28 being shown in enlarged view in Fig. 6.

The second embodiment of the roof flange construction comprising the present invention is shown in Fig. 7 and is very similar to the first embodiment with the exception that it is adapted for sealing between a vent pipe and a roof having more than just a slight pitch. The only change required from the first embodiment construction, for providing this second embodiment construction, is that the plane of the upper extremities of the sealing portion does not extend in a plane parallel to the plane of the flange portion, but rather these planes extend at an angle, the degree of which depends on the pitch of the roof.

Referring to Fig. 7, similar to the first embodiment, the roof flange construction includes the flange portion 111 tapering outwardly to the feather edge 112 and terminating inwardly in the upwardly and inwardly angled neck portion 113. Further neck portion terminates upwardly in the sealing portion 114, with this sealing portion terminating inwardly at the opening 115 and having the upper sealing lip 116 and lower sealing lip 117.

Sealing lips 116 and 117 are similarly formed with sealing lip 116 angling upwardly to the upper extremities of the sealing portion 114 forming the angled portion 118 and the lower sealing lip 117 angling downwardly to the lower extremities of the sealing portion to form the angled portion 119. Finally, flange portion 111 and neck portion 113 are formed relatively thin, whereas the sealing portion 114 is formed of increased thickness and having a minimum thickness in the order of two times that of the neck portion 113 to provide a greater mass of material behind the sealing lips 116 and 117 and insure the proper sealing thereof.

Thus, the sealing portion 114 again may have a thickness of between about two and about six times the thickness of the neck portion 113, and as an example of the dimensions, the thickness of the neck portion 113 may again be ⅛ inch with the minimum thickness of the sealing portion 114, that is, between the sealing lips 116 and 117 being about ¼ inch at the right-hand side of the sealing portion as shown in Fig. 7, with this minimum thickness increasing to about ⅜ inch at the left-hand side as shown in Fig. 7. This variation in thickness of the sealing portion 114 is, of course, caused by the fact that the axis of the opening 115 does not extend perpendicularly to the plane of the flange portion 111 so that the plane of the upper extremities of the sealing portion 114 extends at an angle to the plane of the flange portion 111, as shown.

Further, in the above example the thickness of the sealing portion 114 at the apex of the upper sealing lip 116 is about 7/16 inch throughout the circumference of this sealing lip. Finally the minimum thickness of the sealing portion at the apex of the lower sealing lip 117 is about ⅛ inch, as shown at the right-hand side of Fig. 7, with the maximum thickness at this point being about 5/16 inch, as shown at the left-hand side of Fig. 7.

As shown in Figs. 8, 9 and 10, this second embodiment of the roof flange construction is applied to the roof, generally indicated at 130, surrounding and providing a waterproof and weatherproof seal between this roof and the vent pipe 131. In this case, however, the roof 130 is formed from the usual wood sheathing 132 covered with the usual overlapped asphalt shingles 133, with the vent pipe 131 extending through the opening 134 in the wood sheathing and shingles.

The same relationship of sizes between the outer diameter of the vent pipe 131 and the inner diameter of the sealing lips 116 and 117 is provided in this second embodiment as was provided in the first embodiment, that is, the inner diameter of the sealing lips being less than the minimum possible outer diameter of the vent pipe 131 to provide compression between these sealing lips and the vent pipe thereby insuring sealing therebetween. Furthermore the usual asphalt roofing compound is applied at 135 filling the void formed between the angled portion 118 of the sealing portion 114 and the vent pipe 131, thereby completing the seal betwen sealing portion 114 and the vent pipe, such completed seal being shown in enlarged view in Fig. 10.

This second embodiment of the roof flange construction is preferably applied during the application of the shingles 133 to the wood sheathing 132 with the upper half of the flange portion 111 underlying the shingles 133 and the lower half of this flange portion overlying these shingles, as shown. Finally roofing compound may be applied between the edge 112 of flange portion 111 and the shingles 133 where this flange portion overlies the shingles and is therefore exposed, such roofing compound being indicated at 136 in Figs. 8 and 9.

It is important for the purposes of the present invention to provide the flange portion 11 or 111 and the neck portion 13 or 113 relatively thin to obtain maximum flexibility of these portions so that the roof flange construction may conform to the particular roof upon which it is being applied. For instance, as shown in the second embodiment, the pitch of the roof 130 can obviously vary considerably and the flange portion and neck portion 113 will still easily conform to this different pitch of roof. Also, a proper and sufficient seal will still be provided between the sealing portion 114 and any vent pipe 131.

Further, it is important for the purposes of the present invention that the sealing portion 14 or 114 are formed of increased thickness providing an increased resilient mass at this point over the thickness of the neck portion 113. With this increased mass of the sealing portions an increased resistance to deformation is provided backing up the sealing lips 16 and 17 or 116 and 117, thereby insuring an efficient seal between these sealing lips and the particular vent pipes around which they are sealing.

Still further it is advantageous to provide the angled portion 35 or 135 at the upper extremities of the sealing portion 14 or 114 so that the voids formed between these angled portions and the vent pipes can be filled with roofing compound to insure a more complete and lasting seal. It is also advantageous to provide the angled portion 19 or 119 at the lower extremities of the sealing portion 14 or 114 so that this roof flange construction is adaptable for merely being reversed to provide a seal between a roof and a drainpipe from the roof.

Additionally, it is advantageous to taper the flange portion 11 or 111 outwardly and terminate these flange portions in a feather edge 12 or 112 for increased flexibility of the flange portions and for more efficient sealing of the edges against the particular roof. Finally, since the entire roof flanges of the first and second em-

bodiments are formed of one piece and totally of resilient material, these roof flanges will automatically compensate for any differences in expansion and contraction between the various materials while still maintaining a waterproof and weatherproof seal.

In the foregoing description, certain terms have been used for brevity, clearness and understanding, but no unnecessary limitations are to be implied therefrom, because such words are used for descriptive purposes herein and are intended to be broadly construed.

Moreover, the embodiments of the improved construction illustrated and described herein are by way of example and the scope of the present invention is not limited to the exact details of the construction shown.

Having now described the invention, the construction, operation and use of preferred embodiments thereof, and the advantageous new and useful results obtained thereby, the new and useful construction and reasonable mechanical equivalents thereof obvious to those skilled in the art are set forth in the appended claims.

I claim:

1. Roof flange construction for providing a seal between a roof and a pipe positioned at an opening of the roof including a substantially flat resilient material flange portion, the flange portion surrounding and terminating inwardly in an integral resilient material tubular neck portion, the neck portion extending from the flange portion and terminating spaced from said flange portion in an integral resilient material sealing portion, the sealing portion having an opening formed therethrough, the sealing portion having resilient material sealing lip means including spaced upper and lower inwardly tapered sealing lips formed thereon and extending inwardly of the sealing portion surrounding said opening for resiliently sealing against a pipe received in the opening, the sealing lip means upper sealing lip having an angled upper side surface angling downwardly and inwardly toward the opening forming a void between the sealing portion and the pipe received in said opening, the sealing lip means lower sealing lip having an angled lower side surface angling upwardly and inwardly toward the opening forming a void between the sealing portion and the pipe received in said opening, at least one of said voids being adapted for being filled with a plastic roofing compound to increase the seal between the sealing portion and the pipe, and the minimum thickness of the sealing portion at least in outward alignment with the sealing lip means upper and lower sealing lips being greater than the maximum thickness of the neck and flange portions for providing an increased mass to back up and retain the lip means resiliently sealed against the pipe.

2. Roof flange construction for providing a seal between a roof and a pipe positioned at an opening of the roof including a substantially flat resilient material flange portion, the flange portion surrounding and terminating inwardly in an integral resilient material tubular neck portion, the neck portion extending from the flange portion and terminating spaced from said flange portion in an integral resilient material sealing portion, the sealing portion having an opening formed therethrough, the sealing portion having resilient material sealing lip means including spaced upper and lower inwardly tapered sealing lips formed thereon and extending inwardly of the sealing portion surrounding the opening and resiliently sealing against a pipe received in said opening, the sealing lip means upper sealing lip having an angled upper side surface angling downwardly and inwardly toward the opening forming a void between the sealing portion and the pipe received in said opening, the sealing lip means lower sealing lip having an angled lower side surface angling upwardly and inwardly toward the opening forming a void between the sealing portion and the pipe received in said opening, and at least one of said voids being adapted for being filled with a plastic roofing compound to increase the seal between the sealing portion and the pipe.

3. Roof flange construction for providing a seal between a roof and a pipe positioned at an opening of the roof including a substantially flat resilient material flange portion, the flange portion surrounding and terminating inwardly in an integral resilient material tubular neck portion, the neck portion extending from the flange portion and terminating spaced from said flange portion in an integral resilient material sealing portion, the sealing portion having an opening formed therethrough, the sealing portion having spaced upper and lower resilient material sealing lip means formed thereon and extending inwardly of the sealing portion surrounding the opening for resiliently sealing against a pipe received in said opening, the upper sealing lip means having an angled upper side surface angling downwardly and inwardly toward the opening forming a void between the sealing portion and the pipe received in said opening, the lower sealing lip means having an angled lower side surface angling upwardly and inwardly toward the opening forming a void between the sealing portion and the pipe received in said opening, at least one of said voids being adapted for being filled with a plastic roofing compound to increase the seal between the sealing portion and the pipe, and the minimum thickness of the sealing portion at least in outward alignment with the upper and lower sealing lip means being at least double the maximum thickness of the neck and flange portions for providing an increased mass to back up and retain the lip means resiliently sealed against the pipe.

4. Roof flange construction for providing a seal between a roof and a pipe positioned at an opening of the roof including a substantially flat resilient material flange portion, the flange portion terminating outwardly in a substantially feather edge, the flange portion surrounding and terminating inwardly in an integral resilient material tubular neck portion, the neck portion extending from the flange portion and terminating spaced from said flange portion in an integral resilient material sealing portion, the sealing portion having an opening formed therethrough, the sealing portion having resilient material sealing lip means including spaced upper and lower inwardly tapered sealing lips formed thereon and extending inwardly of the sealing portion surrounding the opening and resiliently sealing against a pipe received in said opening, the sealing lip means upper sealing lip having an angled upper side surface angling downwardly and inwardly toward the opening forming a void between the sealing portion and the pipe received in said opening, the sealing lip means lower sealing lip having an angled lower side surface angling upwardly and inwardly toward the opening forming a void between the sealing portion and the pipe received in said opening, and at least one of said voids being adapted for being filled with a plastic roofing compound to increase the seal between the sealing portion and the pipe.

References Cited in the file of this patent

UNITED STATES PATENTS

558,025	Barry	Apr. 14, 1896
580,515	Weeden	Apr. 13, 1897
738,662	Cram	Sept. 8, 1903
1,282,535	Bropson	Oct. 22, 1918
1,317,574	Groswold	Sept. 30, 1919
1,442,172	Nelson	Jan. 16, 1923
1,512,672	Blanwelt	Oct. 21, 1924
1,831,839	Blaski	Nov. 17, 1931
1,844,870	Helling	Feb. 9, 1932
2,581,817	Simmer	Jan. 8, 1952
2,742,323	Shey	Apr. 17, 1956
2,853,330	Harry	Sept. 23, 1958

FOREIGN PATENTS

511,895	Belgium	June 30, 1952

United States Patent

Didszuhn

[15] **3,704,894**

[45] **Dec. 5, 1972**

[54] **BELLOWS SLEEVE**

[72] Inventor: **Wolfgang Didszuhn,** Weckenweg 44, 8081 Oberhaunstadt, Germany

[22] Filed: **Nov. 1, 1971**

[21] Appl. No.: **194,670**

[30] **Foreign Application Priority Data**

Nov. 4, 1970 Germany.....P 20 54 207.8

[52] **U.S. Cl.**.....**277/212 FB, 287/85, 277/199**

[51] **Int. Cl.**.....**F16J 3/00**

[58] **Field of Search**.277/199, 212, 212 FB; 285/226, 285/228, 235, 236, 237; 287/85

[56] **References Cited**

UNITED STATES PATENTS

3,231,289	1/1966	Carrell	277/199
3,166,333	1/1965	Henley	277/199

FOREIGN PATENTS OR APPLICATIONS

1,209,375	1/1966	Germany	277/212 FB

Primary Examiner—Joseph R. Leclair
Assistant Examiner—Robert L. Smith
Attorney—W.G. Fasse

[57] **ABSTRACT**

The bellows sleeve is provided with a slot extending at least partially and longitudinally there through. Adjacent to the slot there are provided flanges which comprise one or more tongues with a wedge shaped cross-section as well as wedge-shaped grooves into which the tongues fit. The flanges are clamped together, for example, by means of screws extending with a press fit through bores in respective material accumulations or lands provided in one of the flanges and respective recesses into which the lands fit in the other flange. Preferably, the lands fit into the recesses also with a press fit.

12 Claims, 4 Drawing Figures

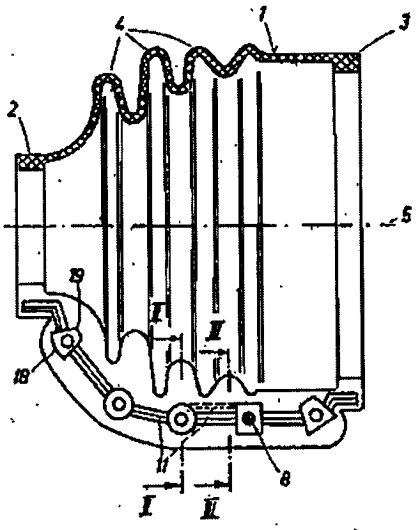

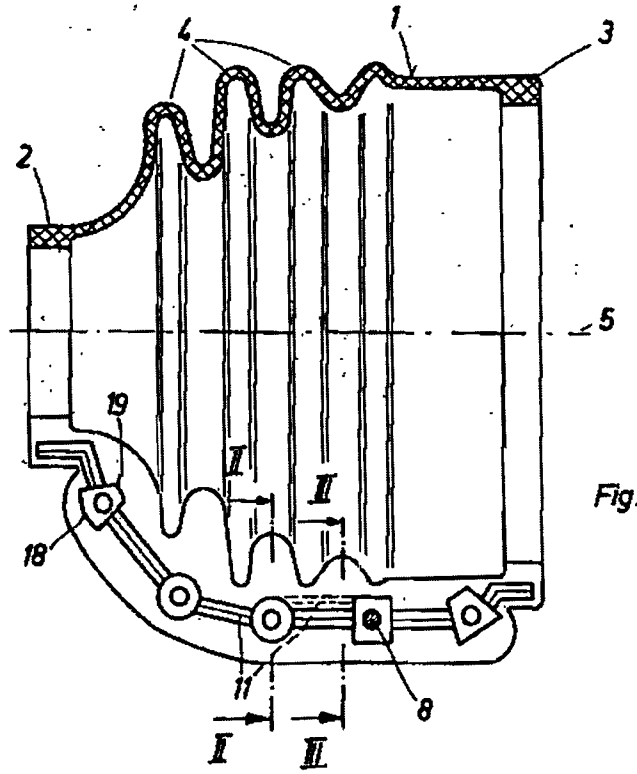

Fig. 1

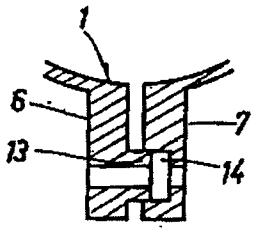

Fig. 2

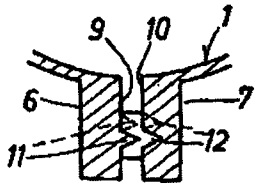

Fig. 3

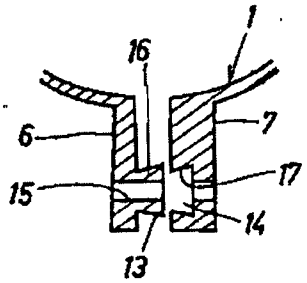

Fig. 4

BELLOWS SLEEVE

BACKGROUND OF THE INVENTION

The present invention relates to so called bellows sleeves employed for sealing purposes between moving parts. More specifically, the invention relates to such bellows sleeves as are employed for sealing jointed cross shaft-axles especially such semi-axles relative to the respective axle gear. These sleeves are made of elastic material such as rubber and are divided longitudinally at least along a portion of the sleeve body. Along the dividing slot there extend flanges radially outwardly which are provided with surfaces facing each other and including sealing tongues and grooves which are pressed against each other by means of screws.

Many suggestions have been made heretofore for the improvement of such bellows sleeves. Mainly these suggestions have been concerned with the improvement of the materials of which the bellows sleeves are made because the requirements with regard to the oil resistance, a sufficient elasticity, and a long life have called for special attention. However, the closure of the divided sleeve also requires substantial attention because the closure as such constitutes a weak spot. This is so because the flanges which are clamped to each other by means of screws are subject to a certain mechanical working or squeezing, although the sleeves are positioned in such a manner that the flanges are located in a neutral motion zone. Accordingly, inspite of said tongues and grooves, the sealing has not always been completely satisfactory.

Sealing failures also occurred as a result of the natural aging of the respective material. A reduced elasticity in turn results in a reduction of the effectiveness or intensity with which the clamping screws hold the flanges together whereby the sealing effect is also reduced.

In order to overcome these difficulties, it has been suggested heretofore to provide the flanges with wide grooves and respect-ively wide or broad bulges. However, it has been found that by these means it was not possible to achieve substantial improvements because the cooperating areas are relatively large and the specific pressure which is rather significant for achieving a good sealing effect is accordingly reduced.

OBJECTS OF THE INVENTION

In view of the foregoing, it is the aim of the invention to achieve the following objects singly or in combination:

to overcome the outlined drawbacks of the prior art, more specifically, to achieve a good sealing of bellows sleeves even over prolonged periods of use;

to provide a special sealing effect in the area of the flanges, especially along the dividing line and this even after prolonged use;

the improved sealing is to be achieved while simultaneously avoiding increasing the wall thickness of the flanges along the dividing line;

to provide improved sealing characteristics while, at the same time, requiring less material than heretofore for making the sleeves; and

to construct and shape the entire bellows sleeve in such a manner that it may be easily manufactured so that the final product will be relatively inexpensive.

SUMMARY OF THE INVENTION

The above objects have been achieved according to the invention by providing the tongue as well as the groove with a cross-sectional shape having a wedge configuration, preferably a rather pointed wedge configuration and by further providing material accumulations in the range of the clamping screws which accumulations fit into respective recesses arranged opposite of said accumulations.

The pointed wedge configuration of the tongue and groove has the advantage that they take up very little space so that the size of the flanges does not need to be increased. To the contrary, the rather narrow tongues and grooves permit the use of shorter flanges, that is the flange dimension in the radial direction may be reduced so that less material is required for making the present sleeves.

Another, even more important advantage of the tongue and groove configuration as taught by the invention is seen in that, the pointed shape results in high specific sealing pressure which assures a safe sealing. The weak spots which were present heretofore especially around the clamping screws have been removed according to the invention by said material accumulations and respective recesses arranged around said clamping screw. Thus, the invention is seen in the combination of the pointed wegde shaped tongues and grooves with the material accumulations and recesses.

It has been found that the present bellows sleeves may be easily produced inspite of the improved sealing efficiency because the cooperating sealing means have a relatively simple shape.

BRIEF FIGURE DESCRIPTION

In order that the invention may be clearly understood, it will now be described, by way of example, with reference to the accompanying drawings, wherein:

FIG. 1 illustrates a longitudinal sectional view through a bellows sleeve according to the invention;

FIG. 2 is a sectional view along the line II—II in FIG. 1;

FIG. 3 is a view along line III—III in FIG. 2 and showing the section through the wedge shaped tongue and groove; and

FIG. 4 is a view similar to that of FIG. 2 but illustrating a differently shaped material accumulation and respective recess in the area of a clamping screw.

DETAILED DESCRIPTION OF EXAMPLE EMBODIMENTS

Referring to FIG. 1, the bellows sleeve 1 is provided with two connection cuffs 2 and 3 which may be connected to housing members or the like(not shown) by means of clamping straps. The sleeve 1 forms several folds 4. The sleeve is slotted longitudinally along a plane extending through the axis 5 of the sleeve and through the plane defined by the drawing sheet. As is best seen in FIGS. 2, 3, and 4, adjacent to the slot the sleeve is provided with flanges 6 and 7 extending radially away from the sleeve proper. The flanges 6 and 7 are clamped to each other by a plurality of clamping screws 8, one of which is shown in FIG. 1.

The flanges 6 and 7 have inner surfaces 9 and 10 facing each other. In order to provide a sufficient sealing

between these surfaces 9 and 10, the surface 9 is provided with a tongue 11 having a wedge shaped cross-sectional configuration, especially a pointed wedge shaped configuration whereas the opposite surface 10 is provided with a wedge shaped groove 12 in register with the tongue 11 so that the latter snuggly fits into the groove. The size of the tongue 11 and of the respective groove 12 is such that a high specific area pressure is accomplished along the flanges between the tongue and groove.

If desired, several tongues 11 and several grooves 12 may be arranged in parallel to each other as is indicated by phantom lines in FIG. 3. Such a double or even triple tongue and groove arrangement substantially increases the sealing characteristics of the sleeve because the plurality of tongues gripping into a like plurality of grooves forms a kind of labyrinth packing or seal. It has been found that the proper sealing characteristics are maintained even if the sleeve is subjected to torsional forces.

Each of the clamping screws 8 extends through a respective material accumulation 13 and a respective recess 14 arranged in the surfaces 9 and 10 at those points where the clamping screws extend through the two flanges. The recesses and respective material accumulations are arranged in such positions that the tongues and grooves and the material accumulations as well as the respective recesses form a continuous sealing line. This feature enhances the sealing characteristics substantially in combination with the above mentioned labyrinth seal.

The material accumulations 13 and the recesses 14 are dimensioned in such a manner that a light press fit is provided between the material accumulation and recess. The clamping screws 8 extend through bores 15 in the material accumulation and the portion of the flange wall in register with the recess whereby the diameter of the bore is slightly smaller than the outer diameter of the screw to provide a further press fit between the flange material around the material accumulation and the respective screw. Furthermore, it has been found that the material accumulations should have a height above the flange surface proper which is higher than the height of the tongue 11.

It is preferable that the tongues 11 and material accumulations 13 are arranged on one surface, for example, surface 9 and that the grooves 12 and recesses 14 are arranged on the opposite surface 10. This facilitates the production of the sleeve and flanges in a integral one piece fashion. The material accumulation 13 may have, for example, a cylindrical shape as seen in FIGS. 1 and 2. As a modification, the material accumulations may have a rectangular shape or a trapezoidal shape as also shown in FIG. 1. The improved sealing characteristics are achieved by the above mentioned combination of the lip seal between the tongue and groove which results in an increased specific or area pressure, with the improved sealing in the area of the claming screws due to the light press fit between the material accumulation and the respective recess and the press fit between the screw and its respective bore.

In addition of the above mentioned cylindrical, rectangular, and trapezoidal shape for the material accumulations and respective recesses, FIG. 1 also shows that a trapezoidal shape may be modified by curved bounding surfaces 18 and 19 whereby the material accumulation as well as the respective recess will have such curved bounding surfaces.

The selection of the shape of the material accumulations 13 and the respective recess 14 will mainly depend on the size of the sleeve and also on the flexibility required in any event in the area of the flanges 6 and 7. Thus, a cylindrical shape will be preferable where a compact flange configuration and a good elasticity are required. For large size, heavy sleeves as, for example, may be used in connection with trucks where a lower elasticity is feasable the rectangular or trapezoidal shapes and especially the trapezoidal shape with curved surfaces 18 and 19 may be employed. In the latter instance, the curved surfaces may form portions of cylinder surfaces whereby for example the cylinder surface 19 faces inwardly relative to the sleeve, whereas the cylinder surface 18 faces outwardly. It has been found, that this configuration assures a good fit and permits an easy as well as harmless possibility for rotation or twisting even where the sleeve is subjected to a sharp buckling action.

Preferably, the bounding walls of the accumulations 13 and the respective recesses 14 should extend perpendicularly relative to the surfaces 9 and 10 of the flanges 6 and 7. However, it is also possible to provide a press or snap fastener action by providing the accumulation 13 as well as the recess 14 as shown in FIG. 4 with back-tapers 16 and 17. This feature provides an especially good anchoring whereby, at least for short time periods, the seal may be maintained even without a clamping screw.

Referring further to FIG. 4, it will be noted that the flange 6 may have a wall thickness smaller than the flange 7. This is possible because the tongue 11 and the accumulation 13 compensate for the thinner wall thickness and the good sealing characteristics are thereby maintained. In this connection it is surprising that the wedge shaped tongue and grooves improve the elasticity of the entire sleeve. Other groove and tongue forms employed heretofore caused a stiffening of the entire flange structure.

The above mentioned feature of making the height of the material accumulations 13 higher than the height of the tongues 11 provides so called creeping paths of increased length which is especially advantageous where the sleeves are employed in connection with jointed cross shaft semi-axles of motor vehicles. Surprisingly, these creeping paths facilitate a continuous pressing and squeezing action.

The arrangement of all the tongues 11 and all the material accumulations 13 on one and the same surface and the arrangement of all the grooves 12 and recesses 14 in the other flange surface has the advantage that the tools for producing the present sleeve are simplified.

A further advantage is seen in that the tongue and groove arrangement results in substantial savings of material especially if taken in combination with the thinner flange walls now made possible by the invention and as shown in FIG. 4.

The above mentioned back-taper 16 and 17 also shown in FIG. 4 has the advantage of providing a snap fastener action, so that even where a clamping screw should break, the sudden and dangerous loss of lubri-

cant is avoided because this snap fastener action will maintain the seal at least until repair is possible.

Although the invention has been described with reference to specific embodiments, it is to be understood, that it is intended to cover all modifications and equivalents within the scope of the appended claims.

What is claim is:

1. In a bellows sleeve having a body made of elastic material, a longitudinal slot in said body extending at least partially along said sleeve, first and second flange means extending longitudinally along said slot and radially away from said sleeve body, said flange means having surfaces facing each other, sealing tongue and groove means forming part of said surfaces and arranged for cooperation with each other, as well as means for clamping said flanges together at spaced points along the flanges, the improvement comprising a wedge cross-sectional shape for said sealing tongue means intermediate said clamping means, a corresponding wedge shape for said sealing groove means also intermediate said clamping means, material accumulations at said spaced points forming part of one of said flange surface, and corresponding recesses forming part of the other of said flange surfaces at said points for receiving said accumulations.

2. The bellows sleeve according to claim 1, comprising two wedge shaped tongues and two respective wedge shaped grooves in said flange surfaces for cooperation with each other.

3. The bellows sleeve according to claim 1, wherein said clamping means comprise screw means, a bore through each of said material accumulations and through the flange in register with the respective recesses, said bore receiving a respective one of said screw means with a press fit, said material accumulations and respective recess having a sealing improving shape such that each accumulation fits with a light press fit into the respective recess.

4. The bellows sleeve according to claim 3, wherein said material accumulation and the respective recess have a cylindrical sealing improving shape.

5. The bellows sleeve according the claim 3, wherein said material accumulation and the respective recess have a rectangular sealing improving shape.

6. The bellows sleeve according the claim 3, wherein said material accumulation and the respective recess has a trapezoidal sealing improving shape.

7. The bellows sleeve according to claim 6, wherein at least two opposite surfaces of said trapezoidal shape are curved.

8. The bellows sleeve according to claim 3, where said material accumulation has a height above the respective flange surface which is higher than the tongue.

9. The bellows sleeve according to claim 1, wherein said tongue and material accumulations form part of the surface of one of the flanges, and wherein the groove and the recesses are formed in the surface of the other of said flanges.

10. The bellows sleeve according to claim 9, wherein said flange which comprises said tongue and material accumulations has a wall thickness thinner than that of the flange which comprises said groove and recesses.

11. The bellows sleeve according to claim 1, wherein said material accumulations and said recesses comprise back-tapers whereby a snap-in action between the material accumulation and the respective recess is accomplished.

12. The bellows sleeve according to claim 1, wherein said tongue and groove as well as said material accumulations and recesses are arranged along a continuous line.

* * * * *

United States Patent [19]

Kaminski

[11] **3,807,110**

[45] **Apr. 30, 1974**

[54] **MULTIPURPOSE ROOF PENETRATING CURB**

[75] Inventor: **Cyril John Kaminski**, Broadview, Ill.

[73] Assignee: **Pate Manufacturing Co.**, Broadview, Ill.

[22] Filed: Nov. 8, 1972

[21] Appl. No.: 304,851

[52] U.S. Cl. 52/219, 285/4, 285/44

[51] Int. Cl. E04d 13/14, E04g 15/06

[58] Field of Search .... 52/58, 219; 285/3, 4, 42–44, 285/137 R, 236

[56] **References Cited**

UNITED STATES PATENTS

686,323	11/1901	McGuire	285/44
1,686,881	10/1928	Stephenson	285/137 R
1,693,410	11/1928	Stephenson	285/44
1,399,748	12/1921	Cheney	285/42
2,956,495	10/1960	Sublette	52/219
3,254,153	5/1966	Kohler	285/137 R
3,521,414	7/1970	Malissa	52/219
3,602,530	8/1971	Elwart	285/4
3,654,965	4/1972	Oramain	285/137

Primary Examiner—Henry C. Sutherland
Assistant Examiner—James L. Ridgill, Jr.
Attorney, Agent, or Firm—Alter Weiss Whitesel & Laff

[57] **ABSTRACT**

A multipurpose roof penetration curb comprises a rubber-like boot fitting over a plastic cap or cover over a curb surrounding an opening on the roof. The cap provides a plurality of potential openings any one of which may be cut open to provide a waterproof egress through the roof. The boot has a somewhat pyrimidal contour formed by a plurality of interconnected truncated cylinders. The boot may be cut away so that the cylinder having an inner diameter which matches the outer diameter of the pipe is the topmost cylinder. Strap clamps are used around the boot at the pipe and at the cap to provide a waterproof and weatherproof seal.

9 Claims, 3 Drawing Figures

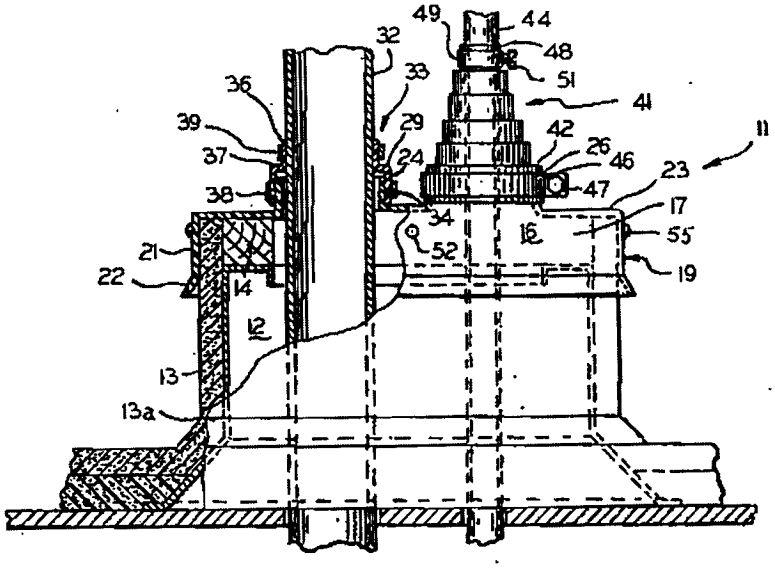

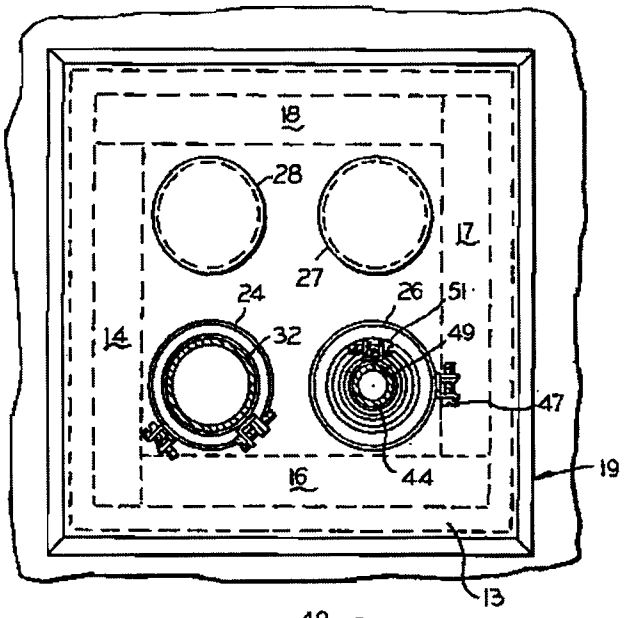

FIG.2

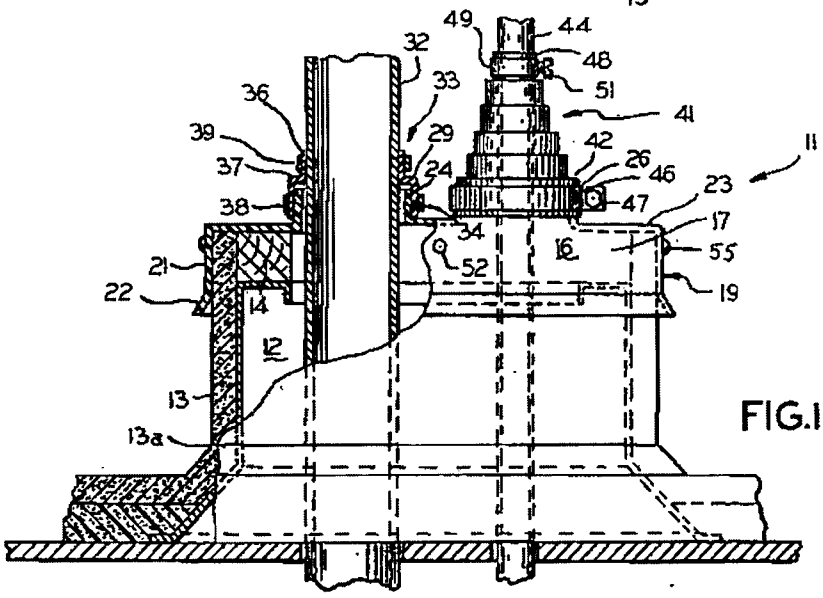

FIG.1

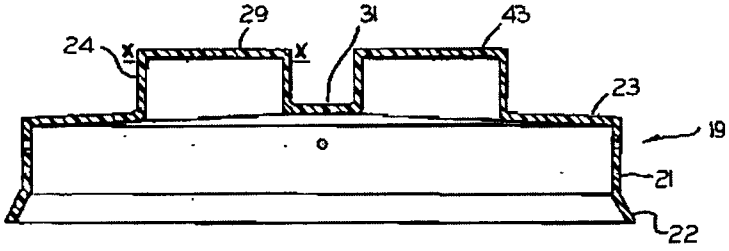

FIG.3

MULTIPURPOSE ROOF PENETRATING CURB

This invention relates to roof construction and, more particularly, to multipurpose roof penetration curb construction used to provide a weatherproof seal through a roof.

Many different types of pipes or other objects having generally circular cross-section pass through the outer covering or top of a roof on buildings. For example, antenna masts, plumbing and vent pipes or the like may pass through the roof of a building. These pipes may provide for roof-mounted air conditioners, electrical connections, water pipes, exhaust stacks, and the like.

It has always been a problem to provide a waterproof seal at points of egress through a roof, as at the juncture between the pipe and the roof. According to present day construction methods, this waterproof seal is essentially made by opening a hole in the roof, setting a curb over the hole, passing a smaller diameter pipe through the curb, filling the peripheral clearance between the pipe and curb, and then covering the curb and adjacent roof with any suitable pitch. This conventional method of construction not only is time consuming, but also is not the best way to provide a waterproof seal. Many problems arise due to leakage through the pitch, especially as it ages, shrinks, and cracks. The temperatures vary between baking in the hot summer sun and freezing during the cold winter night. Also, the seal must endure cold, wind, storm, snow, ice, and the like. Of course, there is a constant degradation due to the continual assaults by rain and ice.

One reason why this conventional method is used is that the pipes which pass through the roof have many different diameters. Thus, it has been most difficult to accommodate them with any prefabricated seal.

Accordingly, an object of this invention is to provide a new and improved roof penetration curb.

A related object of this invention is to provide a roof penetration curb assembly which can accommodate many different types and diameters of pipes.

Yet another object of this invention is to provide a multipurpose roof penetration curb having plastic caps or covers thereover and plastic boots used in conjunction with the caps or covers to enable egress from and provide a seal around the pipes that pass through the roof. Here an object is to avoid the necessity of using a pitch pocket.

Yet another object of this invention is to provide a boot which enables waterproofing and weatherproofing of pipes at the egress points through roofs.

Still another object of the invention is to provide such a cap made from ABS Plastic material that is especially well suited to protect it from the weather.

In keeping with an aspect of the invention, these and other objects and features are accomplished by providing a plastic cap or cover for a curb on a building roof. The plastic cap or cover is shaped with at least one upraised cylindrical section having an outside diameter for receiving the lowermost cylinder of the somewhat pyramidal boot. The boot is fabricated from a flexible, gasket-type of material. It comprises a plurality of integrally-formed truncated cylinders. The uppermost cylinder has the smallest diameter and the lowermost cylinder has the largest diameter, the inside diameter of which is the same as the outside diameter of the upraised cylindrical section of the cap or cover. Pipe clamps are used to seal both the smaller and the larger diameter boot cylinders.

A preferred embodiment of the invention may best be understood from a study of the following specification when taken in conjunction with the attached drawings wherein:

FIG. 1 is a side elevation view of the multipurpose roof penetration curb assembly in partial cross-section;

FIG. 2 is a plan view of the multipurpose roof penetration cap and curb assembly of FIG. 1; and

FIG. 3 is a side cross-sectional view of a multipurpose roof penetration curb cap or cover without the boot and prior to cutting.

FIG. 1 shows at 11 the inventive roof penetration curb assembly. The curb assembly 11 comprises a curb 12 which may be a sheet metal box-like structure, such as those that are commonly used in current roof construction. One type of curb taught in the recently filed U.S. Pat. Application Ser. No. 246,565, filed Apr. 24, 1972, and assigned to the Assignee of this invention may be used in the subject invention.

The curb 12 is surrounded by roofing felt shown in partial sectional form at 13. The roofing felt raises from the roof line and also surrounds the entire curb 12 and is nailed at the top of the curb to nailers or wooden beams 14, 16, 17 and 18. The curb 12 itself might be made from metal, plastic, wood or other suitable materials.

The curb assembly is topped with a curb cap or cover 19. The curb cover has a vertical apron 21 ending in a flared portion 19 which forms a drip edge. In a preferred embodiment of the cover the flare is 30° from the vertical. The vertical apron 21 goes into the top portion 23 which is integral to and forms the top portion of the curb cap or cover 19.

As is best seen in FIGS. 2 and 3, there are four upraised cylindrical sections on the curb cap or cover, such as upraised sections 24, 26, 27 and 28. The four upraised cylindrical sections are shown as being somewhat cap-shaped. These sections and the cap or cover 19 are one integral curb cover unit. The top 29 of any one or each upraised portion 24, 26, 27, 28 of the cover 19 is cut away as at line x—x to enable a pipe to pass therethrough. If no pipe is to pass therethrough, of course, the cover is left intact.

As can best be seen in FIG. 3, a drainage crown 31 is provided on the top of the curb cap or cover 19 to expedite the drainage of water, snow or the like from the top of the cover. The drainage crown is provided by molding the cap or crown with a raised center having a gentle slope toward all sides. The highest raised portion of the crown is at 31 and the slope is easily seen in FIG. 3.

While the cap or crown may be made from any suitable material, it is preferably made from ABS thermoplastics. These plastics are derived from acrylonitrile, butadiene, and styrene. They are hard, rigid, and tough, and are in the medium cost range. Usually the resins are opaque, and dark to light ivory in color. They can be pigmented to match almost any color, and produce finished parts of high luster.

Preferred properties of ABS plastics for use in this invention are set forth in the following table:

TABLE I.—Typical Properties of ABS Resins

	Grade				
	General purpose	Medium heat resistant	Maximum heat resistant	High impact	Self-extinguishing
Impact strength, notched ¼ in., Izod specimen (ft. lb./in.):					
At 73 F	6.5	5.5	2.2	7.5	4.0
At −20 F	2.4	1.6	1.1	3.5	1.1
At −40 F	1.9	1.3	0.7	2.6	0.8
Tensile strength:					
At 73 F (p.s.i.)	5,900	6,500	7,400	4,900	5,300
Tensile modulus:					
At 73 F (1,000 p.s.i.)	300	340	390	240	290
Hardness, Rockwell R	103	105	111	89	92
Deflection temperature, unannealed (F):					
At 264 p.s.i.	186	201	224	187	184
At 66 p.s.i.	203	218	238	208	201
Coefficient of thermal expansion:					
(per °F × 10^{-5})	5.3	4.7	3.6	6.1	—

Blending grades may also be used for compounding with other resins to achieve special properties which are attractive when used to make the cap or cover 19. For example, ABS is alloyed with polycarbonate to achieve higher flexural modulus than either resin alone plus the deflection temperature improvement contributed by the polycarbonate and the molding ease contributed by the ABS. Other ABS resins are used to modify rigid PVC. Although ABS resins are not highly flammable, self-extinguishing grades are sometimes preferred, in which case they are coated with a flame-resistant material. Also, it is well to provide protection from ultraviolet degredation in the form of an acrylic coating. When used in regions of extreme temperature change, it is well to improve reflection temperature by annealing the parts.

ABS thermoplastics are used according to this invention because of their impact resistance, surface hardness, rigidity, and heat resistance, as well as their chemical resistance. The chemical resistance is especially important since it enables the cap or cover to stand up under the attack of high pollution impurities found in many cities. The ABS thermoplastics also lend themselves well to vacuum forming, and large extruded shapes can be fabricated. Generally, all grades of ABS thermoplastics are considered impermeable to water and thus are useful for the purpose taught herein. The low moisture absorption and resistance to cold flow contribute to the dimensional stability of the ABS thermoplastics which, of course, is extremely useful in the waterproofing and weatherproofing purposes acting as a roof curb cover to enable the egress of pipes.

FIGS. 1 and 2 show two pipes passing through the cap or cover 19 and on through the roof of the building. The first pipe 32 passes through the raised cylindrical portion 24 of the cover. First, the top 29 of the raised portion 24 is cut along line *x—x* on site. Then the pipe is slipped through the cover.

Next, a boot such as boot 33 is cut at one of the sections to provide a good fit between the outside diameters of the pipe and the inside of the boot. The boot is attached to the pipe and cylinder 24 to give the necessary waterproofing and to protect against the varying

ambient weather conditions. Thus, in extremely hot weather, for example, the pipe will tend to expand; in cold weather it will tend to contract; and a waterproof cover follows the variations in the diameter of the pipe. The clamp squeezes the boot sufficiently to prevent seepage or leakage of water through the space between the pipe and the curb cap or cover.

Initially, the boot 33 is a somewhat pyramidal unit having a stepped configuration to conform to almost any standard pipe reasonably expected to be used in conjunction with the barrier system. The boot is then cut to the appropriate diameter for any given pipe. In the case of pipe 32, the cut boot has two steps with a first or larger diameter truncated cylindrical section 34 matching upstanding cylinder 24 and a second or smaller diameter cylindrical section 36. These two steps are integrally joined together. Here, strap type pipe clamps 38, 39 are used to complete the waterproof connections. However, any other well-known type fastener may also be used in place of the strap clamp arrangements.

In a similar manner, boot 41 is cut at a much higher point so that it fits a smaller pipe 44. The topmost cylindrical section 48 of the boot 41 is fixed to the pipe 44 by a strap clamp 49 and tightened with fastener 51. In like manner, the boot may be cut at any other similar cylindrical section in order to accommodate virtually any diameter pipe. Boot 41 may be made from any good, flexible, weather-resistant rubber-like material, preferably, neopreme rubber.

For attaching the cap or cover to the curb, a plurality of screws pass through holes in the cover 19 and into the nailer, as shown at 55. In practice then, the curb assembly surrounds an opening in the roof and attaches to adjacent structure. Roofing felt covers the curb and provides weatherproofing at the roof line. The opening in the top of the curb first covered with a curb cap or cover, preferably made from an ABS plastic having an acrylic coating. The cover has a numer of upraised cylindrical portions, any of which is cut to enable passage of pipes therethrough.

A boot having multiple cylinders, integral to one another, is built somewhat as a truncated pyramid, and is cut to have a desired upper inside diameter. The portions of the pyramidal boot that are smaller in diameter than the pipe are discarded. The pipe is fitted through the topmost cylinder, where the boot has been cut. Strap clamps attach the boot to the upraised portion of the curb cover and to the pipe. This roof sealing system provides an extremely efficient, long lasting water and weather proofed egress for pipes through roofs. The curbs, covers, and boots are fabricated away from the construction site but are fitted and assembled on the construction site. No additional flashing, pitch, or the like, is required. Thus, the device is less expensive and may be installed faster. It provides longer usage with less leakage or seepage during the years of actual use.

While the principals of the invention have been described above in connection with the specific apparatus and applications thereof, it is to be understood that this description is made only by way of example and not as a limitation on the scope of the invention. Thus, the appended claims are to be construed to cover all equivalent structure.

I claim:

1. A multi-purpose roof penetration curb assembly for providing waterproof and weatherproof egress for pipes passing through roofs,

said assembly comprising curb means attached to a roof and surrounding an opening in the roof,

said curb having an open top,

plastic cover means shaped to fit over, be attached to and enclose the open top of said curb means,

said curb means having upstanding walls supported by and rising above said roof,

nailer means located atop said upstanding walls and surrounding the open top of said curb means,

roofing felt attached to said nailer means and covering said upstanding walls of said curb,

said cover means having substantially horizontal top side and a downwardly depending vertical apron integrally attached to said substantially horizontal surface,

said cover means being attached to said curb by fasteners going through said cover means and into said nailer,

said cover means having at least one upstanding vertical section integral therewith,

means for passing a pipe through said upstanding vertical section, and

boot means for making a waterproof seal between said pipe and said cover without requiring caulking,

said boot means having a first vertical section contiguous to the outer periphery of said pipe and a second vertical section contiguous to said upstanding cylindrical section.

2. The curb of claim 1 wherein said cover is an integral five-side box-like structure having a plurality of said cylindrical sections formed on one of said sides having a drainage dome and forming a top of said box-like structure,

each of said cylindrical sections comprising a circumfrential skirt with a closed top,

the other four of said sides of said box being a skirt depending from said top and forming a support at the perimeter thereof,

the free edge of each of said four sides flairing outwardly away from said curb to form a drip edge,

any of said cylindrical sections having said closed top cut therefrom providing a port for giving egress to said pipe, and

means for sealing said boot means around said pipe and around the circumferential skirt remaining after the top is cut from said cylindrical section.

3. The curb assembly of claim 1 wherein said boot means comprises a rubber-like member having a generally stepped pyramidal shape wherein each of the steps is generally cylindrical and integrally joined to adjacent members.

4. The curb of claim 3 wherein said boot is cut in the circumferential plane of at least one of said cylindrical members to fit the inside diameter of said boot to the outside diameter of said pipe.

5. The curb of claim 4 and strap clamp means surrounding said boot at the top and bottom thereof in order to attach said boot to said pipe and said upstanding cup means.

6. The curb assembly of claim 2 wherein said cover comprises a plurality of said upstanding cylindrical sections and the inside diameter of the largest cylindrical member of said boot means snugly fits over the outside diameter of said cylindrical sections.

7. The curb of claim 6 wherein said cover is an integrally formed member made of ABS plastic.

8. The curb of claim 7 wherein said cover is a five side box-like structure having said cylindrical sections formed on one of said sides at the top of said box-like structure, the other four of said sides depending from said top and forming a support at the perimeter thereof, the free edge of each of said four sides flaring outwardly to form a drip edge.

9. The curb of claim 8 wherein said upstanding cylindrical sections are formed on said top and said top is generally domed to provide drainage.

* * * * *

United States Patent [19]

Logsdon

[11] **4,010,578**

[45] **Mar. 8, 1977**

[54] **ROOF FLASHING STRUCTURE**

[76] Inventor: **Duane D. Logsdon**, 1708 Calavera Place, Fullerton, Calif. 92631

[22] Filed: **Nov. 11, 1974**

[21] Appl. No.: **522,788**

[52] U.S. Cl. **52/58**; 52/199; 285/44

[51] Int. Cl.² **E04D 1/36**

[58] Field of Search 52/58, 199; 285/42, 285/43, 44

[56] **References Cited**

UNITED STATES PATENTS

3,098,663	7/1963	Dibley	285/43
3,313,559	4/1967	Kifer	285/43
3,731,952	5/1973	Elwart	285/44 X
3,797,181	3/1974	Nievelt	52/199 X

OTHER PUBLICATIONS

The Condensed Chemical Dictionary, 8th Edition, Gessner G. Hawley, 1971, pp. 2, 14, 528.

Primary Examiner—Ernest R. Purser
Assistant Examiner—Carl D. Friedman

[57] **ABSTRACT**

A roof flashing structure for use in forming a seal around a pipe on either flat roofs or roofs pitched at various common angles can be constructed utilizing a generally flat, imperforate plate having a centrally located opening. Such a plate carries an upstanding, imperforate housing extending outwardly from one side of the plate, this housing terminating in an open end located remote from the plate of larger dimension than the pipe. An annular retainer is carried by this end of the housing; a resilient elastomeric sealing member is carried by the retainer. This sealing member engages the exterior of the pipe in such a manner as to form a seal against the pipe, and in such a manner as to permit the plate to be adjusted relative to the pipe so as to fit against either a flat roof or a roof at any commonly used pitch. The plate, the housing and the retainer are preferably formed integrally with one another out of a sheet of ABS material laminated to a surface covering of a degradation resistant acrylic composition.

2 Claims, 3 Drawing Figures

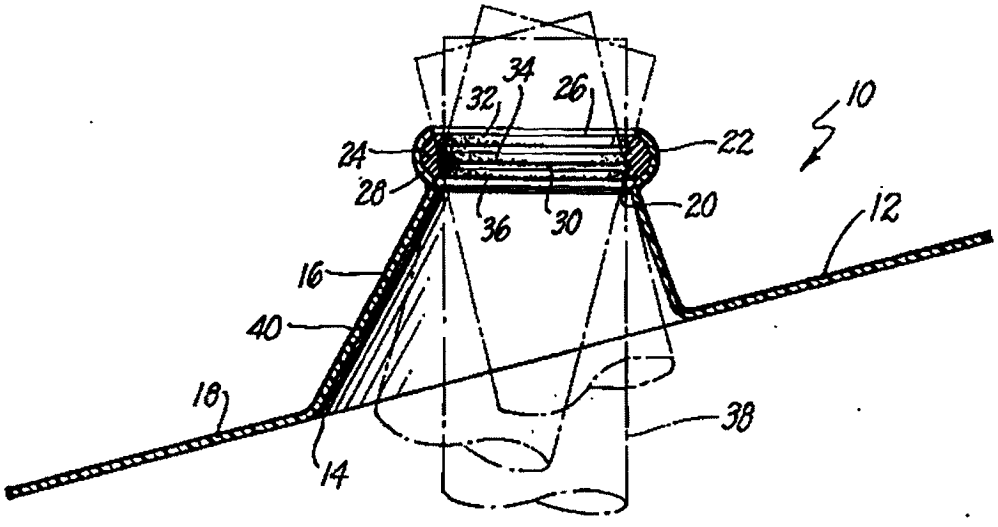

FIG. 1.

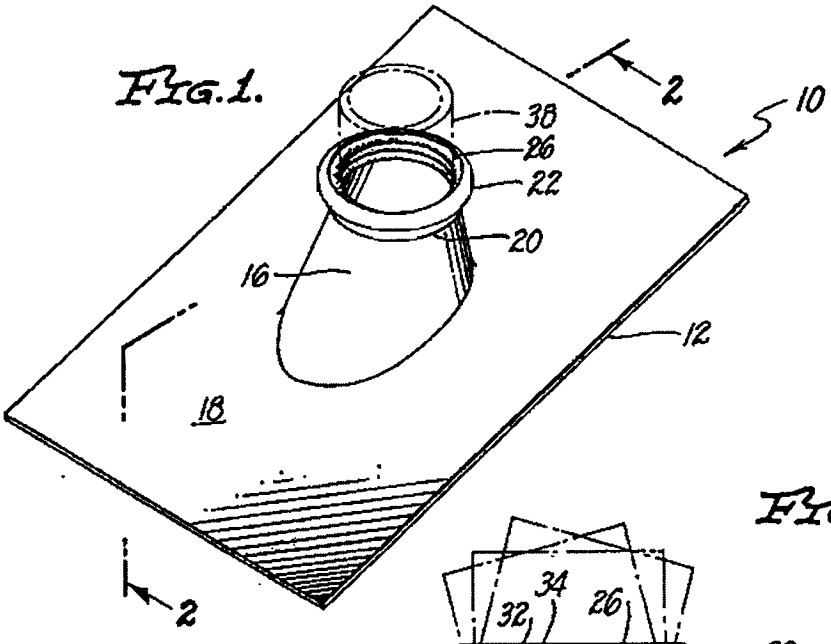

FIG. 2.

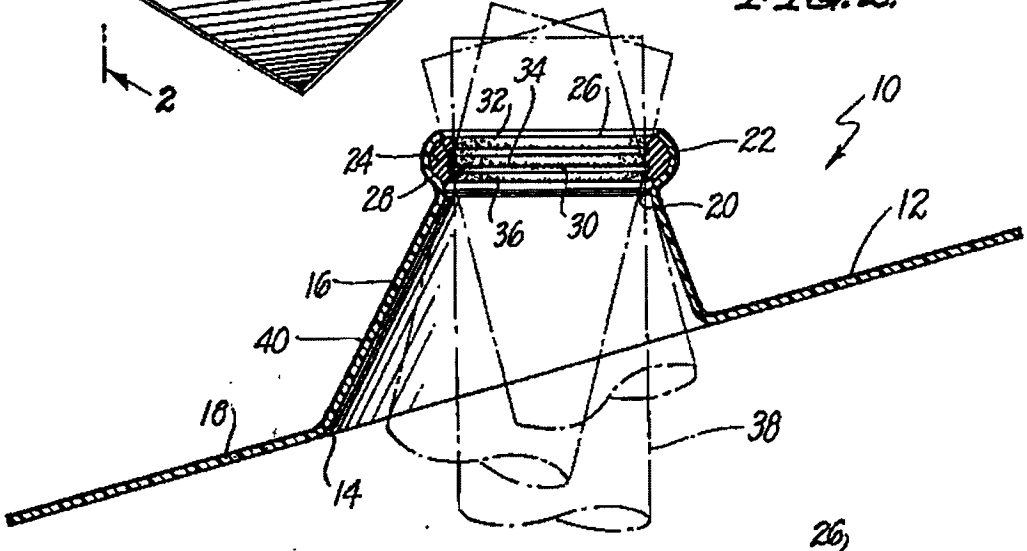

FIG. 3.

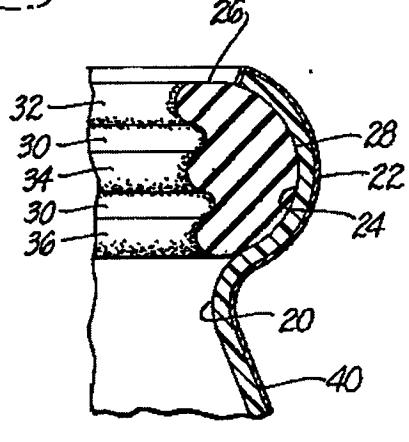

ROOF FLASHING STRUCTURE

BACKGROUND OF THE INVENTION

The invention set forth in this specification pertains to new and improved roof flashing structures for use on a roof so as to form a seal around a pipe extending through the roof.

The term "flashing" is commonly utilized in the building trade to designate pieces of sheet metal or the like used to cover and protect various types of joints. Various different specific flashing structures are commonly utilized in covering and protecting different types of joints. Thus, for example, it has been commonplace to utilize flashing structures for covering and protecting joints between a roof and a vent pipe or the like which have been constructed so as to utilize a flat plate or sheet of material carrying an upstanding flange adapted to fit around the exterior of such a pipe. Normally the flange in such a structure is sealed to such a pipe by a calking type composition. At times such sealing compositions are referred to as mastics.

Specialized roof flashing structures as indicated in the preceding paragraph are commonly recognized to have certain limitations. Normally such structures can only be utilized with a roof located at a specific angle to a pipe extending through the roof. This is disadvantageous because it necessitates the maintenance of an inventory of different flashing structures for use with different roofs which are flat or are sloped at various different angles. Roof flashing structures as indicated are also considered disadvantageous because of the use of the compositions which are employed to form a seal between them and a pipe. In general such compositions tend to be somewhat messy, difficult and time consuming to apply. Further, such compositions will frequently tend to crack and/or deteriorate after prolonged use. This, of course, will result in either leakage or the possibility of leakage.

SUMMARY OF THE INVENTION

It is believed that it will be apparent from the preceding that there is a need for improvement in the field of roof flashing structures and more specifically in connection with roof flashing structures which are utilized around pipes such as vent pipes. A broad objective of the present invention is to fulfill this need. The invention is also intended to provide roof flashing structures as indicated which can be constructed at a comparatively nominal cost, which can be easily and conveniently installed and which are capable of giving prolonged, reliable service. While all of these items are important it is considered that the cost of installing roof flashing structures of the present invention makes them particularly desirable as compared to prior structures.

In accordance with this invention these various objectives are achieved by providing a roof flashing structure for use on a roof so as to form a seal around a pipe extending through the roof which comprises: a generally flat, imperforate plate adapted to overlie and fit against a roof, this plate having a centrally located opening of larger dimension than the pipe formed therein, an upstanding, imperforate housing located on one side of the plate so as to extend outwardly from this side of the plate, this housing extending around the opening and having an open end of larger dimension than the pipe located remote from the plate, an annular retainer means for holding a sealing member located on this end of the housing, this retainer means being capable of fitting around the exterior of the pipe, and a resilient, elastomeric sealing member held by the retaining means and extending from the retainer means towards the interior of the retainer means, this sealing member being capable of resiliently engaging the exterior of the pipe when the pipe extends through the opening, the housing and the retainer means so as to form a seal against the exterior of the pipe.

BRIEF DESCRIPTION OF THE DRAWING

The invention is best more fully described with reference to the accompanying drawing in which:

FIG. 1 is an isometric view of a presently preferred embodiment of a roof flashing structure in accordance with the invention in which a vent pipe is shown in phantom;

FIG. 2 is a cross-sectional view taken at line 2—2 of FIG. 1 in which the vent pipe illustrated in phantom in FIG. 1 is illustrated as extending vertically and in which alternate manners in which the vent pipe can extend are indicated in phantom at an angle to the vertical; and

FIG. 3 is an enlarged, fragmentary cross-sectional view corresponding to a part of FIG. 2.

The roof flashing structure illustrated in the drawing embodies the concepts of this invention set forth and defined in the appended claims. These concepts may be easily utilized in other somewhat differently appearing roof flashing structures through the use or exercise of routine engineering skill.

DETAILED DESCRIPTION

The roof flashing structure 10 illustrated in the accompanying drawing includes a generally flat plate 12 which is adapted to overlie and fit flat against a roof (not shown). This plate 12 has a centrally located opening 14. An upstanding housing 16 is attached to the plate 12 around the periphery of the opening 16 so as to extend upwardly from an upper surface or side 18 of the plate 12. This housing 16 is of a generally tapered shape and has its largest dimension adjacent to the plate 12; it terminates in an open end 20 which is located remote from the plate 12. This end 20 is attached to and carries a retainer ring 22 located so as to be positioned on the end 20 generally away from the plate 12.

The interior of this ring 22 is formed so as to include an inwardly directed groove 24 which extends completely around the interior of the ring 22. This groove 24 has a curved, circular cross-sectional shape as shown. The groove 24 is used to hold an annular or ring-like elastomeric, resilient sealing member 26 having an outer surface 28 which conforms to the interior shape of the groove 24. The interior 30 of the sealing member 26 is provided with a plurality of inwardly projecting sealing flanges 32, 34 and 36, each of which is of a partially circular cross-sectional configuration. These flanges 32, 34 and 36 successively decrease in internal dimension or diameter in such a manner that the flange 36 located closest adjacent to the plate 12 is the flange 36 located closest adjacent to the plate 12 is the largest of these flanges.

When the structure 10 is to be utilized it is assembled with the sealing member 26 in the retainer 22 as shown. The structure 10 can then be brought down upon a vent pipe 38 as is shown in phantom in FIG. 1. The successive changes in internal dimensions of the sealing

flanges 36, 34 and 32 facilitate the structure 10 being pulled to an operative position in this manner. These flanges 32, 34 and 36 are dimensioned so that all of these flanges will resiliently engage the vent pipe 38 as the structure 10 is assembled in this manner so as to each form a seal against the exterior of the pipe 38.

When the structure 10 is moved in this manner it will normally be moved along the pipe 38 until such time as the plate 12 hits against a roof. The structure 10 can then be twisted on the pipe 38 so that the pipe 38 extends through it in any of the manners shown in phantom in FIG. 2 so as to permit the plate 12 to be located against either a flat roof or a roof constructed at any common angle to the horizontal. Thus, the plate 12 can be located at a right angle to the pipe 38 or at a plurality of other angles relative to this pipe 38.

In order to achieve this mode of operation the opening 14, the end 20 and the retainer ring 22 must all be constructed so as to be larger than the vent pipe 38 with which the structure 10 is to be used. Further, the housing 16 must be tapered in the manner indicated so as to accommodate the pipe 38 being located relative to the structure 10 in any of the manners indicated. The shape of the groove 24 and of the sealing member 26 are both considered to facilitate seals being formed against the exterior of the pipe 38 in all positions of this pipe.

Although the structure 10 can be constructed from a number of different materials in a number of different ways it is presently preferred to construct the structure 10 so that all parts of its except the sealing member 26 are integral with one another and are imperforate. When the structure 10 is constructed in this manner and is used as described only a very limited amount of the sealing member 26 is exposed to ambient conditions such as might cause degradation of the material in the sealing member 26. This is considered important in enabling the structure 10 to be utilized over a prolonged period. If for any reason such degradation shall commence and shall affect the uppermost sealing flange 32 the other sealing flanges 34 and 36 will still remain operative for their intended purpose.

It is preferred to manufacture the entire structure 10 except for the sealing member 26 of a polymer material which will not rust or corrode in use. It is considered that preferred results can be achieved when such a body is formed of a common ABS polymer composition covered with a thin acrylic layer 40 which is laminated in place by thermal means. Such as ABS polymer body is, of course, though and rigid since ABS material itself is relatively tough and rigid. Such an acrylic layer 40 is much more resistant to normal ambient conditions than ABS material and, hence, enables the structure 10 to be satisfactorily employed over a prolonged period.

Unquestionably the latter is quite important as far as the utility of the present invention is concerned. It is, however, considered secondary to the ease of installing a structure 10 in an operative location. It is considered that considerable labor savings can be achieved in installing the structure 10. This structure 10 is of such a nature that it does not require the use of caulking or mastic type compositions. Hence, it avoids the steps of using such compositions in installing the roof flashing structure. This structure 10 also avoids cracking and other related problems frequently encountered with caulking or masking compositions.

The utility of the structure 10 can be improved by making the layer 40 at the upper surface 18 of a textured or irregular surface configuration. Such a roughened surface configuration is considered desirable because hot tar and other compositions such as are commonly employed in roofing will adhere to such a roughened surface more easily than to a smooth surface.

I claim:

1. A roof flashing structure for use on a roof so as to form a seal around a pipe extending through the roof which comprises:

a generally flat, imperforate plate adapted to overlie and fit against a roof, said plate having a centrally located opening of longer dimension than said pipe formed therein,

an upstanding, imperforate, tapered housing located on one side of said plate so as to extend outwardly from said side of said plate, said housing extending around said opening, said housing having an open end of larger dimension than said pipe located remote from said plate, said housing being of its largest dimension adjacent to said plate,

an annular retainer means for holding a sealing member located on said open end of said housing, said retainer means being capable of fitting around the exterior of said pipe, said retainer means comprising a ring, the interior of said ring having an inwardly facing groove formed therein, said groove having a curved, circular cross-sectional shape and extending completely around the interior of said ring, and

said plate, said housing and said retainer means being integral with one another and being formed of a rigid material,

a resilient, elastomeric sealing member held by said retainer means and extending from said retainer means towards the interior of said retainer means,

said sealing member having an outer surface conforming to the interior shape of said groove and including a plurality of separate sealing flanges extending therefrom toward the interior of said sealing member, each of said sealing flanges being capable of separately engaging said pipe,

said retainer means and said housing being of sufficient dimension so as to permit said plate to be positioned at a right angle to said pipe and at a plurality of other angles to said pipe,

said sealing member projecting inwardly from said retainer means a sufficient distance and being sufficiently flexible to form a seal with said pipe in all positions of said plate relative to said pipe.

2. A roof flashing structure as claimed in claim 1 wherein:

said flanges have successively decreasing internal diameter, the one of said flanges closest to said plate having the largest internal diameter of any of said flanges, the one of said flanges furthest from said plate having the smallest internal diameter of any of said flanges,

each of said flanges having a curved extremity extending toward the interior of said sealing member.

* * * * *

United States Patent [19]

Resech

[11] **4,211,423**

[45] **Jul. 8, 1980**

[54] **ROOF SEAL DEVICE**

[75] Inventor: **Raymond W. Resech, La Grange Park, Ill.**

[73] Assignee: **Portals Plus, Inc., La Grange Park, Ill.**

[21] Appl. No.: **974,435**

[22] Filed: **Dec. 29, 1978**

Related U.S. Application Data

[63] Continuation-in-part of Ser. No. 881,186, Feb. 27, 1978, abandoned.

[51] Int. Cl.[2] F16J 15/02; E04D 13/14

[52] U.S. Cl. ..... 277/212 FB; 285/4; 285/42; 277/1; 277/12

[58] Field of Search ..... 277/1, 12, 212 FB; 285/3, 4, 42–44

[56] **References Cited**

U.S. PATENT DOCUMENTS

917,167	4/1909	Shaw	285/43
2,985,465	5/1961	Church	285/42
3,704,894	12/1972	Didszuhn	277/212 FB
3,807,110	4/1974	Kaminski	285/44 X
4,010,578	3/1977	Logsdon	285/44 X

Primary Examiner—Robert S. Ward, Jr.

Attorney, Agent, or Firm—John C. Brezina; Van Metre Lund

[57] **ABSTRACT**

A device is provided including a pair of base sections adapted to be joined together along a generally vertical plane in approximate alignment with a pipe or other object extending through a roof or supported therein, such sections including a pair of molded plastic-supporting parts and a pair of skirt parts of elastomeric material which have overlapping edge portions and which define a downwardly facing surface secured by an adhesive to the upper surface of roofing material to provide a permanent weathertight seal. A split boot is secured to the upper end of a tubular portion of the base sections and is of a stepped, severable construction for accommodating pipes or other objects of various larger sizes. Lips at the split of the boot are secured together by a channel-shaped metal clip. For smaller objects, a split plug is secured on the upper end of the split boot and has inwardly facing annular serrations for sealing engagement with an object. A multi-purpose adaptor plug is also provided for use with a variety of shapes, sizes and orientations of objects.

16 Claims, 14 Drawing Figures

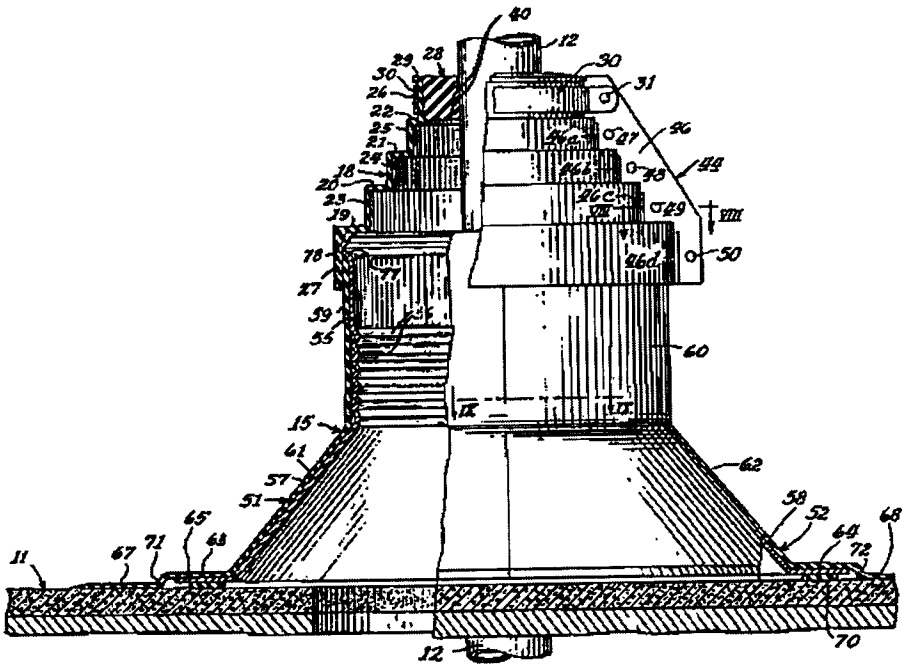

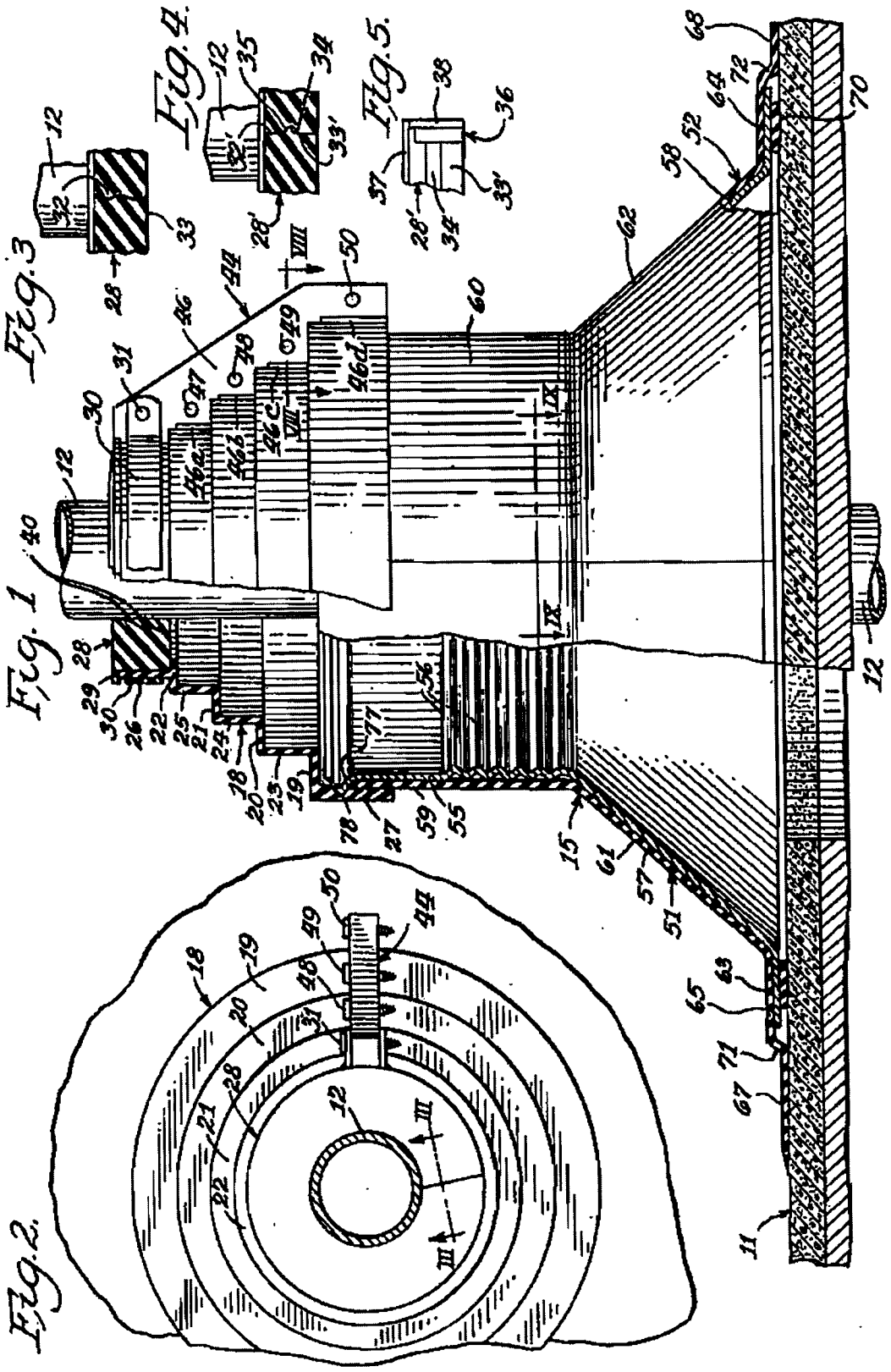
Fig. 1
Fig. 2
Fig. 3
Fig. 4
Fig. 5

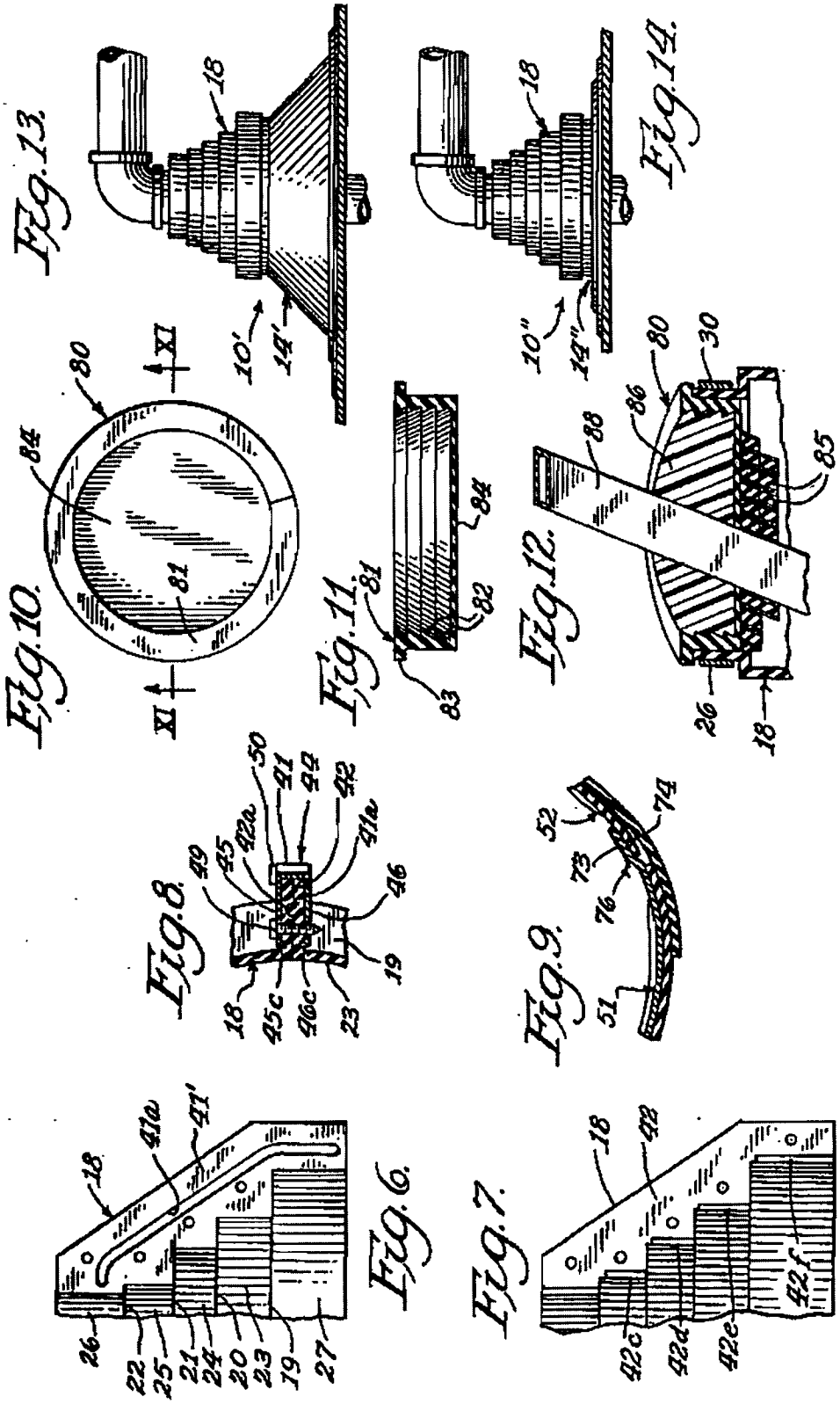
Fig. 13.
Fig. 14.
Fig. 10.
Fig. 11.
Fig. 12.
Fig. 8.
Fig. 9.
Fig. 6.
Fig. 7.

ROOF SEAL DEVICE

This application is a continuation-in-part of my copending application, Ser. No. 881,186, filed Feb. 27, 1978, now abandoned.

This invention relates to a roof seal device and more particularly to a device for providing a seal on a roof around a pipe or other object extending through a roof or supported therein. The device is adapted for use in extending pipes through existing roofs as well as in new constructions and is easily installed while providing a permanent weathertight seal.

BACKGROUND OF THE PRIOR ART

Under present roofing practices in which a pitch pocket is used to seal a pipe to a roof opening, leaks are quite common and there is a very high percentage of leaks within the first six months after installation. Sealants crack or run off because of ever-changing weather conditions. Pipe and roofing materials expand and contract with temperature changes and there are also relative movements such as vibrations from wind and/or machinery. If oftentimes happens that leaks are not discovered until after substantial damage has occurred, making major repairs necessary.

Roof curb devices have been provided for obtaining a proper seal but have generally be designed for new construction or during installation of a new roof and they are difficult to install and not at all suitable for extending a pipe through an existing roof.

SUMMARY OF THE INVENTION

This invention was evolved with the general object of overcoming the disadvantages of prior art sealing methods and devices and of providing a device which will provide a permanent weatherproof seal and which is readily installed in both existing and new construction.

In accordance with this invention, a pair of complementary base sections are provided, each including a support part of a molded, strong and substantially rigid plastic material and a skirt part of a flexible elastomeric material on the support part. The sections are arranged to be secured together along a generally vertical plane through a roof opening and together they provide an upstanding tubular portion and a peripheral flange portion with the skirt parts providing a downwardly facing surface engageable with the upper surface of roofing material about a pipe or other object extending through a roof or supported therein. An adhesive material bonds such engaging surfaces together and a permanent weatertight seal is provided.

The flexibility of the skirt parts promotes conformity to irregularities in the upper surface of the roofing material and also allows for relative expansions and contractions such as those due to temperature changes. Preferably and in accordance with a specific feature, the skirt parts are formed with offsets in a manner such as to provide an annular wall portion outside the periphery of the support parts, for additional flexibility.

Another specific feature relates to the provision of sections of adhesive material on the undersides of the edges of the support parts for holding the skirt parts on the roof during application of an adhesive between the peripheries of the skirt parts and the roof surface.

Seal means are secured to the upper end of the upstanding tubular portion defined by the base sections, preferably including a split boot of flexible elastomeric material which is most preferably of a stepped, severable construction for accommodating pipes or other cylindrical objects of various larger sizes. For objects of smaller sizes, a split annular plug is secured on the upper end of the boot, the plug having an opening of a size matched to that of the small object to be sealed and serrated tooth formations are provided in such opening.

Important features of the invention relate to the construction of the split boot and to the manner of installing the boot on the base sections. A pair of lip portions are provided at the split of the boot and are pressed together by a clip of generally channel-shaped configuration which is preferably formed with notches to conform to the stepped configuration of the boot and which is severable according to the size of the pipe.

In accordance with a specific feature, the clip is formed with tooth portions which bite into grooves in the lip portions in a manner and as to insure a highly reliable sealed connection.

Additional features relate to the construction of the plug which includes an outwardly extending annular flange or in an alternate construction, it includes a downwardly facing annular groove receiving an uppermost tubular portion of the stepped boot with tongue and groove means and overhanging flap means being provided at the split of the plug.

Another very important feature relates to a multipurpose adaptor plug which is so arranged as to receive a mastic and to provide a seal around an object or a plurality of objects of a variety of configurations. It may be used for example, for a plurality of pipes, one or more angle irons or for square tubes, objects extending at angles, etc.

Still another feature relates to the provision of annular ribs on the inside of the tubular portion of the base for engagement with the outside of a sheet metal chimney which may be nailed to a roof in new constructions. The device is thus suitable for installation during new construction as well as on existing roofs and can accommodate pipes of a wide range of sizes. It should be understood that the device can be used in conjunction with any elongated object similar to a pipe and the term "pipe" is used herein in a generic sense to include any equivalent type of object.

This invention contemplates other objects, features and advantages which will become more fully apparent from the following detailed description taken in conjunction with the accompanying drawings.

BRIEF DESCRIPTION OF THE DRAWINGS

FIG. 1 is a side elevational view, partly in section, illustrating a device constructed according to the invention installed on a roof to provide a seal to a pipe;

FIG. 2 is a top plan view of the device;

FIG. 3 is a sectional view taken substantially along line III—III of FIG. 2 and showing an interface at the split of a plug of the device;

FIG. 4 is a view similar to FIG. 3, showing an alternative construction;

FIG. 5 is a view of one face of the split of the alternative plug construction of FIG. 4;

FIG. 6 is a view illustrating an inner face of one lip portion of a split boot of the device;

FIG. 7 is a view illustrating an outer face of a second lip portion of the split boot of the device;

FIG. 8 is a sectional view taken substantially along line VIII—VIII of FIG. 1.

FIG. 9 is a sectional view taken substantially along line IX—IX of FIG. 1.

FIG. 10 is a top plan view of a multi-purpose adaptor plug according to the invention;

FIG. 11 is a sectional view taken substantially along line XI—XI of FIG. 10;

FIG. 12 is a perspective view, partly in section, illustrating how the adaptor plug of FIGS. 10 and 11 is used and installed;

FIG. 13 is a side elevational view illustrating a modified base configuration which has an intermediate height profile; and

FIG. 14 is a side elevational view illustrating another modified base configuration which has a low profile.

DESCRIPTION OF A PREFERRED EMBODIMENT

Reference numeral 10 generally designates a roof seal device constructed in accordance with the principles of this invention, and shown installed on a roof 11 to provide a seal to a pipe 12 which extends through an opening 13 in the roof 11. The device 10 is designed for installation on an existing roof to replace a defective seal or for installation on an existing roof after extending a pipe through a new opening cut therethrough. It may be used for objects other than pipes, for objects which project upwardly from a roof without extending therethrough. It may also be used in new construction as hereinafter described. Once installed, it provides a permanent waterproof seal.

The device 10 comprises a base generally designated by reference numeral 14 and including a pair of complementary base sections 15 and 16 which are adapted to be joined together along a generally vertical plane in approximate alignment with an object projecting upwardly from a roof, the plane being through the roof opening 13 in the illustrated arrangement. Sections 15 and 16 together provide an upstanding generally tubular portion and a peripheral portion for engagement with the roof surface about the opening therein. Pipe seal means are secured to the upper end of the base and include a split boot 18 of a flexible elastomeric material which preferably has a plurality of annular step portions 19–22 in vertically spaced planes and tubular portions 23–26 progressively smaller diameters joining the inner edge of each of the step portions and the outer edge of the next higher step portion. An additional tubular portion 27 extends around the upper end of the base. The boot 18 is severable along the top edge of a selected one of the tubular portions 23–27 which has a diameter matching that of a pipe within a larger size range, such as from 3½ to 6 inch pipe, for example. For smaller sizes of pipe, a split annular plug 28 is provided.

The plug 28 has an outwardly projecting annular flange 29 which overlies the uppermost tubular portion 26 of the boot 18 and a clamp 30 is disposed around the tubular wall portion 26, a screw 31 being extended through the ends of the clamp 30. As shown in FIGS. 2 and 3, the split of the plug 28 provides two interengaging faces 32 and 33 which are formed on a bias, i.e. at an angle to a radial plane and which are of mating form with alternating grooves and ridges.

In the alternative as shown in FIGS. 4 and 5 a modified plug 28' may be used including a face 32' having a groove 34 receiving a tongue 35 on a face 33'. The modified plug 28' may be formed with a downwardly facing annular groove 36 which receives the uppermost tubular portion 26 of the boot 18, within the clamp. An integral flap portion 37 projects from the upper side of the face 33' and overlies a portion of the plug 28', adjacent the face 32'. In addition, a flap portion 38 is provided on the outside projecting from the outer side of the face 33' and on the outside of a portion of the plug adjacent the face 32'.

Another feature of the plug 28 is in the provision of annular serrations 40 in the central opening of the plug for engagement with the outside surface of the pipe and to improve the sealing action. The serrations are formed by downwardly facing annular surfaces which are at relatively large angles relative to the horizontal and upwardly facing surfaces which are horizontal or at relatively small angles to the horizontal.

It should be noted that the pipe 12 as illustrated is a conventional pipe, but the plug 28 can be used for other types of objects such as angle and channel-shaped members, for example, and the opening in the plug can be shaped as desired or a multi-purpose plug can be used as hereinafter described in connection with FIGS. 10–12. Also, of course, the openings for pipes should have a size corresponding to the outer diameter of the pipe, and, for example, a plurality of plugs may be supplied for pipe sizes of three inches, two and one-half inches, two inches, one and one-half inches, one and one-quarter inches, one inch, three-quarter inch, one-half inch and three-eights inch. The upper face of the plug, as shown, should have a slight pitch.

The boot 18 at the split therein includes a pair of outwardly projecting interengaging lip portions 41 and 42, the portion 41 having a groove 41*a* therein which receives an integral tongue 42*a* formed on the lip 42. The lips 41 and 42 are secured together by a generally channel-shaped clip 44 including side walls 45 and 46 which are formed with notches which register with each other and with the projections formed by the step and tubular portions of the boot. The screw 31, which secures the clamp 30 in place, may also extend through the upper ends of the side walls of the clip 44 and additional screws 47, 48, 49 and 50 have shank portions extended through openings in side wall 45 thence through openings in the lips 41 and 42 and thence into openings in the side wall 46.

An additional feature of the clip 44 is in the provision turned-in portions 45*a*, 45*b*, 45*c* and 45*d* on wall 45 and turned-in portions 46*a*, 46*b*, 46*c* and 46*d* on wall 46 which form teeth engaged in notches in the lip portions 41 and 42. Thus as illustrated in FIG. 7, the outer face of the lip portion 42 is formed with grooves 42*c*, 42*d*, 42*e* and 42*f* receiving the teeth 46*a*, 46*b*, 46*c* and 46*d* and the lip portion 41 is formed with similar grooves receiving the teeth 45*a*–45*d*.

When the boot 18 is severed for use with a larger size of pipe, the clip 44 is correspondingly severed.

The base sections 15 and 16 include supporting parts 51 and 52 which are of molded, strong and substantially rigid plastic material, preferably an acrylonitrite butadiene styrene material, and skirt parts 53 and 54 of a flexible elastomeric material, preferably an ethylene propylene hydrocarbon material. A portion 55 of the supporting part 51 and a corresponding portion of the other supporting part 52 together provide a generally tubular portion of the base and such portions are preferably formed to provide annular rib formations 56 which are provided for engagement with the outside surface of a chimney which may preferably be formed of sheet metal and secured to a roof opening, such being used in new construction. For use on existing construction, the

rib formations 56 do not engage such a chimney device but they are nevertheless advantageous in reinforcing and rigidifying the supporting parts 51 and 52.

The supporting part 51 further includes a portion 57 which together with a corresponding portion 58 of the other supporting part 52 provide a generally frusto-conical support portion.

The skirt parts 53 and 54 include portions 59 and 60 which together define a generally tubular portion surrounding the tubular portion formed by portion 55 of the supporting part 51 and the corresponding portion of supporting part 52. The skirt parts 53 and 54 further include frusto-conical portions 61 and 62 disposed on the outside of portion 57 of part 51 and the corresponding portion 58 of part 52.

In addition, the skirt parts 53 and 54 include portions 63 and 64 disposed against the upper surfaces of outwardly projecting annular flange portions 65 and 66 and parts 51 and 52.

On the outside of the portions 63 and 64, the skirt parts 53 and 54 include peripheral portions 67 and 68 which are bonded to the upper surface of the roof 11 through a suitable adhesive. Prior to installation, an adhesive strip 69 is secured to the underside of the peripheral flange portion 65 of the supporting part 51 and a corresponding adhesive strip 70 is secured to the underside of the corresponding flange portion 66 of the part 52, such adhesive strips being protected by a suitable release paper which is removed prior to installation so that the device can be accurately positioned on the roof, after which the adhesive is supplied between the lower surfaces of portions 67 and 68 of the skirt parts 53 and 54 and the upper surface portions of the roof.

An important feature is in the provision of wall portions 71 and 72 between the portions 63,64 and 67,68 which provide an offset to accommodate the thicknesses of the flange portion 65 and adhesive strip 69 and the corresponding flange portion and adhesive strip on the opposite side. The portions 71 and 72 are also very important in permitting a flexibility such as to accommodate shifts in position as encountered in the extreme temperature and other environmental conditions to which roof structures are subjected.

FIG. 9 shows how edge portions of the two base sections 15 and 16 are secured together. On one side, the supporting part 51 of base section 15 has an edge portion 73 which is offset radially inwardly to extend on the inside of an edge portion 74 of the supporting part 52 of the base section 16. Such edge portions are secured together through a plurality of metal clips one of which is designated by reference numeral 76 in FIG. 9. The clip 76 is of generally S-shaped configuration and the edge portion 73 is lockeld between inner and intermediate portions thereof while edge portion 74 is locked between intermediate and outer portions thereof, such inner, intermediate and outer portions being preferably formed with integral struck-out tooth portions for biting and locking engagement with the edge portions 73 and 74. The same arrangement is used on the other side but with the edge portion of the supporting part 52 being offset inwardly to extend on the inside of the supporting part 51, the supporting parts 51 and 52 thus having the same configuration. Preferably, at least three metal clips are used on each side, one adjacent the top of the generally cylindrical portion of the base, another adjacent the junction between the cylindrical and frusto-conical portions and a third adjacent the lower and outer end of the frusto-conical portion. Prior to assembly each supporting part may carry clips along the edge portion at one side thereof, in position to receive the mating edge portion of the other supporting part.

As shown in FIG. 1, the lowermost tubular portion 27 of the boot 18 has an inwardly facing annular groove 77 which receives an outwardly projecting annular rib or tongue portion 78 of the supporting part 51, a similar annular rib or tongue portion being provided on the other supporting part 52.

When the device is used in connection with extending pipes through or in mounting an object on an existing roof, or in replacing defecting seals around pipes or other objects, the device is preferably provided with the adhesive strips 69 and 70 and with strips of a protective release paper on the undersides of such adhesive strips. As a preliminary step, the roof surface around a pipe or other object to be sealed is prepared to provide a smooth and firm surface with gravel and dirt being swept away in all directions by means of a brush which may be desirable supplied with the device. Also, the two base sections are brought together around the pipe or other object, the edge portions of the supporting parts 51 and 52 being locked together through the clips 76 as above described. Then after removing the strips of release paper from the undersides of the adhesive strips 69 and 70, the base is carefully centered relative to the pipe or other object and is pressed down against the roof, preferably by stepping down on the portions 63 and 64, the adhesive strips 69 and 70 being then effective to securely hold the base in the proper position relative to the pipe or other projecting object.

After so mounting the base, the installer lifts an extending side flap portion of each of the skirt parts 53 and 54 which overlaps a side edge of the other and applies an adhesive between such flap and side edge portion, firmly pressing them together to provide a reliable seal. The user also lifts the peripheral edge portions 67 and 68 of the skirt parts 53 and 54, applies an adhesive between the undersides of such edge portions and the roof surface portions therebelow and then presses the portions 67 and 68 against the roof surface portions to provide a reliable seal.

The boot 18 is then installed and, if desired, an adhesive is applied between interengaging surfaces of the lip portions 41 and 42 after which the clip 44 is installed with the screws 47–50 being inserted and tightened to firmly clamp the lip portions 41 and 42 together.

If the device is used with a pipe or other cylindrical object having a diameter greater than that corresponding to the upper tubular portion 26 of the boot 18, the boot 18 is cut at the upper edge of the appropriate one of the tubular portions 23–25 prior to installation, the clip 44 is also cut at a corresponding level and a clamp similar to clamp 30 is installed around such tubular portion.

If the device is used with a pipe or other cylindrical object having a diameter corresponding to the upper tubular portion 26, the clamp 30 is used to clamp the portion 26 directly to the pipe or other object.

If the device is used with a pipe or other object having a size less than that corresponding to the upper tubular portion 26, the plug 28 is used, being installed in a position as shown after which the clamp 30 is installed with the screw being tightened.

It is noted that the plug 28 may be formed with a central opening having a shape such as to receive projecting objects which do not have cylindrical shapes,

such as square objects, angle irons, etc. It is also possible to use a multi-purpose adaptor plug arrangement as illustrated in FIGS. 10–12, forming an important feature of the invention. An adaptor plug 80 is provided including a split annular wall portion 81 having an outside cylindrical surface engageable with the inner surface of the uppermost tubular portion 26 of the boot 18 and having an internal surface formed with serrations 82 similar to the serrations 40 of the plug 28. An integral projecting annular flange 83 is provided, similar to the flange 29 of the plug 28 and for the same purpose.

The adaptor plug 80 additionally has a bottom 84 which may preferably be quite thin. In use, the plug 80 is positioned on the top of the boot 18 and the bottom 84 is cut, with a razor blade for example, to an extent necessary to permit the plug to be fully inserted in the upper end of the boot 18 and around one or more pipes or other projecting objects. After marking the position of the bottom 84 relative to the projecting object or objects, the plug is temporarily removed and, as shown in FIG. 12, a special thick adhesive tape 85 is wrapped around the projecting object or objects at a level such as to provide support for the bottom 84 when the plug 80 is then reinserted in the boot. Next a mastic 86 is applied into the plug to fill the space around the projecting object or objects and within the annular wall portion 81.

In FIG. 12, the projecting object is shown as being a square tube 86 extending at an angle but it will be understood that the arrangement can be used with a wide variety of shapes, orientations and members of projecting objects. It is also noted that the plug 80 is not limited to use in connection with a split boot and split base arrangement as illustrated but may be used with non-split boots as in new construction, for example.

It is noted that the roof seal device 10 as illustrated in FIG. 1 has what may be described as a high height profile which is desirable for most applications but a modified device 10', FIG. 13, having an intermediate height profile may be used in some applications and another modified device 10", FIG. 14, having a low height profile may be used in other applications. Device 10" may be used, for example, in providing a seal around a pipe which projects to an elbow only a short distance above the level of a roof.

In all three devices 10, 10' and 10" the size of the boot 18 is the same and it projects just slightly less than 4 inches above the top of the curb or base 14, 14' or 14". In FIG. 1 the height of the curb or base 14 is 8 inches; in FIG. 13, the height of the base 14' is 5 inches; and in FIG. 14, the height of the base 14" is only 1¼ inches. In both FIGS. 1 and 13, the overall diameter, including the skirt flange portions 67 and 68 is 20.5 inches and in the low profile base 14" of FIG. 14 it is reduced to 13.625 inches it being noted that the low profile base has no frusto-conical portion. These dimensions are given by way of illustrative example and are not to be construed as limitations except that dimensions and proportions of the same order as described and illustrated are of some importance for obtaining optimum use and performance of the devices.

It is noted that in new construction, the base sections may be secured together prior to use and a sheet metal chimney may be nailed to the new roof about an opening therein after which the base may be inserted on the chimney so secured in position. The device is thus extremely versatile, being usable for both existing and new constructions and being adapted to receive pipes or other objects of a wide variety of sizes and configurations.

It will be understood that modifications and variations may be effected without departing from the spirit and scope of the novel concepts of this invention.

I claim as my invention:

1. In a device for providing a weather-tight seal on a roof around an object projecting upwardly therefrom, a pair of complementary base sections adapted to be joined together along a generally vertical plane in approximate alignment with said object and together providing an upstanding generally tubular portion for surrounding the object and a peripheral flange portion extending outwardly from the lower end of said tubular portion for engaging the upper surface of roofing material about said object, seal means secured to the upper end of said tubular portion for sealing engagement with said object, each of said complementary base sections including a supporting part of a molded, strong and substantially rigid plastic material and a skirt part of a flexible elastomeric material on said support part, each of said skirt parts having edge portions arranged for overlapping interfitting engagement with edge portions of the skirt part of the other section, said skirt parts having peripheral edge portions together providing a downwardly facing surface adapted to engage an annular portion of the upper surface of roofing material about said object, and an adhesive material for sealing and bonding said downwardly facing surface of said skirt parts to said upper surface of said roofing material.

2. In a device as defined in claim 1, said skirt parts being formed of an ethylene propylene hydrocarbon material adapted to withstand temperatures varying over a wide range and adapted to be sealingly secured through said adhesive to the upper surfaces of roofs including both tarred and shingled roofs.

3. In a device as defined in claim 2, said supporting parts being of an acrylonitrite butadiene styrene material.

4. In a device as defined in claim 1, said pipe seal means including a split boot of a flexible elastomeric material for accommodating relative movements of the pipe and roof due to expansion and contraction from heat and cold and to vibrations.

5. In a device as defined in claim 4, said split boot having a pair of engagable lip portions along the split thereof, and a generally channel-shaped metal closure clip arranged to be pressed into said engagable lip portions to press said lip portions together and to provide mechanical support therefor.

6. In a device as defined in claim 4 for use with a cylindrical object, said split boot having a plurality of annular step portions in vertically spaced planes and tubular portions of progressively smaller diameters joining the inner edge of each step portion and the outer edge of the next higher step portion, said boot being severable along the top edge of a selected tubular portion having a diameter matching that of said object.

7. In a device as defined in claim 6, said split boot having a pair of engagable lip portions along the split thereof, and a generally channel-shaped metal closure clip arranged to be pressed onto said engagable lip portions to press said lip portions together and to provide mechanical support therefor, said clip being severable to match the severence of said boot in matching the diameter of said object.

8. In a device as defined in claim 7, said clip including parallel side walls having registering notches for receiv-

ing and interfitting with said step and tubular portions and being severable at the bottom of each notch.

9. In a device as defined in claim 6, a split annular plug defining a central opening for receiving an object having a transverse dimension less than the diameter of the smallest diameter upper end tubular portion of said boot.

10. In a device as defined in claim 9, said split plug having a downwardly facing annular groove receiving said upper end tubular portion of said boot, having at the split thereof mating radially extending tongue and groove means and overhanging flap means, and having inwardly facing annular serrations in said opening for sealing engagement with the object.

11. In a device as defined in claim 8, said clip having pairs of opposed tooth portions adapted to bite into said lip portions adjacent the outer surfaces of said tubular portions.

12. In a device as defined in claim 1, said supporting parts having outwardly extending peripheral edge portions, adhesive means on the underside of said outwardly extending peripheral edge portion of said supporting parts for securing said supporting parts to said roof, said peripheral edge portions of said skirt parts extending outwardly beyond said peripheral edge portions of said supporting parts for providing said downwardly facing surface of said skirt parts.

13. In a device as defined in claim 12, said skirt parts having portions together defining an annular wall projecting upwardly from inner edges of said peripheral edge portions of said skirt parts on the outside of said peripheral edge portions of said supporting parts.

14. In a device as defined in claim 1, said seal means including a plug having a split annular wall adapted to encircle an object and having a relatively thin bottom wall adapted to be cut for extension of the object therethrough, said plug being adapted to be filled with a mastic material.

15. In a device for providing a weather-tight seal on a roof about an object projecting upwardly therefrom, seal means for providing a seal between the object and the upper end of a tubular portion which surrounds the object, said seal means including a plug having a split annular wall adapted to encircle an object and having a relatively thin bottom wall adapted to be cut for extension of the object therethrough, said plug being adapted to be filled with a mastic material.

16. In a device as defined in claim 15, adhesive tape means adapted to be wrapped around the object below said bottom for support of said bottom during filling of said plug with a mastic material.

* * * * *

United States Patent [19]

Ericson

[11] **4,318,547**

[45] **Mar. 9, 1982**

[54] **DEVICES USED FOR THE CONNECTION OF PIPES**

[76] Inventor: **Kurt S. B. Ericson**, 48, Prins Boudewijnlaan at B-2230, Schilde, Belgium

[21] Appl. No.: **145,729**

[22] Filed: **May 1, 1980**

[30] **Foreign Application Priority Data**

May 4, 1979 [BE] Belgium 876033

[51] **Int. Cl.**[3] **F16J 9/00; F16J 15/10; F16L 17/00**

[52] **U.S. Cl.** ..... **277/207 A; 277/DIG. 2; 285/3; 285/27; 285/110; 285/177**

[58] **Field of Search** ..... 277/207 A, 9.5, 11, 277/208, 32, 178, 207 R, DIG. 2, 209; 285/3, 4, 24, 27, 177, 110

[56] **References Cited**

U.S. PATENT DOCUMENTS

3,414,273	12/1968	Sumner	277/11
3,493,236	2/1970	Kleindienst	277/207 A
3,654,965	4/1972	Gramain	285/4
3,857,589	12/1974	Oostenbrink	277/207 A
3,913,928	10/1975	Yamaguchi	277/207 A
4,211,423	7/1980	Resech	285/4

FOREIGN PATENT DOCUMENTS

1069239	5/1967	United Kingdom	285/110
163414	9/1969	United Kingdom	285/177

Primary Examiner—Robert I. Smith

[57] **ABSTRACT**

A device for the connection of pipes of whatever section or of pipes with elements forming part of a plant such as housings or tubular bodies of whatever section provided in automatic valves or other apparatus. The device comprises a muff of a flexible material provided on its inner periphery with a tightening membrane in the shape of a lip or of a hat. The device is characterized by cooperation with the lip of guiding or centering means for the pipes to be introduced. The guiding or centering means consist of a piece (6) formed of a series of rings (7, 8, 9) of different sizes which are coaxially maintained in their respective places by cross pieces (10). The outer ring (9) of the centering piece is connected by arms or holders (11) to a fixing collar (ring) (12) which in general is introduced into a groove (13) provided in the interior of the muff.

4 Claims, 4 Drawing Figures

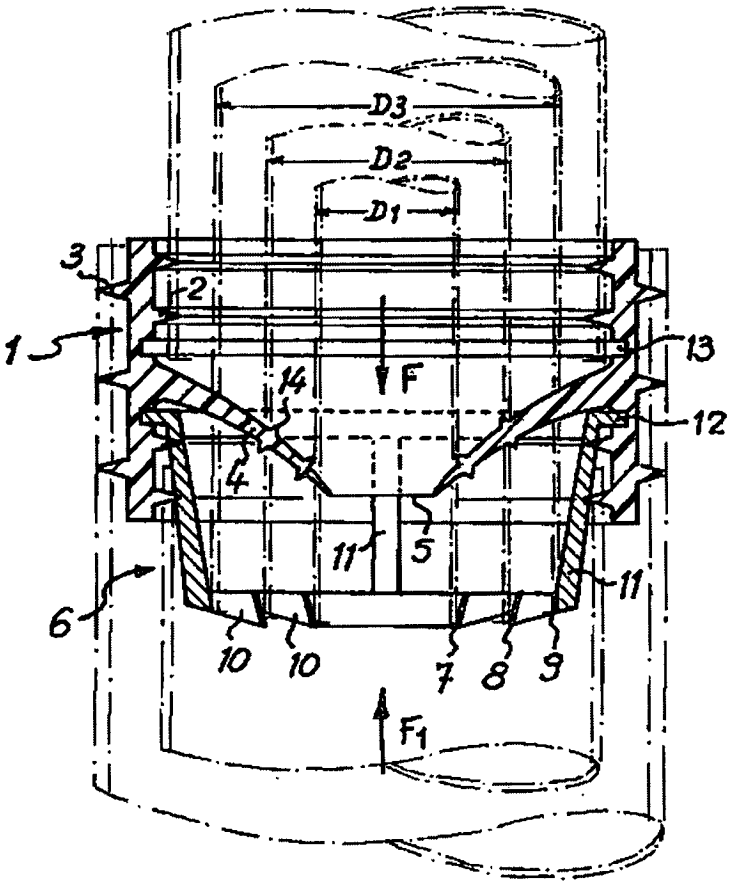

FIG.1

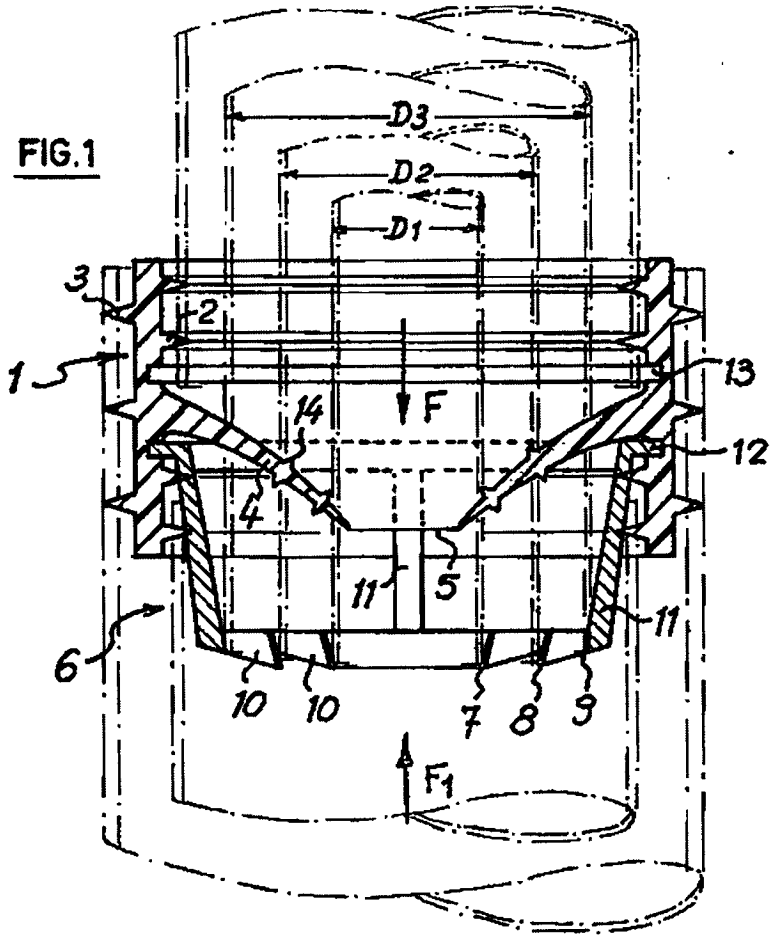

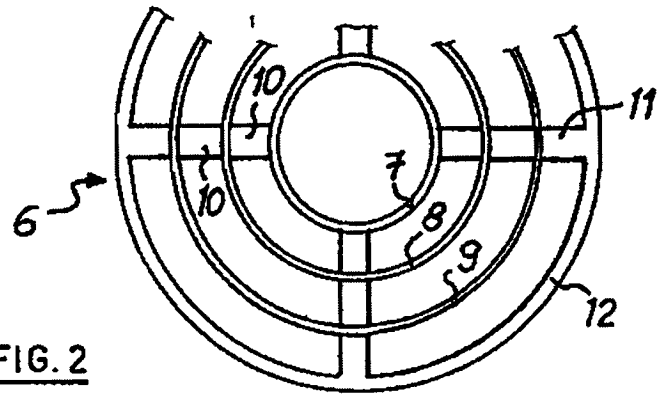

FIG. 2

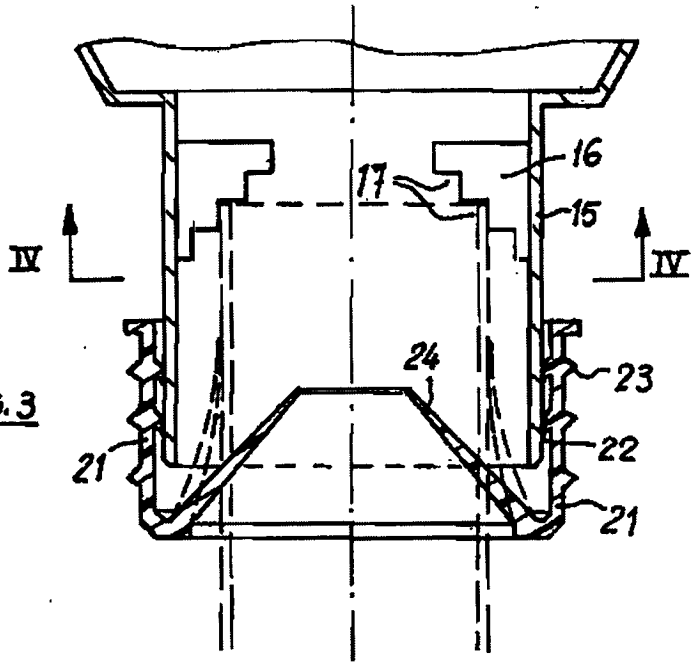

FIG. 3

FIG. 4

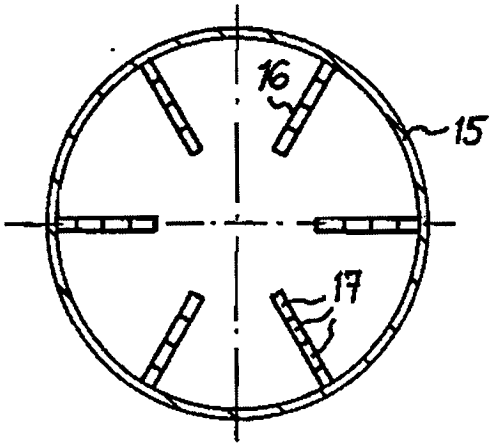

DEVICES USED FOR THE CONNECTION OF PIPES

The present invention relates to devices for the connection of pipes or of pipes with elements such as housings or tubular bodies provided in automatic valves or other apparatus, for instance, those in conduits for the evacuation of sanitary waste water.

In apparatus of that kind, piping systems for different media (gas, liquids or mixtures) and purposes are constructed to transport these media in different quantities and capacities in the same construction or plant.

Now, use is made of pipes having different dimensions (diameters) and in order to execute connections between pipes there is a need of a big number of pieces or reductions corresponding to the different diameters.

The invention has for its object to give the possibility of connecting a pipe of whatever section or a tubular member having a given size or diameter with pipes or elements of different sizes or diameters by making use of very simple means so as to obtain a connection of an absolute universal type while enabling the obtention of an absolutely efficacious tightness and a perfect guiding or steering of the elements to be connected.

With this object in view, the device making the subject matter of the invention comprises a muff of a flexible material provided on its inner periphery with a tightening membrane in the form of a lip or of a hat, the device being essentially characterized in that with the lip cooperate guiding or steering and centering means for the pipes to be connected.

In the practical embodiment of the invention, there may be provided as guiding means a piece formed of a series of rings of different sizes or diameters which are coaxially maintained one with respect to the other by cross-pieces, the outer ring of the centering piece being connected by arms or holders to a fixing collar or ring which in general is introduced into a groove provided in the interior of the muff.

On the annexed drawings:

FIG. 1 is a cross-sectional view representing as an example a connecting muff with guiding piece.

FIG. 2 is a plan view which represents a guiding or centering piece for a pipe having a smaller diameter than the diameter of the muff.

FIGS. 3 and 4 relate to a special application of the invention.

On FIG. 1 there has been represented a connecting piece formed of a muff or body 1 the inner and outer walls of which are in the example shown provided with peripheral teeth 2–3.

This piece is of a homogeneous flexible material generally of a plastic material.

Inside the body or muff 1 there is a flexible membrane 4 in the form of a lip which by its outer extremity is bodily connected with the inner wall of the muff 1 and which projects towards the longitudinal axis of the muff 1 leaving a central opening 5.

As shown on FIG. 1 in dotted lines, owing to the presence of this membrane it is possible to introduce in the interior of the muff 1 pipes of different diameters (D, D_2, D_3), those diameters being smaller than the inner diameter of the muff 1.

Whatever may be the diameter of the pipe which is introduced the lip 4 becomes deformed and tightly engages the pipe which has been introduced.

Obviously the diameters D_1, D_2, D_3 may have any whatever dimensions.

The muff 1 itself may be introduced in the inside of a pipe having a greater diameter. In this case the teeth 3 provided at the exterior of the muff will give the tightness.

The muff 1 may also be pushed on a pipe having a lower diameter; the inner teeth 2 serve in this case as tightening rings.

However this pushing is limited by the lip 4 situated in substance at the middle of the muff 1.

Due to the teeth 2,3, it is possible to obtain tightening connections taking care of the tolerances and overbridge variations in different norms (ASTH, SIS, ISO, etc.).

According to the invention in order to obtain an efficacious tightening connection between the lip 4 and a pipe of lower diameter, a guiding means for the latter is provided in order to maintain the pipe in an axial position in the muff 1.

In the case of FIG. 1 relating to the connection of pipe between themselves use is made of an element or piece 6 composed of a series of different steering rings 7, 8, 9 of different diameters coaxially maintained one with respect to the other by cross-pieces 10 bodily connected with those rings; the outer ring 9 being connected by arms or holders 11 with a fixing ring or collar 12 introduced into a groove inside the muff 1.

It will be easily understood that if the ring 7 having the smallest diameter is removed with the corresponding cross-pieces 10, for instance by cutting or breaking the same off a pipe of greater diameter (D_2) may be introduced, being guided by the ring 8 of greater diameter.

If a pipe of diameter D_2 is introduced in the device, the lip 4 will produce the tightness and if the pipe is pushed a bit further, it will be guided by the ring 8 corresponding to the diameter D_2.

On the lip 4, inside and outside of the latter, small annular teeth 14 may be provided in order to improve the tightening with respect to the pipe to be connected.

An important feature is that a groove 13 for the reception of the centering piece 6 may exist on each side of the lip 4 so as to enable the positioning of the guiding piece 6 in two different positions and consequently the introduction of pipes from one or the other direction (F or F_1).

As will be understood the invention permits to obtain an absolutely perfect connection due to the tightening elements themselves and to the steering.

Such a connection may be considered as being "universal" in a device such as represented in FIG. 1 comprising a muff 1 with teeth 2–3 and lip 4, whatever may be the diameters.

FIGS. 3 and 4 represent the connection between pipes of different diameters and a tubular body 15 of any whatever section (circular, polygonal, etc.) forming part of a plant of any kind.

A connecting piece 21 executed according to the same principles with teeth 22 on the inside and or teeth 23 on the outside and with a lip 24 is used.

The centering of the inner pipes is obtained in this case by providing on the inner periphery of the tubular body 15, projections 16 (in the number of six in the example) each comprising a staggered portion 17 for the reception of pipes of different diameters.

The connecting devices according to FIGS. 3 and 4 may be advantageously used in automatic valve devices

for sanitary plants for the evacuation of waste water, for example for the valves described and claimed in "U.S. Pat. No. 4,232,706 of the applicant in which there is" made use of a single type of automatic valve for the connection of pipes of different diameters.

What I claim is:

1. A device for connecting tubular elements of different sizes, said device comprising a muff of flexible material provided on its inner periphery with a tightening membrane in the shape of a lip, and guiding or centering means for the tubular elements to be introduced, said means being constituted by a series of rings of different sizes which are coaxially maintained one with respect to the other by cross-pieces, the outer ring of said means being connected by arms to the muff.

2. A device as claimed in claim 1 in which said arms are connected to a fixing ring introduced into a groove on the inner periphery of the muff.

3. A device as claimed in claim 2 in which a groove for the reception of the means exists on each side of the membrane whereby the positioning of the means in two different positions and the introduction of pipes from one or the other direction is rendered possible.

4. Device according to claim 1 in which the inner and/or outer walls of the muff are provided with peripheral teeth in such a manner that when the muff is introduced inside a pipe of a greater or smaller size the outer or inner teeth of the muff respectively are used as tightening rings.

* * * * *

United States Patent [19]

Carlesimo

[11] **4,342,462**

[45] **Aug. 3, 1982**

[54] **ADJUSTABLE SEAL MEMBER FOR CONDUIT TO MANHOLE JUNCTION**

[76] Inventor: John Carlesimo, 29800 W. 8 Mile Rd., Farmington, Mich. 48024

[21] Appl. No.: 59,028

[22] Filed: Jul. 20, 1979

Related U.S. Application Data

[62] Division of Ser. No. 904,426, May 10, 1978, Pat. No. 4,200,299.

[51] Int. Cl.[3] F16J 15/10; F16L 25/00

[52] U.S. Cl. ..... 277/101; 277/152; 277/207 R; 277/DIG. 2; 285/4

[58] Field of Search ..... 285/4, 177; 277/207, 277/207 A, 99.5, 101, 152, 27, DIG. 2

[56] **References Cited**

U.S. PATENT DOCUMENTS

3,603,618	9/1971	Stratton	277/101
3,973,783	8/1976	Skinner et al.	277/207 A
4,103,901	8/1978	Ditcher	277/277 A
4,199,157	4/1980	Skinner	277/101
4,211,423	7/1980	Reseck	285/4

Primary Examiner—Robert I. Smith
Attorney, Agent, or Firm—Hauke and Patalidis

[57] **ABSTRACT**

An adjustable seal member for effecting a leak-proof junction between a conduit and an opening in the sidewall of a manhole well in an underground sewer installation. The seal member, made of elastomeric material, is in the form of a flanged sleeve which is disposed about the periphery of the conduit and which is clamped over the conduit by means of a steel strap clamp. The flange is embedded in the concrete or cement of the manhole well structure in the edge of the opening in the manhole. The sleeve is adjustable to diverse conduit sizes within a range by having a plurality of increasing internal diameter portions for fitting conduits of different outer diameters within the range to insure relatively close fit between the internal surface of the sleeve and the external surface of the conduit. In the alternative, the sleeve is provided with a flap integrally formed with the remaining of the sleeve body and with a pyramidal integral portion which can be folded over to adjust the internal diameter of the sleeve to an appropriate conduit size. The invention further contemplates providing a seal member with a sleeve portion on both sides of the flange for clamping the second sleeve portion over the conduit in the inside of a manhole well.

2 Claims, 13 Drawing Figures

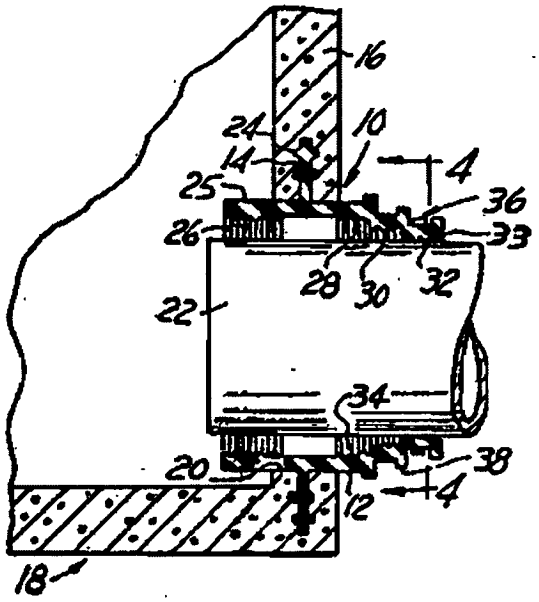

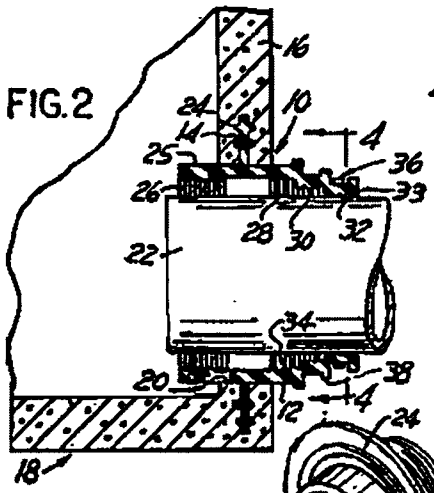

FIG. 2

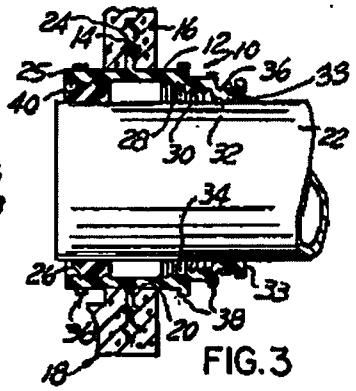

FIG. 3

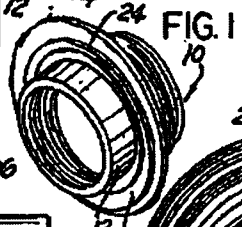

FIG. 1

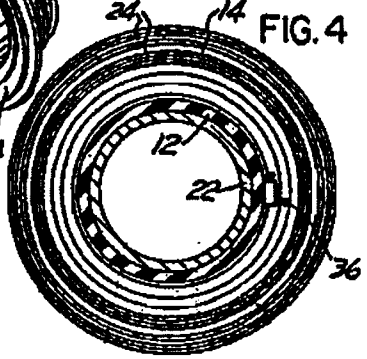

FIG. 4

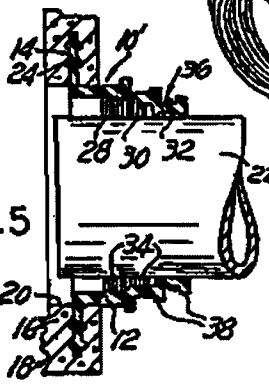

FIG. 5

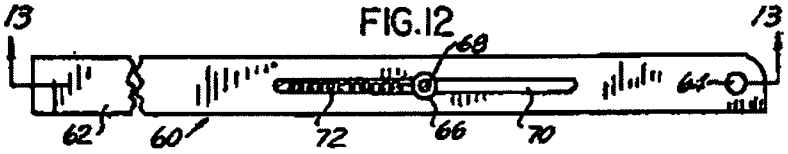

FIG. 12

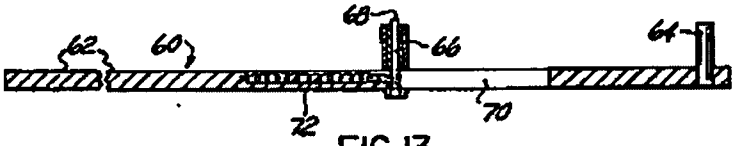

FIG. 13

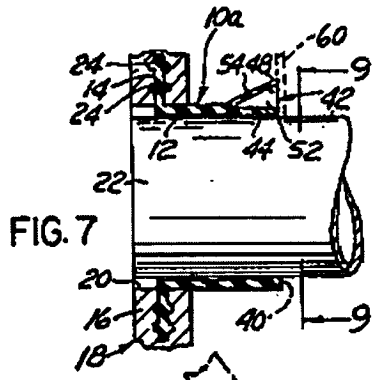

FIG. 7

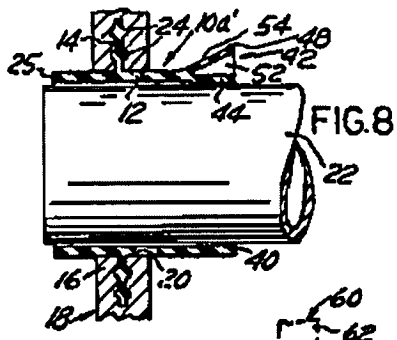

FIG. 8

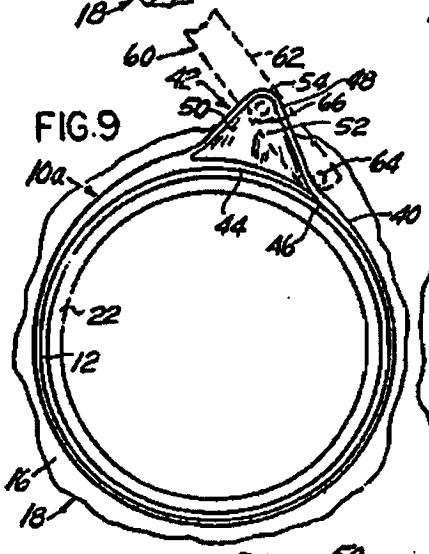

FIG. 9

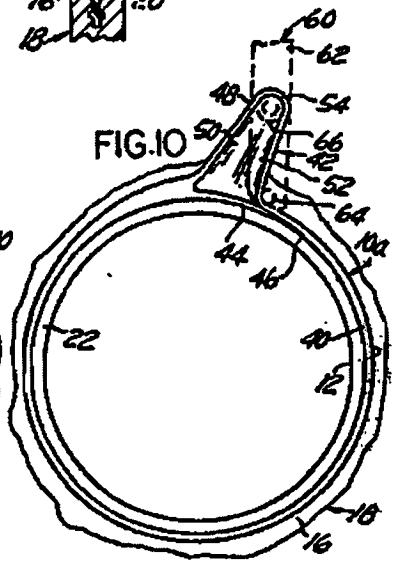

FIG. 10

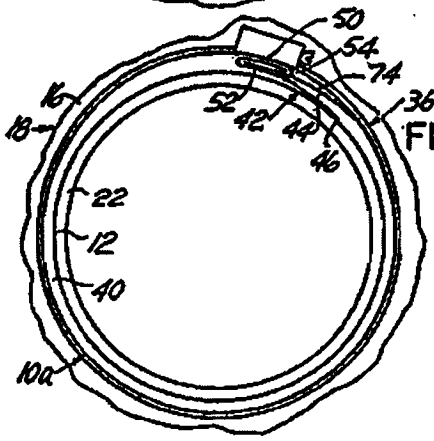

FIG. 11

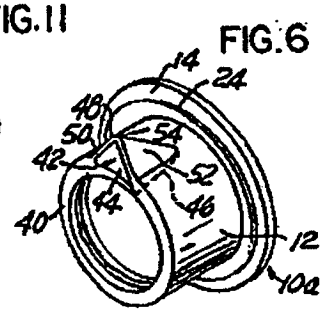

FIG. 6

ADJUSTABLE SEAL MEMBER FOR CONDUIT TO MANHOLE JUNCTION

This is a division of application Ser. No. 904,426, filed May 10, 1978, now U.S. Pat. No. 4,200,299.

BACKGROUND OF THE INVENTION

The invention relates to a seal member for effecting a leak-proof joint between an underground conduit and a structure such as a manhole well.

Different methods have been used in the past for effecting a coupling seal between an underground pipe or conduit and a manhole well provided with an aperture through which the end of the conduit is passed for leading to the interior of the manhole well. Such couplings may be effected by means of a bell-shaped packing or seal closely fitting the peripheral surface of the conduit and partially embedded in concrete or cement poured around the seal at the junction between the conduit and the aperture in the manhole well, or by forcing a packing into the space between the peripheral surface of the conduit and the edge of the aperture. Couplings of this type are disclosed in U.S. Pat. Nos. 2,087,752, 2,657,079, 3,591,190, 3,744,806, 3,787,061, 3,879,067 and 3,348,850.

Another method for effecting a seal between a conduit and a manhole well consists in placing a flanged seal member through the manhole well opening and clamping the flange over the aperture or embedding it in concrete or cement, the sleeve or boot portion of the seal member projecting outwardly from the manhole well opening. The end of the conduit is passed through the sleeve and the sleeve is clamped against the peripheral surface of the conduit by means of a steel strap clamp. A coupling of this type is disclosed in U.S. Pat. No. 3,759,280.

Underground conduits, usually made of clay, concrete, asbestos, plastic, such as polyvinyl chloride, or sometimes cast iron, generally have a rough outer surface, and are subject to wide variations in roundness and in outer diameter size dimensions. Often, conduits of a desired size are not immediately available on the market, and a contractor may be forced to utilize underground conduits of a slightly different outside diameter than the one contemplated.

Furthermore, it often happens that through use and aging, and due to settling of the ground in which an underground sewer system is buried, that bending moments and sheer forces are applied at the joints between the conduits and the manhole well openings causing undesired leakage from the manhole well to the surrounding ground or from the surrounding ground into the manhole well.

SUMMARY

The inconveniences and shortcomings of the prior art are remedied by the present invention which provides an elastomeric seal member forming a junction between a manhole well opening and the conduit fitted to that opening, which is adjustably adaptable to variations in conduit outer diameter sizes for insuring a relatively close fit between the seal member inner surface and the conduit outer surface and which, in a modification thereof, permits to re-establish a leak-proof seal within the manhole well without excavating the ground in the event that the leak-proof joint deteriorates with the passage of time.

The present invention accomplishes its purposes by providing a seal member in the form of a flanged sleeve made of elastomeric material. The flange portion of the seal member, preferably provided with projecting annular ribs, is normally embedded in cement or concrete in the manhole well opening, and is molded integrally with a sleeve portion projecting outwardly of the manhole well structure for clamping by means of a strap or ring clamp about the periphery of the conduit. The sleeve internal diameter progressively decreases in steps and by small increments, such as to provide a relatively close fit with the peripheral surface of conduits of various outer diameter sizes within a range, the smaller diameter portion or portions of the sleeve being removed when it is necessary to accommodate a conduit of an outside diameter corresponding to a larger diameter section of the sleeve. Alternatively, the sleeve is provided with a lip portion, proximate its end, whose diameter is adjustable within a range, as a result of being provided with an integral flap portion and a folded over portion conforming to the diameter of the conduit, after which the flap and the folded over portion, together with the rest of the sleeve lip, are clamped over the conduit by means of a steel strap clamp.

In addition, the present invention contemplates providing a sealing member having an inwardly projecting integral sleeve portion, that is a portion projecting inwardly into the manhole well, permitting to re-establish a leak-proof seal in the event that the portion of the sleeve projecting to the outside of the manhole well becomes damaged, or that the corresponding clamp is damaged, or that, for any other reason, leakage develops.

The many objects and advantages of the invention will become apparent to those skilled in the art when the following description of the best mode contemplated for practicing the invention is read in conjunction with the accompanying drawing wherein:

BRIEF DESCRIPTION OF THE DRAWING

FIG. 1 is a perspective view of an example of conduit to manhole opening seal member according to the present invention;

FIG. 2 is a longitudinal section of the seal member of FIG. 1 illustrated in position in a manhole opening for effecting a seal between a conduit and the interior of a manhole well;

FIG. 3 is a view similar to FIG. 2 but showing the seal member of the invention in use for effecting a seal with a conduit in the inside of a manhole well;

FIG. 4 is a transverse section from line 4—4 of FIG. 2.

FIG. 5 is a view similar to FIG. 2 but showing a modification of the invention;

FIG. 6 is a perspective view of a further modification of the invention;

FIG. 7 is a longitudinal section through the seal member of FIG. 6 illustrated in position in a manhole well opening with a conduit disposed therethrough;

FIG. 8 is a view similar to FIG. 7 but showing a modification thereof;

FIG. 9 is an end view from line 9—9 of FIG. 7 showing the lip of the seal member of FIG. 7 in the process of being tightened about the periphery of the conduit;

FIG. 10 is a view similar to FIG. 9 and showing the relative position of the elements of the seal member with the lip thereof in engagement with the peripheral surface of the conduit;

FIG. 11 is a view similar to FIG. 10 but showing the seal member of the invention clamped about the periphery of the conduit;

FIG. 12 is a plan view of a tool for tightening the lip of the seal member of FIGS. 7-11 about the periphery of a conduit; and

FIG. 13 is a longitudinal section thereof at line 12—12 of FIG. 12.

DETAILED DESCRIPTION OF THE PREFERRED EMBODIMENTS

Referring to FIGS. 1-4, a sealing member 10 for a manhole well opening to a conduit seal, according to the present invention, is in the form of a tubular body comprising a sleeve 12, molded of elastomeric material, provided with an integral outwardly flared annular flange 14. As shown at FIGS. 2 and 3 the annular flange 14 of the seal member 10 is normally embedded in the concrete or cement of the wall 16 of a manhole well 18 surrounding an opening 20 through the wall. The end of a conduit 22 is placed through the sleeve 12. In order to provide a good anchorage in the concrete of the manhole well 16, and an effective dam against water seepage, the seal member annular flange 14 is provided with a plurality of concentric ribs 24 on both its faces. One end 25 of the sleeve 12 projects on the inside of the manhole well 18 and is provided internally with parallel ribs 26. The other end of the sleeve 12, that is the end projecting outside of the manhole well 18, is formed with successive step-like integral portions of diameter progressively decreasing by increments, three of which are illustrated in the drawing, as shown at 28, 30 and 32, all preferably also provided internally with parallel ribs 34.

In the configuration illustrated at FIGS. 2 and 3, the outside diameter of the conduit 22 fits the smaller inner diameter portion 32 of the outwardly projecting sleeve portion of the seal member 10, and an adjustable clamp 36, in the form of an adjustable steel band or strap, tightens the lip 33 of the outwardly projecting portion of the sleeve 12 of the seal member 10 about the peripheral surface of the conduit 22. Radially projecting parallel annular ribs 38 may be formed on the peripheral surface of the sleeve 12 proximate the lip 33, each pair of annular ribs corresponding to an internal diameter section 28, 30 and 32, and aiding in holding an appropriate clamping adjustable strap 36 in position.

It is readily apparent that if a conduit 22 having an outside diameter slightly larger than that illustrated in the drawing is used, the smallest diameter portion 32 of the sleeve 12 is cut off, either alone or together with the intermediary diameter portion 30 if necessary, so as to fit properly with a small clearance the peripheral surface of the conduit 22, after which a clamping strap band 36 is placed over the periphery of the sleeve 12 and appropriately tightened.

Once an installation, such as a sewer system consisting of conduits laid in trenches leading from and into diverse manhole wells, has been buried underground and has been operating for a certain period of time under adverse conditions, undesired leakages from the manhole wells to the soil surrounding the manhole wells, or from the soil into the manhole wells may develop. With conventional manhole well openings to conduit sealing devices, when such a leakage occurs it is either ignored or, if it is desired to repair the damages, the ground must be excavated to reach a conduit to manhole well seal, and the seal repaired or changed. The structure of the seal member 10, illustrated at FIGS. 1-3, permits to effectuate such repair without excavating or, in the alternative, it permits to provide each conduit to manhole opening junction with a double seal arrangement when the sewer system is first built. For that purpose, it is only necessary to initially install the conduit 22 through the manhole opening 20 such that the end of the conduit 22 projects within the manhole well 18 a distance corresponding approximately to the distance to which the end 25 of the seal member sleeve 12 projects within the manhole well 18. With a conduit 22 having an outside diameter corresponding substantially to the larger inner diameter portion 28 of the sleeve 12, undesirable leakage is stopped by placing a clamping strap 36 about the periphery of the sleeve 12 proximate its end 25, and tightening the clamp. A second, inner seal is thus effected between the conduit 22 and the seal member 10. In installations using a conduit 22 having an outside diameter corresponding to the inner diameter portions 30 or 32 of the sleeve, an annular gasket 40, FIG. 3, is interposed between the peripheral surface of the conduit 22 and the inner surface of the sleeve 12, proximate its end 25, before tightening the clamping strap 36.

FIG. 5 illustrates a seal member 10' similar to the seal member 10 of FIGS. 1-4, wherein, however, the portion of the sleeve 12 projecting within the manhole well 18 is omitted, the sleeve 12 ending flush with the integral annular flange 14.

The seal members 10a and 10a' illustrated at FIGS. 6-11 are also molded of elastomeric material, have a body forming a sleeve 12 provided with an integral annular flange 14 preferably provided with concentric annular ribs 24 for embedding in the concrete of the wall 16 of a manhole well 18 surrounding an opening 20 in which is disposed a conduit 22. The sleeve 12 projects to the outside of the manhole well 18 around the conduit 22, and is provided with a lip 40 having an adjustable portion 42. The adjustable lip portion 42 comprises an underlying integral flap 44 having a slanted edge 46, FIG. 6, relative to the longitudinal axis of the sleeve 12, which is disposed about a portion of the periphery of the conduit 22, and which is bridged by a continuous portion of the wall of the sleeve 12 forming a pyramidal appendage 48. The integral pyramidal appendage 48 is defined by two integral triangular panels 50 and 52 joined at an apex 54 rearwardly tapering towards the peripheral surface of the sleeve 12.

For the purpose of applying the lip 40 and the corresponding inner surface of the sleeve 12 firmly against the peripheral surface of the pipe 22, a tool 60, illustrated in detail at FIGS. 12-13, is used for folding over the pyramidal appendage 48. The tool 60 comprises a steel bar 62 provided with a fixed pin 64 at one end and a longitudinally displaceable rotatable roller 66 proximate that end. The roller 66 is mounted on a support shaft 68 longitudinally slidable in a slot 70 and constantly pulled away from the pin 64 by a coil spring 72. In use, and as schematically illustrated at FIGS. 9-10, the roller 66 of the tool 60 is placed within the pyramidal appendage 48 on the inside of the apex 54 thereof, the pin 64 is engaged with the outer surface of the triangular panel portion 52 at its junction with the remaining of the body of the sleeve 12, as shown at FIG. 9, and the end of the bar 62 of the tool 60 is pulled clockwise to fold the triangular panel 50 over the triangular panel 52 while pulling the interior surface of the sleeve 12 proximate the lip 40 thereof in tight engagement with

the peripheral surface of the conduit 22, the pulling pressure being dependent on the leverage exerted by the length of the bar 62 and the strength of the spring 72. Once the triangular panels 50 and 52 are folded over one another, the flap 44 and the internal surface of the sleeve 12 proximate the lip 40 are in tight engagement with the peripheral surface of the conduit 22, and one or more clamping straps 36, FIG. 11, are tightened around the periphery of the sleeve 12. The inner surface of the strap of the clamp 36 is preferably provided with a wedge element 74 integral therewith, or a separate wedge member 74 is placed below the strap so as to fill the wedge-shaped space between the apex 54 of the folded over triangular panels 50 and 52 and the peripheral surface of the sleeve 12 proximate the lip 40.

It can thus be seen that the seal member 10a of FIGS. 6–11 has a lip 40 which is adjustable to diverse conduit outside diameters, within a range. If it is desired to provide the seal member 10a with the added feature of permitting to re-establish a leak-proof seal from the inside of a manhole well, the sealing member structure 10a' of FIG. 8 is used, having a sleeve 12 with a portion having an end 25 projecting through the manhole well opening 20 to the interior of the manhole well 18, such that a clamping strap, not shown, can be placed over the periphery of the sleeve 12 on the inside of the manhole well, proximate the end 25 of the sleeve and tightened to effectuate a sealing engagement between the internal surface of the sleeve proximate the end 25 and the periphery of the portion of the conduit 22 projecting within the manhole well 18, without or with a gasket interposed, as the case may be depending on the outer diameter of the conduit 22.

It will be appreciated that the outwardly flared annular flange 14 of every embodiment of the invention may be clamped over the surface of the wall 16 of the manhole well 18 surrounding the opening 20, either on the inside or on the outside of the manhole well by means of an appropriate clamping ring and appropriate studs and nuts, not shown, instead of being embedded in concrete or cement as described and illustrated.

Having thus described the present invention by way of examples of structural embodiments thereof, modification whereof will be apparent to those skilled in the art, what is claimed as new is as follows:

1. In a junction between a manhole well and a conduit having a generally cylindrical peripheral surface and an end disposed within an opening in a wall of said manhole well projecting within said manhole well, a one-piece seal member having a substantially cylindrical tubular body of elastomeric material comprising a sleeve having a first end portion projecting outwardly from said opening in clamped sealed relationship to the peripheral surface of said conduit and an integral outwardly flared annular flange in sealing engagement with the edge of said opening, wherein the first end portion of said sleeve in clamped sealed relationship to the peripheral surface of said conduit has an internal diameter adjustable within a range to conform to the outer diameter of said conduit, said first end portion of said sleeve comprising a plurality of contiguous integral stepped annular portions of decreasing external and internal diameters from proximate said flange to the end of said end portion, a plurality of substantially parallel annular ribs peripipherally integrally formed on said end portion, each pair of adjacent ribs corresponding to one of said decreasing external and internal diameter annular portions and defining a holding means therebetween for an adjustable strap clamping said end portion to the peripheral surface of said conduit and a plurality of circular parallel ribs integrally formed on the internal surface of each of said stepped portions, said sleeve further comprising a second end portion projecting within said manhole well surrounding the end of said conduit projecting within said manhole well, and means for clamping said sleeve second end in sealed relationship to the peripheral surface of said end of said conduit projecting within said manhole well.

2. The seal member of claim 1 wherein said means for clamping said sleeve second end comprises an adjustable strap clamping said sleeve second end to the peripheral surface of said conduit and projecting within said manhole well, and an annular gasket optionally disposed around said peripheral surface for compensating for difference in size between said conduit and said sleeve second end.

* * * * *

United States Patent [19]

Katz

[11] **Patent Number: 4,535,998**

[45] **Date of Patent: Aug. 20, 1985**

[54] **SEALING DEVICE FOR HYDRAULIC ENERGY DISSIPATOR OF THE TELESCOPIC TYPE**

[75] Inventor: **Maurice Katz**, Paris, France

[73] Assignee: **Creusot-Loire**, Paris, France

[21] Appl. No.: **579,938**

[22] Filed: **Feb. 14, 1984**

[30] **Foreign Application Priority Data**

Feb. 18, 1983 [FR] France 83 02645

[51] **Int. Cl.**[3] **F16J 15/18**

[52] **U.S. Cl.** ..... **277/212 FB**

[58] **Field of Search** ..... 277/212 R, 212 FB

[56] **References Cited**

U.S. PATENT DOCUMENTS

3,688,523	9/1972	Schafer	277/212 FB
4,116,115	9/1978	Gross et al.	277/212 FB
4,211,423	7/1980	Resech	277/212 FB

Primary Examiner—Robert I. Smith

Attorney, Agent, or Firm—Pollock, Vande Sande & Priddy

[57] **ABSTRACT**

Sealing device for an hydraulic energy dissipator of the telescopic type, formed by a seal comprising a cylindrical ring which grips the rod of the piston and which is extended by a fluid-tight bellows so as to permit axial movement of the seal in its housing following small amplitude movements of the rod. The device is useful for railway suspension shock absorbers.

8 Claims, 3 Drawing Figures

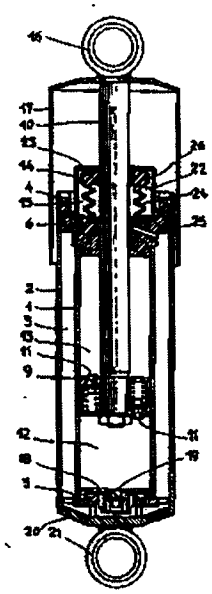

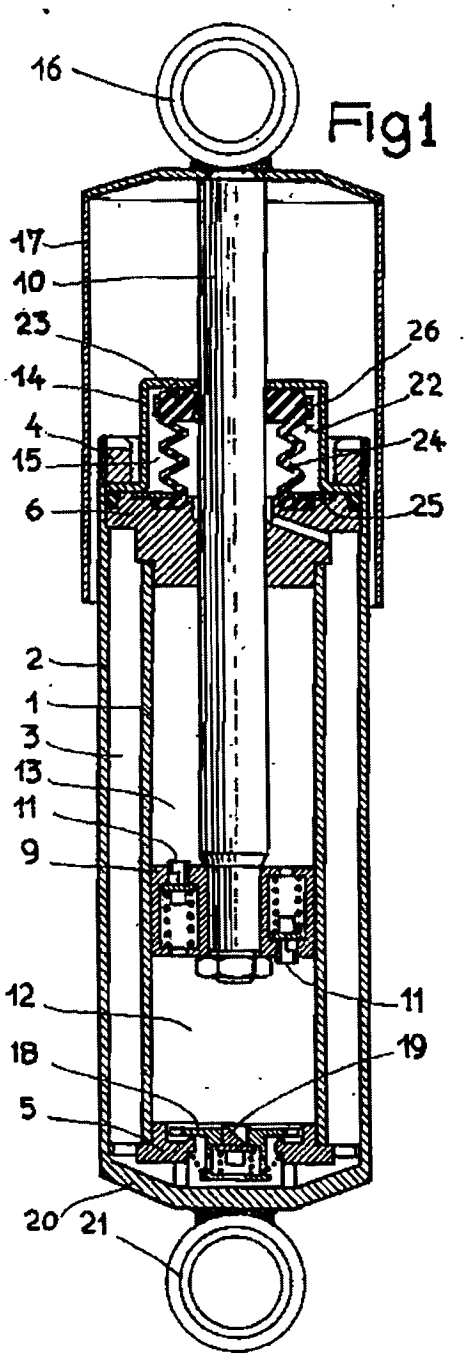
Fig1
16
17
10
23
14
4
15
6
26
22
24
25
2
1
3
13
11
9
12
18
5
20
21
11
19

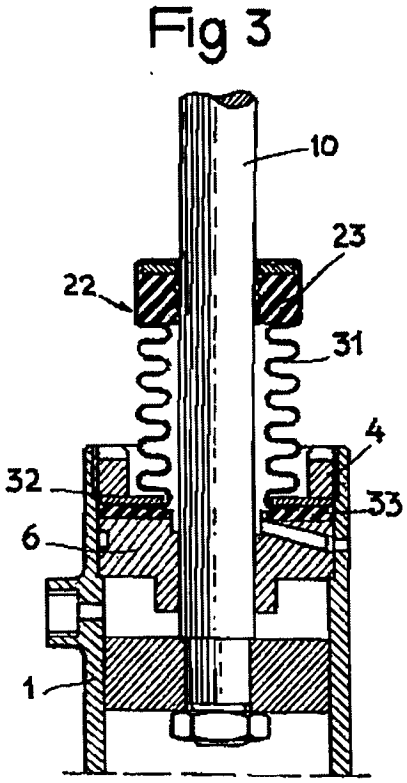
Fig 3
10
23
22
31
4
32
33
6
1

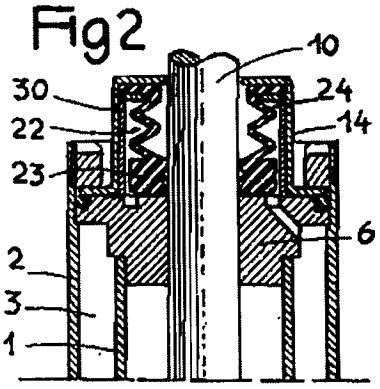
Fig2
10
30
24
22
14
23
6
2
3
1

SEALING DEVICE FOR HYDRAULIC ENERGY DISSIPATOR OF THE TELESCOPIC TYPE

FIELD OF THE INVENTION

The present invention relates to a sealing device for an hydraulic energy dissipator of the telescopic type, particularly for railway rolling stock suspensions.

BACKGROUND OF THE INVENTION

For such suspensions, it is known that damping devices which dissipate the mechanical energy as heat by shearing of oil driven by a piston through throttled passages, does not incorporate all the characteristics desired, and in particular lacks insufficient reliability.

In fact, the most common damping devices, of the telescopic piston type actuated by a rod in a cylinder filled with oil, do not generally permit suitable damping of oscillating movements of small amplitude or vibrations generated by the wheels, since they are easily initiated at rest and then necessitate long paths with oscillations of large amplitude to return to the normal operating stage. However the piston sucks in first, in each direction of movement, the air dissolved in the oil; on its return, this creates a vacuum causing the cavitation phenomenon manifested by particularly unpleasant hard and violent jerks.

To overcome these drawbacks, shock-absorbers are known in which a slight permanent overpressure of the liquid completely filling the working chambers is maintained, by means of a compensating chamber where the reserve liquid is itself kept under pressure by spring or pneumatic devices.

However, in the field of railway suspensions, it is known that the oscillations to be damped are in the majority of cases vibrations of small amplitude with, from time to time, one or several distinctly bigger oscillations.

This causes a sealing problem around the rod of the piston in its passage through the jacket of the apparatus. In fact, if seals are used with considerable friction on the rod, the small oscillating movements are transmitted through the seals to the whole of the body. It is possible to reduce the friction a little so as to permit between the rod and the seal small amplitude movements which are then damped by the working of the fluid in the chambers; however in this case the very numerous oscillating movements result in rapid wear of the seals, and consequently leakages of oil which, in their turn, will result in a reduction in the permanent pressure in the apparatus and the appearance of cavitation phenomena.

This drawback is particularly troublesome in the railway field, since the mileage travelled by a vehicle between two major maintenance operations is generally considerable, so that effective active life of the shock absorbers is often well below the time between two successive adjustments.

Sealing devices formed by a diaphragm seal which grips the piston rod are also known, but the elasticity and the motion of this type of seal are distinctly insufficient to avoid its slippage with respect to the piston rod, as well as premature wear.

SUMMARY OF THE INVENTION

The present invention is intended to overcome such drawbacks, and it applies therefore to an hydraulic

dissipator of energy of a moving mass, of the telescopic type, comprising:

(1) a working cylinder filled with liquid and divided into two chambers by a piston provided with calibrated valves determining the hydraulic resistance, and of which the rod connected to the moving mass is guided through one of the ends of the cylinder,

(2) an auxiliary annular compensating chamber surrounding the working cylinder, communicating through a valve and a calibrated valve with the working chamber opposite the rod of the piston, and

(3) a sealing device for the exit of the piston rod, arranged in a housing extending the working cylinder on the rod side.

According to the invention, the sealing device is formed by a seal comprising a cylindrical ring which grips the rod of the piston and which is extended by a fluid-tight bellows, coaxial with said rod, permitting axial movement of the seal in its housing, following the low amplitude movements of said rod.

BRIEF DESCRIPTION OF THE DRAWINGS

The invention will be better understood by means of the following description referring to particular embodiments given by way of example and referring to the accompanying drawings in which

FIG. 1 is an axial section view of an hydraulic dissipator of energy provided with the sealing device according to the invention.

FIG. 2 is a partial axial section view of a second embodiment of the invention.

FIG. 3 is a partial axial view of a third embodiment of the invention.

DETAILED DESCRIPTION OF PREFERRED EMBODIMENTS

Referring first to FIG. 1, the energy dissipator comprises a working cylinder 1, surrounded by coaxial tube 2, forming with it an annular chamber 3. The working cylinder 1 is closed by a lower end 5 and by an upper 6 end constituting the counter-piston. A piston 9, sliding inside the working cylinder 1 and fixed to a rod 10, comprises two inverted and calibrated valves 11. This piston 9 divides the working cylinder 1 into two chambers 12 and 13.

The rod 10 passes through the counter-piston 6 through an orifice which constitutes a simple guide, with very limited play, but without being fluid-tight. A plug 14, held on the counter-piston 6 by a nut 4 screwed into the upper part of the tube 2, forms with said counter-piston a housing 15 for the mounting of a sealing device applied to the piston rod. This rod 10 is provided, at its outer end, with a coupling 16 and a protecting box 17. The lower end of the working cylinder 1 comprises a valve 18 opening wide passages to the liquid from the annular chamber 3 through the working chamber 12 on the aspiration of piston 9 and through a valve 19 which inversely opens a restricted passage to the annular chamber 3.

Tube 2 is hermetically closed by cup 20 bearing the lower coupling 21.

In the housing 15 is mounted a fluid-tight seal formed by a cylindrical ring 23 which by friction adheres fairly firmly to the rod 10 and which is extended by a fluid-tight bellows 24, of the which last fold is fixed by a washer 25 on its seat provided in the counter-piston 6. The inside of the bellows 24 communicates freely through wide apertures with the annular chamber 3.

The upper surface of the cylindrical ring 23 is slightly bulged to avoid a suction effect between this ring and the plug 14. It is also possible to roughen this upper surface, again to avoid the suction effect.

On the other hand, on the side face of the cylindrical ring 23 is mounted a gripping ring 26 in order to prevent the swelling of the seal under the effect of temperature. This gripping ring can optionally be molded directly in the ring of the seal.

During the movements of the rod 10, the cylindrical ring 23 of the seal 22, which by friction adheres fairly firmly to the rod 10, first follows the latter without slippage by drawing the bellows 24 until it comes possibly to abut the bottom of the plug 14 in the case of an extension movement exceeding a certain amplitude. Only then, if the movement continues further, the ring 23 starts to slide on the rod 10. In the opposite direction, in the case of a compressive movement, the ring 23 of the seal is driven downwards by friction. The fluid-tight bellows 24 hence permits greater movement than with customary seals of the diaphragm type.

In the case of oscillations of small amplitudes, which represent by far the large majority of movements, the ring 23 of the seal 22 remains stuck to the rod 10, following its motion without sliding. Since the wear of the seal is caused solely by sliding, there will hence be no wear in this case. Thus, the seal will wear only upon movements of the greatest amplitudes, which are very infrequent, and there will therefore have an exceptionally long life. Another advantage of the dissipator according to the invention is the elimination of vibrations and tremors customarily transmitted to the suspended portion because of the friction of the seal during small oscillations. On oscillations of greater amplitude, the relative value of the frictional forces with respect to the hydraulic reaction, which moreover is gradually initiated, becomes negligible, whence great gentleness of operation in all cases.

In the embodiment of the dissipator according to FIG. 2, the ring 23 of the seal 22 is oriented downwards and the last fold of the bellows 24 is fixed in fluid-tight manner to the upper portion of the housing 15 on the plug 14 by a support washer 30. The active surface of the seal is hence oriented towards the inside and communicates through very wide passages with the annular chamber 3, of which the low pressure, whether of air or of liquid, is exerted outside the seal 22, and tends, consequently, to grip it against the rod 10, which can sometimes offer an advantage of still longer service, particularly in the case of relatively greater oscillations.

In FIG. 3, the fluid-tight seal 22 is composed also of a cylindrical ring 23 crimped at the upper portion of a metal bellows 31 of which the last fold is fixed to the counter-piston 6 by the nut 4 by means of a fluid-tight seal 32 and a washer 33.

To ensure in all cases the possibility of axial movement of the seal without sliding on the piston rod, it would be possible also to provide helicoidal-shaped bellows, reinforced or not with spring-forming metal wires, or again provided with end pieces of elastic tubing enabling the axial deformations.

I claim:

1. Sealing device for an hydraulic energy dissipator of the telescopic type, comprising

(a) a working cylinder filled with liquid and divided into two chambers by an axially moving piston provided with calibrated valves determining the hydraulic resistance, a piston rod of said piston being guided through a first end of said cylinder;

(b) an annular compensating chamber surrounding said working cylinder and communicating through a valve and a calibrated valve with said working chamber adjacent the end of said cylinder remote from said piston rod;

(c) a fluid-tight seal for the exit of said piston arranged in a housing extending said working cylinder on the rod side, said fluid-tight seal being formed from a cylindrical ring which grips said piston rod and which is extended by a fluid-tight bellows, coaxial with said rod, enabling axial movement of said seal in said housing.

2. Sealing device according to claim 1, wherein said cylindrical ring has a slightly convex upper surface.

3. Sealing device according to claim 1, wherein said cylindrical ring has an upper surface which comprises roughnesses in relief.

4. Sealing device according to claim 1, comprising a gripping ring mounted on a lateral surface of said cylindrical ring.

5. Sealing device according to claim 4, wherein said gripping ring is directly molded in said cylindrical ring.

6. Sealing device according to claim 1, wherein the last fold of the bellows is fixed in sealed manner to one or other of the end surfaces of the housing.

7. Sealing device according to claim 1, wherein the fluid-tight bellows is a metal bellows at the upper portion of which is crimped the cylindrical ring of the fluid-tight seal.

8. Sealing device according to claim 1, wherein the fluid-tight bellows is a bellows of helicoidal shape.

* * * * *

United States Patent [19]

Houseman et al.

[11] **Patent Number: 4,570,943**

[45] **Date of Patent: Feb. 18, 1986**

[54] **SEALING FLASHING FOR BUILDINGS WITH INTERLOCKING RING MEMBERS**

[75] Inventors: **David G. Houseman**, Richmond; **Gary J. Binding**, Boronia, both of Australia

[73] Assignee: **John Deks Australia Pty. Ltd**, Bayswater, Australia

[21] Appl. No.: 706,329

[22] Filed: Feb. 27, 1985

[30] **Foreign Application Priority Data**

Feb. 29, 1984 [AU] Australia PG3848

[51] Int. Cl.[4] F16J 15/02; F16L 41/06; E04D 13/14

[52] U.S. Cl. ..... 277/12; 277/212 FB; 52/60; 285/43

[58] Field of Search ..... 277/1, 9, 12, 32, 212 FB; 52/60; 285/3, 4, 42–44

[56] **References Cited**

U.S. PATENT DOCUMENTS

1,282,535	10/1918	Bropson	285/44
3,602,530	8/1971	Elwart	285/4
3,977,137	8/1976	Patry	52/60
4,160,347	7/1979	Logadon	277/12 X
4,211,423	7/1980	Reach	277/12 X
4,333,660	6/1982	Cupit	52/60 X

FOREIGN PATENT DOCUMENTS

12186/28	of 1928	Australia	285/43
1233102	5/1960	France	277/212 FB

Primary Examiner—Robert S. Ward

Attorney, Agent, or Firm—Bucknam and Archer

[57] **ABSTRACT**

A flashing device for use on a building roof to seal about a pipe passing therethrough, comprising a sleeve of rubber or the like through which the pipe may pass with the upper end of the sleeve in sealing contact with the periphery of the pipe. A pair of rigid ring members are provided at the lower end of the sleeve, with a portion of the sleeve located between the ring members. The ring members being adapted to interlock together to compress the portion of the sleeve therebetween into sealing relation with a sheet material also located between the ring members.

13 Claims, 4 Drawing Figures

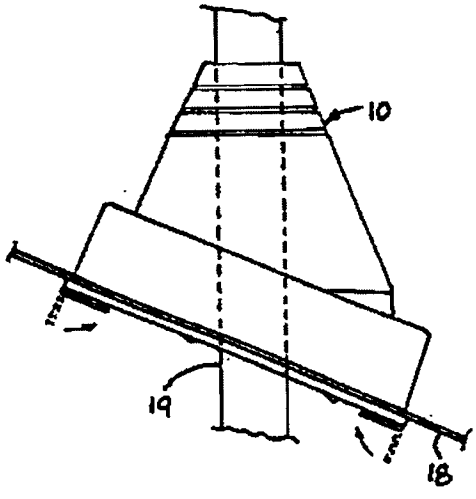

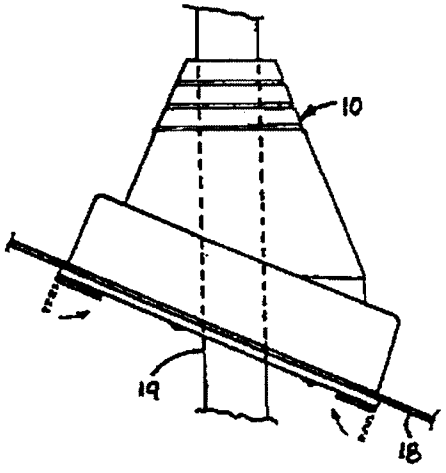

FIG. 1.

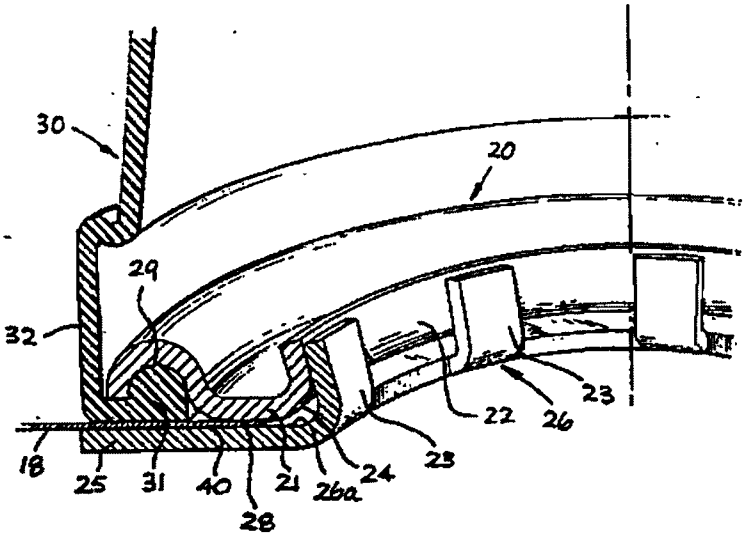

FIG. 4

FIG. 3.

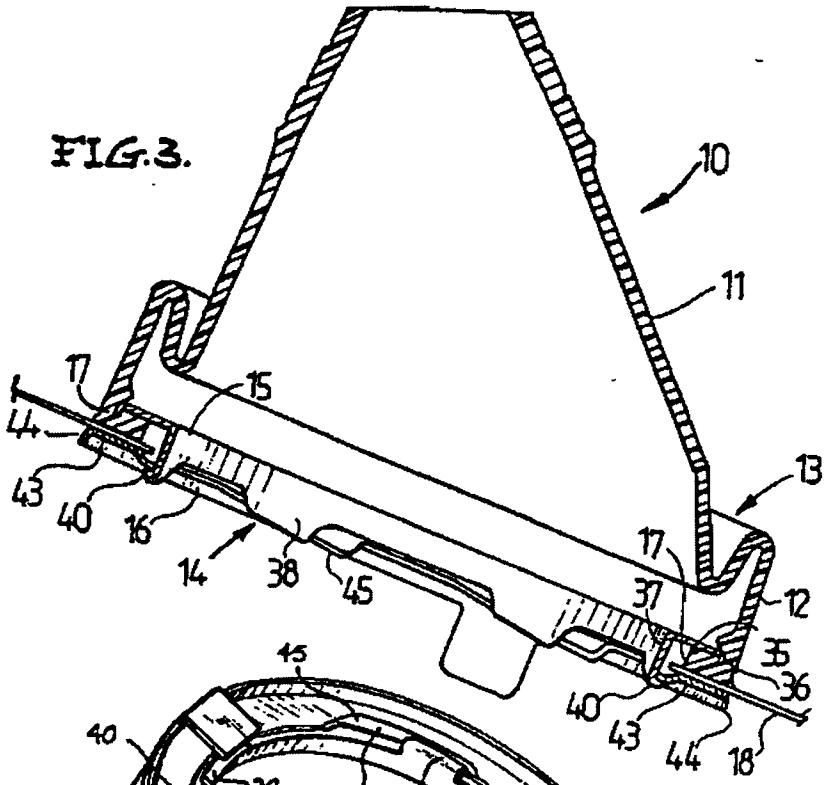
10
11
13
12
17
15
44
43
40
16
14
38
45
37
35
36
18

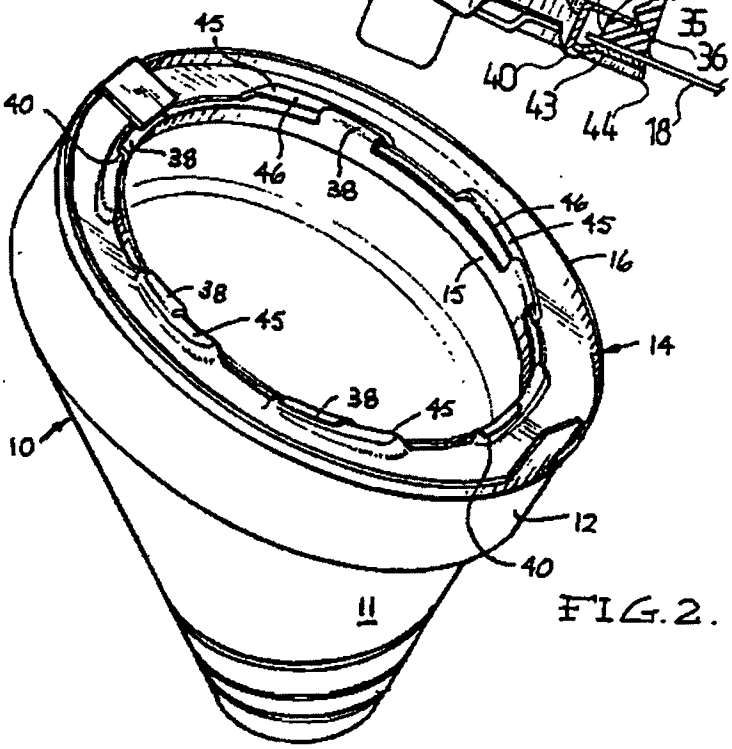
45
40
38
46
16
15
14
10
12
11

FIG. 2.

SEALING FLASHING FOR BUILDINGS WITH INTERLOCKING RING MEMBERS

This invention relates to flashing devices as used to produce a weather-tight seal between a pipe conduit or other member which extends through the roof or wall of a building or like structure.

In the building industry there have been several constructions available for providing a seal around a pipe or other member extending through a roof or a building, but in the majority of cases these constructions required a considerable amount of fabrication on the site, and individual fitting to suit each installation. These prior constructions are satisfactory when constructed and fitted with the necessary degree of skill, but in recent times, with the general reduction in the availability of skilled labour, and the high costs of same, there is a need for a flashing construction which can be fitted by unskilled persons and which ensures an effective seal is established.

In U.S. Pat. No. 4,333,660 there is proposed a flashing or sealing device having a sleeve of resilient material with an integral outwardly extending flange at one end. An annular member of non-resilient flexible material is bonded to the flange to extend about the sleeve. In use a pipe or other conduit may extend through the sleeve, with the end of the sleeve remote from the flange stretched so as to sealably engage the external surface of the pipe. The flange and annular member bonded thereto are manually worked to closely fit the contour of a roof sheet through which the pipe extends, and is secured thereto by rivets or screws. The flange if resilient material is thus compressed between the roof sheet and the annular member to establish an effective seal with the roof sheet.

This flashing device is particularly suitable for use on metal roofs, where it is convenient to secure the flange by rivets or screws, but presents problems with other roof materials such as slates or tiles. Firstly it is difficult to make an accurately shaped hole for the passage of the pipe through such a roof. In order to deal with this problem the flange of a flashing device as above discussed would have to be large with resultant cost increases and transport and storage disadvantages. Secondly, as the flange is attached by screws and rivits there is the added problem of drilling tiles or slates and the high risk of damage or breakage of the tile or slate.

It is thus the principle object of the present invention to provide an improved flashing device whhich is simple to install, effective in operation, and may be used in sealing about pipes or conduits projecting through tile or slate roofs.

There is accordingly provided by the present invention a device for flashing about a pipe or conduit passing through a roof or wall;

a first member having an aperture therethrough for a pipe or conduit to pass through and a continuous first abutment surface extending about said aperture, a second member having an aperture therethrough for the pipe or conduit to pass through and a continuous second abutment surface extending about said aperture, said apertures and abutment surfaces being arranged so that when the first and second members are assembled to a pipe or conduit that extends through the respective apertures, the first and second abutment surface are in an opposing face to face substantially parallel relation substantially transverse to the axis of the pipe or conduit, means to secure the first and second members together in said assembled relation with a sheet of flexible material therebetween and through which the pipe or conduit also extends and a sleeve of flexible resilient material adapted at one end for attachment to the first member so that a pipe or conduit extending through the first and second members also extends through the sleeve, the other end of the sleeve being adapted to sealably engage the external surface of the pipe or conduit extending therethrough, said one end of the sleeve including a portion located in use to be compressed between the sheet and one of the members when the first and second members are secured together in said assembled relation.

Preferably the sleeve is provided with a bead portion that is received in a bead groove provided in the first member. Alternatively the perimetal edge of the first member is received in a recess or cavity formed in the internal surface of the bead.

Conveniently the first and second members are provided with inter-lockable elements to engage when the members are assembled, and to maintain the members in pressure engagement with the sheet. The lockable elements preferably engage in a snap action achieved by pressing the members together in a generally axial direction. Alternatively the inter-lockable elements may comprise a series of tongues on one member and slots in the other arranged so that the tongues extend through the slots, on assembly of the members, and the tongues are then deformed, twisted or otherwise manipulated to prevent their withdrawal from the slots.

Preferably the bead is located inwardly of the wall of the sleeve, at the one end thereof, and directed toward the other end of the sleeve. When the sleeve and first member are assembled the sleeve extends about the outer marginal portion of the first member, with the bead seated in a downward directed bead groove formed in the under surface of the first member. Preferably the one end of the sleeve is in a stretched condition to receive the first member and so the first member and the sleeve once assembled will normally remain so.

The bead and the bead groove are dimensions so that when the first and second members are assembled together, with the sheet material therebetween, the bead will be compressed between sheet material and the first member to form a moisture and weather seal. Preferably the first and second members engage opposite sides of the sheet material, and clamp same therebetween when the bead is in the compressed state.

In use the first and second members are assembled to the pipe or conduit on opposite sides of a sheet of flexible material, having an aperture therethrough for the passage of the pipe or conduit.

It is to be understood that the two members may be assembled to the sheet of flexible material prior to inserting the pipe or conduit through the respective apertures in the members, or in-situ on the pipe or conduit. Thus the two members and the sheet may be marketed as a combination either in an assembled or unassembled state.

The first and second members may be adapted to provide a closed cavity therebetween when assembled together, so the cavity may be filled with a flowable sealant compound. An aperture or port may be provided communicating with the cavity so that the sealant may be forced into the cavity direct from a sealant container or pressure sealant applicator.

The sleeve of flexible resilient material preferably tapers over at least part of its length. This form of sleeve may be used to fit a range of sizes of pipes or conduits by cutting the sleeve off at the appropriate location along the length of the tapered portion to provide an opening at the end of the sleeve that will sealably fit the particular size pipe or conduit. Suitable markings, such as annular grooves or ridges, may be provided on the surface of the tapered portion of the sleeve, to indicate the location at which to cut the sleeve for various sizes of pipe or conduit. The use of ridges has the additional advantage that it strengthens the edge of the sleeve against tearing then the sleeve is cut.

The provision of the resilient sleeve as above described enables the same first and second members to be used on a range of sizes of pipes or conduits.

The use of the sleeve of resilient material also has the advantage that misalignment of the pipe or conduit with the apertures in the first and second member may be accommodated by deflection of the sleeve. Due to the flexible resilient nature of the sleeve, any deflection thereof will not adversely affect the seal between the sleeve and the pipe or the first member.

The resilient sleeve may be arranged substantially co-axial with the apertures in the first and second member, or with its axis inclined thereto. As the surface of most roofs are inclined to the axis of any pipe or conduit extending therethrough at an angle that may range from 15° to 45° it may be preferable to have the axis of the sleeve inclined such as at 30°. The flexability of the sleeve will accommodate any difference between the inclination of the roof and the pipe or conduit.

The present invention will be more readily understood from the following description of one practical arrangement of the flashing device as illustrated in the accompanying drawings.

In the drawings;

FIG. 1 is an illustrative side view of the flashing device fitted to a pipe extending through a roof;

FIG. 2 is a perspective view from the under side of the flashing device;

FIG. 3 is a diametral section view of the flashing device; and

FIG. 4 is a perspective sectional view of part of an alternative construction of the attachment ring assembly for the flashing device.

Referring now to FIGS. 1, 2 and 3 of the drawings the flashing device comprises a sleeve member 10, made of a suitable flexible resilient material such as a natural or synthetic rubber, having a main tubular section 11 and an apron 12 interconnected by a re-entrant fold portion 13. The attachment ring assembly 14 comprises inner and outer ring members 15 and 16, carrying interlocking components which will be described in greater detail hereinafter. The inner ring member 15 is located substantially within the apron 12 of the sleeve member, with the sealing ring portion 17, integral with the apron, located between the peripheral portions of the inner and outer rings 15 and 16.

In use the sleeve member 10 is secured by the ring assembly 14 to a sheet 18 of flexible non-resilient material, such as light gauge metal, so that a pipe or like conduit 19 may pass through an opening in the sheet 18 and through the sleeve member 10, with the latter providing a seal between the pipe 19 and the sheet 18. The sheet of flexible non-resilient material 18 is fitted to a roof structure in the conventional manner which will be described in further detail hereinafter.

The inner ring member 15 has a generally annular portion 35, having a short axially extending lip 36 on the outer periphery and a longer axially extending flange or skirt 37 on the inner periphery. The lip 36 and skirt 37 provide stiffening to the annular portion 35, so that it will remain substantially flat under the clamping pressures generated by the assembly of the inner and outer ring members 15 and 16 as hereinafter described. The inner flange 37 has spaced around its lower edge a plurality of tongues 38, which terminate in outwardly directed lips 40. Each of the lips are located in a respective plane, with each plane inclined equally to the plane of the annular portion 35 of the inner ring member 15.

The outer ring member 16 is of generally annular shape having a flat portion 43 which, in use, is disposed parallel to the annular portion 35 of the inner ring member 15. The flat portion 43 of the outer ring member 16 has a continuous lip 44 about the outer peripheral edge thereof, and a plurality of ramp elements 45 spaced around the inner peripheral edge. The lip 44 and the ramps 45 provide stiffening to the flat portion 43 of the lower ring member 16 so that it will remain substantially flat when subject to clamping pressures.

The ramps 45 have lower inclined surfaces 46 each located in a respective plane inclined to the plane of the flat portion 43, substantially equal to the inclination of the lips 40 to the plane of the annular portion 35. The portions of the inner periphery of the outer ring member 16, intermediate the ramps 45, are cut out to permit the tongues 38 of the inner ring member 15 to pass through the central opening of the outer ring member 16. The surfaces 46 of the ramps 45 extend radially inward to an extent to underlie the lips 40 on the tongues 45. Thus, in use, the outer ring member 16 may be assembled to the inner ring member 15, whilst the latter is attached to the sleeve member 10, by locating the tongues 45 in general axial alignment with the spacers between the ramps 45, and subsequent rotating the outer ring member 16 relative to the inner ring member 15, to bring the lips 40 of the tongue 38 into engagement with the inclined surfaces 45 of the ramps 45. This rotation is in an anticlockwise direction as seen in FIG. 3 and will cause the lip 40 of the respective tongue 38 to ride up the inclined surface 46 of the cooperating ramp 45, so as to draw the annular portions 35 and 43 respectively towards each other in an axial direction as viewed in FIG. 3. The appropriate dimensioning of the inner and outer ring members 15 and 16, relative to the dimensions of the sealing ring portion 17 of the sleeve member 10 and the thickness of the sheet 18, enables the relative rotation between the inner and outer ring members to compress the sealing ring 17 into pressure sealing engagement with the surface of the sheet 18.

The angle of the inclined face 46 of the ramp 45 is chosen so that the relative rotation between the inner and outer ring members 15 and 16 can be effected manually to derive the necessary sealing pressure between the sealing ring and the plate 18. Conveniently the angle of the ramp is in the order of 5° to 10°, which will permit manual operation during assembly, and also preclude any likelihood of the ring members rotating in the reverse direction to release the compression pressure, under the forces which will exist in the clamping arrangement once it has been assembled.

The outer ring member 16 is provided with a pair of axially projecting lugs 50 to assist in rotation of the member 16 during assembly as previously described. After assembly the lugs 50 may be bent to overlay the

ramps 45 rearward of the lips 40 and so prevent rotation of in the direction to release the sealing pressure. One of the lugs is shown in this position in FIG. 3.

The flexible non-resilient sheet 18 to which the flashing device is fitted may conveniently be of lead, aluminum, copper or other material which will not be subject to corrosion under normal atmospheric conditions, and may include galvanised or other suitably coated steel sheet. The sheet is normally cut to a rectangular shape of sufficient dimensions so that when assembled to a tile or slate roof, the top edge portion of the sheet may be inserted between the overlapping edges of the tiles above the location of the flashing device, whilst the lower edge may be deformed to follow the contour of and overlap the junction of thr row of tiles below the flashing device. The manner in which the sheet 18 is fitted to a tile or slate roof is a conventional procedure, and the advantage of the present invention is the provision of the flashing device which provides the effective seal between the sheet 18 and the pipe 19 extending through the roof.

FIG. 4 of the drawings shows portion of an alternative construction of the ring assembly 14 whereby it is assembled in a snap action to compress portion of the sleeve member into a sealing engagement with the sheet.

Referring now to FIG. 4 the inner ring member 20 comprising a flat annular portion 21 with a skirt portion 22 projecting generally axially from the inner periphery of the annular portion. The skirt portion is inclined upwardly and outwardly with respect to the axis of the annular portion. The junction of the skirt portion 22 and flat annular portion 21 presents a downwardly directed convex or arcuate surface 24 that blends smoothly with each said portion.

The outer ring member 26 is in the form of flat annulus with a plurality of upwardly and outwardly directed fingers 23 about the inner peripheral edge thereof. The fingers 23 are dimensioned to enter the central opening defined by the skirt portion 22 of the inner ring member 20, and to engage the skirt portion 22 in a snap action to hold the inner and outer ring members in assembly. The convex surface 24 of the inner ring member assists in promoting the resilient deflection of the fingers 23 to establish the snap action engagement of the fingers with the skirt portion 22.

The downwardly directed annular bead grooves 29 provided in the first ring member 20, outwardly of the annular portion 21, is of generally semi-circular cross-section and located upwardly of the lower surface 28 of the annular portion 21. The sleeve member 30 is generally of the same construction as shown in FIG. 2 and has at the lower end a bead 31 which extends inwardly and upwardly with respect ot the apron portion 32 of the sleeve member. The bead 31 is continuous about the lower end of the sleeve member and is received in the bead groove 29 of the inner ring member. Preferably the diameter of the apron 32 at the lower end is selected so that it must be stretched to receive the inner ring member 20 so they will normally remain in assembly.

The bead 31 and bead groove 29 are dimensioned so that, when the inner ring member 20, with the sleeve member assembled thereto, is assembled to the sheet 18, and the outer ring member 26 is assembled to the inner ring member, the bead 31 will be compressed between the sheet and the inner ring member to form a seal therebetween. Preferably when so assembled the sheet 18 is also clamped between the annular portion 21 of the inner ring member and the flat annular portion 26a of the outer ring member.

As the principle use for the flashing device is sealing about pipes that project through the roof of a building, and as such roofs are usually inclined to the axis of the pipe, the axis of the apron 12,32 is inclined to the axis of the tubular portion 11 of the sleeve member 10,30.

The pitch or inclination of a building roof may vary with the design of the building and the roofing material used. Normally the angle of the roof is between 15° to 35° to the horizontal. Accordingly the angle between the surface of the roof and the axes of a vertical pipe passing therethrough is 75° to 55°.

Provided the diameter of the central opening in the inner and outer ring members is sufficient, relative to the diameter of the pipe passing therethrough, a range of roof inclinations can be accommodated by the same flashing device.

The sleeve member 10 is formed from a flexible resilient material, such as rubber or a thermoplastic material, selected so that it will retain its resilient properties in the environment to which it is intended to be subjected in use. As the major application for the flashing device will result in the sleeve member being positioned on vents or conduits extending the roof or external wall of a building, it will be exposed to a range of climatic conditions, including strong sunlight, a resilient material, particularly suitable for use in such conditions are ethylene propylene diene monomers and ethylene propylene terpolymer.

The fold portion 13 and apron 12 provide a substantial degree of flexibility between the attachment assembly 14 and the tubular member 10 to accommodate misalignment between the various components, and if required a greater degree of flexibility can be obtained by using a multiple fold or pleat construction.

As the flashing device is intended to cover a range of pipe or conduit sizes, the opening 9 at the upper end of the tubular section is of a size to receive in sealing engagement the smallest size conduit intended to be used. The upper end portion 8 of the tubular member is provided with concentric grooves 7 which correspond to the size of aperture required to accommodate three further sizes of conduits. A workman may enlarge the size of the opening 9 by cutting along either one of the grooves to suit the particular size conduit. Larger sizes of conduit may be accommodated by cutting around the periphery of the tubular portion 10 at appropriate locations.

The claims defining the invention are as follows:

We claim:

1. A device for flashing about a pipe or conduit passing through a roof or wall,

a first member having an aperture therethrough for a pipe or conduit to pass through and a continuous first abutment surface extending about said aperture, a second member having an aperture therethrough for the pipe or conduit to pass through and a continuous second abutment surface extending about said aperture, said apertures and abutment surfaces being arranged so that when the first and second members are assembled to a pipe or conduit that extends through the respective apertures, the first and second abutment surfaces are in an opposing face to face substantially parallel relation substantially transverse to the axis of the pipe or conduit, means to secure the first and second members together in said assembled relation with a sheet of

flexible material therebetween and through which the pipe or conduit also extends and a sleeve of flexible resilient material adapted at one end for attachment to the first member so that a pipe or conduit extending through the first and second members also extends through the sleeve, the other end of the sleeve being adapted to sealably engage the external surface of the pipe or conduit extending therethrough, said one end of the sleeve including a portion located in use to be compressed between the sheet and one of the members when the first and second members are secured together in said assembled relation.

2. A device as claimed in claim 1 wherein said one end of the sleeve is adapted to be attached to the first member so that in use said portion of the sleeve is located between the abutment surfaces of the first and second members.

3. A device as claimed in claim 2 wherein the portion of the sleeve is an annular bead seated in an annular bead groove formed in the first member substantially co-axially with the aperture in the first member.

4. A device as claimed in claim 2 wherein the perimetal edge of the first member is received in a recess in the internal surface of sleeve.

5. A device as claimed in claim 3 wherein the perimetal edge of the first member is received in a recess in the bead portion of the sleeve.

6. A device as claimed in claim 1, wherein the first and second member carry interlockable elements adpated to co-operate where the first and second members are assembled with said portion of the sleeve compressed between one of the members and sheet to maintain the members in assembly and said portion of the sleeve compressed.

7. A device as claimed in claim 6 wherein the interlockable elements co-operate in a snap-action to secure the first and second members in assembly.

8. A device as claimed in claim 6 wherein each of the members is of annular form with the inner periphery of each having a shirt extending generally in the axial direction, each of said skirts being inclined outwardly and adapted so that when the members are in the assembled position the two skirts interlock in a snap action to occupy a nesting relation.

9. A device as claimed in claim 8 wherein the skirt on one member is substantially continuous in the circumferential direction and the skirt on the other member is a series of circumferentially spaced segments.

10. A device as claimed in claim 1 wherein the first member has a continuous annular portion adapted for location within said one end of the sleeve with a sealing ring integral with the sleeve underlying the annular portion, and a continuous skirt at the inner periphery of the annular portion to in use project axially inward of the sleeve and incline radially outward with respect to the axis of the first member, and wherein the second member has an annular portion adapted in use to underlie the annular portion of the first member with the sealing ring therebetween, a plurality of fingers spaced along the inner periphery of the annular portion of the second member and integral therewith, said fingers being adapted to engage in a snap action the inner peripheral surface of the skirt of the first member when assembled thereto, and when so engaged to hold the sheet in sealing engagement against the sealing ring.

11. A device as claimed in claim 1 wherein the means to secure the first and second members together comprise a plurality of ramps formed on the first members spaced about the inner periphery thereof, and a plurality of complement tongues on the second member, said ramps and tongues being arranged to co-operatively engaged by initially inserting the tongues through the central aperture of the first member and thereafter effecting relative angular movement between the two members to move the tongues upwardly along the ramps.

12. A device as claimed in claim 11 wherein the second member is in use located substantially within said one end of the sleeve with said portion of sleeve underlying the second member.

13. A device as claimed in claim 10, wherein an outer peripheral portion of the first member is frictionally gripped by the sleeve to normally hold the sleeve and first member in assembly.

* * * * *

United States Patent [19]

Tupman

[11] **Patent Number: 4,574,548**

[45] **Date of Patent: Mar. 11, 1986**

[54] COLUMN REGLET

[75] Inventor: Thomas G. Tupman, Newport Beach, Calif.

[73] Assignee: Fry Reglet Corporation, Alhambra, Calif.

[21] Appl. No.: 580,380

[22] Filed: Feb. 15, 1984

[51] Int. Cl.[4] E04B 1/00; E04F 13/06

[52] U.S. Cl. 52/255; 52/262; 52/283; 52/371; 52/716

[58] Field of Search 52/220, 221, 371, 283, 52/288, 255, 219, 58, 716; 285/42, 192

[56] References Cited

U.S. PATENT DOCUMENTS

1,399,748	12/1921	Cheney	285/42 X
2,389,171	11/1945	Urbain	52/283
2,711,127	6/1955	O'Day	52/371 X
3,159,251	11/1964	Becker	52/283
3,486,283	12/1969	Arnett	52/255
3,606,714	9/1971	Arnett	52/255
4,211,423	7/1980	Reseoh	285/42 X
4,237,667	12/1980	Pallacci et al.	285/192 X

FOREIGN PATENT DOCUMENTS

1287555	2/1962	France	52/58
120312	9/1981	Japan	52/221

Primary Examiner—Alfred C. Perham
Attorney, Agent, or Firm—Fred Flam

[57] ABSTRACT

A two part molding structure provides a quirk or reveal about a cylindrical column, one part being a spacer ring of flexible material, and the other part being an extruded metal grounding member of simple cross sectional configuration whereby it can be preformed or bent in situ to surround the spacer ring and form therewith the channel or reveal. The grounding member either provides a channel upon which ceiling tile can rest, or an edge against which moldable material, such as plaster, can be applied.

8 Claims, 4 Drawing Figures

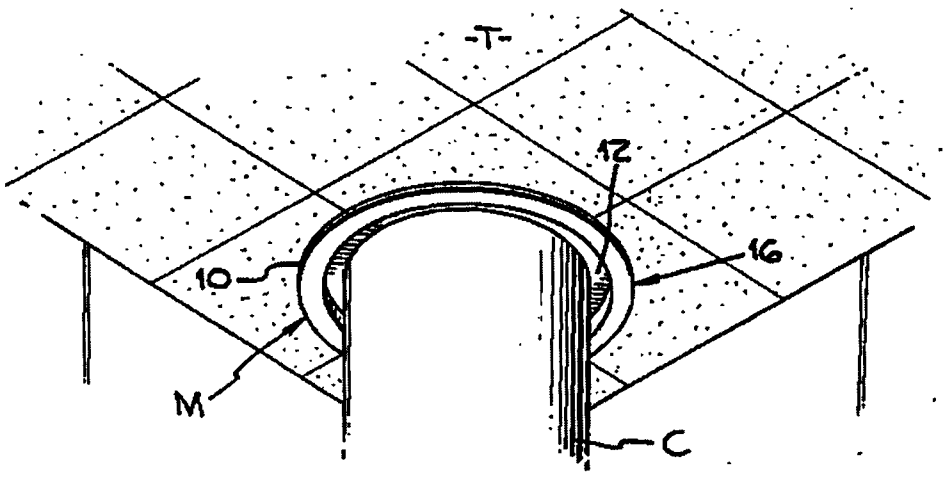

Fig. 1.

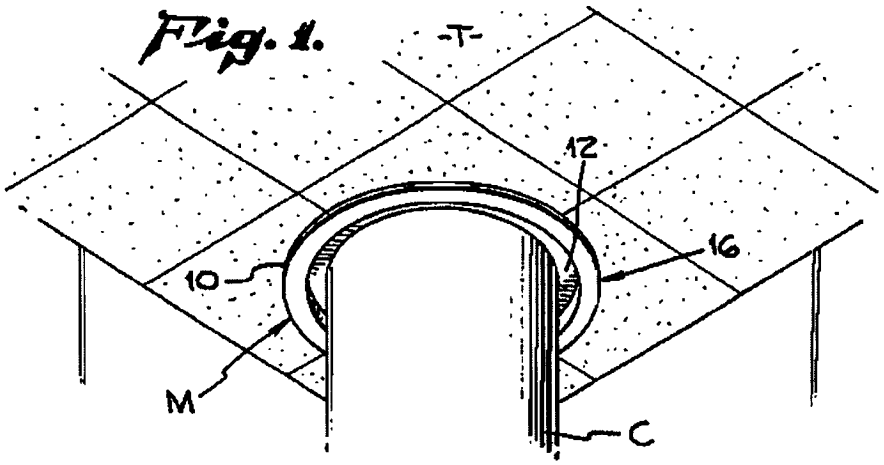

Fig. 2.

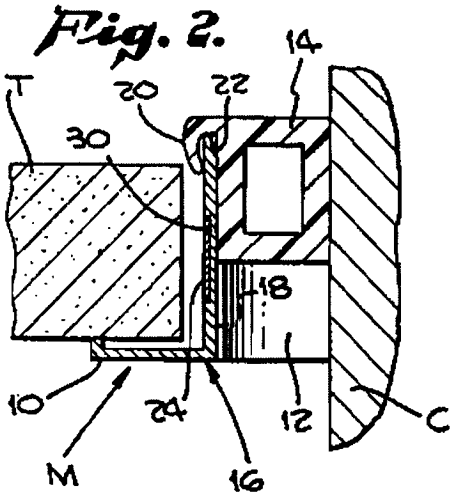

Fig. 4.

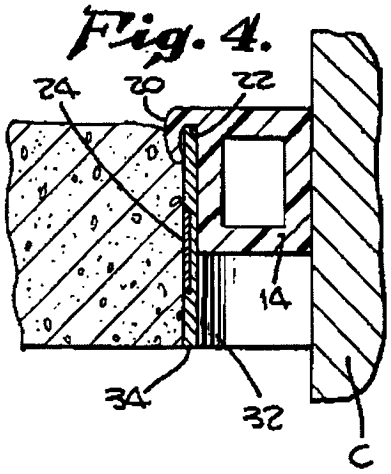

Fig. 3.

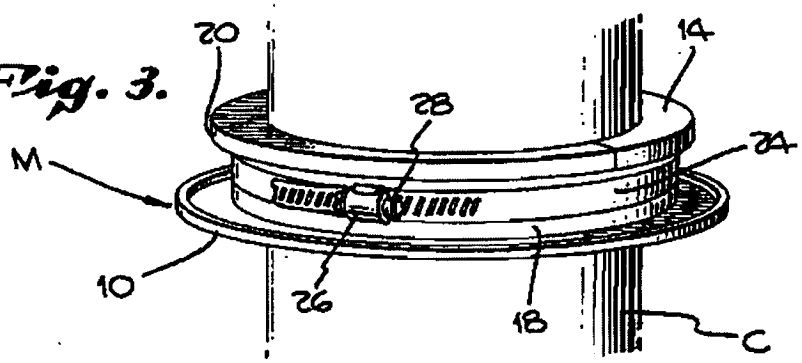

COLUMN REGLET

FIELD OF INVENTION

This invention relates to moldings for providing a neat junction between two architectural elements, and more particularly to a reveal moldings for use between cylindrical columns and ceiling plaster or tile.

BACKGROUND

Various metal molding strips that provide a reveal are shown and described, for example, in U.S. Pat. Nos. 3,606,714 and 3,486,283 to Robert W. Arnett, respectively entitled MOLDING STRIP FOR USE AS QUIRK OR REVEAL and SOFFIT MOLDING. Some of the shapes can be rolled into a curved configuration to conform to building structures having relative large radii of curvature. For example, the "F" molding shown in the U.S. Pat. No. 3,606,714 can successfully be rolled to curve about an axis parallel the the stem of the "F" providing the radius of curvature is fairly large. The bars of the "F" are short enough to accommodate some elongation.

To provide a downwardly opening reveal about a cylindrical column for cooperation with ceiling tile, a wide "W" section molding seems appropriate, one of the flanges of the "W" section lying against the column and attached thereto and the other of the flanges radiating outwardly from the column for supporting ceiling tile, the intermediate offset of the "W" providing the required reveal. Roll forming a section such as this with a small radius of curvature has not been successfully achieved. Even a simpler "Z" shaped section to provide a plaster ground cannot economically be curved to fit a column.

For lack of an adequate molding, there exist otherwise well designed buildings with crudely hand cut tiles fitted about a cylindrical column or with plaster badly joined thereto. It has been proposed to cut V-shaped notches in the sections of the metal preparatory to bending. This, however, is tedious, expensive, and at best a compromise. There has accordingly been a demand by architects and builders for an economical molding for use about cylindrical columns for neat juncture of ceiling tile or plaster.

SUMMARY OF INVENTION

The primary object of the present invention is to provide a simple and inexpensive reveal molding for use about a column of small radius of curvature. In order to achieve this objective, I provide a composite or two part molding. One part comprises a plastic spacer easily wrapped about the column; the other part comprises an extruded strip of simple configuration easily flexed or roll formed to assume the high degree of curvature corresponding to that of the column. The parts interfit. Together they are secured to the column by a band clamp. The requisite configuration for reveal is provided.

BRIEF DESCRIPTION OF THE DRAWINGS

A detailed description of the invention will be made with reference to the accompanying drawings wherein like numerals designate corresponding parts in the several figures. These drawings are to scale.

FIG. 1 is a perspective view from below of an architecturally completed column and ceiling utilizing a molding incorporating the present invention.

FIG. 2 is an enlarged transverse sectional view of the molding taking along a plane corresponding to the line 2—2 of FIG. 1.

FIG. 3 is a perspective view of the molding structure in the process of being clamped to the column prior to installation of ceiling tile.

FIG. 4 is a sectional view similar to FIG. 2, showing another form of the present invention.

DETAILED DESCRIPTION OF THE PREFERRED EMBODIMENT

The following detailed description is of the best presently contemplated mode of carrying out the invention. This description is not to be taken in a limiting sense, but is made merely for purposes of illustrating the general principles of the invention, the scope of the invention being defined by the appended claims.

Structural and operational characteristics attributed to forms of the invention first described shall also be attributed to forms later described, unless such characteristics are obviously inapplicable or unless specific exceptions are made.

In FIG. 1 there is illustrated a cylindrical column C that may be structural or decorative and that may be made of any material, such as concrete, steel or laminated wood. The column C projects upwardly beyond a ceiling structure. In the present example, the ceiling structure comprises acoustic tile T. The juncture between the tile T and the column C is neatly defined by a molding M that includes a flange 10 extending radially outwardly of a downwardly opening channel 12.

The crudely cut edges of the tile T are concealed by the flange 10 whereby a neat juncture can expeditiously be provided by ceiling tile workers. The bottom or upper end of the channel 12 is part of the molding M itself. This channel closely encircles the column C.

The molding, as more clearly shown in FIG. 2 comprises two main parts, a spacer ring 14 and a grounding member 16. The spacer ring 14 encircles the column C and partially defines the channel or reveal 12. The grounding member 16 is a strip of "L" shaped cross-sectional configuration, with its base or stem 18 surrounding and engaging the outer surface of the spacer ring 14. The stem 18 of the grounding member 16 projects below the spacer ring to define the outer wall of the channel or reveal 12. From the lower end of the stem 18, the flange 10 projects radially outwardly to form a ledge upon which the edges of the tiles T rest.

The grounding member is made of resilient extruded aluminum or other suitable material. Its simple "L" configuration allows it easily to be roll formed to conform to the radius of the column C plus the thickness of the spacer ring 14. The spacer ring 14 is made as an extrusion of flexible plastic material such as a suitable vinyl composition. Preferably, the ring has a hollow core to add flexibility and to conserve material. It readily bends to conform to the column C. The spacer ring 14 and the grounding member 16 interfit to determine a desired assembled relationship. For this purpose, the spacer ring 14 has a lip 20 that forms a shallow groove 22 for reception of the upper edge of the grounding member 16.

Prior to installation, the ends of the ring 14 and the ends of the grounding member 16 are not joined together, but are left free. At the site of installation, the

two parts are, or have been, interfitted. The adjacent ends are axially separated to cause them to assume the configuration of a one turn helix, thus to provide an access opening whereby the parts can be slipped over the column C. Thereafter, the ends are repositioned and the normal circular configuration reassumed.

After the assembled spacer ring 14 and grounding member 16 are positioned at the proper ceiling height, they are clamped together and to the column C by a clamping band 24 as shown in FIG. 3. The band 24 has fittings of known construction for mounting draw screw members 26 and 28. The band 24 is accurately positioned by being seated in a shallow channel 30 formed in the stem 18 of the grounding member 16.

The two part construction is exceedingly simple, and easily installed to provide a neat finished appearance between the ceiling tile and the column.

DESCRIPTION OF SECOND EMBODIMENT

In the form of the invention shown in FIG. 4, a grounding member 32 is provided that is similar to the grounding member 16 of the previous form. In the present example, however, the grounding member simply provides an edge 34 instead of a flange. To this edge, plaster or moldable material is applied, the edge serving as a ready means for trimming the splashings to provide a neat well defined terminus for the ceiling material.

In the present example, the grounding member 32, being of straight section, is easily flexed at the building site to conform to the column curvature. Installation is easily accomplished by assembling the spacer ring 14 and the grounding member 32 while in their straight configuration, and then flexing both into position for cooperation with the clamping band.

Intending to claim all novel, useful and unobvious features and combinations of features shown or described, I claim:

1. In a building structure having a vertically extending, substantially cylindrical column, the combination therewith of:

a. a spacer ring made of flexible material adapted to surround said cylindrical column;

b. a gounding member surrounding the spacer ring, and made of material bendable to a curved configuration to conform to the radius of the cylindrical column and said spacer ring, said grounding member having a simple cross-sectional configuration to facilitate bending thereof;

c. clamp means for holding the grounding member and the spacer ring to the cylindrical column;

d. said grounding member having a distal part projecting axially beyond said spacer ring and along said column to form therewith an annular channel or reveal;

e. said grounding member having a flange projecting radially outwardly in a substantially horizontal plane to provide a support over which finish tile and the like material may be placed with said flange concealing, from below, the edges of said tile and the like material; and

f. finish material placed over said flange support.

2. The combination as set forth in claim 1 in which said grounding ring is performed to a curved configuration.

3. The combination as set forth claim 1 in which said spacer ring has a lip providing a pocket interfitting the proximal end of said grounding member to hold the spacer ring and said grounding member in assembled relationship and to determine a relative axial position therebetween.

4. In a building structure having a vertically extending, substantially cylindrical column, the combination therewith of:

a. a spacer ring made of flexible material surrounding said column;

b. a grounding member surrounding the spacer ring, and made of resilient material bendable to a curved configuration to conform to the radius of the column and said spacer ring, said grounding member having a simple cross sectional configuration to facilitate bending thereof;

c. a clamping band holding the grounding member and the spacer ring to the column;

d. said grounding member having a distal part projecting axially beyond said spacer ring to form therewith an annular channel or reveal, said grounding member having a radial flange projecting from said distal part; and

e. ceiling tile cut to rest on said flange.

5. In a building structure having a vertically extending, substantially cylindrical column, the combination therewith of:

a. a spacer ring made of flexible material surrounding said column;

b. a grounding member surrounding the spacer ring, and made of resilient material bendable to a curved configuration to conform to the radius of the column and said spacer ring, said grounding member having a simple cross sectional configuration to facilitate bending thereof;

c. a clamping band holding the grounding member and the spacer ring to the column;

d. said grounding member having a distal part projecting axially beyond said spacer ring to form therewith an annular channel or reveal, said distal part terminating in an edge; and

e. moldable finish material surrounding said grounding member with the said moldable finish material flush with and abutting said edge.

6. In a building structure having a vertically extending, substantially cylindrical column, the combination therewith of:

a. a spacer ring made of flexible material adapted to surround said cylindrical column;

b. a grounding member surrounding the spacer ring, and made of material bendable to a curved configuration to conform to the radius of the cylindrical column and said spacer ring, said grounding member having a configuration substantially as a nominally flat strip to facilitate its being flexed at a building site to conform to the curved configuration of said cylindrical column;

c. clamp means for holding the grounding member and the spacer ring to the cylindrical column;

d. said grounding member having a distal part projecting axially beyond said spacer ring and along said column to form therewith an annular channel or reveal;

e. said distal part terminating in an edge to which moldable finish material can be applied with the edge serving to trim excess finish material; and

f. finish material applied to the edge of said distal part.

7. The combination as set forth in claim 6 in which said spacer ring has a lip providing a pocket interfitting the proximal end of said grounding member to hold said grounding member and said spacer ring in assembled

relationship and to determine a relative axial position therebetween.

8. In a building structure having a vertically extending, substantially cylindrical column, the combination therewith of:

a. a spacer ring made of flexible material adapted to surround said cylindrical column;

b. a grounding member surrounding the spacer ring, and made of material bendable to a curved configuration to conform to the radius of the cylindrical column and said spacer ring, said grounding member having a simple cross-sectional configuration to facilitate bending thereof;

c. clamp means for holding the grounding member and the spacer ring to the cylindrical column;

d. said grounding member having a distal part projecting axially beyond said spacer ring and along said column to form therewith an annular channel or reveal;

e. said grounding member having a flange projecting radially outwardly in a substantially horizontal plane to provide a support over which finish tile and like material may be placed with said flange concealing, from below, the edges of said tile and like material; and

f. finish material placed over said flange support.

* * * * *

United States Patent [19]

Houseman

[11] **Patent Number: 4,664,390**

[45] **Date of Patent: May 12, 1987**

[54] **WEATHER SEAL DEVICE FOR CONDUIT EXTENDING THROUGH RIDGED SURFACE**

[75] Inventor: **David G. Houseman**, Richmond, Australia

[73] Assignee: **John Deks Australia Pty. Ltd.**, Bayswater, Australia

[21] Appl. No.: **723,035**

[22] Filed: **Apr. 15, 1985**

[51] Int. Cl.[4] F16J 15/02; E04D 13/14

[52] U.S. Cl. ..... 277/12; 277/212 FB; 52/58; 285/42

[58] Field of Search ..... 277/9, 12, 32, 213, 277/169, 212 FB; 285/3, 4, 42–44; 52/58–60, 199

[56] **References Cited**

U.S. PATENT DOCUMENTS

1,544,761	7/1925	Kiefer	285/42
1,683,548	9/1928	Hughey	285/43
1,710,304	4/1929	Flynn et al.	285/42
4,120,129	10/1978	Nagler et al.	285/44 X
4,211,423	7/1980	Reech	277/12 X
4,333,660	6/1982	Cupit	285/42 X

FOREIGN PATENT DOCUMENTS

2360538	6/1975	Fed. Rep. of Germany	285/44
2523575	12/1975	Fed. Rep. of Germany	285/43
2951275	7/1981	Fed. Rep. of Germany	52/58
627271	6/1927	France	285/43
1287555	2/1962	France	52/58

Primary Examiner—Robert S. Ward

Attorney, Agent, or Firm—Laughlin, Markesohn Lagani & Pegg

[57] **ABSTRACT**

A weather seal device for providing a seal between a surface having longitudinal ridges and/or valleys and an elongate conduit extending therethrough, the device having an apertured base of resilient deformable material and a sleeve of resilient material integral with the base and projecting from one side. The base in use is superimposed on the surface and the elongated conduit extends through the aperture and through the sleeve. The base has a marginal edge portion to be positioned in use so that it extends in a direction inclined in the direction of the longitudinal ridges and/or valleys. The marginal edge portion is contoured along its length in a direction normal to the plane of the base, so that in a free state the length of the marginal edge portion measured along the contours is greater than the linear length.

15 Claims, 4 Drawing Figures

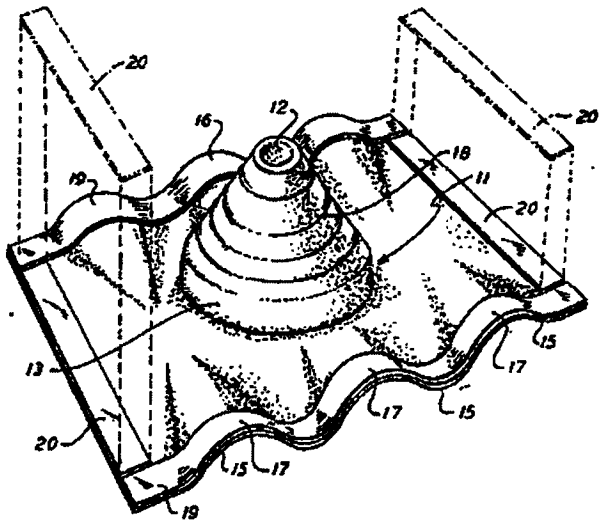

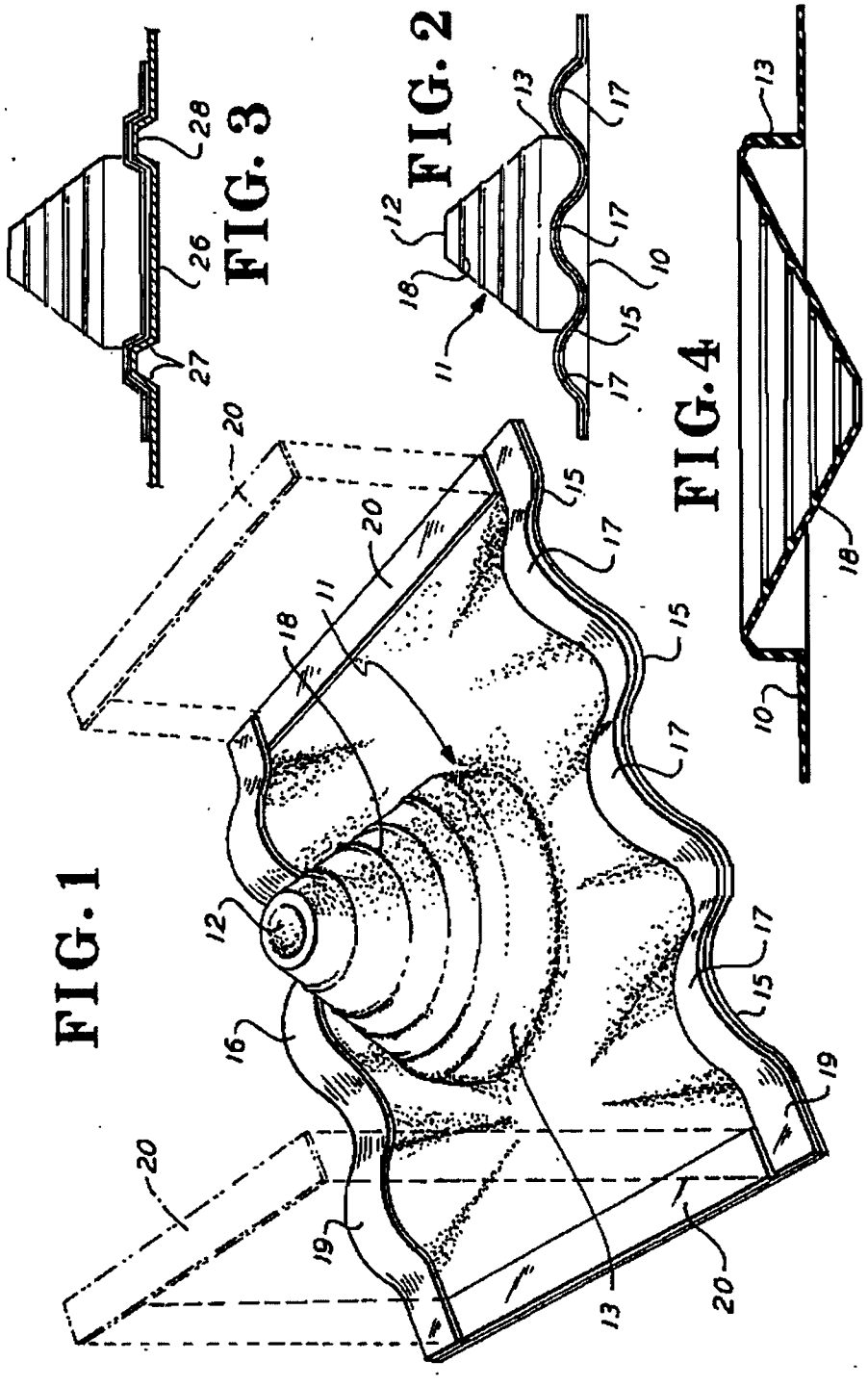
FIG. 1
FIG. 2
FIG. 3
FIG. 4
10
11
12
13
15
16
17
18
19
20
26
27
28

WEATHER SEAL DEVICE FOR CONDUIT EXTENDING THROUGH RIDGED SURFACE

This invention relates to an improved seal device for providing a weather seal between an elongate member and a non-planar surface such as a roof or wall of a building or like structure.

BACKGROUND OF THE PRIOR ART

There are currently in use in Australia seal devices for this purpose comprising an apertured base member including a non-metallic apertured flange element of resilient material bonded in face-to-face relation to a continuous peripheral metallic flange, and a sleeve member of resilient material integral with the base member and which extends outwardly therefrom to receive the elongate member. The base member is in use secured to the non-planar surface, and is of a non-resilient manually deformable nature so that, in use, it may be deformed to conform to the contour of the non-planar surface and will substantially retain such deformed contour. The sleeve member has an end remote from the base member which is adapted to receive said elongate member in sealing engagement therewith when the seal device is in use. The sleeve member, between the said remote end thereof and the base member, is sufficiently flexible to accommodate in use misaligament between the base member and the remote end of the sleeve, that may arise during installation or during the service life of the seal device.

The seal device above referred to is described in more detail in U.S. Pat. No. 4,333,660 in the name of G. M. Cupit. This seal device is very effective when used for pipes or ducts of a size up to about 400 mm diameter or similarly sized rectangular. However in many applications, as encountered in industrial and commercial building, it is required to seal about large pipes or ducts, as used in ventilation and air conditioning systems, frequently of diameters of 600 mm and above.

When sealing around ducts of this order of size the number of ridges or valleys over which the base member of the seal device may extend is increased. This requires a corresponding increase in the length of material required in the base member edge area to accommodate the degree of contouring necessary for the base member to follow the ridges and valleys. Also the increased degree of contouring in the edge area of the base member produces an increased degree of distortion over the general area of the base flange, and this distortion may extend into the sleeve member itself.

If we consider the prior proposed seal device in a large size, and having a flat rectangular shaped base flange, with a continuous one piece deformable metal strip along the complete marginal edge, the following problems arise in use. When the two opposite edge portions of the base member, which extend transversely across the ribs and valleys of the sheet, are contoured to follow the profile of a roof sheet, the length of these two edge portions is shortened. Consequently the two longitudinally disposed edge portions of the base member are required to move towards one another, as they are rigid at their ends with the ends of the two transverse contoured edge portions. However as the centrally located sleeve member is relatively stiff compared to the flange, the majority of the inward movement is accommodated in distortion of the area of the base flange on either side of the sleeve member.

This can result in folds and pockets in the base flange extending between the ridges of the roof sheet, which functions as a dam to water flow. This damming of the water flow is not acceptable as it aggravates leakage problems, especially in so-called flat and low pitched roofs.

If the sleeve member is made more resilient, so that it may deflect to absorb part of an inward movement of the longitudinal edges, this reduces the maximum size the of duct that may pass through the sleeve member.

Further with the one piece metal strip about the edge portion of the base member, the position of the two side portions of the strip is determined solely by the degree of shortening of the transverse portions of the strip subjected to the contouring. This can result in the side portions being positioned where it is inconvenient or difficult to secure them in sealed contact with the roof sheet. Such a location may be on a fold in the roof sheet, or on a vertical or near vertical side of a ridge or valley.

Similar problems exist if the seal device of the prior art has a circular flange with a continuous metal strip secured thereto along the perimetal marginal portion. The greater the amount of contouring of the strip required to accommodate the ridges and valleys of the roof sheet, the greater is the reduction of the diameter of strip and the degree of folding required of the flange inwardly of the perimetal strip.

SUMMARY OF THE INVENTION

It is therefore the object of the present invention to provide an improvement in the weather seal device which is effective in operation, convenient to install on a wide range of surface contours and elongate member cross-sections, and reduces or overcomes the problems above discussed.

With this object in view there is provided a weather seal device including a marginal edge portion comprising a deformable non-resilient flange element, and a resilient flange element attached thereto, each contoured so that the length of said edge portion measured along the contour is greater than the linear length thereof. These measurements are made when the edge portion is in the free as produced state and supported on a substantially flat surface.

Preferably the base member is moulded to the required contour during curing of the resilient material. The contouring may extend inwardly from the marginal portion and progressively decrease in height to blend smoothly into the base member at locations inwardly from the edge thereof.

It is to be understood that the contour provided in the marginal portion of the base member is not intended to correspond closely to the contour of the ridges and valleys on the surface to which the seal device is to be fitted. The contouring of the marginal portion provides additional material that may be reshaped to complement the configuration of the surface, without excessive distortion of the portion of the base member located between the marginal portion and the sleeve member and/or the sleeve member itself.

The reduction or elimination of distortion of the base member and sleeve, resulting from the additional length available in the marginal portion for conforming the base member with the surface to which the seal device is to be fitted, is important to ensure that water flow freely around the sleeve member and is not trapped in or behind folds or pockets formed in the base member. Also distortion of the sleeve member, which may re-

duce the effective diameter thereof and so reduce the maximum size elongate member that may be passed therethrough, can be reduced or eliminated.

Conveniently a strip of non-resilient manually deformable material is secured to the marginal edge portion of the base member along substantially the length thereof and follows the contour thereof. The strip and the marginal edge portion of the base member secured thereto may thus be non-resiliently deformed to complement the contour of the surface to which it is to be fitted. Also when in use the marginal edge portion may be pressed between the strip and the surface to provide a weathertight seal therebetween.

Preferably the contouring of the strip and the marginal portion of the resilient base member is in the form of a series of corrugations generally transverse to the direction of the length of the strip. The corrugations may be of an arcuate form or channel form or any other convenient contour.

The non-resilient deformable strip may conveniently be made of any appropirate material such as one of the soft matals particularly aluminium or aluminium alloy. Also preformed holes may be provided in the strip to provide a guide for drilling holes through the base member and through the sheet of material to which the sealing device is fitted during assembly. Suitable fastenings may be subsequently inserted through the holes.

In a preferred form the base member is of a generally rectangular outline with the sleeve projecting generally centrally therefrom. The strips of non-resilient deformable material are placed along two opposite parallel edges of the rectangular base member. Further strips of non-resilient deformable material may be provided along the other two edges of the flange, these strips not being rigidly connected to the strips to which the contours are applied.

In one preferred form the uncontoured strips are produced as a separate item to be assembled to the base member during installation, this construction permits the operator to select the most desirable location to place the strips in each particular installation, having regard to the longitudinal ridges and valleys on the sheet to which the seal device is being fitted. In this latter form the strips may be provided with a suitable contact adhesive on one surface, so that they may be bonded to the resilient flange by the operator at the selected location. Again the strips may be provided with preformed holes to receive fastening devices during installation.

The concept of having strips bonded to the transverse edge of the base member, so as to in installation lie across the valleys and ridges, and to have non-detached strips for fit to the longitudinal edges of the base member to extend in the direction of the valleys and ridges during installation, has advantages irrespective of whether the strips bonded to the flange are contoured or straight.

Accordingly, in one modified form of the invention the seal device has a base member comprising a flange of resilient flexible material to which the sleeve member is integrally formed, and has two strips of non-resilient deformable material extending along two opposite edges of the flange and bonded thereto in face-to-face relation, and two unattached strips of non-resilient deformable material are provided which may, during installation be fitted to the flange along the other two opposite edges.

BRIEF DESCRIPTION OF THE DRAWINGS

FIG. 1 is a perspective view of a seal device in accordance with the invention.

FIG. 2 is a side view of the seal device shown in FIG. 1 fitted to a surface shown in cross section having longitudinal ridges.

FIG. 3 is a side view of the seal device shown in FIG. 1 fitted to a surface shown in cross section having longitudinal ridges of a second configuration.

FIG. 4 is a transverse sectional view of a method of molding the seal device shown in FIG. 1.

DETAILED DESCRIPTION OF THE INVENTION

The seal device comprises a flange 10 of resilient readily deformable material, such as natural or synthetic rubber, having an integral sleeve 11 extending from the upper face of the flange. The sleeve 11 has a tapered portion 18 tapering toward the upper free end 12, and at the lower end has a generally cylindrical portion 13 that connects the tapered portion 18 to the flange 10. The wall of the cylindrical portion 13 is preferably somewhat thicker than the adjacent portion of the flange 10 and tapered portion 18 to provide greater resistance to distortion in use. The junction areas between the cylindrical portion 13 and the flange 10 and tapered portion 18 are sufficiently flexible to accommodate misalignment of the cylindrical portion relative to the other parts of the seal device, as may be necessary to normal use.

Spaced along the tapered portion 18 are a plurality of external ridges 14 denoting where the sleeve may be cut off to suit elongate members of different diameters. The ridges also provide a reinforcement about the edge of the open end of the sleeve so formed.

The flange 10 is of generally rectangular shape with the sleeve 11 disposed generally central thereof. In use the two opposite edges 15 and 16 of the flange are intended to be disposed across the direction of ridges and or valleys in the surface to which the seal device is to be fitted. Along each of the edges 15 and 16 the flange is provided with a number of contoured portions 17 which are displaced from the normal flat plane of the flange. In the example shown these contoured portions are generally arcuate, but may be of other shapes. The contoured portions 17 are of a maximum height at the edge of the flange and over the inner portion decrease in height to blend smoothly into the flat portion of the flange inwardly from the edge.

Along each edge 15 and 16 of the flange 10 there is provided a strip 19 of non-resilient deformable material such as aluminium or the like. Each strips are contoured to the same shape as the contoured edge portion of the flange, and is bonded or otherwise secured thereto in face to face relation. Conveniently the strips 15 and 16 may be bonded to the flanges during curing of the flange in a heated mould. Separate strips 20 may be provided to extend along the other edges of the flange 10. The strips 20 are independent of the strips 15 and 16 and are preferably spaced a short distance therefrom at the ends. This provides more freedom of movement of the flange material to avoid excessive folding in the area adjacent the sleeve. Also as previously stated it enables the operator some discretion in selecting where the side edges of the flange is to be fastened to the roof sheet.

It is preferable for the strips 20 to be free and not affixed to the flange 10 prior to installation. The side

edges of the flange tend to take up a slightly outwardly bowed shape during installation. This would be prevented if the strips were secured to the edge portion, and result in further folding or buckling of the flange inward of the edge. Also a more pleasing appearance is obtained by fitting the free strip in situ during installation so the strip is straight, parallel to the ridges of the roof sheet, and excess flange material outside of the strip may be cut off.

In one form the strips 20 may be coated on one face with a contact adhesive so that they may be applied to the flange at the appropriate location during installation of the seal device.

The preceding description has been specifically directed to providing a weather seal about an elongate member extending in sealing about a member or structure mounted on a roof or wall of a building, or in like situation. Examples of such structures are sky-lights, ventilators, and walls or parapet that adjoin a roof. As such structures usually have a flat surface there remains the problem that the length of the structure to be sealed against is less than that of the non-planar roof or wall. Accordingly, sealing devices for use in these areas also require one edge portion of the resilient sealing material to be moulded to a contour so the length measured along the contour is greater than the linear length of the edge portion. Preferably, as previously described, a strip of non-resilient deformable material, such as a metal strip, is bonded or otherwise secured to the contoured portion and has the same contour. When it is required to seal between a non-planar surface, such as a roof or wall and a flat surface which intersects same, the seal device may be a strip of resilient material contoured as above discussed along at least part of the length of one edge with the opposite edge flat. A metal strip may be provided along the flat edge also.

FIG. 3 of the drawings weather seal device described with reference to FIGS. 1 and 2 fitted to a roof sheet 25. The sheet 25 has longitudinal ridges 26 having flat inclined sides 27 and a flat top 28. The curved or arcuate contoured edge of the flange 10 in FIG. 1 has been re-shaped to conform to the profile of the sheet 25, and this has been achieved without a substantial change in the overall length of the edge portion of the flange.

The extent of the contouring of the edge portion is generally of the order that will reduce the length of the edge by 7 to 12% of the flat length. That is, after contouring the overall length is 93 to 88% of the flat length. In the roofing industry this is generally referred to as 93 to 88% yield. In different countries or locations the profile of normally used roof sheets may vary substantially, and thus the degree of contouring or percentage yield may vary substantially from the above quoted figures. In Australia there is one particular roof sheet which has approximately 25% yield. However, it has been found that one particular contour of the edge portion of the flange will accommodate a range of roof sheets of different yields. One particular contour does cover effectively the above stated range of 93 to 88% yield.

The weather seal device as described, with reference to FIGS. 1 and 2, may be produced as a moulding of rubber or like resilient material. In order to simplify the die for moulding such an article, part of the sleeve member may be formed as a re-enterant section that extends back through the aperture in the base member.

The mode of moulding the seal device is illustrated in the transverse sectional view. FIG. 4, wherein the tapered part 18 is initially moulded so that it extends from the upper end of the cylindrical portion 13 concentrically through the cylindrical portion 13 and the aperture defined by the flange 10, to project below the flange 10. Arranging the moulding of the seal device in this way substantially reduces the overall height of the moulding and consequently the cost of the mould. The height reduction is also convenient for subsequent storage and packaging.

At the time of use, or at a convenient time therefore, the tapered portion 18 may be displaced upwardly to occupy the position shown in FIG. 1, and will naturally retain that position.

I claim:

1. A weather seal device for providing a seal between a surface having longitudinal ridges and an elongate member extending therethrough, said device comprising an apertured base member of resilient deformable material to be located in use in superimposed relation on the surface with the elongate member extending through the aperture, a sleeve member of resilient material integral with the base member and projecting from one side thereof, said sleeve member enclosing said aperture in the base member so that in use the elongate member also extends through the sleeve member, the end of the sleeve member remote from the base member being adapted to in use sealably engage the exterior of the elongate member, said base member having a marginal edge portion extending along one edge of the base member,a marginal portion spaced from the junction of the sleeve member and the base member and to in use be positioned to extend in a direction generally inclined and across the direction of the longitudinal ridges of the surface, said marginal edge portion being contoured along its length in a direction normal to the plane of the base member, so that the length of the marginal edge portion measured along the contours is greater than the linear length thereof, when the measurements are made when the edge portion is in the free as produced state, said base member in the free, as-produced state having a substantially flat area between the contoured marginal edge portion and the junction of the base member and the sleeve member, said contours in the marginal edge portion in use being deformed to follow the contour of the surface having longitudinal ridges with limited alteration of the linear length of the marginal edge.

2. A weather seal device as claimed in claim 1 wherein a strip of non-resilient manually deformable material is secured to said marginal edge portion of the base member along substantially the length thereof and follows the contour thereof, whereby the strip and the marginal edge portion of the base member secured thereto may be non-resilient deformed to complement the contour of the surface to which it is to be fitted and when in use the marginal edge portion may be pressed between the strip and the surface to provide a weather-tight seal therebetween.

3. A weather seal device according to claim 2, wherein the base member has two marginal edge portions and said marginal edge portions that extend in a direction transverse to the strips of non-resilient manually deformable material are of resilient deformable material.

4. A weather seal device as claimed in claim 2, wherein the strips are made of aluminium.

5. A weather seal device as claimed in claim 1 wherein two marginal edge portions of the base member are contoured along their length, said marginal edge

portions being located on opposite sides of the sleeve member.

6. A weather seal device as claimed in claim 5 having a strip of non-resilient manually deformable material secured to each of said two marginal edge portions.

7. A weather seal device as claimed in claim 1 wherein the contour of the marginal edge portion extends from said portion inwardly of the base member toward the sleeve member.

8. A weather seal device as claimed in claim 7 wherein the height of the contouring above the plane of the base member is progressively decreased from the marginal edge portion inwardly towards the sleeve member.

9. A weather seal device as claimed in claim 1 wherein the sleeve member has a substantially cylindrical lower portion at the lower end and an upwardly tapered upper portion.

10. A weather seal device as claimed in claim 9 wherein the cylindrical lower portion has a wall thickness greater than the thickness of the flange and of the tapered upper portion adjacent the respective ends of the cylindrical portion.

11. A weather seal device as defined in claim 1 wherein a marginal edge portion to be secured in use to a surface having longitudinal ridges, said marginal edge portion being made of a resilient material and contoured along its length in a direction normal to the plane of the edge portion so that in a free state the length of the edge portion measured along the contours is greater than the linear length thereof.

12. A weather seal device as claimed in claim 11 wherein a strip of non-resilient deformable material is secured to said marginal edge portion along substantially the length thereof and follows the contour thereof, whereby the strip and the marginal edge portion secured thereto may be non-resiliently deformed to complement the contour of the surface to which it is to be fitted, and when in use the marginal edge portion may be pressed between the strip and the surface to provide a weathertight seal therebetween.

13. The weather seal device as claimed in claim 1 wherein a portion of the sleeve member remote from the base member is formed concentric with another portion of the sleeve member adjoining the base member.

14. The device according to claim 13 wherein said another portion of the sleeve member is moulded with a thicker wall than the adjoined part of the remote section of the sleeve member.

15. The device according to claim 11 wherein said portion of the sleeve member remote from the base member is tapered towards the remote end of the sleeve member, and as moulded the remote end is below the base member.

* * * * *

United States Patent [19]

Hansen

[11] **Patent Number: 4,673,034**

[45] **Date of Patent: Jun. 16, 1987**

[54] **CASED WATER WELLS HAVING FLEXIBLE PAD**

[76] Inventor: **Donald J. Hansen**, 133 Elm St., Elkins, W. Va. 26241

[21] Appl. No.: **816,260**

[22] Filed: **Jan. 6, 1986**

[51] **Int. Cl.**[4] **E21B 33/02**

[52] **U.S. Cl.** ..... **166/75.1**; 166/81; 175/211; 277/212 F

[58] **Field of Search** ..... 166/81, 82, 84, 85, 166/88, 92, 75.1; 277/212 F; 175/211; 52/102

[56] **References Cited**

U.S. PATENT DOCUMENTS

113,638	4/1871	Dewey	166/81
319,924	6/1985	Myers .	
507,777	10/1893	Berger et al.	285/42
1,494,234	5/1924	Gossett	285/42
1,540,192	5/1925	Smith	285/42
1,904,926	4/1933	Peters	166/75
2,054,308	9/1936	Tucker	285/42
2,079,835	5/1937	Bradley	166/75
2,532,341	12/1950	Shannon	166/96
2,697,240	12/1954	Barnes et al.	166/82
2,800,254	7/1957	Dinkelkamp	277/212 F
2,985,465	5/1961	Church	285/42
3,477,181	11/1969	Robinson	52/103
3,571,972	3/1971	Carter, Jr.	47/25
3,650,072	3/1972	Matvey	52/102
3,704,004	11/1972	Carter, Jr.	256/1
3,708,185	1/1973	Bilicki	285/42
3,722,587	3/1973	Diaz	166/88
3,788,655	1/1974	Hathaway	277/212 F
4,120,129	10/1978	Nagler et al.	52/219
4,145,584	11/1889	Reidy	92/161
4,160,347	7/1979	Logsdon	52/199
4,211,423	7/1980	Resech	277/212
4,470,606	9/1984	Knowles	277/27

FOREIGN PATENT DOCUMENTS

0445951	1/1948	Canada	166/88
2752309	5/1979	Fed. Rep. of Germany	175/211

OTHER PUBLICATIONS

Water Well Design Standards—Virginia Board of Health, Chapter 16-1, Series 111 (1984).

Recommendations of the U.S. Public Health Services Food and Drug Administration (1978), pp. 112, 114.

Primary Examiner—George A. Suchfield
Assistant Examiner—Terry Lee Melius
Attorney, Agent, or Firm—Curtis, Morris & Safford

[57] **ABSTRACT**

A cased water well comprising a generally tubular water well casing extending from subgrade to above grade. A flexible pad is attached to the water well casing for preventing aquifier contamination. The pad has an upwardly extending, generally tubular, flexible and water impermeable neck which is circumferentially continuous. The neck has an axially disposed opening which is adapted to be removably received over the upper terminus of the well casing and the neck is compressibly and sealingly attached to the outer surface of the well casing. A water impermeable flexible skirt is sealingly attached to the neck and extends radially outwardly a substantial distance in all directions from the neck. The flexible skirt has a lower surface which is adapted to be in contact with the earth and an upper surface which slopes continuously downwardly and outwardly from the neck to the outermost edges of the skirt.

10 Claims, 6 Drawing Figures

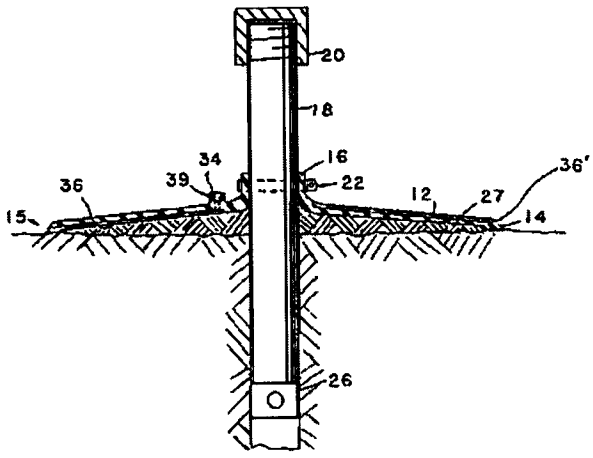

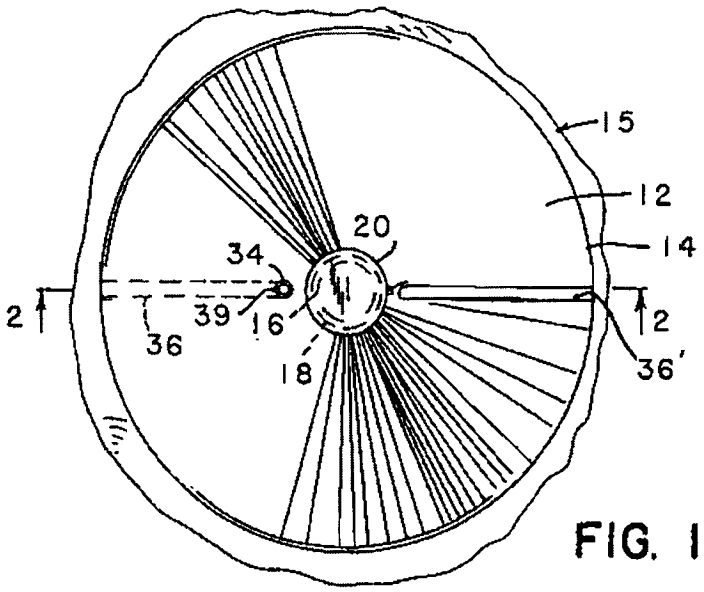

FIG. 1

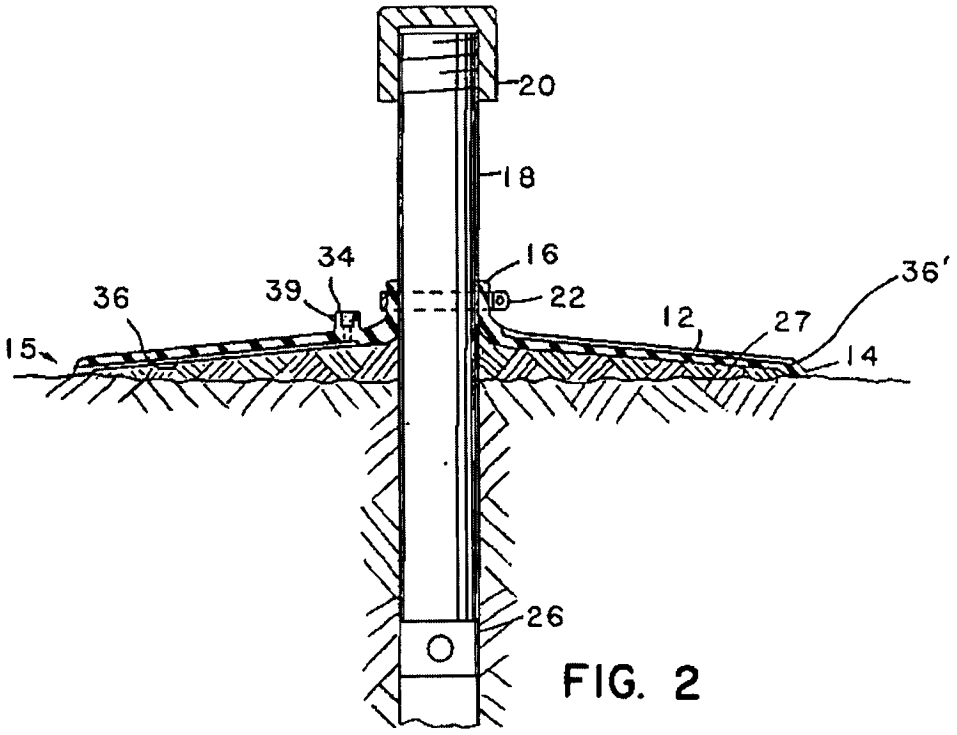

FIG. 2

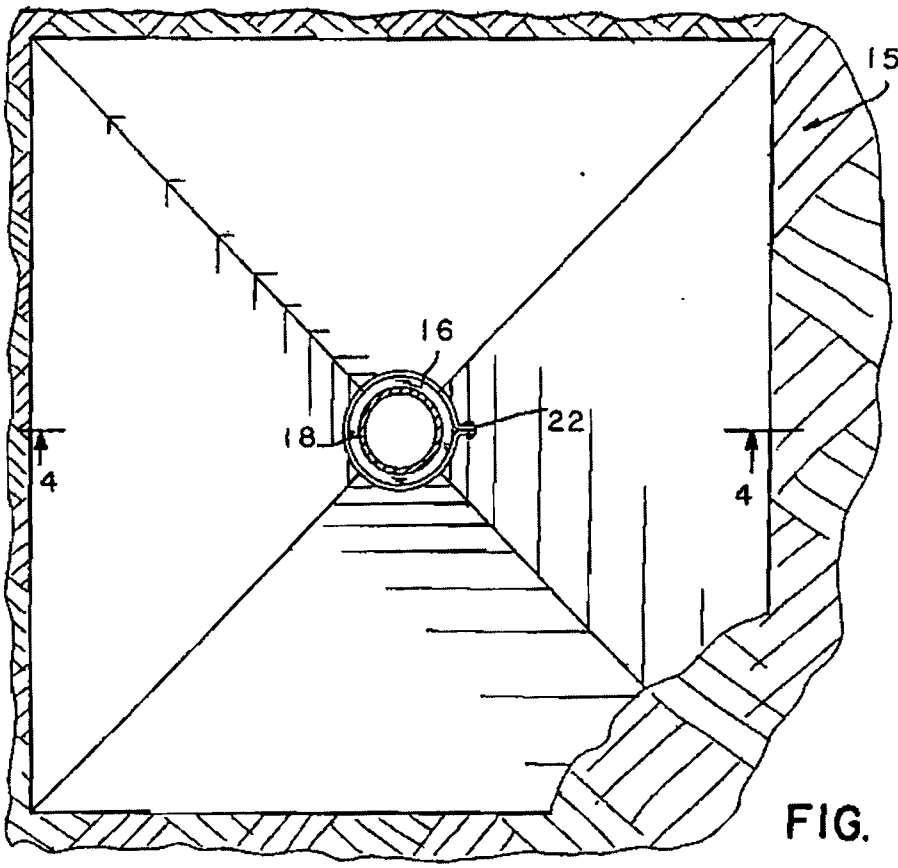

FIG. 3

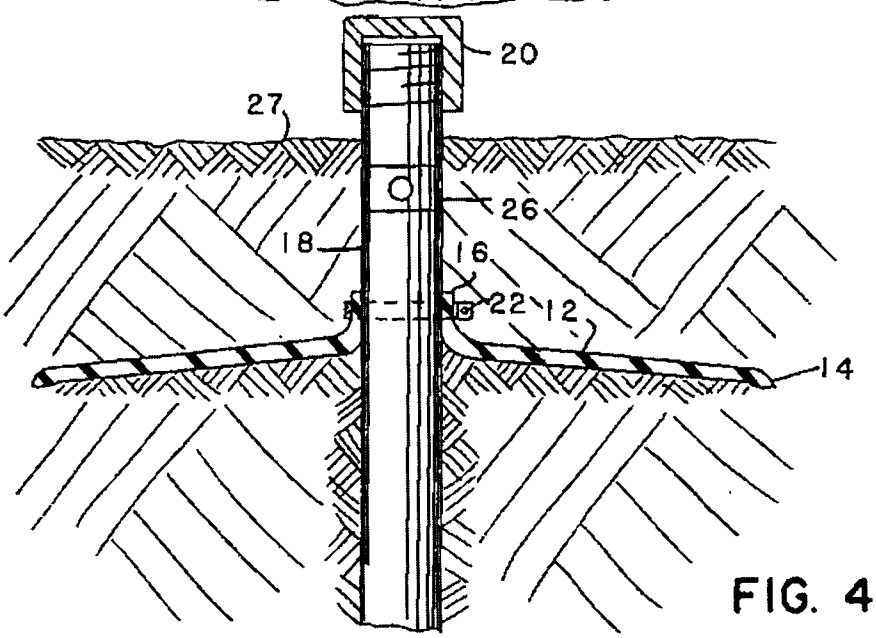

FIG. 4

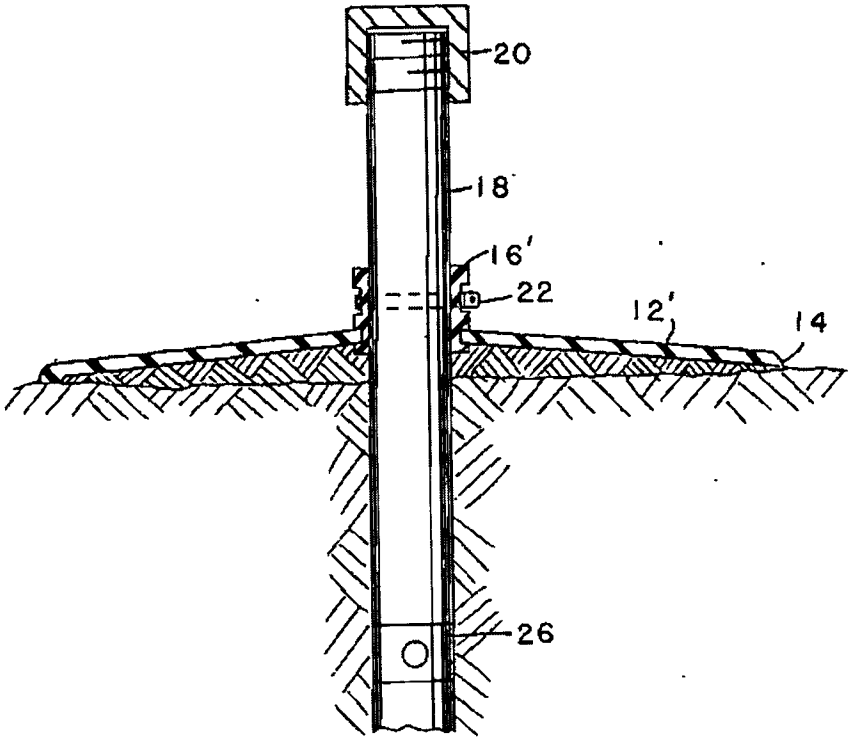

FIG. 5

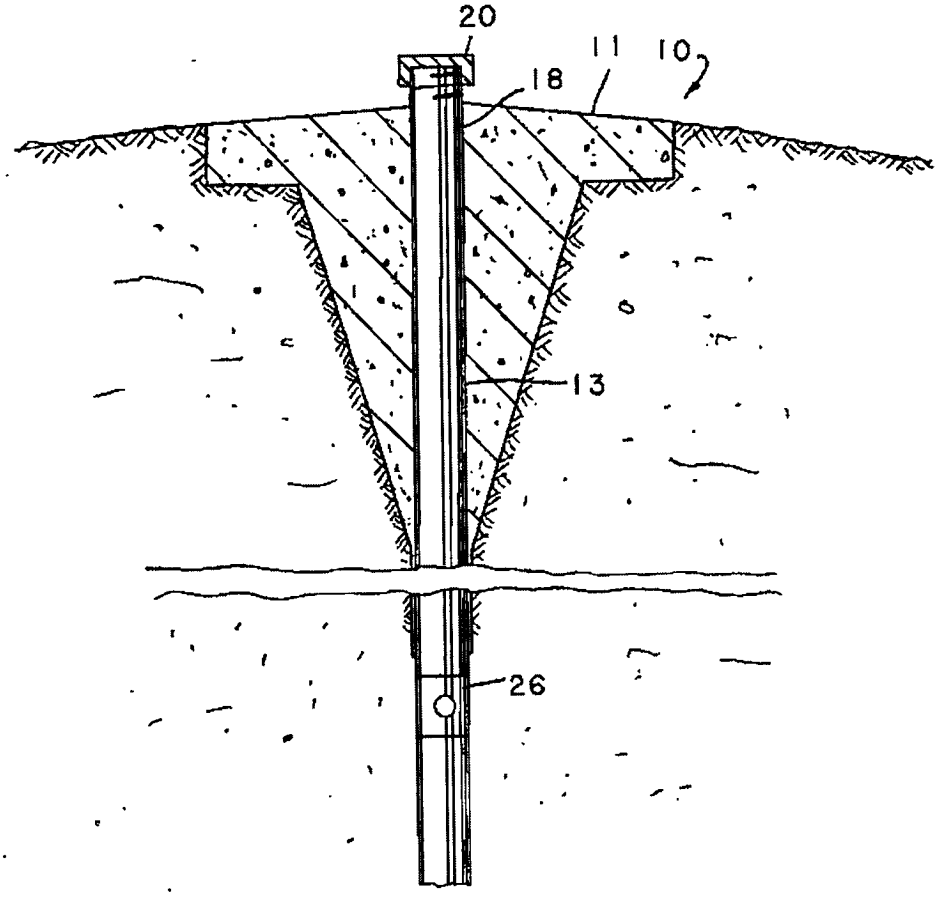

FIG. 6

CASED WATER WELLS HAVING FLEXIBLE PAD

FIELD OF THE INVENTION

The present invention relates to cased water wells and in particular to pads for such cased water wells.

BACKGROUND OF THE INVENTION

Water wells are commonly used for providing domestic water in rural areas and in some suburban areas. Such wells are commonly constructed by drilling, boring, or otherwise excavating a hole into the ground from the surface into a water-bearing stratum or aquifer. To prevent collapse of the hole, a generally tubular casing is inserted through the hole into the aquifer. This casing extends from the aquifer to above grade level, where the casing terminates and is typically covered by a sanitary well cap.

The casing will typically have an opening in it called a pitless well adapter for connection of piping for removal of the water. This opening is commonly placed below grade level, below the frost line, to prevent freezing of pipes attached to the opening in the casing. A pump or other means for extracting the water from the aquifer and raising it to the level of the opening in the casing is commonly attached at or near the upper terminus of the well casing, usually to the well casing itself.

Water found near the surface of soil, and indeed rain water itself, may contain significant contaminants. Furthermore, surface water will readily seep downwardly, or channel, immediately adjacent to the well casing. If contaminated surface water is allowed to contact the outside of the casing before it has percolated through several feet of soil to filter and purify the water through the action of bacteria, contaminated water can readily channel down adjacent to the casing and enter the aquifer, causing pollution.

To prevent this, cased water wells typically include a concrete pad surrounding the casing, and extending a substantial distance in all directions from the casing. This concrete pad has an upper surface which is sloped away from the casing so that rain water, dirt, oils from the pump or other contaminants will be drained away from the well casing to the outer edge of the concrete pad. Thus, surface water drained off the pad must percolate through several feet of soil before coming in contact with the outside of the casing.

The installation of this concrete pad is costly from the standpoint of time and material. Installing the concrete pad requires extra excavation of the soil around the upper portion of the well casing and a form for pouring the concrete.

The concrete pad must be free from cracks and the outside of the casing where it contacts the concrete must be sealed with a mastic or other sealant to prevent water from seeping through the concrete pad adjacent the outside of the casing at the point of entry of the casing. If the concrete pad is formed too soon after excavation of the soil around the casing, subsequent ground settling can cause cracking of the concrete which would defeat the purpose of the pad. Such ground settling can also cause rupturing of the mastic seal around the well casing, similarly defeating the purpose of the concrete pad. Furthermore, dirt can accumulate around the well casing at the point of entry through the concrete pad, contributing to weed and grass growth which, in turn, contributes to channeling

of water through this point of entry down the outside of the casing.

The concrete pad may be installed either at or near grade level or below grade level, below the pitless well adapter. When installed at or near grade level, inspection or repair of the pitless adapter below the concrete pad requires a great deal of excavation below the pad which, in turn, subjects the concrete pad to the potential for cracking and rupture of the mastic seal. Furthermore, inspection and excavation under the concrete pad can be very dangerous to personnel. Installation of the concrete pad below the pitless well adapter to minimize these problems requires much more excavation and resultant expense. In either case, concrete can only be installed within a certain range of temperatures, which prevents the installation of wells during times of the year when temperatures are too cold.

OBJECTS OF THE INVENTION

Accordingly, it is an object of the present invention to provide a water impermeable pad for deflecting surface water away from a well casing which is simple and inexpensive to install.

It is a further object of the present invention to provide a water impermeable pad which is flexible and which can adjust to uneven ground surfaces to insure proper drainage of water away from the well casing.

It is a still further object of the present invention to provide a water impermeable pad which can be installed without regard to surrounding temperature conditions.

It is a yet further object of the present invention to provide a water impermeable pad which can be conveniently installed over the upper terminus of the well casing, and removed without damage to the water impermeable pad whenever maintenance is necessary.

SUMMARY OF THE INVENTION

These and other objects of the present invention are achieved by the use of a flexible pad for attachment to a water well casing. This pad has a water impermeable flexible skirt which has an opening generally centrally disposed therein for receiving the upper terminus of a water well casing therethrough. Means are provided for sealably attaching this skirt at that opening to the water well casing.

In a preferred embodiment of the present invention, the pad has an upwardly extending, generally tubular, flexible and water impermeable neck. The neck is circumferentially continuous and has an axially disposed opening therethrough which is adapted to be removably received over the upper terminus of the well casing. The neck is compressibly and sealingly attached to the outer surface of the casing so that the connection is watertight. The pad also includes a water impermeable flexible skirt sealingly attached to this neck extending radially outwardly a substantial distance in all directions from the neck. This flexible skirt has a lower surface adapted to be in contact with the earth and an upper surface sloping continuously downwardly and outwardly from the neck to the outermost edge of the skirt.

In another preferred embodiment of the present invention, the skirt is integral with the neck.

The above and other objects, features and advantages of the present invention will be apparent from the following detailed description of an illustrative embodi-

ment thereof which is to be read in conjunction with the accompanying drawings.

BRIEF DESCRIPTION OF THE DRAWINGS

FIG. 1 is a plan view of the flexible pad of one preferred embodiment of the present invention;

FIG. 2 is a cross sectional view of the flexible pad of FIG. 1, shown installed onto a well casing at grade level;

FIG. 3 is a plan view of a flexible pad in accordance with another embodiment of the present invention;

FIG. 4 is a cross sectional view of the flexible pad of FIGS. 1 and 2, installed on the well casing below grade level;

FIG. 5 is a cross sectional view of the flexible pad of the present invention, with a separate skirt and neck-gasket; and

FIG. 6 is a cross sectional view of a concrete pad of the prior art, installed at grade level surrounding a well casing.

DETAILED DESCRIPTION OF THE PREFERRED EMBODIMENT

Referring first to FIG. 6, a cased water well having a concrete pad 10 in accordance with the prior art is illustrated. The concrete pad is formed in place around the well casing 18, and extends a substantial distance away from the well casing. The upper surface 11 of the concrete is sloped away from the well casing to provide drainage of surface water away from the casing. The concrete is formed in place and is rigid. To prevent water from seeping down between the casing and the concrete pad, a mastic or sealing compound 13 is installed between the concrete pad and the outside surface of the well casing.

Referring now to FIGS. 1 and 2, a flexible water impermeable pad 15 in accordance with one embodiment of the present invention is illustrated. The pad has a generally disc-shaped or circular skirt 12 with a continuous outer periphery or edge 14. This skirt is water impermeable and is dimensioned so that it extends radially away from the casing a substantial distance, preferably two feet or more. Further, its upper surface slopes away from the well casing continuously and downwardly in all directions. This ensures that any contaminants which may impinge on the skirt will be washed away from the well casing and avoids channeling of contaminated water adjacent to the well casing.

Skirt 12 of pad 15 should be made of a durable and flexible material, for example, rubber or neoprene or any suitable synthetic material. Preferably, skirt 12 is formed of a material which will withstand constant contact with the soil without undue degradation, since at least the lower surface of the flexible pad will constantly be in contact with soil. Furthermore, when the flexible pad is installed at grade level, the upper surface of the pad will be exposed to light and oxygen, and must also resist degradation from these environmental effects.

The skirt 12 connects to an upwardly extending generally tubular and circumferentially continuous neck 16 which is generally centrally disposed with respect to the outer edges of the skirt. Neck 16 is adapted to be received over the upper terminus of the well casing 18 when the sanitary cap 20 is removed. As illustrated in FIGS. 1 and 2, neck 16 is integral with skirt 12, although it is readily apparent that the neck could also be formed separately from the skirt, and suitably attached to the skirt in any suitable manner to prevent leakage between the neck and the skirt, such as gluing, heat sealing, or a bolt and gasket connection.

The neck 16 of the pad 15 should preferably be formed of a durable elastomeric material such as rubber or neoprene. These materials are sufficiently elastic to fit snugly over the well casing, and can be sealed watertight to the well casing conveniently with an ordinary compression hose clamp 22.

The skirt 12 can also be formed of other flexible materials such as polypropylene or similar plastics. In that case sealing of the pad to the well casing requires a separate elastomeric neck-gasket 16' between the skirt 12' and the well casing, as illustrated in FIG. 5, to seal the skirt to the well casing. When this construction is used, the neck-gasket 16' extends to the lowest surface of skirt 12'. In this manner, downward pressure on the upper-outside extremity of the skirt causes pressure against the lowest surface of the skirt to relieve stress around the compression hose clamp 22.

To install the flexible pad of the present invention onto a well casing, one excavates around the casing a sufficient distance so that the pitless well adapter 26 can be installed around the well casing. This excavation is then backfilled. The surface of the soil 27 surrounding the casing is built up and sloped away from the casing with approximately the same slope as is desired for the skirt 12 of flexible pad 15, when it is installed. The sanitary cap 20 is then removed from the upper terminus of the well casing, and the opening of the neck 16 of the flexible pad slipped over the upper end of the well casing and lowered until the lower surface of the flexible pad is resting on the sloped soil. The compression hose clamp 22 is then placed over the neck of the flexible pad and tightened, creating a secure, watertight seal between the neck and the well casing. Because the pad is flexible, the pad will not crack or break the seal between the neck and the well casing in the event of subsequent ground settling. Thus, the flexible pad can be installed immediately after backfilling the excavation. Furthermore, because the pad does not need to be formed in place, the pad can be installed in a wide variety of temperature conditions.

The pad of the present invention need not be circular as illustrated in FIG. 1, but can be any shape. Thus, the pad may have a rectilinear or square cross section, as illustrated in FIG. 3.

Under some circumstances, it may be advantageous to install the flexible pad below grade level, below the pitless well adapter. Such circumstances might be encountered in areas of such extreme cold or heat that even durable materials for the flexible pad might degrade unduly. Such a subsurface installation is illustrated in FIG. 4. The installation of the flexible pad of the present invention in subsurface installations is the same as with a grade level installation, except that additional excavation is required, and the pad is installed prior to installation of the pitless well adapter, so that the neck of the flexible pad may be conveniently slipped over the well casing without interference with the pitless well adapter. Furthermore, since underground pads are not subject to surface traffic and therefore need not be as flexible as above ground pads, underground pads can be constructed of less flexible materials, such as galvanized steel or similar metallic materials.

Because most pumping units for water wells are electric, it is usually necessary to have electrical conduit from the pump to a supply of electricity. It is therefore

preferable that the flexible pad incorporate provision for the electrical conduit. In the present invention, this is accomplished by providing an opening 34 in the skirt near the neck of the pad which is adapted to receive an electrical conduit down through the skirt. The lower surface of the skirt has a groove 36 which is adapted to receive the electrical conduit extending away from the neck of the flexible pad towards the supply of electricity. The opening for the electrical conduit also has a neck 34, similar in construction to the neck for the well casing. This neck can also be conveniently clamped around the electrical conduit with a compression hose clamp 39 to create a water tight seal between the neck and the electrical conduit. Alternately or in addition, a water impermeable conduit grove 36', as shown in FIG. 1, can be provided by molding, stamping, or other convenient means on the upper surface of the skirt 12. With the upper surface groove 36', it is not necessary to provide the neck 34 and hose clamp 39. Thus, the electrical conduit is neatly provided for while retaining the water impermeable features of the flexible pad of the present invention.

It is thus seen that the present invention, provides a water impermeable pad which is flexible, easy to install regardless of temperature conditions, resistant to cracking, and which positively seals against the well casing to prevent undesirable channeling of potentially contaminated water into the aquifer and can be conveniently and safely removed and replaced when maintenance is required.

What is claimed is:

1. A device for preventing external liquid borne contaminants from entering the aquifer of a tubularly cased water well by channeling down around the outside of the casing, said device comprising a water impermeable flexible skirt which is peripherally continuous extending a substantial radial distance away from said casing, said skirt having an opening generally centrally disposed therein for removably receiving the upper terminus of a water well casing therethrough, and means for removably sealingly attaching said skirt to the outer surface of said wter well casing at a fixed location a substantial distance below said terminus.

2. A device for preventing external liquid borne contaminants from entering the aquifier of a tubularly cased water well by channeling down around the outside of the casing, said device comprising:

an upwardly extending, generally tubular, flexible and water impermeable neck which is circumferentially continuous, said neck having an axially disposed opening therethrough which is adapted to be removably received over the upper terminus of said casing, said device further having means for compressibly and removably sealingly attaching said neck to the outer surface of said casing;

a water impermeable flexible skirt which is peripherally continuous sealingly attached to said neck and extending radially outwardly a substantial distance in all directions from said neck, said flexible skirt having a lower surface adapted to be in contact with the earth and an upper surface, said upper surface sloping continuously downwardly and outwardly from said neck to the outermost edge of said skirt.

3. The device defined in claim 2, wherein said skirt is generally rectilinear and said neck is generally centrally disposed with respect to the edges of said skirt.

4. The device defined in claim 2, wherein said skirt is generally circular and said neck is generally centrally disposed with respect to the edges of said skirt.

5. The device defined in claim 2, wherein said skirt is integral with said neck.

6. The device defined in claim 2, wherein said skirt is constructed of an elastomeric material.

7. The device defined in claim 2, wherein said skirt further comprises a molded-in groove in said lower surface of said skirt extending radially outward from the region of said skirt nearest said casing to the edge of said skirt, said groove being adapted to receive an electrical conduit.

8. A cased water well comprising:

a generally tubular water well casing extending from subgrade to above grade, said casing having an opening therein for removing water therefrom;

a device for preventing external liquid borne contaminants from entering the aqufier of a tubularly spaced water well by channeling down around the outside of the casing, said device comprising:

an upwardly extending, generally tubular, flexible and water impermeable neck which is circumferentially continuous, said neck having an axially disposed opening therethrough which is adapted to be removably received over the upper terminus of said casing, said device further having means for compressibly and removably sealingly attaching said neck to the outer surface of said casing at a fixed location a substantial distance below said terminus;

a water impermeable flexible skirt which is peripherally continuous sealingly attached to said neck and extending radially outwardly a substantial distance in all directions from said neck, said flexible skirt having a lower surface adapted to be in contact with the earth and an upper surface, said upper surface sloping continuously downwardly and outwardly from said neck to the outermost edge of said skirt.

9. The cased water well as defined in claim 8, wherein said device is disposed substantially below grade level and covered with fill.

10. The cased water well as defined in claim 8, wherein said flexible skirt is integral with said neck.

* * * * *

United States Patent [19]

Tiegs et al.

[11] **Patent Number: 4,676,513**

[45] **Date of Patent: Jun. 30, 1987**

[54] **ONE-PIECE SPLIT BOOT FOR UNIVERSAL JOINT**

[76] Inventors: Del V. Tiegs, 15878 E. Wind Cir., Sunrise, Fla. 33326; Randy G. Tiegs, 20631 NW. Miami Ct., Miami, Fla. 33169

[21] Appl. No.: 840,514

[22] Filed: Mar. 17, 1986

[51] Int. Cl.[4] F16J 15/52

[52] U.S. Cl. ..... 277/212 FB; 277/199; 277/215; 74/18; 403/51

[58] Field of Search ..... 277/212 R, 212 FB, 203, 277/204, 215, 199; 74/18, 18.1, 18.2; 403/50, 51

[56] **References Cited**

U.S. PATENT DOCUMENTS

2,226,388	12/1940	Richter	74/18.1 X
2,768,036	10/1956	Greenough	277/199
3,638,503	2/1972	Stipanovic et al.	74/18
3,660,213	5/1972	Moseley	74/18 X
3,717,351	2/1973	Liebig	277/199 X
4,211,423	7/1980	Reseck	277/12 X
4,396,656	8/1983	Still et al.	285/381 X
4,558,869	12/1985	Grove et al.	277/212 FB X

FOREIGN PATENT DOCUMENTS

1775265	8/1971	Fed. Rep. of Germany	277/212 FB
684106	3/1930	France	277/215
1155819	5/1985	U.S.S.R.	277/212 FB

Primary Examiner—Robert S. Ward
Attorney, Agent, or Firm—Malin, Haley & McHale

[57] **ABSTRACT**

A split boot formed from a unitary, flexible body shaped to be helically wrapped around a universal joint or the like. Once the flexible body is wrapped around the joint with the mating edges engaged a main body is formed having a generally hollow truncated conical configuration with a corrugated or helical shape. One end of the main body has a smaller circular cross section than the other end. Each end portion of the main body has cutting guide ridges such that the diameter of the aperture in the end may be varied by removing some of the material from the body.

11 Claims, 9 Drawing Figures

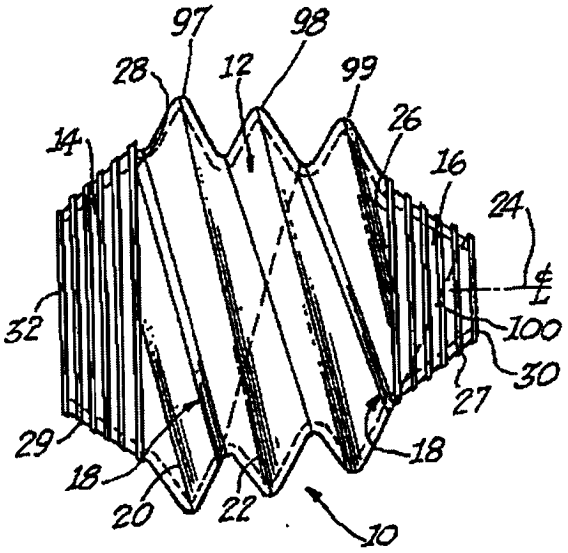

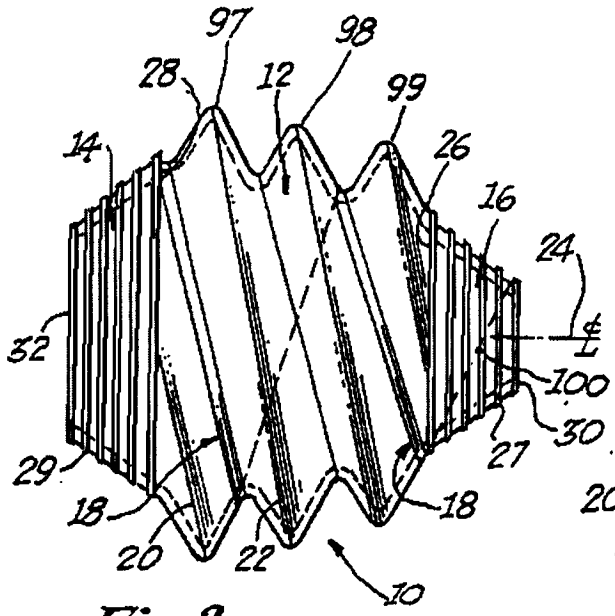

Fig.2.

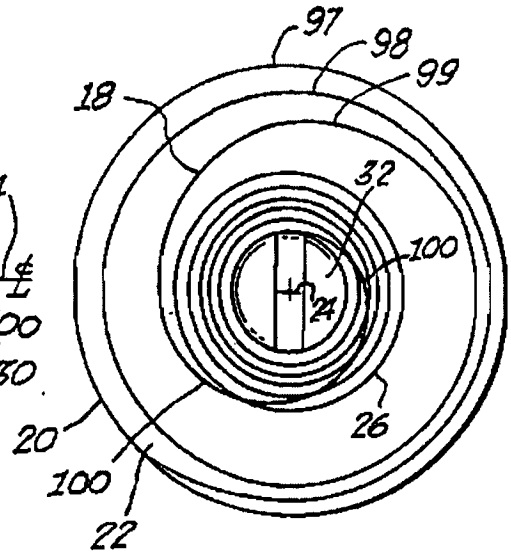

Fig.3.

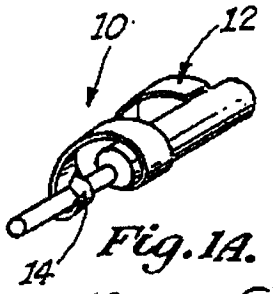

Fig.1A.

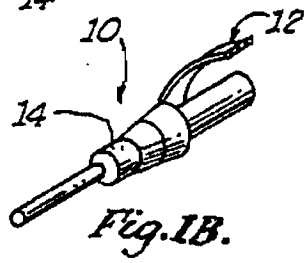

Fig.1B.

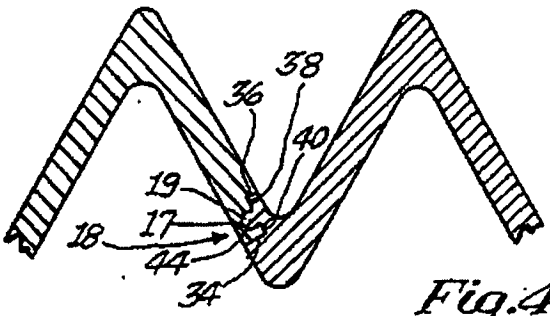

Fig.4.

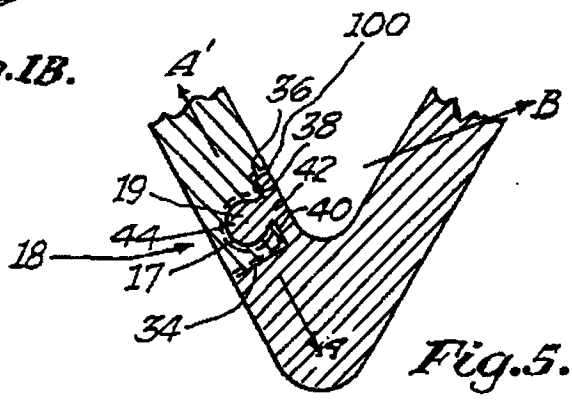

Fig.5.

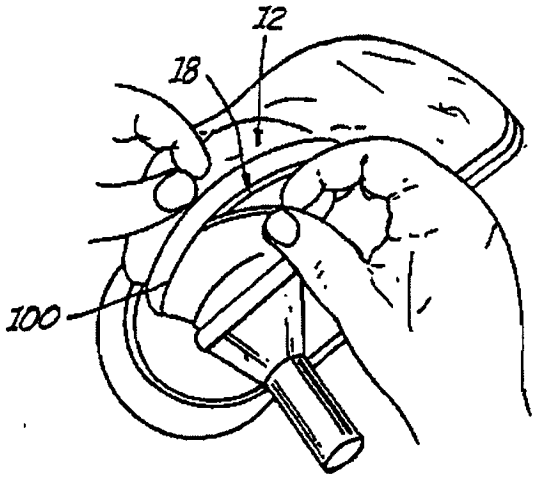

Fig. 6.

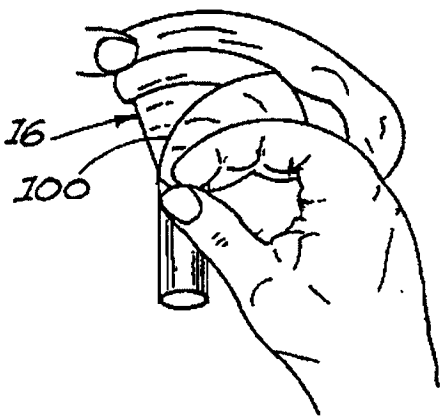

Fig. 7.

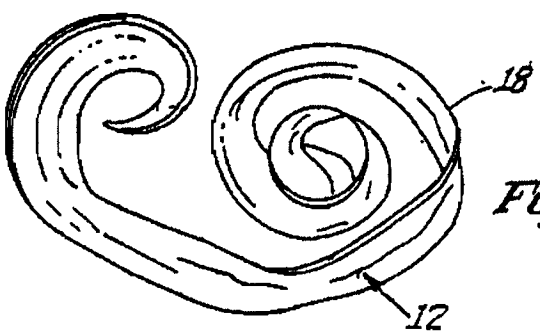

Fig. 8.

ONE-PIECE SPLIT BOOT FOR UNIVERSAL JOINT

BACKGROUND OF THE INVENTION

The present invention relates to boots for covering universal joints and the like and more particularly to unitary, flexible body having a first mating edge and second mating edge and shaped to be helically wrapped about a universal joint, coupling or other type of structure without disassembling the structure in which the first mating edge is engaged with the second mating edge thereby forming a removable boot for the universal joint or the like.

In the past, a structure such as a C.V. joint on front wheel drive vehicles had to be disassembled to replace a damaged boot. Such procedures prove to be both costly and time consuming. Furthermore, boots having cracks, tears or loose clamps or other types of damage may lose lubricant, or allow water or dirt to enter the boot, causing eventual deteriation of the joint. Other procedures have been attempted to replace damaged boots. For example, a boot may be cut down the side and placed over the C.V. joint and glued back together. However, this procedure is difficult to perform because the cut area must be clean and the reglued area must be further supported using extra clamps. The work area is usually greasy and almost impossible to keep clean. Any grease on the cut area of the boot will prevent it from being properly sealed. Any cracks left in the seal will allow dirt and water to enter and the lubricant to leak out.

The boot of the present invention does not require a clean area, and in fact the boot will be sufficiently sealed even if some grease accumulates in the sealing area. Furthermore, the present invention does not require additional clamps to attach it to the joint or the like and by providing truncated conical end portions with cut away portions thereon the invention allows for alterations of the boot to fit structures of varying size. In addition, the present invention may be removed and replaced without disassembling the mechanical unit it covers.

SUMMARY OF THE INVENTION

The present invention provides a split boot formed from a unitary, flexible body shaped to be helically wrapped around a universal joint or the like. Once the flexible body is wrapped around the joint with the mating edges engaged a main body is formed having a generally hollow truncated conical configuration with a corrugated or helical shape. In the preferred embodiment one end of the main body has a smaller circular cross section than the other end. Each end portion of the main body has cutting guide ridges such that the diameter of the aperture in the end may be varied by removing some of the material from the body, to accomodate different sized joints or mechanical units. The corrugations or the helical shape in the main body are diagonally disposed relative to the longitudinal axis of the main body to provide longitudinal flexibility and for providing the recirculation of lubricating oils during rotational movement of the boot with a rotating mechanical unit and to equalize rotational forces on the boot to prevent premature rupture and cracking thereof.

It is an object of the present invention to provide a novel split boot that is easily used and sealingly connects or mates around a universal joint or the like without disassembly of the joint.

It is another object of the present invention to provide a novel split boot having helical overlapping snap sealing means for making it easy to install and remove the boot from a universal joint or the like.

It is a further object of the present invention to provide a novel split boot having a corrugated shape with the corrugations being generally diagonally disposed relative to the longitudinal axis of the boot which facilitates recirculation of the lubricating oil contained therein.

It is an additional object of the present invention to provide a split boot having a sealing means positioned so that the sealing means is not subject to premature cracking, rupturing and opening thereof.

In accordance with these and other objects which will be apparent hereinafter, the instant invention will now be described with particular reference to the accompanying drawings.

BRIEF DESCRIPTION OF THE DRAWINGS

In the drawings

FIG. 1A is a plan view of the split boot of the present invention disassembled;

FIG. 1B is a plan view of the split boot partially assembled;

FIG. 2 is a side view of the split boot of present invention in final sealed and assembled form;

FIG. 3 is a right end view of the split boot of the present invention in final sealed form;

FIG. 4 is a partial cross sectional view of the main body 10 of FIG. 1;

FIG. 5 is an enlarged view of the sealing means of FIG. 4;

FIG. 6 is an illustration of connecting the connecting means on the main body;

FIG. 7 is an illustration of connecting the connecting means on the end portion;

FIG. 8 is an illustration of the split boot in an unconnected configuration.

DESCRIPTION OF THE PREFERRED EMBODIMENT

Referring now to FIGS. 1A, 1B and 2, the split boot 10 covers a mechanical unit such as joint or rotating C.V. joint. The split boot 10 includes a unitary main body portion 12, two end portions 14 and 16, a grooved mating edge 17 and a male mating edge 19 in FIG. 4. The grooved mating edge 17 may be engaged by the male mating edge 19 to form a connecting means 18 in FIGS. 2 and 3. The connecting means is positioned so that centrifugal force from rotation about the center line 24 does not pull male member 19 directly out of female member 17. The boot 10 may be constructed entirely out of Ethylene-Neoprene rubber such as that sold under the trademark VAMAC by DuPont. When the interlocking sealing means 18 is disengaged the entire boot 10 may be laid down in a flat configuration as shown in FIG. 1. This allows the boot to be installed about a structure such as a universal joint, coupling or other type of structure without disassembling the structure.

Referring now to FIG. 2, the body 10 has a main body portion 12 of a generally hollow truncated conical corrugated configuration or helical when assembled. As can be seen the plane of each protruding corrugated

portion 20 and 22 is diagonally disposed relative to the longitudinal axis 24 of the main body 10. (i.e. The plane of each protrusion is not normal to the axis). The corrugated configuration provides for recirculation of the lubricating oil when rotational movement of the universal joint or the like occurs. The oil moves in the screw-like threads. The corrugated configuration also provides for equalization of forces caused by rotational movement of the boot thus preventing premature cracking or rupturing of the boot. In FIG. 3 the size of the corrugated portions are illustrated by numerals 97, 98 and 99.

The main body 12 has a smaller circular top 26 and a larger circular base 28. The two truncated conical end portions 14 and 16 emanating from the circular bases 28 and 26 respectively have circular top openings. The end portions include sizing guides 27, 29 that allow accurate trimming of the boot 10 to specific sizes, such that the one boot will accomodate the needs for most vehicles.

Referring now to FIGS. 4 and 5, the first grooved mating opening or edge 17 and the complementary male mating bulb or edge 19 is shown in the removably engaged position and may be referred to as a connecting means. When the grooved mating edge 17 is not engaged by the male mating edge 19, the edge portions of the main body 10 are separated from each other allowing the main body 10 to be wrapped around a structure without disassembling it. Numeral 100 shows the separation line in FIGS. 2 through 5. The grooved mating edge 17 includes an end portion 34 and a flat portion 38, while the male mating edge 19 includes the end portion 36 and the flat portion 40 all which together form the removable connecting means 17, 19. The male mating edge 19 includes a flange 42 and a bulbus end 44 that fits in the grooved mating edge 17 of a complementary shape. The configuration of the connecting means 17, 19 resists opening forces in the directions shown by the arrows AA', while the material around the bulbous end 42 provides for resistance to opening in the direction of arrow B. The connecting means 17, 19 also provides for periodic non-destructive removal of the boot 10 in FIG. 2 for inspection of the structure thereunder and regreasing if necessary, and rescaling of the boot. The split boot may be made out of rubber or neoprene type material.

The instant invention has been shown and described herein in what is considered to be the most practical and preferred embodiment. It is recognized, however, that departures may be made therefrom within the scope of the invention and that obvious modifications will occur to a person skilled in the art.

What is claimed is:

1. A one piece universal joint boot comprising:

a relatively large hollow body sized in length and width and shaped for encompassing a plurality of universal joints of varying sizes;

said hollow body having a longitudinal body center line;

said hollow body including means for varying the effective length of said hollow body to fit over a plurality of universal joints of varying size;

said hollow body having relatively small conical connecting means at each end of said hollow body;

each said connecting means including opening for universal joint shafts;

said conical connecting means including universal joint shaft diameter ring shaped sizing guides means connected on said connecting means, said sizing guide means for facilitating accurate trimming a portion of said conical connecting means of said boot to accomodate different universal joint shafts.

2. A one piece universal joint boot as set forth in claim 1, wherein:

said means of said hollow body including a corrugated or accordian configuration.

3. A one piece universal joint boot as set forth in claim 2, wherein:

said hollow body is in the form of a three dimensional spiral of at least three hundred and sixty degrees.

4. A one piece universal joint boot as set forth in claim 2, wherein:

said hollow body having an outer edge of a relatively larger diameter in a spiral configuration and a lower edge of a relatively smaller diameter in a spiral configuration to form a conical shaped corrugated or accordian configuration.

5. A one piece universal joint boot as set forth in claim 4, wherein:

said conical shaped corrugated or accordian configuration providing a lubricant moving means for lubricating said universal joint in said universal joint boot.

6. A one piece universal joint boot as set forth in claim 1, wherein:

said joint boot is split longitudinally generally along a spiral line.

7. A one piece universal joint boot as set forth in claim 3, wherein:

said joint boot is split longitudinally generally along a spiral line.

8. A one piece universal joint boot as set forth in claim 5, wherein:

said joint boot is split longitudinally generally along a spiral line.

9. A one piece universal joint boot comprising:

a relatively large hollow body sized in length and width and shaped for encompassing a plurality of universal joints of varying sizes;

said hollow body including a spirally positioned releasable line connector means for connecting said hollow body into a boot and for disconnecting said hollow body to provide a flat configuration, said connector means alllowing said boot to be connected over a universal joint without first disconnecting said universal joint;

said hollow body generally conical in shape when said connecting means are connected together;

said hollow body having a longitudinal body center line;

said hollow body including means for varying the effective length of said hollow body to fit over a plurality of universal joints of varying size;

said hollow body having relatively small conical connecting means at each end of said hollow body;

each said connecting means including opening for universal joint shafts;

said conical connecting means including universal joint shaft diameter ring shaped sizing guides means connected on said connecting means, said sizing guide means for facilitating accurate trimming a portion of said conical connecting means of said boot to accomodate different universal joint shafts;

said connecting means including:

a first mating portion integral one edge of said hollow body;

a second mating portion integral the other edge of said hollow body;

said second mating portion non-destructively, removably engageable with said second mating portion whereby said boot is formed.

10. A one piece universal joint as set forth in claim 9, wherein:

said first mating portion includes a substantially longitudinal slot with a substantially circular-shaped groove therein;

said second mating portion includes a bulbous protruding portion sized and shaped for engagement with said substantially circular-shaped groove.

11. A one piece universal joint as set forth in claim 10, wherein:

said second mating portion engages said first mating portion in a direction normal to the plane of each protruding portion of said corrugated portion whereby separation of said connecting means is prevented during rotation of said boot.

* * * * *

UNITED STATES PATENT AND TRADEMARK OFFICE

CERTIFICATE OF CORRECTION

PATENT NO. : 4,676,513

DATED : 6/30/87

INVENTOR(S) : Del V. Tiegs and Randy G. Tiegs

It is certified that error appears in the above-identified patent and that said Letters Patent is hereby corrected as shown below:

Claim 9, Column 4, Line 49, "connecting" should be --connector--.

Claim 9, Column 4, Line 61, after "on said" insert --conical--.

Claim 9, Column 4, Line 66, "connecting" should be --connector--.

Claim 9, Column 5, Line 4, "second" should be --first--.

Claim 11, Column 6, Line 9, "connecting" should be --connector--.

This certificate supersedes Certificate of Correction issued August 30, 1988,

Signed and Sealed this

Twenty-seventh Day of September, 1988

Attest:

DONALD J. QUIGG

Attesting Officer *Commissioner of Patents and Trademarks*

UNITED STATES PATENT AND TRADEMARK OFFICE

CERTIFICATE OF CORRECTION

PATENT NO. : 4,676,513

DATED : 6/30/87

INVENTOR(S) : Del V. Tiegs and Randy G. Tiegs

It is certified that error appears in the above-identified patent and that said Letters Patent is hereby corrected as shown below:

Claim 9, Column 4, Line 49, "connecting" should be --connector--.

Claim 9, Column 4, Line 57, "connecting" should be -- connector--.

Claim 9, Column 4, Line 61, after "on said" insert --conical--.

Claim 9, Column 4, Line 66, "connecting" should be --connector--.

Claim 9, Column 5, Line 4, "second" should be --first--.

Claim 11, Column 6, Line 9, "connecting" should be--connector--.

Signed and Sealed this

Thirtieth Day of August, 1988

Attest:

DONALD J. QUIGG

Attesting Officer

Commissioner of Patents and Trademarks

United States Patent [19]

Leeland

[11] **Patent Number: 4,730,421**

[45] **Date of Patent: Mar. 15, 1988**

[54] **PITCH BOX**

[76] Inventor: **David F. Leeland**, R.D. 1, Box 150, Denver, Pa. 17517

[21] Appl. No.: **943,604**

[22] Filed: **Dec. 18, 1986**

[51] **Int. Cl.**[4] **E04D 1/36**

[52] **U.S. Cl.** **52/58; 52/219; 285/42; 98/82**

[58] **Field of Search** 52/58–62, 52/218, 219; 285/42–44; 126/314–319; 98/82

[56] **References Cited**

U.S. PATENT DOCUMENTS

183,300	10/1876	Harmon	98/60
288,535	11/1883	Williams	52/199
1,263,789	4/1918	Morrison	285/42
1,278,120	9/1918	Donnelly	285/44
1,442,172	1/1923	Nelson .	
3,461,625	8/1969	Sandow	52/58
3,708,185	1/1973	Bilicki et al.	285/42
3,871,145	3/1975	Hatmaker	52/60
4,010,578	3/1977	Logsdon	52/58
4,211,423	7/1980	Resech	277/212
4,265,058	5/1981	Logsdon	52/58
4,333,660	6/1982	Cupit	277/9
4,386,488	6/1983	Gibbs	52/199

FOREIGN PATENT DOCUMENTS

814868	6/1959	United Kingdom	98/82
930921	7/1963	United Kingdom	52/58

Primary Examiner—James L. Ridgill, Jr.

Attorney, Agent, or Firm—Dann, Dorfman, Herrell and Skillman

[57] **ABSTRACT**

A pitch box for sealing the junction between an upright elongated projection and the opening where it penetrates into the surface of a roof. The pitch box has a central tubular part which has a base adapted to be mounted against the roof surface surrounding the projection and adapted to extend upwardly generally coaxial with the longitudinal axis of the projection to provide a space surrounding the extension for receiving anchoring material. A collar surrounds the upper end of the tubular part and a bottom wall is provided between the bottom of the collar and a median point on the tubular part so that a trough is formed surrounding the upper end of the tubular part. The bottom of the trough has weep holes in it for discharging moisture. The top of the collar extends above the top of the tubular part. A porous material may be used to fill the bottom of the trough and the top of the collar is filled with tar or other sealant material which can be mounded up around the projection which extends upwardly through the pitch box.

10 Claims, 4 Drawing Figures

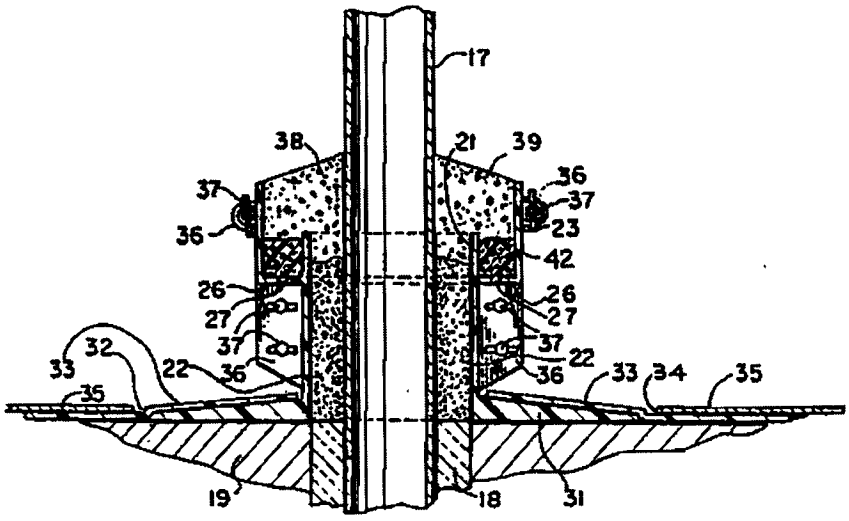

FIG. 1

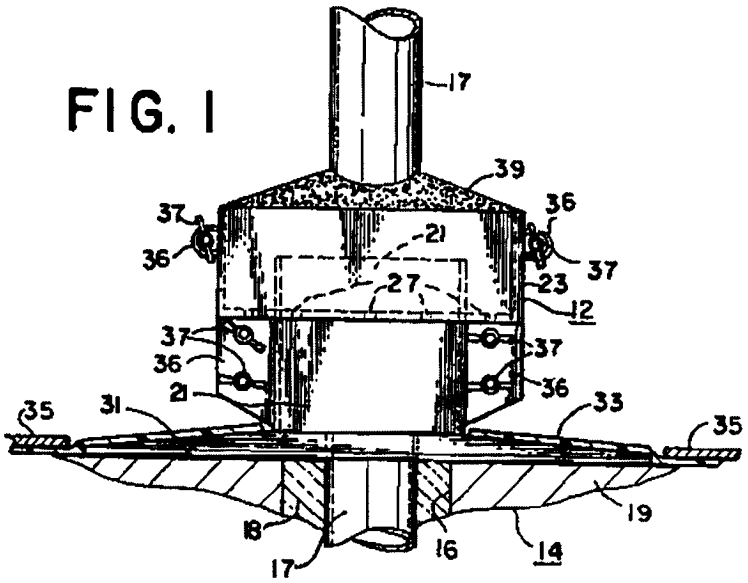
17
39
37
36
21
36
37
27
23
12
37
37
36
36
21
35
31
33
35
19
18
16
14
17

FIG. 2

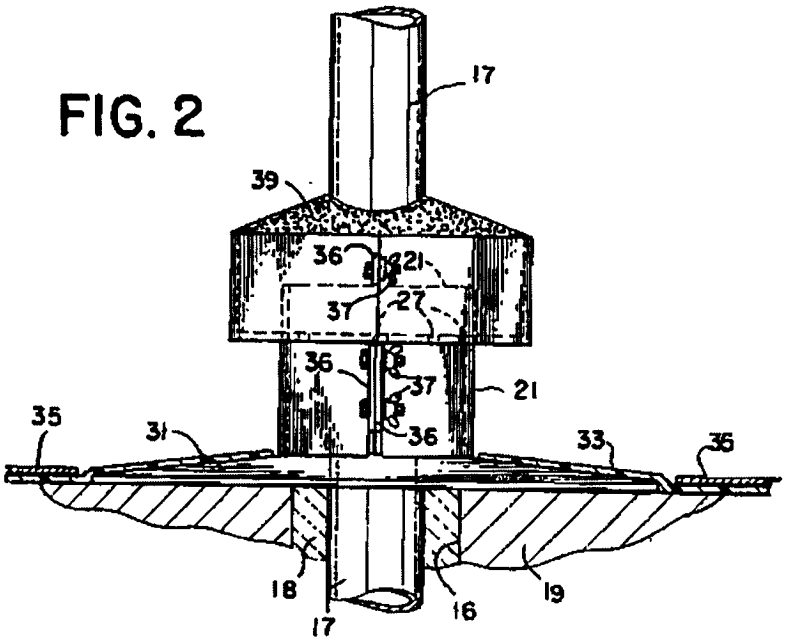
17
39
36
21
37
27
36
37
21
35
31
36
33
35
18
19
16
17

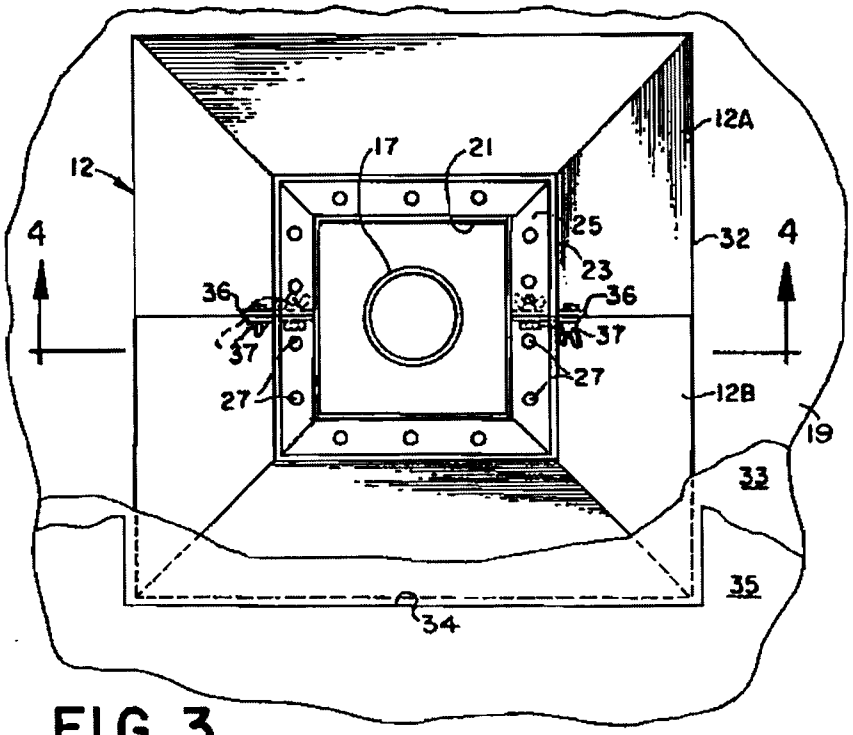
12
12A
17
21
25
23
32
4
4
36
36
37
37
27
27
12B
19
33
35
34

FIG. 3

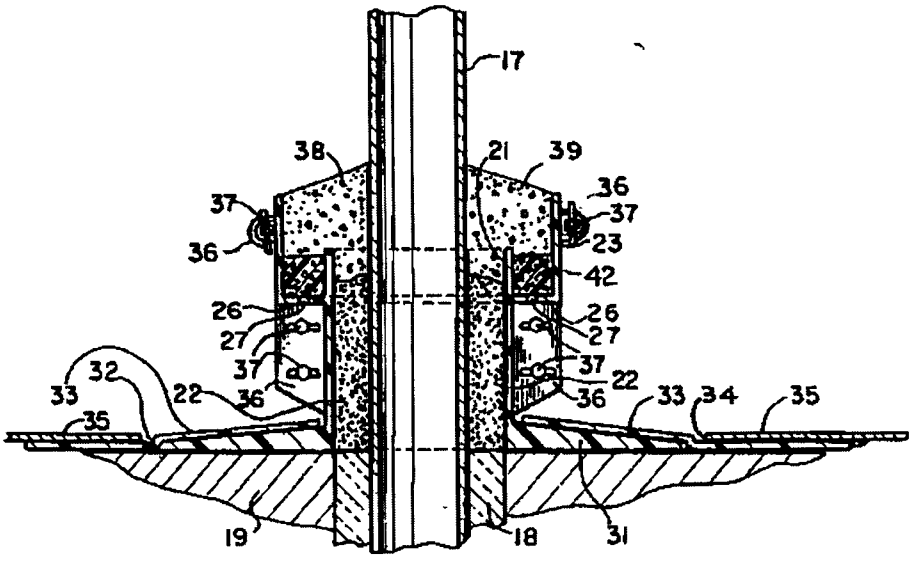
17
38
21
39
36
37
37
36
23
42
26
26
27
27
37
37
22
36
36
33
32
22
33
34
35
35
19
18
31

FIG. 4

PITCH BOX

FIELD OF THE INVENTION

The field of the invention relates to roof construction, and has particular application to apparatus for use in making a seal around a pipe or other projection penetrating the roof surface.

BACKGROUND OF THE INVENTION

In the construction of roofs, it is common practice to use flashing components around the perimeter of the roof, and particularly where the roof meets a vertical wall. Where the wall is planar, there is little difficulty in installing flashing which bridges any gap which might exist between the upstanding wall and the roof surface. Where there is a projection through an opening in the roof surface within the perimeter, for example when a vent pipe or air-conditioning conduit penetrates the roof surface, there is difficulty in providing a long-lasting seal between the projecting element and the roof surface, particularly where the projecting element is round or is of irregular contour.

DESCRIPTION OF THE PRIOR ART

Prior to the present invention, the common practice for sealing such projections consists of erecting a dam in spaced relation surrounding the projection and filling up the space between the dam and the projection with pitch or tar so as to effect a weather-proof seal between the roof surface and the projecting element. In many cases, the dam is provided by a pitch box which consists of a ring, circlet, or or other annulus adapted to be mounted on the roof surface with an upstanding wall to provide an annular receiving space surrounding the projection and overlying the opening. In order to firmly anchor the pitch box in place, a thick layer of mortar is deposited within the annulus at the roof level to firmly anchor the pitch box in place and above the mortar, pitch or tar is deposited within the annulus and is mounded up in the center toward the projection so that water running down the projection above the pitch box is deflected away from the surface of the projection.

After a time, the pitch in the pitch box tends to shrink and provide a degree of clearance between the pitch and the pitch box or else between the pitch and the projection. The clearance provides one or more small passages which attract water and permit it to penetrate into the pitch box below the tar and work its way into the opening in the roof structure where the projection penetrates. After a period, the passages may permit a substantial accumulation of moisture surrounding the projection in the opening and on the undersurface of the roof which may manifest itself as leakage into the building.

In an attempt to overcome the problem, gasketing material has been used to effect a seal either between the projection and the pitch box or else between the pitch box and the roof, or both. While effective in the short run, exposure to the elements over a period of time deteriorates the gasketing material and it loses its effectiveness. Furthermore, gasketing is expensive, particularly where the projection is of irregular contour.

SUMMARY OF THE INVENTION

The present invention provides an improved pitch box which enables the roof to be constructed using conventional tools and procedures and yet which provides an improved seal between the roof surface and an element projecting from an opening in the roof surface.

More specifically, the present invention provides an improved pitch box having a configuration which avoids the ill effect of leakage between the pitch and the box which may occur after a period of use.

Even more specifically the present invention provides a pitch box which is designed to divert any leakage which may occur into the pitch box away from the roof opening which the projecting element penetrates.

The preferred embodiment of the invention includes a recessed trough portion in the pitch box spaced outwardly from the projecting element and having weep holes in the bottom thereof so that any leakage within the pitch box is received in the trough and is discharged through the weep holes onto the roof surface for dissipation.

BRIEF DESCRIPTION OF THE DRAWINGS

A preferred embodiment of the present invention is illustrated in the accompanying drawings, wherein:

FIG. 1 is a side elevational view of a pitch box installed on a flat roof, the roof being shown in section;

FIG. 2 is a plan view of the pitch box of FIG. 1 with the flashing and the roofing membrane broken away;

FIG. 3 is a plan view of the pitch box shown in FIGS. 1 and 2, but with the filler material and the sealant removed for the purpose of illustrating the interior construction of the box; and

FIG. 4 is a sectional view taken along the line 4—4 of FIG. 3.

DESCRIPTION OF A PREFERRED EMBODIMENT

With reference to the drawing, FIG. 1 illustrates a pitch box 12 made in accordance with the present invention applied to a roof 14 of substantially standard construction. The roof has an opening 16 through which a projection, in the present instance a vent pipe 17, penetrates. In accordance with the usual practice, insulation material 18 is stuffed into the opening 16 between the walls of the opening and the pipe 17. The body of the roof 14 may be of any suitable construction providing a flat surface 19 immediately surrounding the opening 16 on which the pitch box 12 may be mounted.

As shown in the drawings, the pitch box 12 is annular in form having a square tubular core 21 extending from its lower limit upwardly a substantial distance. The core 21 has a hollow center which is sufficiently larger than the diameter of the vent pipe 17 to accommodate filler material 22 between the core 21 and the vent pipe 17.

At the upper end, the pitch box is provided with an annular collar 23 spaced radially outward from the core 21 and overlapping the upper marginal end of the core 21. Preferably, the collar 23 comprises a hollow square which is coaxial with the core 21 and with the vent pipe 17 so as to provide a peripheral annular channel or trough 25 between the core 21 and the collar 23. A bottom wall 26 is provided to define the lower limit of the channel 25 and extends from the bottom of the collar inwardly to meet the core 21 at a position spaced below its upper end. As set forth more fully hereinafter, the bottom wall 26 is preferably horizontal and has a series of weep holes 27 positioned along the lowest part therein.

At its base, the core 21 merges into an outwardly-annular base or flange portion 31 having a flat portion

adapted to bear against the upper surface of the roof structure 19 to support the core portion 21 with its central axis disposed vertically, coaxial with the axial center line of the pipe 17. The central axis of the tubular core portion 21 is set at an angle to the bottom of the base 31 which corresponds to the angle which the axis of the projection 17 makes with the surface of the roof 19. As shown, the thickness of the base flange portion 31 tapers from a substantial thickness adjacent the core 21 to an edge 32 at its outer perimeter which is formed by the upper surface meeting the lower surface at an acute angle. In order to bridge any clearance gap between the base 31 and the roof structure 19, a sheet flashing material 33 is secured to the upper surface of the base 33 and extends past the edge 32 onto the upper surface of the roof structure 19. The sheet material may be elastomeric and cemented in place, or may be formed otherwise to assure a substantially water-tight joint between the base 31 and the roof 19. The roof 19 may include a roofing membrane 35 (not shown in FIG. 2) which overlies the flashing 33. Preferably, the roofing membrane has a cutout 34 to accommodate the pitch box so that the periphery of the cutout registers closely with the edge 32 of the base portion 31.

In order to facilitate manufacture of the pitch box and mounting of the pitch on the roof around the projection, the box 12 is preferably molded in complementary parts 12A and 12B. When engaged face to face, the two parts form the annular pitch box structure 12. Each part is provided with diametrically-opposite mating flanges or ears 36, 36 having apertures therein adapted to register to accommodate fasteners 37 which may be tightened and released to assemble and disassemble the pitch box in position around the vent pipe 17 prior to final installation. The plastic material of which the box is molded is weather-resistant when set, and is not subject to degradation due to exposure to sunlight, heat, cold, rain, snow, and the like.

When the pitch box 12 is assembled, and mounted in place, filler material 22 is positioned into the space between the vent pipe 17 and the tubular part 21 of the pitch box, and as shown in FIG. 4, is preferably poured in place and allowed to set. Roof mortar is a suitable filler material to use to anchor the pitch box in place around the vent pipe. Preferably, the anchoring material is filled to a level below the top of the tubular part 21 so as to expose the upper terminal edge of the tubular part in the space within the collar 23.

When the anchor material is in place, the space above the material 22 is filled with tar, pitch or another suitable pourable viscous waterproof material which sheds water and may adhere to the material of the pitch box and to the material of the vent pipe. Roofing tar is a suitable material and as shown in FIG. 4, the roofing tar 38 is mounded up above the top of the collar 23 to provide a run-off surface 39 extending downwardly from the vent pipe to the top of the collar 23. Thus, moisture which may accumulate by condensation or by precipitation on the vent pipe 17 may run down the pipe until it engages the surface 39 which then deflects the moisture to cause it to run to the outside of the collar 23 of the pitch box where it may run down and drip onto the flashing 33 and be dissipated on the roof surface.

In use, after a prolonged period of installation, it is not unlikely that the tar filler 38 may shrink and separate from the interior wall of the pitch box collar 23 allowing moisture running down the surface 39 to enter the space between the tar 38 and the collar 23. Any moisture entering this space will then enter the trough 25 and may travel down to the bottom of the trough to the weep holes 27 which afford discharge of the accumulated moisture through the weep holes onto the upper surface of the flashing 33 where it may then be dissipated over the roof. The upper terminal end of the tubular part 21 serves as a barrier against the moisture travelling into the interior of the tube 21 where it may adversely affect the anchor material 22 or the insulation 18.

It is preferable to fill the bottom of the trough with a closed-cell porous material 42 to facilitate the passage of any accumulated moisture within the trough outwardly through the weep holes. The use of a closed-cell material at the bottom of the trough assures gravity flow of moisture to the bottom of the trough where it may be discharged through the weep holes, and reduces the likelihood of moisture flowing up the tubular wall 21 by surface tension or capillary action and entering the clearance space between the pipe 17 and the tubular part 21. The material 42 also prevents clogging of the weep holes 27, so that the material 42 does not adversely affect the capability of the sealing material 38 to prevent leakage downwardly through the pitch box.

In order to enhance the protection of the anchor material 22 and the insulation 18, the parts 12A and 12B are preferably cemented together along their junction line and the base 31 is cemented and fastened with screws to the roof structure 19.

As is apparent from the foregoing description and the drawings, the present invention permits the vent pipe 17 to be sealed within the opening 16 regardless of the condition of its outer periphery. For example, if the vent pipe is of irregular outline, or has been dented or damaged, the anchor material 22 and the sealing material 38 accommodate to such irregularities to ensure against leakage between the vent pipe and the surrounding material.

Although a particular embodiment of the present invention has been herein illustrated and described, it is not intended to limit the invention to such disclosure, but changes and modifications may be made therein and thereto within the scope of the following claims.

What is claimed :

1. For constructing and repairing roofs, in combination with a roof having an opening and a projecting element penetrating into said opening, a pitch box for sealing the junction between said element and said opening comprising:

a tubular body surrounding said projecting element and said opening with clearance between the outer surface of said element and the inside surface of said tubular body;

said body having an upright axis and terminating at its lower end in a base bearing flush against said roof surface around said opening, and terminating at its upper end in a free marginal end portion; and

a collar surrounding said free marginal end portion in radially spaced relation thereto to provide an annular trough between said free marginal end portion of said body and said collar, said trough having a bottom wall means spaced above said base and below the upper end of said body, said wall means having a plurality of weep holes affording discharge of moisture from said trough through said weep holes, said collar extending above the level of said upper end of the tubular body so as to accommodate a waterproof sealant material extending

from the interior surface of said collar to the exterior surface of said projecting element above the upper end of said tubular body.

2. A pitch box combination according to claim 1 wherein said tubular body and said collar are square in cross section.

3. A pitch box combination according to claim 1 wherein said pitch box is separated along a plane including its upright axis into two parts, and including means to fasten said two parts together around said projection.

4. A pitch box combination according to claim 1 wherein said base comprises a flange portion projecting outwardly from said body at its lower end, said flange having a planar undersurface to bear flush against said roof surface, said flange tapering in thickness toward its outer perimeter, and terminating in an acute angular edge along said perimeter.

5. A roof assembly comprising a combination according to claim 1, including an anchoring material filling the clearance between the outer surface of said element and the inside surface of said tubular body, means overlying the bottom wall means of said trough to afford flow passages for moisture through said weep holes, and a sealant material overlying said anchor material and filling the space between the inside of the collar and the outside of said projecting element and being mounted up around the projecting element to provide a moisture-run-off surface directing moisture away from said projecting element toward said collar.

6. A roof assembly according to claim 5 wherein said base comprises a flange portion projecting outwardly from said body at its lower end and terminating in an edge about its periphery, the underside of said flange bearing flush against said roof surface, said assembly including flashing overlying the roof surface beyond said edge and overlying the flange about its periphery, and a roofing membrane having a cut-out conforming to the periphery of said flange and surrounding the same in a position overlying said flashing.

7. A roof assembly according to claim 5 wherein said means overlying said bottom wall means comprises a porous material filling the bottom of the trough, said sealant material overlying said porous material within said trough, said porous material causing said sealant material to be spaced above said weep holes.

8. A roof assembly according to claim 5 wherein said free marginal end portion of said tubular body extends a preselected distance above said bottom wall means, said porous material having a depth less than said preselected distance.

9. A roof assembly according to claim 8 wherein said anchor material comprises roof mortar partially filling the interior of said tubular member and extending from the roof opening upwardly to a level below the marginal end portion of said tubular body, whereby said sealant material encases said marginal end portion above said porous material on the outer surface and above said anchor material on the inner surface.

10. A pitch box comprising a molded structure formed of a plastic material which is weather resistant when set and is not subject to degradation due to exposure to sunlight, heat, cold, snow and the like, and said structure comprising an upright tubular body having a base at its bottom with a flange projecting outwardly therefrom, a bottom wall projecting outwardly from said tubular body above said base and flange and below the top of the tubular body and extending to its outer perimeter, and a collar extending upwardly from the outer perimeter of said bottom wall a distance to a height above the top of the tubular body, said bottom wall having perforations within said outer perimeter overlying said flange between said tubular body and said collar.

* * * * *

United States Patent [19]

Orth

[11] **Patent Number: 4,937,991**

[45] **Date of Patent: Jul. 3, 1990**

[54] **FLASHING UNIT FOR SEALING ROOF PENETRATIONS**

[76] Inventor: Michael J. Orth, 1375 NE. 134 St., N. Miami, Fla. 33161

[21] Appl. No.: 345,700

[22] Filed: May 1, 1989

[51] Int. Cl.[5] E04B 7/00

[52] U.S. Cl. 52/199; 52/60; 52/219; 285/42; 138/157

[58] Field of Search 52/60, 199, 219, 218, 52/574; 285/42; 98/42.22; 138/157

[56] **References Cited**

U.S. PATENT DOCUMENTS

256,060	4/1882	Seagrave et al.	138/157
775,562	11/1904	Golliek	138/157 X
1,399,748	12/1921	Cheney	285/42 X
3,363,369	10/1965	Miller	52/60
4,570,396	2/1986	Struber	52/199 X

Primary Examiner—Carl D. Friedman
Assistant Examiner—Linda J. Hoffert

[57] **ABSTRACT**

An improved flashing unit for use in weatherproofing a roof penetration including complimentary mating half portions of generally regid, high-strength sheet material, each half portion comprising a base plate, a generally semi-cylindrical stack portion attached to and extending upwardly from the base plate, each base plate having an upwardly directed generally semi-cylindrical flanged edge disposed within the lower end of each semi-cylindrical stack portion, a longitudinal edge portion of each stack portion forming an elongated continuous channel for receipt of a corresponding smooth longitudinal edge of the opposite stack portion for snap-fit frictional retention of the two stack portions when mated with the edge portions of the base plates in abutment, lap plates attached to abutting edge portions of the base plates to be received in lapping relation with an abutting side edge portion of the opposing base plate, and a generally cylindrical counterflashing, or cap, for surrounding a roof penetration and receiving the upper end portion of the mated stack portions in radially inwardly spaced relation therefrom. The flashing unit may also serve as a roof vent.

7 Claims, 2 Drawing Sheets

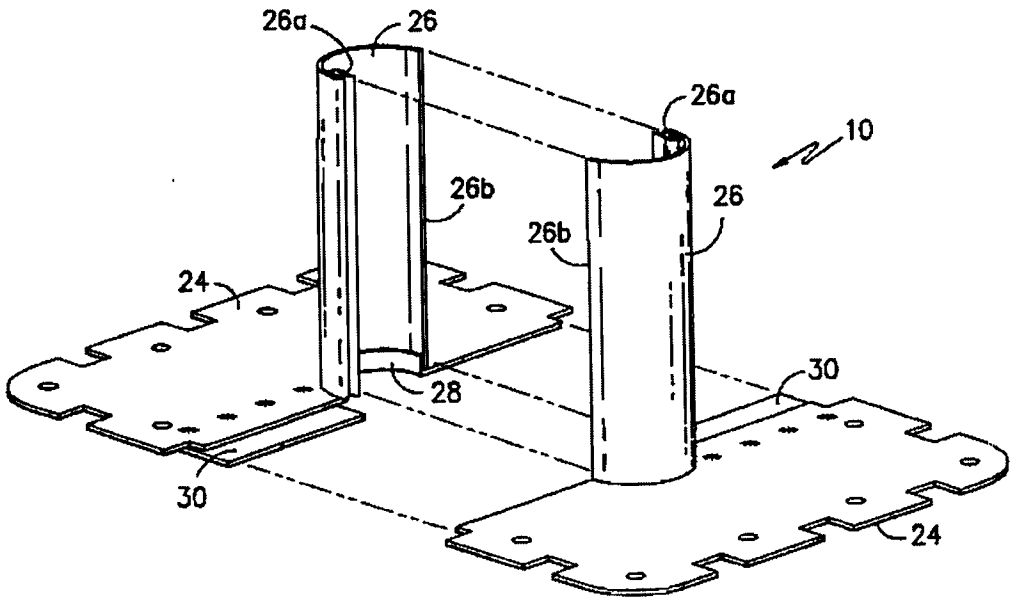

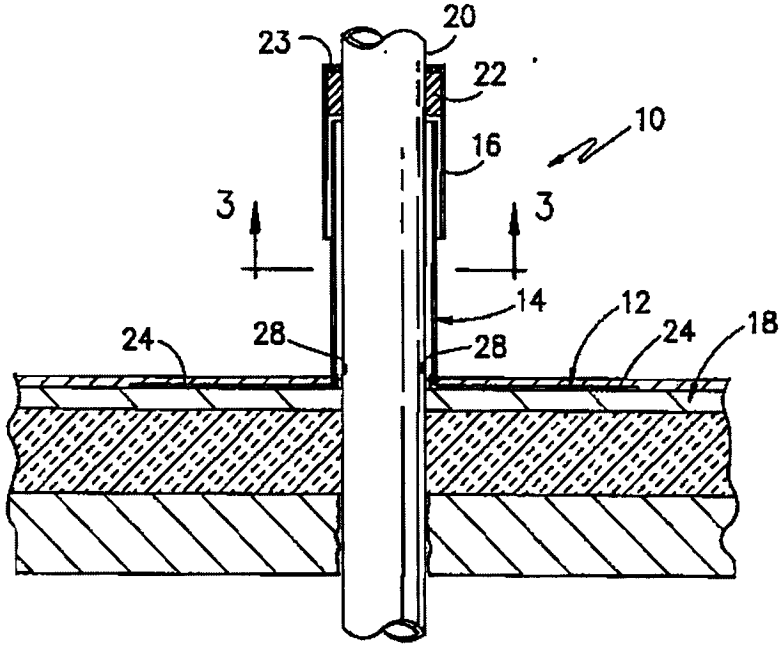
20
23
22
10
16
3
3
14
12
24
28
28
24
18

FIG. -1-

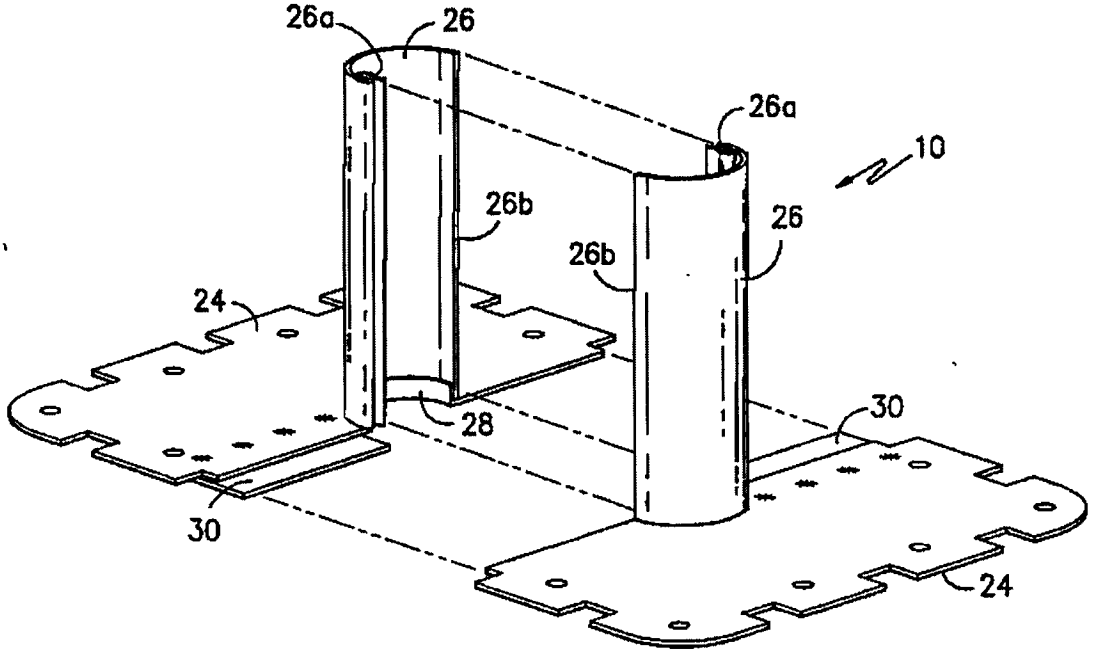
26a
26
26a
10
26b
26
26b
24
28
30
30
24

FIG. -2-

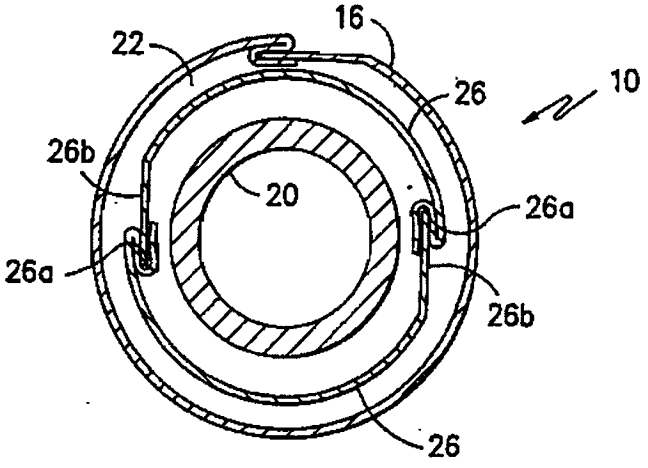

FIG. -3-

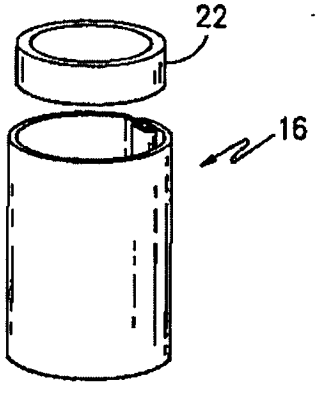

FIG. -4-

FLASHING UNIT FOR SEALING ROOF PENETRATIONS

The present invention is directed to a flashing unit for use to weatherproof pipes and other penetrations through a building roof, and, more particularly, to a flashing unit to weatherproof roof penetrations which may be mass-prefabricated at a manufacturing location, delivered to a construction site, and quickly and easily installed in a building construction by construction personnel.

BACKGROUND OF THE INVENTION

Flashing is widely employed in the building industry to weatherproof building roof constructions at their various juncture points with other components, such as vertical walls, and around roof penetrations, such as pipes, support beams, support rods, and the like, which extend through the roof.

Flashing for pipes and other roof penetrations typically are composed of thin sheet metal, which is cut and formed into the desired shape by construction workers at the building site, and fitted about the roof penetration to seal the opening of the roof between the penetration and the roof. For flat roofs, the flashing typically may consist of a base plate of sheet metal having a central opening. The base plate lies flat on and surrounds the opening in the roof. An upstanding, cylindrical hollow sleeve, or stack, surrounds the base plate opening, is secured thereto, and projects upwardly a distance above the roof line in surrounding relation to the pipe penetrating the roof. The stack is spaced outwardly from the pipe penetration a sufficient distance to permit relative movement between the penetration and roof construction. A cap, or counter flashing, is mounted in water-tight surrounding relation on the roof penetration, and overlies the upper end of the flashing stack to provide a weatherproof cover for the upper end of the stack.

Generally, in such sheet metal flashing constructions, the base plate is split to its central opening to facilitate its placement about the roof penetration, and the stack of the flashing is formed of a single flexible sheet of metal which is bent around the roof penetration into a cylindrical shape and soldered along its longitudinal seam to seal the same. The lower end of the stack is soldered to base plate and tabs located around its central opening. The counterflashing, or cap, of the flashing unit is generally a longitudinally split hollow sleeve of sheet metal of larger diameter than the stack, and is opened to encircle the protrusion and the upper end of the flashing stack. The counter flashing is secured to the roof penetration by suitable means, such as an internal gasket, sealant, and clamps.

In fabricating sheet metal flashings on site, even though architecturally specified, construction workers often may be inexperienced in properly sizing, cutting, and shaping the sheet metal stock material to the proper dimensions to effectively seal piping and other penetrations through the roof of the building. In addition, on-site flashing construction and fabrication results in increased labor and time for construction personnel.

It is also known to employ prefabricated flashing units made of a rigid plastic with an elastomeric covering material. One such prefabricated flashing unit is disclosed in U. S. Pat. No. 4,211,423, and consists of a multipart generally cylindrical unit with base flange and boot or cap of varying diameter stack, which may be height cut to provide a desired diameter to accommodate pipe of corresponding diameter. As disclosed in the patent, the roof seal device appears to be composed of multiple inner and outer sections which must be precisely aligned and secured with clamps and adhesively sealed at overlapping elastomeric portions resulting in what would appear to be a labor-intensive installation.

Prefabricated plastic flashings are also known which consist of a flexible longitudinally split generally cylindrical sleeve which is distorted to be brought around a roof penetration and thereafter secured along the split by screws and suitable clamping means.

It is generally believed that plastic and rubber flashing units have less resistance to UV light and weathering during use, and do not have the durability and use life of the sheet metal flashings.

BRIEF OBJECTS OF THE PRESENT INVENTION

It is an object of the present invention to provide an improved flashing unit to effectively weatherproof penetrations through building constructions, particularly pipe and other penetrations through the roof of a building.

It is another object to provide an improved flashing unit for weatherproofing penetrations through building roofs which also serves as a roof vent for air passage therethrough.

It is a further object to provide a flashing unit of relatively simplified construction which may be mass prefabricated at an off-site manufacturing location, economically delivered, and easily and quickly installed by construction personnel to weatherproof openings around roof penetrations of a building.

It is a more specific object to provide an improved light-weight, sheet metal flashing unit which may be prefabricated at an off-site location, and readily snap-fit installed around existing roof penetrations, such as pipes, by construction personnel to effectively weatherproof the roof openings around the same.

BRIEF DESCRIPTION OF THE DRAWINGS

The above, as well as other objects of the present invention, will become more apparent, and the invention will be better understood, from a detailed description of preferred embodiments thereof, when taken together with accompanying drawings, in which:

FIG. 1 is a sectional elevation view of an improved flashing unit of the present invention, showing it in relation to its installation in a roof construction to weatherproof a penetration therethrough;

FIG. 2 is an enlarged exploded perspective view of the base plate and stack portions of the flashing unit of FIG. 1, showing the component parts thereof in separated relation to better illustrate the construction and assembly of the component parts thereof;

FIG. 3 an enlarged horizontal cross-sectional view of a portion of the stack of the unit, taken generally along line 111—111 of FIG. 1, and looking in the direction of the arrows; and

FIG. 4 an exploded view of counterflashing employed as a cap for the stack of the flashing unit of FIG. 1.

DETAILED DESCRIPTION OF PREFERRED EMBODIMENTS

Referring more particularly to the drawings, the improved flashing unit 10 of the present invention employed for sealing penetrations through building constructions, particularly pipe and other protrusions through the flat roof of a building, generally includes a support base 12 of generally rectangular, e.g., square, shape having radial corners, an up-standing stack 14, and a counter flashing, or cap, 16. As seen in FIG. 1, the support base 12 is placed in supporting contact on a horizontal surface portion of a roof structure 18 to which the flashing is to be attached, and the stack 14 surrounds a roof protrusion, or pipe 20, in spaced relation thereto, to permit relative movement between the pipe 20 and the roof structure 18. Surrounding an upper portion of the pipe 20, and sealingly secured thereto by a suitable flexible gasket 22 and sealing material 23, is the short, cylindrical counterflashing, or cap 16, which has an internal diameter greater than the external diameter of the stack 14. The lower end of cap 16 surrounds the upper end of stack 14 in radially outward spaced relation therefrom and provides a weatherproof cover to prevent rain water and other material from falling into the open space between the interior diameter of the stack 14 and the outer diameter of the pipe 20.

As best shown in FIG. 2, the flashing unit of the present invention, in its pre-installed configuration, includes two prefabricated complementary halves, each comprising a base plate portion 24 and a generally semi-cylindrical up-standing stack portion 26, formed of a suitable material, preferably a thin sheet of stainless steel.

The base plate portions 24 are provided with a central semi-circular edge portion along their opposed side edges. Each semi-circular edge has an up-turned, short, semi-cylindrical flanged edge 28 which may be suitably formed thereon, as by metal deforming of the base plate. Preferably, the flange of the two base plate halves may be formed by mandrel deformation of an opening through a single sheet of metal, which is then cut to form the two base plate halves.

Each semi-cylindrical stack portion 26 of the unit surrounds and is attached to the base plate portion 24 and its up-standing flange 28, as by spot-welding in the prefabricating operation. As seen in FIGS. 2 and 3, one full longitudinal edge of each semi-cylindrical stack portion 26 is bent by suitable sheet metal shaping equipment to form an elongated channel 26*a* for frictional receipt of an opposite, straight longitudinal edge 26*b* of the opposing stack portion when the two halves of the unit are snap-fit together to surround a roof penetration, e.g., pipe 20, at the building site location. The two halves of the stack are thus effectively secured together along their opposite longitudinal side edges, when the unit is installed.

Referring to FIG. 2, the abutting edges of the base plate portions 24 are provided with lap plate sections 30. As shown, one side edge portion of the abutting edges of each base plate portion 24 is provided with a short lap plate 30 which may be spot-welded to the underside of the base plate portions, so that the two lap plates 30 underlap the opposing side edge of the opposite base plate portion when the two halves of the unit are installed about the roof projection.

As best seen in FIG. 4, the counterflashing 24 for the unit of the present invention may be composed of a suitable material, such as thin sheet metal which is formed with a longitudinal channel along one side edge, rolled into a hollow cylinder and secured along its edges, as by soldering or the like. Gasket 22 of suitable material, such as a self-adhering, 1" wide closed cell foam, may be placed on the pipe 20¼" to 3/16" above the top of stack 14 and the counterflashing, or cap 16, located therearound. The top of the counterflashing 16 is located approximately ¼" to 3/7" above the top edge of the gasket to form an open top pocket into which a sealant material 23, such as a gunable grade single part urethane sealant, may be applied in on-site installation. As seen in FIG. 1, the unit, when installed, is placed in closely surrounding relation with a roof opening on the roof support surface, with the counterflashing 16 being secured in sealing engagement directly to a penetration through the roof.

The prefabricated half sections of the present invention may be readily snap-fit around roof protrusions during installation, without the need for bending or deforming the halves of the base plate or stack during installation. It can be appreciated that the base plate may be of substantial horizontal dimension to insure full cover of the roof for a considerable distance away from the roof opening through which the penetration extends, thereby providing improved weatherproof seal and structural support of the stack of the unit on the roof support of the building.

Typically, the prefabricated flashing unit of the present invention may be readily assembled at a central off-site manufacturing location, with the semi-cylindrical stack portions 14 spot-welded to their respective base plate flange portions 28, thus providing a base and stack of two-piece prefabricated construction. The counterflashing 16 may be formed of a single split-cylinder of sheet metal, opened to surround the upper portion of the stack and roof protrusion, and thereafter soldered or sealed at the juncture of the edges of the cap 16. The longitudinal seams and the bottom edges of the stack portions 14 may be soldered after assembly on site to seal the seams and the bottom edges to the base plates. The sheet metal base plates may be coated or laminated with a suitable material or substance compatible with the applied roof membrane surface or composition to facilitate seal of the same thereto, e.g., polyvinyl chloride.

Another important feature of the flashing unit construction of the present invention is that it may serve as a roof vent, as well as weatherproof a roof penetration of a building. As seen in FIG. 1, the counterflashing or cap 16 of the flashing unit surrounds the upper portion of stack 14 radially outward and vertically upward spaced relation of the stack to provide a passageway for air flow and venting of the roof, allowing moisture from the roof substrate to vent between the stack and the counterflashing. This construction effectively reduces the number of conventional roof vents which otherwise might be required for the building.

As can be appreciated, the size of the flashing units of the present invention will vary in diameter to accommodate the particular size roof penetrations to be sealed. A typical prefabrication may be formed with a cylindrical stack about 9" high. The base plate and flange portions may be formed by cutting a hole in the center of a single piece of sheet metal ¼" smaller than the stack diameter and extruding the peripheral edges of the hole ¼" upward at a 90° angle to match the internal diameter of the stack. The sheet is then cut into equal

halves to form the two portions 24. The base plates preferably are dimensioned to extend horizontally at least about 4" from the stack in all directions with 1½" radial corners. The counterflashing, or cap, is preferably a minimum of 5" high with about 3¾" overlap of the stack flashing. The stack may be sized to fit individual pipe or other roof penetrations with a ⅛" minimum clearance in any direction for movement. The flashing sheet material preferably is formed of stainless steel, such as a Type 304-2B-26 gauge (0.018 in.) ASTM A167, Fed. Spec. QQ-S-766.

Although it is preferred that the flashing unit of the present invention be constructed of a durable, thin, sheet metal material, such as stainless steel, it may be constructed of a suitable rigid high-strength plastic.

That which is claimed is:

1. An improved prefabricated flashing unit for use in weatherproofing roof penetrations including a pair of complementary mating half portions of generally rigid, high-strength sheet material, each half portion comprising a base plate and generally semi-cylindrical stack portion attached to and extending upwardly from an edge portion of each base plate, each base plate having an upwardly directed generally semi-cylindrical flanged edge disposed within the lower end of each semi-cylindrical stack portion in engagement with the lower edge portion of the stack portion, means securing each stack portion to its base plate, one longitudinal edge portion of each stack portion forming an elongated continuous channel for receipt of the corresponding smooth longitudinal edge of the opposite stack portion to provide snap-fit frictional retention of the two stack portions when mated with the edge portions of the base plates in abutment, and means operatively attached to the abutting edges of the base plates to lap the same and facilitate seal and strength of the unit when in mating relation.

2. A flashing unit as defined in claim 1 wherein said operatively attached means comprises a lap plate attached to an abutting edge portion of each base plate on one side so as to be received in lapped relation with the other abutting side edge portion of the opposing base plate.

3. A flashing unit as defined in claim 1 further including a counterflashing of generally hollow cylindrical shape having a longitudinal split therealong, one longitudinal edge of the split forming a continuous channel for receipt of the other longitudinal edge of the counterflashing in frictional engagement therewith, the counterflashing being dimensioned so as to receive the upper end of the assembled stack portions in radially inward spaced relation therefrom, and sealing means for securing and sealing the upper end portion of the counterflashing to a roof protrusion extending therethrough.

4. A flashing unit as defined in claim 1 wherein the base plate and stack portions are formed of a thin, rigid, high-strength metal, and the semi-cylindrical stacks of each half portion are secured to their base plate by welding.

5. A flashing unit as defined in claim 1 wherein each base plate is of generally rectangular configuration and extends for at least about 4" radially outwardly of the stack portion.

6. A flashing unit as defined in claim 1 comprising means on each base plate to facilitate securement of the base plate to a roof construction.

7. A flashing unit as defined in claim 1 further including a counterflashing of generally hollow cylindrical shape for surrounding, in sealing engagement, a penetration of a building roof, said counterflashing being dimensioned to receive the upper end of a portion of the assembled stack portions in radially outward and vertically upward spaced relation therefrom to provide a passageway for venting a roof opening about which the unit is placed.

* * * * *

UNITED STATES PATENT AND TRADEMARK OFFICE

CERTIFICATE OF CORRECTION

PATENT NO. : 4,937,991
DATED : July 3, 1990
INVENTOR(S) : Michael J. Orth

It is certified that error appears in the above-identified patent and that said Letters Patent is hereby corrected as shown below:

In the Abstract, line 3, "regid" should be -- rigid --.

In the Specification:

Column 2, line 64, "111—111" should be -- 3—3 --.

Column 4, line 9, "3/7"" should be -- 3/16" --.

Signed and Sealed this

Tenth Day of December, 1991

Attest:

HARRY F. MANBECK, JR.

Attesting Officer

Commissioner of Patents and Trademarks