IN THE UNITED STATES PATENT AND TRADEMARK OFFICE
BEFORE THE TRADEMARK TRIAL AND APPEAL BOARD

04 JUL 30 PM 11:57

DURAMAX MARINE, LLC ,	)	
	)	
Opposer,	)	
	)	
v.	)	Opposition No. 119,899
	)	
R.W. FERNSTRUM & COMPANY,	)	
	)	
Applicant.	)	

APPLICANT'S NOTICE OF RELIANCE UNDER
TRADEMARK RULE 2.120(j)(4) RE: DEPOSITION OF SEAN FERNSTRUM

Applicant, R. W. Fernstrum & Company (hereinafter "Fernstrum") designates and makes part of the record in the above-captioned opposition the following portions of the deposition testimony of Sean Fernstrum, taken on April 15, 2003 and April 16, 2003:

A. Volume I – April 15, 2003

1. Page 42, lines 17 to 25;
2. Page 44, lines 1 to 16;
3. Page 96, line 2 to page 98, line 18;
4. Page 107, lines 7 to 18;
5. Page 111, line 6 to page 112, line 16; and,
6. Page 126, line 3 to page 127, line 9.

B. Volume II – April 16, 2003

1. Page 41, line 9 to page 43, line 2.

Under Trademark Rule 2.120(j)(4), "[i]f only part of a discovery deposition is submitted and made part of the record by a party, an adverse party may introduce under a notice of reliance any other part of the deposition which ***should in fairness*** be considered so as to make not misleading what was offered by the submitting party." The term "should in fairness" is similar to the language in FRE 106 which governs the introductions of other portions of related writings or recorded statements. "The rule is an expression of the rule of completeness" which is based on the consideration that taking matters out of context may create misleading impressions. FRE 106, Advisory Committee Notes, 1972 Proposed Rules. In the case *sub judice,* Fernstrum designates portions of Sean Fernstrum's testimony to complete the excerpts submitted by Opposer, Duramax Marine, LLC, in its Notice of Reliance.

The testimony designated at page 42, lines 17 to 25 (Vol. I) is necessary to identify the subject of the testimony designated by Duramax on page 43.

The testimony designated at page 44, lines 1 – 16 (Vol. I) is necessary to complete the testimony designated by Duramax on page 43.

The testimony designated at page 96, line 2 to page 98, line 18 (Vol. I) is necessary to complete the testimony designated by Duramax on page 95, line 6 to page 96, line 1.

The testimony designated at page 107, lines 7 to 18, page 111, line 6 to page 112, line 16, and page 126, line 3 to page 127, line 9 is necessary to give context to and complete the testimony designated by Duramax at page 101, line 3 to page 107, line 6, page 111, lines 4 – 5.

The testimony designated at page 41, line 9 to page 43, line 2 (Vol. 2) is necessary to complete the testimony designaged by Duramax at page 40, line 21 to page 41, line 8.

R. W. FERNSTRUM & COMPANY

Date: July 26, 2004

Samuel D. Littlepage, Esq.
Marc A. Bergsman, Esq.
Dickinson Wright PLLC
1901 L Street, N.W., Suite 800
Washington, D.C. 20036
(202) 659-6944
Mbergsman@dickinsonwright.com

Attorneys for Applicant

Certificate Of Service

I hereby certify that one copy of Applicant's Notice Of Reliance Under Trademark Rule 2.120(j)(4) Re: Sean Fernstrum was mailed by first class mail, postage prepaid, this 30th day of July, 2004, to:

D. Peter Hochberg, Esq.
D. Peter Hochberg Co., L.P.A.
The Baker Building, Sixth Floor
1940 East Sixth Street
Cleveland, Ohio 44114

Regina Marti

DC 71119-37 94085

IN THE UNITED STATES PATENT AND TRADEMARK OFFICE

BEFORE THE TRADEMARK TRIAL AND APPEAL BOARD

In the Matter of:

Application Serial No. 75/701, 707
Mark: Drawing of a Marine Heat Exchanger
Published in the Official Gazette at Page TM 400 on May 9, 2000

DURAMAX MARINE, LLC

Opposer,

v. Opposition No. 119,899

R. W. FERNSTRUM & COMPANY,

Applicant

_____/

DEPOSITION OF R. W. FERNSTRUM AND COMPANY

Taken by the Opposer on the 15th day of April, 2003, at the law office of Jonathan P. Barstow, P.C., 104 Sixth Avenue, Menominee, Michigan 49859, at 9:00 a.m.

APPEARANCES:

For the Opposer : MR. D. PETER HOCHBERG
D. PETER HOCHBERG CO., L.P.A.
The Baker Building - 6th Floor
1940 East Sixth Street
Cleveland, Ohio 44114

For the Applicant: MR. MARC A. BERGSMAN
DICKINSON WRIGHT PLLC
1901 "L" Street, N.W., Suite 800
Washington, D.C. 20036-3541

RECORDED BY: Tammy L. Hanson, CER 7005

Q Go to the next page now. This is 071. What--what is the top picture on that page? Where--

A I--

Q --where is that from?

A The top--oh, Passenger Vessel News was--was the publications. I don't believe it's an--any longer in publication.

Q And, to the right of that, there's--what is that picture of?

FORM SMI-25 PENGAD • 1-800-631-6989

Q When you say flattened. I--I--I'm not sure I understand what you're talking about.

A It--I guess you'd call--how to term it--it's called something in the Photo Shop, but, basically, it's--the imagine is--is altered, visually, and--

Q Well, when you say it's altered visually, what do you mean by that?

A It's made to look more like a--in this particular case, look more like a--a--a line art drawing than a--than a three dimensional object.

Q A line art drawing. I guess I don't--

A Well, it--

Q --understand what you mean by that.

A More like an art--more like an artistic drawing of--of a product, as opposed to the--a simple snapshot of an--of an existing product.

FORM SMI-25 PENGAD • 1-800-631-6989

that information.

Q And, how would you research that?

A You would look at past documentation and, also, documentation from the engine manufacturer.

Q And, what other information would you get for--that you use for the computer, that goes on this Recommendation Form? I--I think it--let me just repeat what you just told me.

In other words, what you get would be the make--the make of the engine. And, the model would be the model of the engine.

A Yes.

Q And, the--the HP, I take it that's horse power?

A Yes. The rating of the engine.

Q And, what's PRN?

A I think that was suppose to be RPM.

Q Oh.

A Typo.

Q And, then heat rejection. Wou--the-who gives you that information?

A Heat rejection of the engine, that is either obtained by the customer or by us from the engine company.

Q And, the fresh water flow rate?

A Same as heat rejection.

Q And, fresh water temperature heat coolant?

FORM SMI-25 PENGAD • 1-800-631-6989

A That as well.

Q Would it--how would--how would that vary?

A Which? Fresh water temperature--

Q Right.

A --into the coolant? How would that vary?

Q Why--why would it--why would it vary?

A Why would it vary? It would vary based on the--on the engine. Some engines run--run hotter than others. They may have multiple cooling circuits. A high temperature and a low temperature circuit.

Q And, what is the--the following term, "fresh water temp out or drop across cooler?"

A That's used in conjunction with the temperature into the cooler. If the--if the temperature into the cooler is not necessarily known, but a--a temperature has to be maintained returning to the engine, then that information would be provided.

Q And, where would--who would provide that?

A The engine manufacturer.

Q And, the minimum hull speed at full power, the--on the next line?

A That would be Application specific referring to the--the vessel or the--the Application in particular. The speed of the water passing--the minimum speed of the water passing in the cooler.

FORM SMI-25 PENGAD • 1-800-631-6989

Q And, who would provide the information about maximum sea water temp?
A That would come from the customer.
Q Engine age?
A That as well.
Q Customer antifreeze used?
A Yeh. Percentage antifreeze used, that would, also, come from the customer.
Q Ma--make and model of year?
A Yeh. That would be provided by the customer.
Q The type of boat?
A That as well.
Q And, the hull construction?
A Mm-hm.
Q And, now, this information goes into the computer. What does the computer generate out?
A The computer generates a--generates a specific model that would meet the--that would meet those specifications.

FORM SMI-25 PENGAD • 1-800-631-6989

to, from that one sheet? What's the--

A Oh, those.

Q What document number was that?

A It was document number 0254.

Q Okay.

A The Recommendation Form?

Q Right. That the--so the information--to make a custom design, it's the information that--that's obtained from the Recommendation Form, is that correct?

A Partially, yes. We--we gain that information from here, in--in addition to--to comments on--on requests for, as I mentioned, flanges or an alternative to the--the--the bolts and so on.

Q So, what percentage did you say were custom designed, that Fernstrum makes?

A Custom work will vary from year to year. To base a percentage on it, I would say in excess of--of 30 percent. In fact, I would, probably, say in excess of 60 percent.

FORM SMI-25 PEN3AD • 1-800-631-6989

of custom design to meet owners operating conditions and the engine manufactures exact cooling requirements.

In getting into that statement on--on this particular document, what--what we're really referring to there, is that we build to order. Probably 80 to 90 percent of our units are built to order by custom design.

BY MR. HOCHBERG:

Q Do you go to terms that correspond to custom design?

A As far as corresponding meaning same as I--I--I really just--probably just sticking with the custom design, we--we more or less view ourselves as a--as a job shop. We build--we build the coolers to the specifications of the--of the--of the customer as those orders come in.

We do stock a small number of units but it--it's fairly insignificant compared to the total sales over the course of a year.

A

FORM SMI-25 PENGAD • 1-800-631-6989

Q Now, in this document, that you helped to create, you say that 30 percent are custom designed.

A Mm-hm.

Q Now, earlier, just a few minutes ago, you testified that it was much higher than that. In fact, what did you testified that it was?

A Oh, yes. I understand. The--the meaning of custom design in that case. By custom design, in the testimony, I wanted to refer to custom design as being built to order. And, I had said that that was approximately 85 to 90 percent.

Perhaps a better word to use than custom design would be a special design. In which case that the--the 30--30 percent or 60 percent, in that neighborhood, was more the rule.

Q Now, wait a minute. This refers to 30 percent.

A Yeh.

Q Now, what does--what does 30 percent refer to?

A Thirty percent refer--refers to, in this case, what would be my testimony, the special design. For example, referring to the--the illustration in the center of--of the page on 000114 and the call outs on that particular illustration.

FORM SMI-25 PENGAD • 1-800-631-6989

Q And--and what did you say a special design was?

A Special design would be a design that differed in some way from--from what would be a standard unit, say a unit that had nozzles. In this case, in the particular illustration, this unit has flanges. In that case, that would be a special unit. In the terminology on this page, we use the word custom designs. That should probably have been special designs, in terms of my testimony today.

FORM SMI-25 PENGAD • 1-800-631-6989

IN THE UNITED STATES PATENT AND TRADEMARK OFFICE

BEFORE THE TRADEMARK TRIAL AND APPEAL BOARD

In the Matter of:

Application Serial No. 75/701,707
Mark: Drawing of a Marine Heat Exchanger
Published in the Official Gazette at Page TM 400 on May 9, 2000

DURAMAX MARINE, LLC

Opposer,

v

Opposition No. 119,899

R.W. FERNSTRUM & COMPANY,

Applicant

DEPOSITION OF R.W. FERNSTRUM AND COMPANY

VIA SEAN FERNSTRUM

DAY TWO OF TESTIMONY

Taken by the Opposer on the 16th day of April, 2003 at the office of Jonathan P. Barstow, 104 Sixth Ave., Menominee, Michigan at 9:09 a.m.

Appearances:

For the Opposer :	MR. D. PETER HOCHBERG D. PETER HOCHBERG CO., L.P.A. The Baker Building - 6th Floor 1940 East Sixth Street Cleveland, Ohio 44114
For the Applicant:	MR. MARC A. BERGSMAN DICKINSON WRIGHT PLLC 1901 "L" Street, N.W., Suite 800 Washington, D.C. 20036-3541
RECORDED BY:	Tammy L. Hanson, CER 7005

Superior Reporting Service
500 S. Stephenson Avenue - Suite 301
Iron Mountain, MI 49801
(906) 774-7433 or 1-800-321-0240
www.superiorreporting.com

A It's a--it appears to be a competitor's version of a Keel Cooler.

Q And, do you know which competitor it would be?

A No.

Q Do you which--who the possibility--which--who the possible competitors would be?

A To my knowledge, it would be Duramax and East Park Radiator.

Q Now, if you saw a picture like that in--in a trade journal, and assuming that you got registration for--for the subject of your Trademark Application, 75/701,707, would you consider alerting your counsel that a Trademark infringement has occurred?

A If I saw this drawing?

Q Yes.

A No.

Q Now suppose that--suppose that drawing were modified to remove that central bracket with--

A Yeh.

Q The central bracket with the two--

A Two bolts.

Q --bolts--two bolts--the two bolts extending through it and this is the middle of the--that--unit.

A Mm-h.

Q Suppose that was removed and--and--and suppose that it had

FORM SMI-25 PENGAD • 1-800-631-6989

the same bar across it as is--as in the Trade--in--in your Fernstrum Trademark Application.

A This--

Q You can look at it right now.

A This bar.

Q That little bar there. Suppose it had that.

A That support--

Q If that--if that support was there instead of that--

A Mm-h.

Q --those two bolts, would you consider then letting your counsel there may be a Trademark infringement had occurred?

A No.

Q Why wouldn't you consider that a Trademark infringement would have occurred?

A It's not a depiction of my product. It's not a depiction of the Mark. It is a depiction of a competitors product.

Q What's the difference between this product and--and the--the Fernstrum product?

A The difference between products not necessarily these illustrations.

Q Well, I'm not talking about the illustrations.

A The illustrations?

Q Yeh.

A One that stands out particular--particularity in my mind,

FORM SMI-25 PENGAD • 1-800-631-6989

is the fact that the--the headers are not rectangular but they have a--a--an angle to them.

FORM SMI-25 PENGAD • 1-800-631-6989

IN THE UNITED STATES PATENT AND TRADEMARK OFFICE
BEFORE THE TRADEMARK TRIAL AND APPEAL BOARD

04 JUL 30 PM 11:57

DURAMAX MARINE, LLC ,	)	
	)	
Opposer,	)	
	)	
v.	)	Opposition No. 119,899
	)	
R.W. FERNSTRUM & COMPANY,	)	
	)	
Applicant.	)	

APPLICANT'S NOTICE OF RELIANCE UNDER
TRADEMARK RULE 2.120(j)(4) RE: DEPOSITION OF PAUL FERNSTRUM

Applicant, R. W. Fernstrum & Company (hereinafter "Fernstrum") designates and makes part of the record in the above-captioned opposition the following portions of the deposition testimony of Paul Fernstrum, taken on April 21, 2003:

1. Page 47, line 11 to page 48, line 6
2. Page 53, line 3 to page 53, line 8
3. Page 72, line 25 to page 73, line 24
4. Page 101, line 7 to page 102, line 3
5. Page 131, line 12 to page 131, line 22

Under Trademark Rule 2.120(j)(4), "[i]f only part of a discovery deposition is submitted and made part of the record by a party, an adverse party may introduce under a notice of reliance any other part of the deposition which ***should in fairness*** be considered so as to make not misleading what was offered by the submitting party." The term "should in fairness" is similar to the language in FRE 106 which governs the introductions of other portions of related writings or recorded statements. "The rule is an expression of the rule of completeness" which is based on the consideration that

an expression of the rule of completeness" which is based on the consideration that taking matters out of context may create misleading impressions. FRE 106, Advisory Committee Notes, 1972 Proposed Rules. In the case *sub judice,* Fernstrum designates portions of Sean Fernstrum's testimony to complete the excerpts submitted by Opposer, Duramax Marine, LLC, in its Notice of Reliance.

The testimony designated at page 11, lines 2 – 25 is necessary to complete and give context to the testimony designated by Duramax at page 9, line 25 to page 10, line 18 and page 12 lines 5 to 16.

The testimony designated at page 47, line 11 to page 48, line 6 is necessary to complete that portion of the testimony designated by Duramax at page 46, line 24 to page 47, line 10.

The testimony designated at page 53, line 3 to page 53, line 8 is necessary is necessary to include the objection raised by Fernstrum to the question posed by Duramax at page 52, line 17 to page 53, line 2.

The testimony designated at page 72, line 25 to page 73, line 24 is necessary to complete the testimony and give context to the testimony designated by Duramax at page 72, lines 6 to 24.

The testimony designated at page 101, line 7 to page 102, line 3 is necessary to complete and give context to the testimony designated by Duramax at page 102, line 4 to page 103, line 12.

The testimony designated at page 131, lines 12 to 22 is necessary to explain the testimony designated by Duramax at page 58, line 15 to page 60, line 18.

R. W. FERNSTRUM & COMPANY

Date: July 26, 2004

Samuel D. Littlepage, Esq.
Marc A. Bergsman, Esq.
Dickinson Wright PLLC
1901 L Street, N.W., Suite 800
Washington, D.C. 20036
(202) 659-6944
Mbergsman@dickinsonwright.com

Attorneys for Applicant

Certificate Of Service

I hereby certify that one copy of Applicant's Notice Of Reliance Under Trademark Rule 2.120(j)(4) Re: Paul Fernstrum was mailed by first class mail, postage prepaid, this 30th day of July, 2004, to:

D. Peter Hochberg, Esq.
D. Peter Hochberg Co., L.P.A.
The Baker Building, Sixth Floor
1940 East Sixth Street
Cleveland, Ohio 44114

DC 71119-37 94162

IN THE UNITED STATES PATENT AND TRADEMARK OFFICE
BEFORE THE TRADEMARK TRIAL AND APPEAL BOARD

In the Matter of:

Application Serial No. 75/701,707
Mark: Drawing of a Marine Heat Exchanger Published in the Official Gazette at Page TM 400 on May 9, 2000

COPY

DURAMAX MARINE, LLC	)	
	)	
Opposer,	)	
	)	
v.	)	Opposition No. 119,899
	)	
R. W. FERNSTRUM & COMPANY,	)	
	)	
Applicant.	)	
	)	

DEPOSITION OF PAUL W. FERNSTRUM

Upon oral examination, taken by counsel for Opposer, on April 21, 2003, commencing at 9:21 a.m., held at Law Offices of Frederick C. Kramer, Suntrust Bank Building, Suite 201, 950 North Collier Boulevard, Marco Island, Florida, before Susan J. Simonetti, Court Reporter and Notary Public, State of Florida at Large.

COLLIER REPORTING SERVICE SM
239-262-7113
www.collierreporting.com
"Serving Southwest Florida Since 1974"
Mailing Address:
2335 Tamiami Trail North
Suite 405
Naples, Florida 34103
QUALITY ASSURANCE
A Quality-Assured member of the DepoNet® network of court reporting firms.
1-800-DEPONET

or -- I will repeat it.

Is it true that shipbuilders generally want to have a small footprint today?

MR. LITTLEPAGE: I object to the form of the question. I mean, this witness is not being produced as an expert in shipbuilding business or has he taken a survey to ascertain what shipbuilders want or don't want.

I think you can ask, you know, to his own personal knowledge, what does he believe is an attribute that shipbuilders desire, but I think the question asks what was in the shipbuilders' minds.

Q. (By Mr. Hochberg) If you can answer his question, that would be fine with me.

A. Okay.

Q. What in your mind?

A. In my mind?

Q. Right.

A. Today, they're only interested in cost. They don't care how large the heat exchanger really is any longer.

There was a time when they wanted a smaller unit and as compact as possible, but a compact unit may cost more than a bulky unit, and the yards today worldwide are interested in price and price alone.

answer them, then don't answer them.

On Page 0502, which is Page 3 of this -- this is called the Remarks on 0500. The title of this is Remarks. So I may use the term, remarks, or I may call it a response.

Now on Page 0502, at the end of the first paragraph following the small letter A, it says: There is no utility patent which discloses the utilitarian advantages of the flat, grid-like appearance of the product.

Then it goes on to briefly discuss this older Fernstrum patent, 2,382,218, which I think was Exhibit 61.

Now, remember what I just said, that it said that the utility patent -- that there is no utility patent which discloses the utilitarian advantages of the flat, grid-like appearance.

MR. LITTLEPAGE: Is there a purpose behind this, Mr. Hochberg?

Again, this is not the application that's involved in this proceeding. It is totally irrelevant to this opposition proceeding.

What was said or not said in an abandoned -- in a different abandoned application has absolutely no relevance to this opposition proceeding.

MR. HOCHBERG: That may be your opinion.

MR. LITTLEPAGE: Well, it is my opinion.

MR. HOCHBERG: Okay.

MR. LITTLEPAGE: And I think it's harassing the witness here by asking inane, irrelevant questions.

MR. HOCHBERG: They're not inane and they're not irrelevant.

Exhibit 13 be virtually the same?

A. No.

MR. LITTLEPAGE: Objection.

Q. (By Mr. Hochberg) What would the difference be?

MR. LITTLEPAGE: Well, the --

THE DEPONENT: I should have waited.

MR. LITTLEPAGE: The documents speak for themselves. The differences are what they show.

you think it's more than likely that one of the people at Fernstrum company would have supplied it?

MR. LITTLEPAGE: I will stipulate that these brochures were obtained by counsel directly from the companies involved, as opposed to R.W. Fernstrum.

Q. (By Mr. Hochberg) Now, my question is: Do you know why there was nothing supplied about the Duracooler, which was a keel cooler having rectangular coolant flow tubes from Duramax Marine or Duramax, Inc. at that time or a product called Durawell from East Park Radiator, which also had rectangular coolant flow tubes, also had keel coolers with rectangular coolant flow tubes in them?

Do you know why those brochures were not submitted to the trademark office?

MR. LITTLEPAGE: Just a yes or no.

A. No.

Q. Do you know whether they were ever considered being -- filing them with the trademark office?

MR. LITTLEPAGE: Yes or no.

A. No.

Q. Who do you think would know that?

MR. LITTLEPAGE: I will stipulate counsel would, namely, me. Do you want to take my deposition?

MR. HOCHBERG: Let's see how long this one goes.

Q. (By Mr. Hochberg) Do you think that either Sean

or Todd Fernstrum would have supplied those to counsel, Fernstrum's counsel?

A. Walter and --

Q. Well, no, I'm not talking about the Walter. I'm talking about the Duracooler from Duramax Marine or the Durawell from East Park Radiator.

MR. LITTLEPAGE: What's the date of the response?

MR. HOCHBERG: Date of the response is -- I think it's about a year after those two units came on the market.

MR. LITTLEPAGE: May of 1998. Counsel, are you aware of any literature showing the Duramax cooler as of May 18th, 1998, or are you aware of any promotional literature from East Park as of May 18th, 1998?

MR. HOCHBERG: Well, I'm not being deposed so I'm not going to answer that.

MR. LITTLEPAGE: Well, you're asking him -- you're assuming that there was literature in existence to file, and I'm just asking you the basis for your assumption.

MR. HOCHBERG: Okay. Well --

MR. LITTLEPAGE: I think, if you check your facts, there was no such literature.

MR. HOCHBERG: Perhaps and perhaps not.

MR. LITTLEPAGE: Okay. Primarily because the

[redacted]

Q. Continuing, it says, in 1990, it says, The product grows to twenty thousand models; and then for year 2000, it says, R.W. Fernstrum begins two-year warranty program over one hundred thousand models of keel coolers available?

A. That's correct.

Q. Now, it says they're available. So if someone wants to buy a Gridcooler, they would send in the recommendation form, and they would get one of these one hundred thousand models?

A. Conceivably. There is more to it than that.

Q. Is there?

A. Yeah.

Q. Well, what more is there to it?

A. Well, it's not just coming up with a particular model. No. We have to look at a lot of other factors that aids in the customer installing the unit. Maybe it can't be what we'd normally call a standard unit years ago with just a plain nozzle. It might have to have an elbow

in there. It might have to be bent. Maybe we have to shift a few other parts on there because of conflicting members on a ship.

Q. Now, if a person -- I mean, if a shipbuilder, say, ordered a model. Suppose it was just one that was already existing. Would his order be considered a new model? In other words --

A. No, if he is ordering an existing model.

Q. Assume that he filled out this recommendation form, and the Fernstrum company recommended some unit, and it turned out this unit was one that they had already made an earlier one for?

A. That's the same model.

Q. So that would not add to the hundred thousand?

A. No.

Q. But if he added an inch to it or put a bend in it or something like that, that would be a new model?

A. It becomes a new model. As soon as you change --

MR. LITTLEPAGE: Just answer the question.

Q. (By Mr. Hochberg) Well, but that's what I question.

A. The features.

Q. As soon as any features are changed, it becomes a new model?

A. That's correct.

Q. (By Mr. Hochberg) Can you tell me what engineered keel cooling means?

A. Engineered keel cooling? It means that we designed the heat exchanger to meet the customer's needs and it may mean taking into account the vessel, the type of use, whether it's a high speed, low speed, it's compact, what kind of service it's going to have, where it's going to operate in the world, whether or not we have to place extra plates on the bottom to stiffen the tubes or not; and we design the heat exchanger around the parameters for cooling the engine.

E

p

IN THE UNITED STATES PATENT AND TRADEMARK OFFICE
BEFORE THE TRADEMARK TRIAL AND APPEAL BOARD

DURAMAX MARINE, LLC ,	)	
	)	
Opposer,	)	
	)	
v.	)	Opposition No. 119,899
	)	
R.W. FERNSTRUM & COMPANY,	)	
	)	
Applicant.	)	

04 JUL 30 PM 11:08

APPLICANT'S FIRST NOTICE OF
RELIANCE UNDER TRADEMARK RULE 2.122(e)

Applicant hereby notifies Opposer of its reliance on the attached certified copy of the prosecution history file of U.S. Trademark Registration No. 2,357,354. Specifically, Applicant is relying on its November 1, 1999 Amendment which was responsive to the September 27, 1999 official Trademark Office Action. By that amendment, applicant sought to register the drawing of the keel cooler (the same drawing that applicant seeks to register in the application being opposed) under Section 2(f) of the Lanham Act. Since no one lodged an objection to the application of that registration, the registration demonstrates that the marine industry, including opposer, did not find that the registration of that mark would bestow upon applicant a right of ownership in that drawing of the keel cooler to which it was not otherwise entitled.

R. W. FERNSTRUM & COMPANY

Date: July 26, 2004

Samuel D. Littlepage, Esq.
Marc A. Bergsman, Esq.
Dickinson Wright PLLC
1901 L Street, N.W., Suite 800
Washington, D.C. 20036
(202) 659-6944
Mbergsman@dickinsonwright.com

Attorneys for Applicant

Certificate Of Service

I hereby certify that one copy of Applicant's First Notice Of Reliance Under Trademark Rule 2.122(e) was mailed by first class mail, postage prepaid, this 30th day of July, 2004, to:

D. Peter Hochberg, Esq.
D. Peter Hochberg Co., L.P.A.
The Baker Building, Sixth Floor
1940 East Sixth Street
Cleveland, Ohio 44114

Regina Mart

DC 71119-37 94787

1185262

THE UNITED STATES OF AMERICA

TO ALL TO WHOM THESE PRESENTS SHALL COME:

UNITED STATES DEPARTMENT OF COMMERCE
United States Patent and Trademark Office

June 28, 2004

THIS IS TO CERTIFY THAT ANNEXED IS A TRUE COPY FROM THE RECORDS OF THIS OFFICE OF THE TRADEMARK FILE WRAPPER AND CONTENTS OF:

TRADEMARK APPLICATION: *75/715,815*
FILING DATE: *May 28, 1999*
REGISTRATION NUMBER: *2,357,354*
REGISTRATION DATE: *June 13, 2000*

By Authority of the
COMMISSIONER OF PATENTS AND TRADEMARKS

T. Lawrence

T. LAWRENCE
Certifying Officer

FORM PTO-102
10/97

U.S. DEPARTMENT

REG NUM: 2357354
REG DT: 06/13/2000
S/N 75/715815

75-715815

LAW OFFICE 104

PRINCIPAL

ATTORNEY ADVISOR: ALT

Examining Attorney (Please Print Name)

Approved for Publication (Principal Register) (Signature)

Approved for Registration (Section 8) (Signature)

Approved for Registration (Supplemental Register) (Signature)

Date Published in Trademark Gazette

PUBLISHED
03/21/00

75715815

TRADEMARK APPLICATION SERIAL NO. _____ SER219

U.S. DEPARTMENT OF COMMERCE
PATENT AND TRADEMARK OFFICE
FEE RECORD SHEET

06/15/1999 GLLOYD 00000144 75715815
01 FC:361 245.00 OP

PTO-1555
(5/87)

Mark: Miscellaneous Design

Class: 7

TO THE COMMISSIONER OF PATENTS AND TRADEMARKS:

Applicant: R. W. Fernstrum & Company
a Michigan corporation

Address: 1716 Eleventh Avenue
P.O. Box 97
Menominee, Michigan 49858-0097

The above-identified applicant has adopted and is using the trademark shown on the accompanying drawing for the following goods:

EXTERNAL COOLING SYSTEM FOR MARINE ENGINES, NAMELY, HEAT EXCHANGERS

and requests that said mark be registered in the United States Patent and Trademark Office on the Principal Register established by the Act of July 5.

The mark was first used on the goods at least as early as 1980; was first used on the goods in interstate commerce at least as early as 1980; and is now in use in commerce.

The mark is used shipping labels and other advertising materials. Three (3) specimens showing the mark as actually used on lables are submitted herewith.

TRADEMARK FEE PROCESS.
RECEIVED
1999 MAY 28 P 3:49
US PATENT &
TRADEMARK OFFICE

POWER OF ATTORNEY

The undersigned hereby appoints Marc A. Bergsman, Samuel D. Littlepage, Conrad J. Clark, David R. Haarz, Christopher W. Brody, J. John Shimazaki, and Jeffrey M. Petrash, all members of the District of Columbia Bar, and all located at 1901 L Street, N.W., Suite 800, Washington, D.C. 20036, and Theresa A. Orr, a member of the Michigan Bar, located at 500 Woodward Avenue, Detroit, Michigan 48226-3425, to file this application with full power of substitution and revocation, and to transact all business in the Patent and Trademark Office in connection therewith.

Furthermore, Applicant hereby authorizes Dickinson Wright PLLC its employees and agents, to act in connection with this application and upon whom may be served notices or process in proceedings affecting the mark.

The Patent and Trademark Office is requested to send correspondence to Marc A. Bergsman, of Dickinson Wright PLLC at 1901 L Street, N.W., Suite 800, Washington, D.C. 20036, or to telephone (202) 457-0160.

Enclosed is a check for $245 made payable to the Commissioner of Patents and Trademarks. Please charge any fee deficiency to Deposit Account No. 04-1061.

DECLARATION

The undersigned declares that he is the President of Applicant corporation, and is authorized to execute this application on behalf of said corporation; he believes said corporation to be the owner of the mark sought to be registered; to the best of his knowledge and belief no other person, firm, corporation, or association has the right to use said mark in commerce, either in the identical form or in such near resemblance thereto as to be likely, when applied to the goods of such other person, to cause confusion, or to cause mistake, or to deceive; all statements made herein of his own knowledge are true and all statements made on information and belief are believed to be true; and further these statements were made with the knowledge that willful false statements and the like so made are punishable by fine or imprisonment, or both, under Section 1001 of Title 18 of the United States Code and such willful false statements may jeopardize the validity of the application or any registration resulting therefrom.

R. W. FERNSTRUM & COMPANY

Dated: May 5, 1999

By: Paul W. Fernstrum
Paul W. Fernstrum
President

75715815

SER219

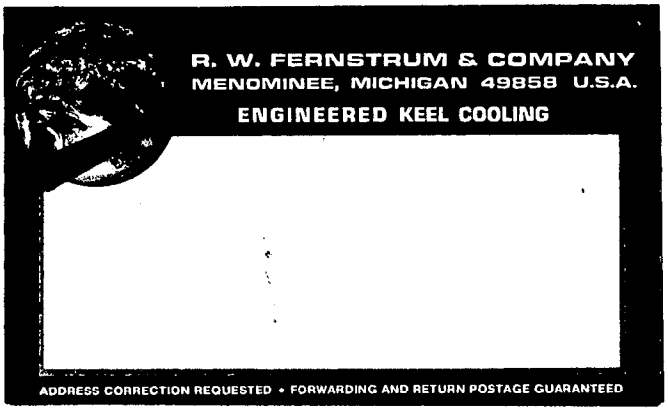

75715815

SER219

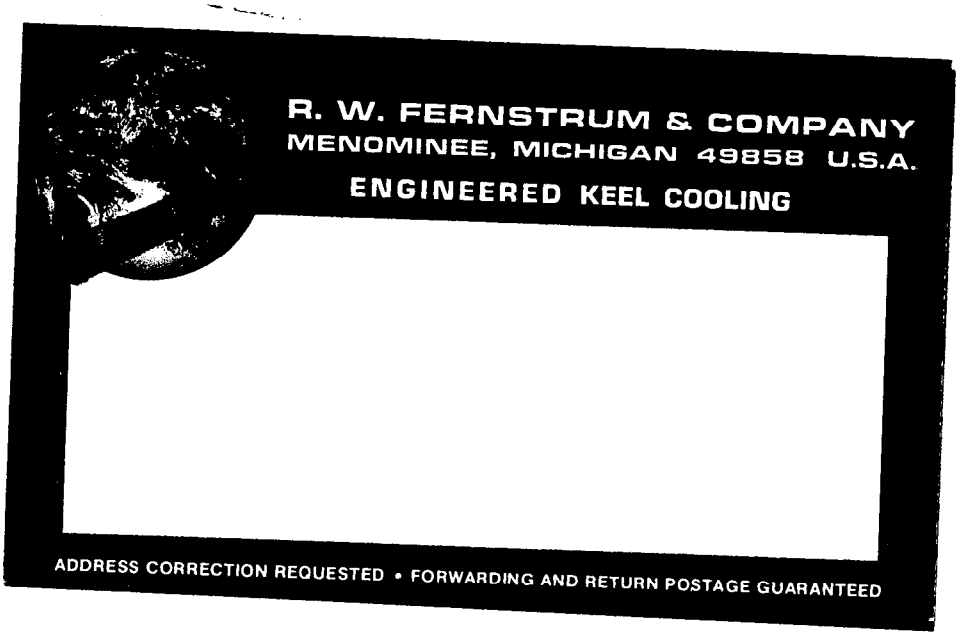

APPLICANT R. W. Fernstrum & Company

ADDRESS 1716 Eleventh Avenue
P.O. Box 97
Menominee, Michigan 49858-0097

FIRST USE 1980 IN COMMERCE 1980

GOODS OR SERVICES External cooling systems for marine engines, namely, heat exchangers.

05-28-1999
U.S. Patent & TMOfc/TM Mail Rcpt Dt. #10

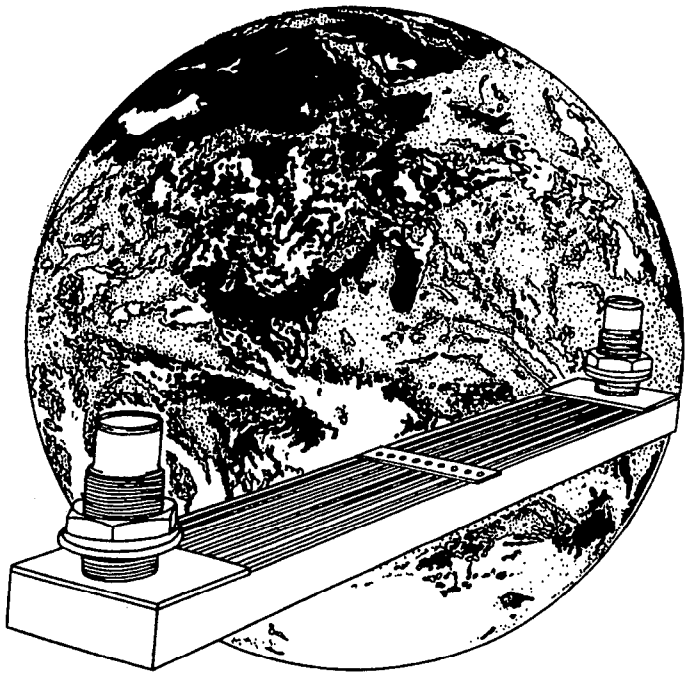

PUBLISHED
03/21/00

DT.

TRADEMARK

75715815

UNITED STATES DEPARTMENT OF COMMERCE
Patent and Trademark Office

SERIAL NO. 75/715815 **APPLICANT** R. W. Fernstrum & Company	PAPER NO.
MARK MISCELLANEOUS DESIGN	ADDRESS: **Assistant Commissioner for Trademarks 2900 Crystal Drive Arlington, VA 22202-3513**
ADDRESS MARC A. BERGSMAN DICKINSON WRIGHT PLLC 1901 L STREET, N.W., SUITE 800 WASHINGTON, D.C. 20036	**ACTION NO.** 01
	MAILING DATE 09/27/99
	REF. NO.
FORM PTO-1525 (5-90) **U.S. DEPT. OF COMM. PAT. & TM OFFICE**	If no fees are enclosed, the address should include the words "Box Responses - No Fee."
	Please provide in all correspondence: 1. Filing Date, serial number, mark and Applicant's name. 2. Mailing date of this Office action. 3. Examining Attorney's name and Law Office number. 4. Your telephone number and ZIP code.

A PROPER RESPONSE TO THIS OFFICE ACTION MUST BE RECEIVED WITHIN 6 MONTHS FROM THE DATE OF THIS ACTION IN ORDER TO AVOID *ABANDONMENT.* *For your convenience and to ensure proper handling of your response, a label has been enclosed. Please attach it to the upper right corner of your response. If the label is not enclosed, print or type the Trademark Law Office No., Serial No., and Mark in the upper right corner of your response.*

RE: Serial Number: 75/715815

The assigned examining attorney has reviewed the referenced application and determined the following.

DISCLAIMER REQUIREMENT

The applicant must disclaim the descriptive design of the heat exchanger apart from the mark as shown. Trademark Act Section 6, 15 U.S.C. Section 1056; TMEP sections 1213, 1213.02(a) and 1213.02(c). The design is merely descriptive because it is a non-fanciful depiction of an important feature of the goods. *In re Society for Private and Commercial Earth Stations*, 226 USPQ 436 (TTAB 1985); *In re Underwater Connections, Inc.*, 221 USPQ 95 (TTAB 1983).

Trademark Act Section 6(a), 15 U.S.C. Section 1056(a), states that the Commissioner may require the applicant to disclaim an unregistrable component of a mark. Trademark Act Section 2(e), 15 U.S.C. Section 1052(e), bars the registration of a mark which is merely descriptive or deceptively misdescriptive, or primarily geographically descriptive or deceptively misdescriptive of the goods. Therefore, the Commissioner may require the disclaimer of a portion of a mark which, when used in connection with the goods or services, is merely descriptive or deceptively misdescriptive, or

114

IN THE UNITED STATES PATENT AND TRADEMARK OFFICE

In re the application of	)	
	)	
R. W. Fernstrum & Co.	)	Examining Attorney
	)	
Serial No. 75/715,815	)	Jill C. Alt, Esq.
	)	
Filing Date: May 28, 1999	)	Law Office 114
	)	
Mark: Miscellaneous Design	)	

AMENDMENT

Hon. Commissioner Of Patents
And Trademarks
Washington, D.C. 20231

11-01-1999
U.S. Patent & TMOfc/TM Mail Rcpt Dt. #26

TRADEMARK FEE PROCESS
RECEIVED
1999 NOV -1 P 4:05
US PATENT &
TRADEMARK OFFICE

Dear Sir:

This is responsive to Trademark Office Action No. 1 dated September 27, 1999.

Please amend the application to register the design of the heat exchanger under Section 2(f) of the Lanham Act, 15 U.S.C. § 1052(f).

RECEIVED
1999 NOV -3 P 12:
TMEO
LAW OFFICE 114

REMARKS

The Trademark Examining Attorney requested a disclaimer of "the descriptive design of the heat exchanger apart from the mark as shown." According to the Examining Attorney "The design is merely descriptive because it is a non-fanciful depiction of an important feature of the goods." Applicant requests that the disclaimer requirement be withdrawn because the design has acquired secondary meaning.

To support its claim that the design of the heat exchanger has acquired secondary meaning, applicant submits the *A Survey Of Secondary Meaning Of The*

primarily geographically descriptive or deceptively misdescriptive. If an applicant does not comply with a disclaimer requirement, the examining attorney may refuse registration of the entire mark. TMEP section 1213.01(b).

A disclaimer does not remove the disclaimed matter from the mark. It is simply a statement that the applicant does *not* claim exclusive rights in the disclaimed wording or design apart from the mark as shown in the drawing.

The computerized printing format for the *Trademark Official Gazette* requires a standard form for a disclaimer. TMEP section 1213.09(a)(i). A properly worded disclaimer should read as follows:

No claim is made to the exclusive right to use the representation of a heat exchanger apart from the mark as shown.

See In re Owatonna Tool Co., 231 USPQ 493 (Comm'r Pats. 1983).

EXPEDITED COMMUNICATIONS DATA

PLEASE NOTE: All of the issues raised can be resolved by telephone, fax or email. The applicant may contact the examining attorney, instead of submitting a written response, to expedite the application.

It might expedite matters if the applicant contacted the examining attorney by e-mail, telephone or fax. The e-mail address is jill.alt@uspto.gov. The fax number is (703) 308-9207. The examining attorney's telephone number is (703) 308-9114 Ext. 133. Fax or e-mail avoid the twin possibilities of "telephone tag" and mailroom delay.

NO CONFLICTING REGISTRATIONS

The examining attorney has searched the Office records and has found no similar registered or pending mark which would bar registration under Trademark Act Section 2(d), 15 U.S.C. Section 1052(d). TMEP section 1105.01.

Jill C. Alt
Examining Attorney, Law Office 114
(703) 308-9114 Ext. 133

Shape And Appearance Of the Fernstrum Keel Cooler Tubing by the Sorensen Marketing\Management Corporation (September, 1998) (hereinafter "Survey").[1] "Survey evidence, market research and consumer reaction studies are relevant in establishing acquired distinctiveness." TMEP § 1212.06(d); *Federal Glass Co. v. Corning Glass Works,* 162 U.S.P.Q. 279 (T.T.A.B. 1969)(survey evidence of various types accepted as proof of secondary meaning in mark); *In re Levis Strauss & Co.,* 165 U.S.P.Q. 348 (T.T.A.B. 1970)(survey proper evidence to prove secondary meaning in mark); 5 McCarthy On Trademarks And Unfair Competition § 32:158, p. 32-225 (4th ed. 1999)("Surveys as to the state of mind of prospective purchasers have been offered as evidence of the existence of secondary meaning in a mark")

The purpose of the survey was to determine whether the appearance of the heat exchanger had acquired secondary meaning. Survey, at p. 3. To accomplish this, the survey interviewer, a research and consulting company in the boat building and maintenance industry, prepared a data base of approximately 200 companies that sell, replace, or repair marine heat exchangers in states bordering the Gulf of Mexico. The interviewer conducted 150 interviews. Survey, at pp. 5-6. The interview subjects were shown three photographs of the tubing of the heat exchanger and instructed to look at them as if they were examining a catalog or brochure. Survey, at p. 8.

Fifty-seven percent of the survey respondents said that the heat exchanger was manufactured by one company. Survey, at p. 12. Ninety-five percent of the

---

[1] The heat exchanger at issue is a keel cooler. It is called a keel cooler because it is attached to the keel of a ship which allows the ambient sea water to cool the engine cooling fluid. The term keel cooler is used in the Survey.

respondents who said that the heat exchanger was manufactured by one company identified applicant as the manufacturer. Survey, at p. 14. Eighty-one percent of the total survey respondents identified applicant as the manufacturer of the heat exchanger. Survey, at p. 13. Based on these results, the market research company concluded that the appearance of the heat exchanger had acquired secondary meaning.[2]

In view of the foregoing, applicant respectfully requests that the requirement for a disclaimer be withdrawn, that the design of the heat exchanger should be registered under Section 2(f), and that the application be approved for publication.

R. W. FERNSTRUM & CO.

Date: November 1, 1999

Samuel D. Littlepage, Esq.
Marc A. Bergsman, Esq.
Dickinson Wright PLLC
1901 L Street, N.W., Suite 800
Washington, D.C. 20026
(202) 457-0160

Attorneys For Applicant

DC 71119-35 54854

[2] Figures over 50 percent are generally regarded as sufficient to establish secondary meaning. 5 McCarthy On Trademarks And Unfair Competition § 32:190, p. 32-286 (4th ed. 1999). *See, Monsieur Henri Wines, Ltd. v. Duran,* 204 U.S.P.Q. 601 (T.T.A.B. 1979)(37 percent of the interviewees associated opposer's brand with a background design; probative to corroborate finding of strong trademark in design).

Survey Research Studies Report

A SURVEY OF SECONDARY MEANING OF THE SHAPE AND APPEARANCE OF THE FERNSTRUM KEEL COOLER TUBING

September 1998

Sorensen Marketing\Management Corporation

Survey Research Studies Report

A SURVEY OF SECONDARY MEANING OF THE SHAPE AND APPEARANCE OF THE FERNSTRUM KEEL COOLER TUBING

September 1998

TABLE OF CONTENTS

I. BACKGROUND AND PURPOSE OF STUDY

II. STUDY METHODS

A. Defined population (the universe) and sampling technique

B. Sample characteristics (Tables 4A-7A and 4B-7B)

C. The interview questionnaires and photographs

D. Interviewer instructions

E. Interviewer affirmation and interview validation

F. Coding and tabulating procedures

G. Non-mention of litigation implications of study

III. STUDY FINDINGS

A. Whether or not the keel cooler was manufactured by one company or more than one company (Tables 1A and 1B)

B. Company source name identifications (Tables 2A and 2B)

C. Reasons for company source name identifications (Tables 3A and 3B)

IV. CONCLUSIONS

TABLE OF CONTENTS (Continued)

EXHIBITS

A. Screener Questionnaire

B. Main Questionnaire

C. Three Photographs of Unmarked Fernstrum Keel Cooler Tubing

D. Sorensen Field Instructions

E. Letter Certifying to Interview Validation

F. Code Sheets

G. Curriculum Vitae of Dr. Robert C. Sorensen

H. Legal cases in which Dr. Sorensen has offered expert testimony in court and/or deposition 1992-1998

I. TABLES OF INFORMATION
Tables 1A-7A
Tables 1B-7B
Marginals

I. BACKGROUND AND PURPOSE OF STUDY

A question has arisen concerning the trademark significance, if any, of certain visible elements, i.e., rectangular tubing, of a marine keel cooler manufactured by R.W. Fernstrum & Company ("Fernstrum") in connection not only with its application for federal trademark registration, but also in certain pending civil actions involving Fernstrum. This question addressed by this survey arose from allegations by Fernstrum that certain other companies had begun manufacturing and selling marine keel coolers possessing rectangular tubing that rendered them confusingly similar in appearance to those keel coolers manufactured and sold by Fernstrum.

The critical group (population) that has played, and continues to play, an important role in the marketplace relationships between Fernstrum and any other company manufacturing and selling keel coolers, are those persons and their companies who specify, recommend, buy, or install keel coolers for inboard boat engines.

The salient purpose of this study was three-fold:

(1) To learn whether or not and, if so, to what extent, members of the above defined relevant population identify and associate the appearance of the Fernstrum keel cooler tubing with a single particular source;

(2) If so, to ascertain what company source and brand identifications, if any, are made in any source attributions offered by members of this population on the basis of seeing unlabelled untitled photographs of the tubing portion of the

Fernstrum keel cooler; and

(3) To determine what, if any, explanations these respondents offer for the source and brand identifications they make when they see the Fernstrum keel cooler tubing.

Sorensen Marketing/Management Corporation, a market research and marketing counsel firm in New York, New York was retained in early 1998 by Samuel D. Littlepage, Esq. of Dickinson Wright, PLLC in Washington, D.C. to design, implement and report on this study with the direct involvement and supervision of Dr. Robert C. Sorensen who also prepared this Report.

The *Curriculum Vitae* for Dr. Sorensen, including his publications of the past ten years, is appended to this Survey Report as Exhibit G.

The cases in which Dr. Sorensen has offered deposition or courtroom expert testimony during the past six years are listed in Exhibit H appended to this Survey Report.

The fees and costs of this survey, including $26,527.36 paid to the field data base and interviewing organization for its time and travel expenses in five states, total $57,268.55 with the submission of this Report and appended Exhibits.

II. STUDY METHODS

A. Defined population (the universe) and sampling technique

The population identified for this study was defined as persons who during the past two years have personally been involved in specifying, recommending, buying, or installing any keel

coolers. Some respondents suggested they had sold, replaced, repaired, and/or provided maintenance service on new or used marine keel coolers. All such persons and their companies are marketing targets for companies manufacturing and distributing keel coolers.

For purposes of this survey, Dr. Sorensen retained Mr. Edward D. Fry of Edward Fry & Associates, Inc., a research and consulting company in the boat building and maintenance industry, to prepare a data base of all known companies located in the southern area of the United States bordering on the Gulf of Mexico that would fit the above listed specifications. The resulting data base listed nearly two hundred (200) such companies in five states, i.e., Alabama, Florida, Louisiana, Mississippi, and Texas. This list of companies was then approved by Dr. Sorensen for market research purposes.

Because these companies are targeted by a variety of keel cooler manufacturers, and because all such companies were wanted for this data base of prospective survey respondents, no criteria were either specified or implemented in the provision of company names. Thus no pruning or special selection of any company took place. No other company attributes were specified such as size, dollar sales, or product specialties.

In conversation with Mr. Littlepage, counsel for Fernstrum, Dr. Sorensen required and obliged counsel and Fernstrum not to inform or in any way suggest to any company or person on any list that a survey was to be conducted, or that a party had been or might be interviewed, what the interview was about, or that it had

anything to do with litigation. Mr. Fry and Mr. Littlepage were neither introduced to nor in communication with one another. Moreover, Dr. Sorensen made it abundantly clear that under no circumstances would he inform anyone before or after the survey was completed, of his interviewer's determination of which companies to contact, or the names of the persons therein qualified for interview, or the identity of any companies and persons contacted, or what anyone from a participating company had to say to the interviewers. It was also understood that the interviewing organization retained by the Sorensen firm would make the actual selection of companies for interview without Dr. Sorensen's knowledge or input other than his request for a systematic effort to complete one hundred fifty (150) interviews from the data base the interviewing organization developed.

The population was sampled on an intercept interview basis through the aforementioned company lists, sometimes first by telephone and other times by "drop-in" contact when the interviewer was in the vicinity of the company site. Additional persons were contacted but not interviewed because of their failure to qualify for the sample or because of their stated unwillingness or lack of time to participate.

The sample from the defined population is not depicted as a probability sample because its members did not have an equal or known chance of being selected for interview. But because the questionnaires were very carefully designed, the interviewing procedure well defined, the sample drawn from a variety of

locations in a five states region, and the results of the stimuli clearly indicating majorities in salient responses, it is appropriate to infer that the results of a larger probability sample would not differ significantly from those obtained from this survey except for reason of potential sampling error beyond our control.

B. Sample characteristics (Tables 4A-7A and 4B-7B)

Respondents were distributed geographically among the five states territory depending on how they "fell". The five states and the percentages of the 150 completed interviews from each are as follows (Tables 7A and 7B):

State	
Alabama	20.7%
Florida	07.3%
Louisiana	47.3%
Mississippi	07.3%
Texas	17.3%

Tables 4A and 4B indicate that 96.0% of total survey respondents were males and 4.0% were females. (Question 4a)

All respondents were asked Question 4b concerning their age: 12.7% were under 21 to 34 years of age; 46.7% were 35 to 49 years of age; and 40.7% were 50 years of age and over. (Tables 4A and 4B)

Tables 5A and 5B tabulate for all respondents "How many years have you been involved in specifying, recommending, buying, or

installing keel coolers?" (Question 5a), and Tables 6A and 6B answer for all respondents "What is your position with the company?" (Question 6).

C. The interview questionnaires and photographs

Dr. Sorensen designed the Screener Questionnaire (Exhibit A) and the Main Questionnaire. (Exhibit B) The purpose of the Screener Questionnaire in the sample selection process was to determine whether or not a prospective respondent in fact qualified as a member of the defined population in accordance with the above mentioned specifications. The Main Questionnaire consists of the definitive interview questions that address the survey's purpose set forth above.

A set of three (3) four-color photographs of the unlabelled Fernstrum keel cooler tubing from different angles were produced in accordance with Dr. Sorensen's specifications. The three photographs, appended collectively hereto as Exhibit C, were referred to in Question 1 which reads, in part: "Please look at these photographs taken from different angles of the same keel cooler one by one as I hand each to you and then lay them down in front of you. Look these photos over as you would if you were examining them in a catalog or brochure."

All respondents were told in Question 1 before the first query in the Main Questionnaire: "Now if you can't answer a question in this interview, it's okay to tell me so." (Exhibit B, page 1)

D. Interviewer instructions

Dr. Sorensen personally prepared three pages of detailed instructions for the field interviewer (Exhibit E). He further conducted a telephone briefing session and was available for questions by telephone.

These instructions provide basic ground rules for contacting people for interview, as well as how to screen respondents to be sure they are members of the appropriate universe and meet other quota screening specifications. They set forth rules, prohibitions and procedures; and they deal with critical matters such as assurance of confidentiality and what to say about the survey and its purpose. Moreover, Dr. Sorensen and his office were in frequent touch with the various interviewer supervisors.

E. Interviewer affirmation and interview validation

Interviewers were instructed to ask all questions in each Screener and Main Questionnaire exactly as they were printed, and interviewers were required to record accurately the respondent's complete answers to the questions in the Main Questionnaire. Each interviewer was asked to attest that she or he had selected and interviewed the indicated respondent in the listed company and had fully complied with the aforementioned interviewer instructions in conducting the interview. Thus, in the closing paragraph of each questionnaire, the responsible interviewer was required to sign and date the following certification: "This is to affirm that I have interviewed the above named respondent to the best of my ability in

accordance with the interviewing briefing instructions and that I recorded, as fully and accurately as possible, all of this respondent's answers to the above questions on the date below."

Moreover, 15.3% of the interviewer's work was validated by an independent organization, The Wats Room, Inc., an organization that specializes in telephone interviewing and telephone validations of survey interviews. This organization made its own random selection of respondents with whom survey questionnaires were completed and telephoned these persons for confirmation that the interview had taken place. As attested in a letter from the project manager, no difficulty was encountered. (Exhibit E) In this same appended exhibit is a copy of the script used in the conversation between validator-interviewer and each respondent contacted.

F. Coding and tabulating procedures

Dr. Sorensen personally read each one of the one hundred-fifty (150) completed questionnaires containing the answers to the questions. Answers to questions asked in an interview and recorded on a questionnaire must be broken down into identifiable categories of words, themes and names so that they can be quantified and thus counted, tabulated and analyzed. Some of these content categories already exist as "pre-coded" answers to closed-end questions that dictate known predictable factual specifics such as gender or age group answers. Other content categories are word and thematic content in answers to open-end questions and identified for use in quantifying each respondent's replies to the survey questions.

Using a code structure, the contents of all answers are examined and broken down into the specified categories utilized in Part III-STUDY FINDINGS and Exhibit I-TABLES OF INFORMATION of this final Report. This coding operation includes the assignment of a specific code number to each unit of content designated by specific words or themes. The coding analyst records the appropriate code numbers representing the corresponding open-ended answer on each questionnaire.

The raw data now in numerical form were then converted under Dr. Sorensen's direction to computer tables that appear herein as Exhibit I-TABLES OF INFORMATION. These tables, 1A through 7A and 1B through 7B consist of cross-tabulations of salient data and the "Marginals" which include literally the quantification of the entire answer data coded and tabulated by each one of the subject codes. "Code Sheets" which can be used to read the "Marginals" are appended hereto as Exhibit F.

G. Non-mention of litigation implications of study

The survey interviewer was not informed by Dr. Sorensen that the survey was being conducted for possible use in litigation or the name of the party in whose behalf the survey was being conducted. Moreover, the interviewer instructions and the interview questionnaire were designed to avoid providing any suggestions to survey respondents about who the survey sponsor or interested parties might be.

III. STUDY FINDINGS

A. Whether or not the keel cooler was manufactured by one company or more than one company (Tables 1A and 1B)

Special Note: The contents of this section are keyed to all tables and "marginals" located in Exhibit I.

As earlier indicated, Question 1 dealt with the introduction and display of three photographs of the same unmarked Fernstrum keel cooler tubing to all survey respondents. The three color photographs remained in front of the respondents until all questions concerning the keel cooler had been asked and answered.

All survey respondents were asked Question 2a: "Do you believe the same keel cooler shown in these three pictures is manufactured by one company or more than one company?" 57.3% of total survey respondents said "One company" when viewing the picture of the Fernstrum keel cooler tubing, 32.0% said "More than one company", and 10.7% said "Don't know" or "Not sure".

All survey respondents, regardless of their answer to Question 2a, were asked Question 2b: "What causes you to say that?"

20.9% of all respondents answering "One company" (12.0% of total survey respondents) made a comment bearing on the design and appearance of the keel cooler tubing they were viewing as the reason for their "One company" answer. Another same number and percentage of people, 20.9% of all respondents answering "One company" (12.0% of total survey respondents), referred to their knowledge of the field and their experience. 36.0% of those saying

"One company" (20.7% of total survey respondents) said that they only knew of one company making a keel cooler with the shape of tubing they were looking at.

Reasons given by respondents saying "More than one company" were scattered, the largest number-37.5% of those saying "More than one company (12.0% of total survey respondents) answering "Have more than one supplier/know of more than one manufacturer". One respondent referred to "Shape/design", another to "Standard keel cooler design" and 3 said they are "Aware that this design is copied".

B. Company source name identifications (Tables 2A and 2B)

All respondents, no matter what their answer to Questions 2a and 2b were asked Question 3a: "What do you believe is the name of the company ("companies" if respondent said "more than one company" in answer to Q. 2a) that manufacture(s) the keel cooler shown in the pictures you are looking at?"

No respondent replied "Don't know/not sure" to this question; 3.3% of total survey respondents said "Photographs provide insufficient I.D. information".

A net unduplicated 81.3% of total survey respondents made a Fernstrum company identification. Broken down, 78.7% of total survey respondents said "Fernstrum/R.W. Fernstrum", 2.7% said "Fernstrum Gridcooler" and 1.3% said "Gridcooler". (Note: GRIDCOOLER is the registered word trademark for the keel cooler product made and sold by Fernstrum.)

In addition, 3.3% of total survey respondents said "East Park Radiator/East Park", 1.3% said "Donovan Marine", 2.7% said "Duramax/Duramax Marine", and 7.3% said "Johnson/Johnson Marine". A substantial portion of respondents making these identifications, adding to 14.6% of total survey respondents, can be inferred as persons who would otherwise have made a Fernstrum identification if these four companies' keel cooler products had not existed, given what has been represented to me as the substantially identical overall shape, elements and appearance of these companies' respective products to those attributes of the Fernstrum keel cooler.

These Fernstrum source attributions to other brand named keel cooler products by respondents viewing the Fernstrum rectangular tubing indicate these respondents' confusion of the Fernstrum source with the sources of these other competing keel coolers utilizing the rectangular tubing.

No respondent cited "Johnson Rubber" or "Walter/Walter Machine", two companies which make a keel cooler with cylindrical or "round" tubing.

A net unduplicated 54.7% of total survey respondents, i.e., 95.3% of all survey respondents who had answered "One company", said "Fernstrum/R.W. Fernstrum" (including one person saying "Fernstrum Gridcooler") is the name of the company manufacturing the keel cooler shown them in the picture. No other company or brand name was mentioned by those who had answered "One company".

A net unduplicated 23.3% of total survey respondents, i.e.,

72.9% of all survey respondents who had answered "More than one company" made the Fernstrum identification. Among those saying "More than one company", 66.7% (an additional 21.3% of total survey respondents) said "Fernstrum/R.W. Fernstrum", 6.3% (an additional 2.0% of total survey respondents) said "Fernstrum Gridcooler", 4.2% (an additional 1.3% of total survey respondents) said "Gridcooler". As indicated in the preceding paragraph, all of the tabulated four non-Fernstrum source name identifications were made by respondents who had said the keel cooler they were viewing was made by "More than one company". (Table 2A)

C. Reasons for company source name identifications (Tables 3A and 3B)

All survey respondents were asked Question 3b for whatever company name or names they had previously cited: "What, if anything, in these pictures, causes you to say that?", followed by Question 3c: "Anything else?" The answers to these two questions are grouped and analyzed together.

The reasons given for a specific source name identification centered on the perceived design of the keel cooler tubing that respondents were seeing in the photographs. The largest number of reasons, given as an explanation for the "Fernstrum" company name identification by a net unduplicated 68.7% of total survey respondents, are grouped in three categories and break down as follows in the tabulation of individual reasons: 25.3% of total survey respondents (31.1% of all those identifying the keel cooler

as Fernstrum said Fernstrum for reason of "Shape/design"; 16.0% (19.7%) - "Rectangular 'grid' form"; and 46.7% (57.4%) - "Rectangular/square 'tubes'/shape of 'tubes'".

A few respondents who gave any one of these three explanations for the company they identified as a manufacturer of the keel cooler they were viewing named a company other than Fernstrum. Of the 5 persons (3.3% of total survey respondents) naming "East Park Radiator/East Park" as one of the sources, 1 said "Shape/design", 1 said "Rectangular 'grid' form", and 3 said "Rectangular/square 'tubes'/shape of 'tubes'". Of the 2 persons (1.3% of total survey respondents) who had named "Donovan Marine" as one of the sources, 1 said "Shape/design" and 1 said "Rectangular 'grid' form". Of the 4 persons (2.7% of total survey respondents) who had named "Duramax/Duramax, Inc.", all 4 said "Rectangular/square 'tubes'/shape of 'tubes'". Of the 11 persons (7.3% of total survey respondents) naming "Johnson/Johnson Marine" as one of the sources, 2 said "Shape/design", 1 said "Rectangular 'grid' form", and 9 said "Rectangular/square 'tubes'/shape of 'tubes'".

The reasons given for the mistaken source identifications of sources other than "Fernstrum" embody in substantial numbers the shape and appearance of the keel cooler rectangular tubing respondents were viewing.

IV. CONCLUSIONS

On the basis of findings from a survey of a representative sample of the defined relevant population of people dealing with

keel coolers, the following is clear:

1. 57.3% of the above-named relevant population, when viewing three photographs of Fernstrum keel cooler tubing, unmarked and unlabelled, believed that the keel cooler with this tubing is manufactured by one company.

2. The largest number of reasons given for the one company source identification--as opposed to more than one company--centered on references to appearance and to people's knowledge of the field or their experience.

3. A net unduplicated 81.3% of total survey respondents made a Fernstrum company identification. Broken down, 78.7% of total survey respondents said "Fernstrum/R.W. Fernstrum", 2.7% said "Fernstrum Gridcooler" and 1.3% said "Gridcooler".

4. It is likely that still other respondents would have made a Fernstrum source identification had they not erroneously identified other sources of a keel cooler that is substantially the same in visible elements and appearance as that made by Fernstrum.

5. 54.7% of total survey respondents, i.e., 95.3% of all survey respondents who had answered "One company", made a "Fernstrum/R.W. Fernstrum" source identification including one person saying "Fernstrum Gridcooler". No other company or brand name was mentioned by those who had answered "One company".

6. No respondent cited either "Walter/Walter Machine" or "Johnson Rubber" companies. Neither of these two companies makes nor markets a keel cooler with rectangular tubing that is similar to that of the Fernstrum keel cooler.

7. The largest number of reasons given for the "Fernstrum" source identification, offered by a net unduplicated 68.7% of total survey respondents are grouped in three categories: "Shape/design", "Rectangular 'grid' form" and "Rectangular/square 'tubes'/shape of 'tubes'". Moreover, only a few of the people who gave any one of these three explanations for the company they identified as a manufacturer named a company other than Fernstrum.

8. Confusion of the source of other keel cooler products having rectangular tubing with the Fernstrum keel cooler was indicated by respondents erroneously citing the non-Fernstrum products by name and referring to their rectangular tubing as their reasons for doing so.

9. For these reasons, it is clear that a high incidence of attribution or secondary meaning exists for Fernstrum with respect to the visual elements and appearance of its keel cooler tubing and, thus, for the Fernstrum keel cooler product itself.

September 1, 1998 — Robert C. Swanson

EXHIBITS A THROUGH I

SORENSEN MARKETING/MANAGEMENT CORPORATION
SMMC - SDL - APRIL 1998

Qst. #:_____ 5-8
Int. #:_____ 9/
Survey #_____ 10
Area :_____ 11/

BOAT SURVEY

SCREENER QUESTIONNAIRE (USE PEN ONLY)

1. Hello, I'm (MY NAME) from (BLANK), a market research company. We're conducting a study in this area and I would like to ask you a few quick questions. We are ABSOLUTELY not selling or promoting any products.

2. We're talking about different boating items with different people. During the past two (2) years, have you personally been involved in specifying, recommending, buying, or installing any one of the following three items for any boat that you or your company is building, maintaining or repairing? Please do not guess. Tell me "Yes" or "No" or "Don't know" for each of the following: **READ ENTIRE LIST, BUT GET ANSWER FOR EACH ITEM BEFORE ASKING ABOUT NEXT ITEM.**

(1) Propellers and prop shafts?
(2) A keel cooler?
(3) A generator set?

IF RESPONDENT ANSWERS "YES" TO Q.2. (2), "A KEEL COOLER", GO TO Q. 4. IF OTHERWISE, GO TO Q. 3.

3. Still talking about these different boating items, do you believe that over the next six months you will or will not be personally responsible for specifying, recommending, buying or installing any one of the following three items for any boat that you or your company is building, maintaining or repairing? Again please do not guess. Just tell me "I believe I will" or "I believe I won't" or "I have no opinion". about any one of the following three items I'm going to read to you. **READ ENTIRE LIST, BUT GET ANSWER FOR EACH ITEM BEFORE ASKING ABOUT NEXT ITEM.**

(1) Propellers and prop shafts?
(2) A keel cooler?
(3) A generator set?

IF RESPONDENT ANSWERS "YES" TO Q.3, "A KEEL COOLER", GO TO Q. 4. IF OTHERWISE, TERMINATE AND RECORD BELOW

NOT QUALIFIED RE KEEL COOLER IN QUESTIONS 2 AND 3

01 02 03 04 05 06 07 08 09 10 11 12 13 14 15

4. Have you been interviewed in a market research survey any time in the last two months?

TERMINATE AND RECORD BELOW	YES
GO TO Q 5A	DON'T KNOW
TERMINATE AND RECORD BELOW	NO

PROBLEM WITH PAST MARKET RESEARCH INTERVIEW

01 02 03 04 05 06 07 08 09 10 11 12 13 14 15

5a. Do you generally wear eye glasses or contacts when you are carefully examining photographs of products such as those we discussed?

GO TO Q 5b	YES
GO TO Q 6	NO
GO TO Q 5b	DK/NS

5b. **IF "YES" T0 Q 5a.** Can you please wear your glasses (contacts) during the rest of this interview? Thank you.

GO TO Q 6	YES
TERMINATE AND RECORD BELOW	NO
TERMINATE AND RECORD BELOW	DK/NS

PROBLEM WITH EYE GLASSES/CONTACTS

01 02 03 04 05 06 07 08 09 10 11 12 13 14 15

6. **DO NOT ASK: IF RESPONDENT APPEARS TO HAVE ANY LANGUAGE, HEARING, OR READING DIFFICULTIES, OR APPEARS TO BE IN A HURRY, TERMINATE AND RECORD BELOW**

LANGUAGE/HEARING/READING/TIME DIFFICULTIES

01 02 03 04 05 06 07 08 09 10 11 12 13 14 15

7. Now I have only a few more questions where I need to show you some items. **IF NOW AT SITE.** Can we go some place here that is private with a desk or table so I can lay down some items for you to look at? **IF TELEPHONING.** Can we arrange a time today or tomorrow, when I can visit you at your work or home, where we can go some place private with a desk or table, so I can day down some items for you to look at? **IF "NO", TERMINATE AND RECORD.**

UNWILLING TO BE INTERVIEWED FURTHER

01 02 03 04 05 06 07 08 09 10 11 12 13 14 15

Exhibit B

Int. #: _____ 9/
Survey #: _____ 10/
Area:_____ 11/

MAIN QUESTIONNAIRE

BOAT SURVEY

1. **Hand each of three pictures one by one to respondent in order beginning with encircled item. (1)"A", (2)"K" and (3)"X". Continue asking this question:** Please look at these photographs taken from different angles of the same keel cooler one by one as I hand each to you and then lay them down in front of you. Look these photos over as you would if you were examining them in a catalogue or brochure. Now, if you can't answer a question in this interview, it's okay to tell me so. Pick up any of these photographs and look at them if you like. Tell me when you're ready for a couple of questions.

2a. Do you believe the same keel cooler shown in these three pictures is manufactured by one company or more than one company?

One company	12/1
More than one company	/2
DK/NS	/3

2b. What causes you to say that? _____ 13/

_____ 14/

3a. What do you believe is the name of the company (companies **if respondent said "more than one company" in answer to Q2a)** that manufactures the keel cooler shown in the pictures you are looking at?

_____ 15/

_____ 16/

3b. **Ask and indicate answer for whatever company mentioned** What, if anything, in these pictures, causes you tosay that?

_____ 17/

_____ 18/

3c. Anything else?_____ 19/

_____ 20/

TAKE BACK AND CONCEAL PICTURES

4a. **Indicate (encircle code)**

Male	21/1
Female	/2

4b. Just so we can divide our interviewees into groups, will you please tell me which one of these age groups you are in? **Read out loud and indicate.**

21 to 34?	22/1
35 to 49?	/2
50 and over?	/3
Refused all ages	/4

5a. For about how many years have you been involved with specifying, recommending, buying, or installing keel coolers?

_____ 23-24

5b. Which are you most involved with: specifying, recommending, buying, or installing keel coolers?

Specifying	25/1
Recommending	/2
Buying	/3
Installing	/4

6. What is your position with your company?_____ 26-27

7. Just in case my supervisor wants to check that we had this interview, will you please let me reconfirm your name, address and telephone number? This information is confidential and we are not selling or promoting any products. Thank you very much for your help. We would appreciate your not mentioning this interview to anyone.

RESPONDENT'S NAME: _____

COMPANY NAME: _____

ADDRESS: _____

CITY: _____ STATE:_____

TELEPHONE:_____ ZIP CODE: _____ 28-32

8. Thank you for your cooperation. ZIP CODE DK/NS 33/

To be signed by the interviewer: This is to affirm that I have interviewed the above named respondent to the best of my ability in accordance with the interviewing briefing instructions and that I recorded, as fully and accurately as possible, all of this respondent's answers to the above questions on the date below.

Interviewer's full name (no initials):

Name: _____ **Date:** _____

Exhibit C

SURVEY PHOTOGRAPHS

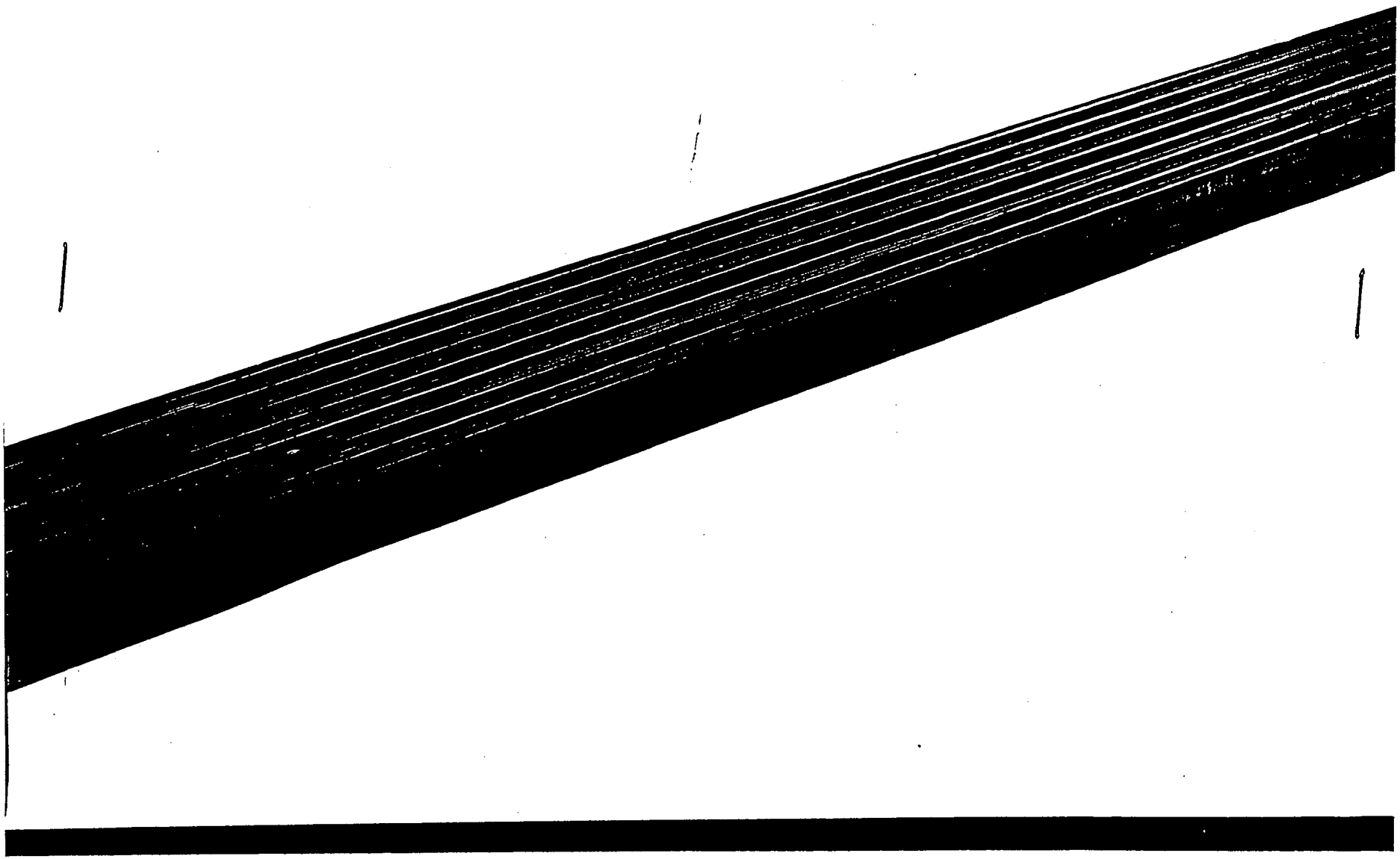

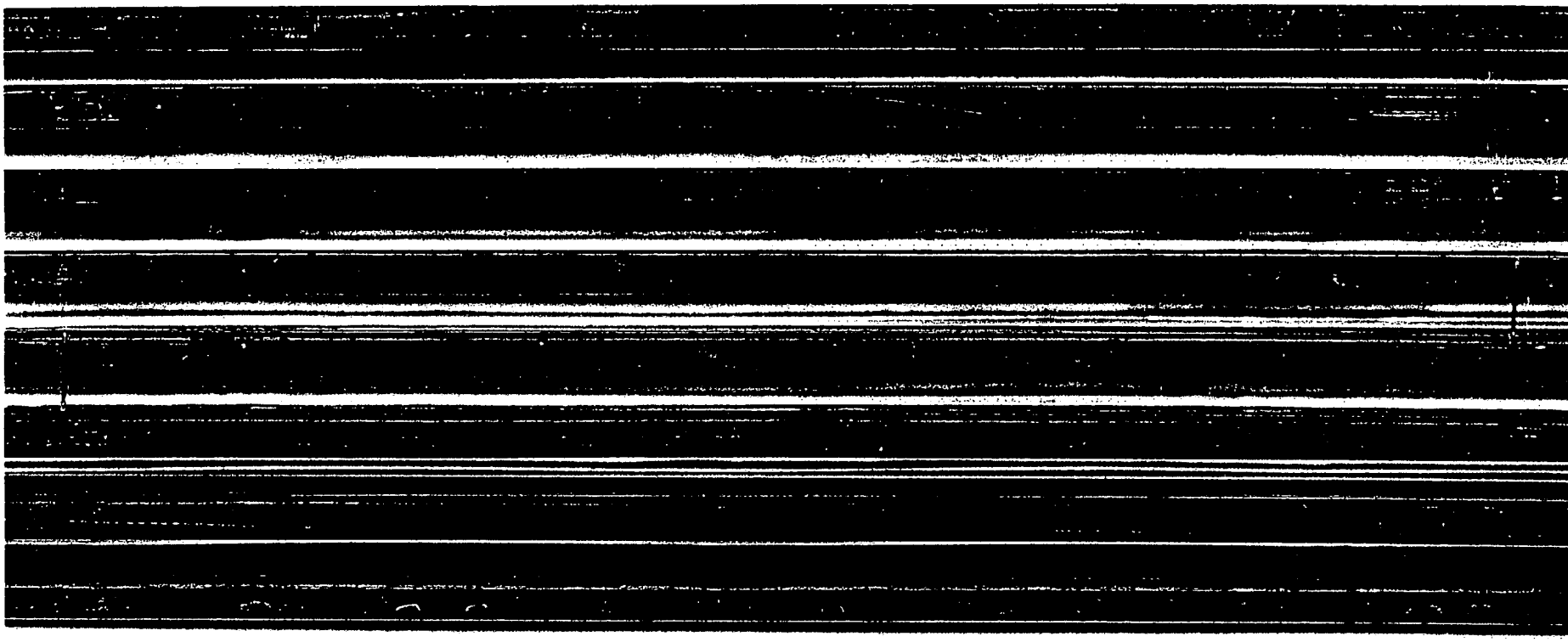

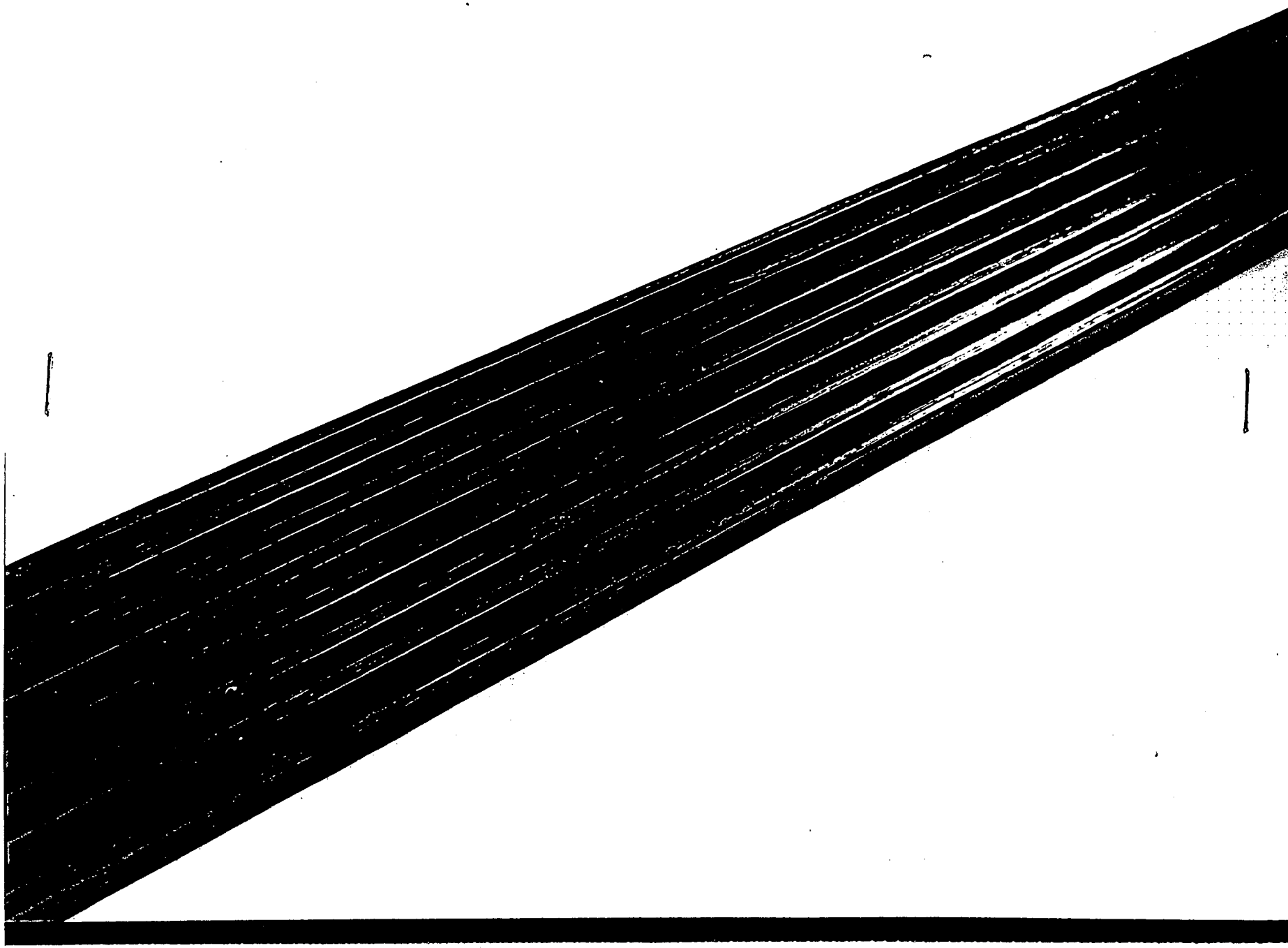

Exhibit D

SORENSEN MARKETING/MANAGEMENT CORPORATION
SMMC - SDL - APRIL 1998 *Strictly Confidential*

GENERAL INSTRUCTIONS - BOAT SURVEY STUDY

Thank you for working with us on this study. I appreciate your care and professionalism in this study because careful attention to detail and getting every word down is very important to us. Please keep and read these instructions carefully. Sign the "Briefing Attendance List" before you begin your interviewing. You are interviewer #1. Any other interviewer on this project must sign the attendance sheet as well, using the number on the "sign-in" line as his interviewer number. Every interviewer must have a copy of these instructions in hand before and during a survey briefing.

In this survey we will consider an interview as completed only if the respondent has been taken through the entire Screener Questionnaire and Main Questionnaire. The purpose of this survey is to learn more about people's reactions to three photographs of the same boat keel cooler.

RESPONDENT QUOTAS

150 completed interviews (Screeners and Main Questionnaires) are required from the sample provided you.

RESPONDENT CONTACT, ESTABLISHING RAPPORT, AND OTHER PROCEDURES

1. Please do not try to interview anyone who seems to be in a big hurry or is not willing to be interviewed. Don't hesitate to terminate the interview under these circumstances. On the other hand, see if the person can be qualified so that an effective interview can be conducted on another occasion.

2. If any respondent is hesitant about answering any of the questions, make it very clear that you are "not selling or promoting any thing" and that "this not a test".

3. You can also truthfully say that you don't know what the sponsor wants to know except "to learn more about the opinions of people who work with boats as defined in our Screening questions".

4. You can certainly tell people that this study is confidential and that every individual response will be combined together in a computerized total. We are not interested in keeping information about what any one individual thinks. Respondents' names and company affiliations are strictly confidential!!

5. Although this is a very unlikely possibility, do not interview a member of your family or a friend or relative. The person you interview must not be someone you personally know.

6. Never interview a person if anyone else is present with him/her. You can always request the person to be alone in the room with you during your interview.

7. The questionnaires and questions are constructed for a steady-paced interview, but don't encourage respondents to give thoughtless answers. We are asking for spontaneous responses, regardless of what experience or expertise the respondent may have

8. Particularly in this survey, it is essential that you be as full and accurate as possible in recording the respondent's answers to the questions in this questionnaire. Record the respondent's full answers to any open ended questions in his/her own words. Do not condense, summarize, paraphrase or abbreviate!

9. If you are asked who is sponsoring this study, make the truth clear: you do not know.

10. Write down the name of each individual for whom you have completed a Screener and Main Questionnaire on the validation form which has been issued to you. If there is an additional interviewer, each validation form must contain the work of only one interviewer. Be sure the top right-hand corner portion of each validation form is filled in, except for the "Supervisor's Name". Disregard the top left-hand corner portion if all interviews are from the same metropolitan area. Do not fill in the left hand column entitled "VAL. INT'S. NAME", but be sure to fill in the respondent's name, respondent's telephone number, date of interview, and Quest.# (interview number) for each completed interview.

11. The validation form, as well as the sign-in sheet, Screener Questionnaire and Main Questionnaire forms must be filled out with a dark black or blue ball point pen -- NOT in pencil. If anything you have written on any form must be changed, e.g., the respondent's name, draw a neat line through what you are changing and write a correction above or in a nearby margin or on the back of the form you are using. (Indicate whenever you go to the back of the page!) Erasures or ink blot-outs on any of these forms will require the entire interview to be rejected by our office.

USING THE QUESTIONNAIRES

Detailed instructions for the asking of each question are set forth in the screening and main portions of the questionnaires themselves. It is urgent that you follow them carefully and accurately. The following are important additional instructions:

1. Each interviewer need only use one Screener Questionnaire. A separate record must be kept of all interview terminations.

2. Each Main Questionnaire is numbered. If any replacement Main Questionnaire is needed, a blank questionnaire must be used for the replacement interview, numbered exactly the same as the replaced questionnaire, and stapled on top of the replaced questionnaire.

3. Even if a respondent asks, do not define any word or explain any name. If you are pushed on this, you can only say: "I'm sorry; I am not supposed to say anything other than to ask questions."

4. If the respondent does not understand a question, do not explain it in your own words or re-word it; just re-read the question as it appears in the questionnaire. If the respondent wants to change an answer to any question, indicate the question number and additional comment or newly revised answer on your questionnaire form. DO NOT eliminate or cross out the original answer under these circumstances.

5. Please read all questions to the respondent exactly as they are written. Do not add or subtract any words. You should have no opinion about what respondents are going to say, so please don't say anything or make sounds whose meaning is subject to any interpretation by the respondent other than your interest in her/him. <u>You must pay very careful attention to hearing and recording the respondent's answers.</u>

6. PROBING: We are asking you NOT to probe responses in the usual sense of seeking to learn everything in the respondent's mind relative to your interview question. We want their spontaneous reactions fully recorded. BUT: It is vital that you ask a respondent "Please explain your answer." or "Tell me what you mean." or "Why do you say that?" when you perceive the answer is unclear. Be sure to write down any probe question that you had to put to the respondent. Questionnaires that fail to reflect needed probing of this sort will NOT be accepted by our firm and will need to be replaced by you.

7. Where a person makes a comment even in reply to a closed-end question, please write it somewhere on your questionnaire page for that interview, indicating the question number to which it applies.

8. <u>IMPORTANT</u>: Sign each Main Questionnaire with your full name (no initials).

9. Also important!! Please write clearly. We are unable to accept questionnaires with answers that are even partly unreadable.

PLEASE BE SURE TO REFER ANY QUESTIONS IMMEDIATELY TO ROBERT SORENSEN OR COLIN SCOTT BY PHONE OR FAX. Do not give out any company name but your own. Thank you!!

Exhibit E

THE WATS ROOM, INC.
18 RAILROAD AVENUE
ROCHELLE PARK, NJ 07662
Tel (201) 845–3100 Fax (201) 845-3131
e-mail: awilson@twri.com

June 12, 1998

Dr. Robert C. Sorensen, President
Sorensen Marketing / Management
Corporation
50 East 77nd Street
New York City, NY 10021-1836

Dear Dr. Sorensen:

This is to certify that The Wats Room, Inc., an independent Interviewer service, has completed validation of the Boat Survey. Our interviewers established contact with 23 respondents at the telephone numbers listed on the validation forms. These respondents were chosen solely and randomly by The Wats Room, Inc. This represents fifteen per cent of each interviewer's work.

Our interviewers asked all of the following validation questions and accurately noted the responses thereto. Each telephone validator initialed the individual's telephone validation space, recorded the responses and ascertained that there were no problems.

The questions asked are as follows:

1. Did you participate in an interview at your office or workplace about keel coolers for boats?

   YES 23 NO 0 DK 0

2. The people who participated in the interview were shown color photographs of sections of keel coolers and asked questions about them. Do you recall that interview?

   YES 23 NO 0 DK 0

SINCERELY,

Ann Wilson

Ann Wilson
Project Manager

Exhibit F

BOAT SURVEY
CODE SHEETS

5-8	Questionnaire #
9	Interviewer #
10/	Survey #
11/1	Alabama
/2	Florida
/3	Louisiana
/4	Mississippi
/5	Texas

Q 1. Respondent is shown three photographs of the same keel cooler and asked to examine them as if in a catalogue or brochure.

Q 2a. Do you believe the same keel cooler shown in these three pictures is manufactured by one company or by more than one company?

12/1	One company
/2	More than one company
/3	Don't know/not sure

Q 2b. What causes you to say that?

13/1	General appearance
/2	Shape/design
/3	Shape/design is unique
/4	Materials from which cooler is fabricated
/5	Standard keel cooler design
/6	Knowledge of field/experience
/7	Rectangular/square 'tubes'
/8	Only one company has rectangular 'grid' design/other brands have different designs
/9	Typical Fernstrum design
/0	Aware that this design is copied

14/1 Only know of one company/the only company I know
/2 Use this type/brand of cooler/Only type/brand used
/3 Most commonly used cooler
/4 Have seen magazine advertisements, catalogs, etc.
/5 Other coolers/makers have similar designs
/6 Have more than one supplier/know of more than one manufacturer
/7 Photographs provide insufficient information for identification
/8 Other
/9 Miscellaneous
/0 Don't know/not sure
/X Other brands use round/cylindrical 'tubes'
/Y Photographs appear to show same cooler

Q 3a. What do you believe is the name of the company/companies that manufactures the keel cooler shown in the pictures?

15/1 Donovan Marine
/2 Duramax/Duramax Marine
/3 East Park Radiator/East Park
/4 Fernstrum/R.W. Fernstrum
/5 Fernstrum Gridcooler
/6 Gridcooler
/7 Johnson/Johnson Marine
/8 Johnson Rubber
/9 Photographs provide insufficient I.D. information

16/1 Walter/Walter Machine
/8 Other
/9 Miscellaneous
/0 Don't know/not sure

Q 3b/c. What causes you to say that?

17/1 Shape/design
/2 Materials from which cooler is fabricated
/3 Color
/4 Rectangular 'grid' form
/5 Rectangular copper/brass/alloy design
/6 Rectangular/square 'tubes'/shape of 'tubes'
/7 Other brands use round/cylindrical tubes
/8 Photographs appear to show same cooler
/9 Most commonly used cooler
/0 Have seen magazine advertisements

18/1 Minimal/non involvement in brand purchase/specifications
/6 Fernstrum is principal manufacturer/Fernstrum is standard
/7 Use Fernstrum all the time
/8 Aware of Fernstrum 'knock-offs'
/9 Looks like Fernstrum design
/0 Have installed many of these

19/1 Looks like the coolers we use
/2 Mainly use inboard coolers
/3 Photographs provide insufficient I.D.
/4 It is a gridcooler
/5 Only Fernstrum has this design
/6 Install brand supplied with engine

20/8 Other
/9 Miscellaneous
/0 Don't know/not sure

Q 4a.

21/1 Male
/2 Female

Q 4b.

22/1 21 to 34
/2 35 to 49
/3 50 and over
/4 Refused all ages

Q 5a. How many years have you been involved in specifying, recommending, buying, or installing keel coolers?

23/1 Less than 1 year
/2 1 to 3 years
/3 4 to 6 years
/4 7 to 9 years
/5 10 to 12 years
/6 13 to 15 years
/7 16 to 18 years
/8 19 to 21 years
/9 22 to 24 years
/0 25 to 27 years

24/1 28 to 30 years
/2 31 to 33 years
/3 34 to 36 years
/4 37 to 39 years
/5 40 to 42 years
/6 43 to 45 years
/7 46 to 48 years
/8 Other
/9 Miscellaneous
/0 Don't know/not sure

Q 5b. Which are you most involved with: Specifying, recommending, buying, or installing keel coolers?

25/1 Specifying
/2 Recommending
/3 Buying
/4 Installing
/8 Other
/9 Miscellaneous
/0 Don't know/not sure

Q 6. What is your position with the company?

26/1 Owner
/2 President
/3 Vice-President
/4 Managing Director
/5 General Manager
/6 Program Manager
/7 Project Manager
/8 Engineering Manager
/9 Operations Manager
/0 Technical Manager

27/1 Supervisor
/2 Buyer/Purchaser/Estimator
/3 Foreman
/4 Superintendent
/5 Engineer
/6 Sales
/7 Naval Architect
/8 Other
/9 Miscellaneous
/0 Don't know/not sure

28-32	Zip Code
33/	Don't know Zip Code

Exhibit G

SORENSEN MARKETING/MANAGEMENT CORPORATION
50 EAST 77th STREET NEW YORK, NY 10021-1836
Tel (212) 879-5821 Fax (212) 879-5823 e-mail: mrktgsage@aol.com

ROBERT C. SORENSEN

CURRICULUM VITAE
As of February 1998

Profession: Marketing counsel and research/behavioral science; educator.

Education:

A.B. University of Chicago - 1944
Major: Sociology and Political Science

M.A. University of Chicago - 1948
Major: Sociology

Ph.D. University of Chicago - 1954
Major: Sociology (Social Psychology). Interdepartmental Majors: Mass Communications, Industrial Relations. Dissertation: The Role of Public Sentiment and Personal Prejudice in Criminal Jury Trials.

PRESENT AND PAST POSITIONS

President: Sorensen Marketing/Management Corporation: 1968-Present.

Provide analysis and information to meet specialized needs of institutional, corporate and law firm clients. Counsel for new product introduction, consumer behavior, marketing management, and acquisitions/mergers. Mass communications research and policy evaluation. Specialized counsel, research and expert testimony in intellectual property, advertising and anti-trust litigation. Research in change of venue, juror selection, and problems of proof. Testimony as expert market research/marketing witness in over 35 cases in United States District Courts and International Trade Commission.

Professor (Full, tenured) of Marketing, Rider University, Graduate and Undergraduate School of Business Administration: 1981 - 1993. Professor Emeritus since July 1993.

Taught courses in Market Research, Consumer Behavior, Marketing Management, Social Issues in Marketing, Creative Advertising, Advertising Principles, and Trademarks: Their Creation, Uses and Protection (a special topics course). Chairman: School of Business Academic Policy Committee (1990-92).

Vice President and Corporate Director of Marketing, Warner Communications, Inc., *now Time Warner*: 1972-74.

Directed studies and concerned with serving marketing and economic needs of this information and entertainment conglomerate.

Executive Director, The Center For Advanced Practice, The Interpublic Group of Companies, Inc.: 1966-68.

Member of interdisciplinary "think tank" group concerned with product development and new product introduction for major clients world wide. First publisher of Psychology Today magazine.

Vice President and Corporate Director of Research, D'Arcy Advertising Company (now D'Arcy-Masius-Benton & Bowles): 1961-66.

Supervised all marketing research in main office (New York City), policy direction concerning research in other offices throughout the country, and assistant to board chairman and chief executive officer.

Director of Research, This Week Magazine: 1959-61.

Responsible for al l marketing, media, and circulation research for Sunday Magazine supplement appearing in 14 million Sunday newspapers each week.

Director of Audience Research and Analysis, Radio Free Europe, Munich: 1954-59.

Organized and administered research into broadcasting effectiveness, audience characteristics and media content analysis concerning western broadcasts and other forms of political warfare communications to and in five East European countries.

Operations Analyst and Korean Team Leader, Operations Research Office of The Johns Hopkins University: 1952-54.

Member of interdisciplinary group concerned with applying the behavioral sciences to military economic and political problems. Team leader in Korea during Korean war concerned with recruitment and utilization of Korean civilians by U.S. Army.

Assistant Professor of Legislation, College of Law, University of Nebraska: 1948-52.

Only social scientist on law school faculty concerned with application of the social sciences to legal drafting, problems of proof, legal research projects, and expert testimony for all senior law students.

Visiting Lecturer in Sociology, Northwestern University: Summer 1948.

Director of the Prelegal Division and member of prelegal faculty (part-time), The John Marshall Law School: 1946-48.

Member: Editorial Board of The Trademark Reporter - 1990-92

Associate editor and Member of Publications Board: ZYGON: Journal of Religion and Science - Published by the Institute On Religion In An Age Of Science.

Current Member and/or Board Memberships:

American Association for the Advancement of Science
American Association for Public Opinion Research
American Marketing Association
American Sociological Association
Center for Advanced Studies in Religion and Science (Board Member)
Center for Learning and Living of Marymount Manhattan College (Facilitator)
The Dutch Treat Club
Institute on Religion in an Age of Science (Vice President and ex officio Council Member)
International Trademark Association
Marketing Research Association
Market Research Council
Childreach/Plan International - Formerly: Foster Parents Plan. (Past International Board Member and Chairman; present U.S. Board/Executive Committee Member and Past Chairman of Marketing Committee)
Scandinavian Seminar (Board Member and past Chairman)
Scandinavian Seminar College, Copenhagen (Past Board Member)
The University Club

Lecturer to many groups

Biographical Listings:

American Men and Women of Science (1973)
Who's Who in the World }
Who's Who in America }
Who's Who in the East } Current editions
Who's Who in Finance & Industry }
Who's Who in Advertising }

Trademarks

Preparing and Proving Survey Research in Trademark Litigation. The first of a series of Practice Papers, monographs published by the U.S. Trademark Association, September 1990.

"Survey Research Execution in Trademark Litigation: Does Practice Make Perfection?" The Trademark Reporter (New York, July-August, 1983), Vol. 2, No. 4, p.349.

"Research Techniques for Measuring the Impact of Disparaging Use." 1980-81 Trademark Law Handbook (New York, 1980), p.209. The United States Trademark Association and Clark Boardman Company, Ltd.

"The Use of Survey Research in Trademark Law and Unfair Competition." Current Developments in Trademark Law and Unfair Competition (New York, July 12-14, 1978), p.71. Practicing Law Institute.

"Trademarks, Technology, and Social Change: Research Into Trademark Confusion." The Trademark Reporter (New York, January-February, 1972), Vol. 62, No. 1, p.43.

Communications/Marketing Research in Litigation

"Jury Selection and the Behavioral Sciences." Litigation (Winter 1976) Vol. 2, No. 2, p.30. Published by the Litigation Section of the American Bar Association.

Ph.D. Dissertation: Public Sentiment and Personal Prejudice in Criminal Jury Trials, University of Chicago, 1954.

"The Admissibility and Use of Opinion Research Evidence" (with Theodore C. Sorensen). New York University Law Review, Vol. 28, No. 7, November 1953, p.1213.

"Responding to Objections Against the Use of Opinion Survey Findings in the Courts" (with Theodore C. Sorensen). The Journal of Marketing, October, 1955, p.133.

"Re-Examining the Traditional Legal Test of Literary Similarity: A Proposal for Content Analysis" (with Theodore C. Sorensen). Cornell Law Quarterly, Vol. 37, No. 4, Summer 1952, p. 638.

"The Effectiveness of the Oath to Obtain a Witness' True Personal Opinion." Journal of Criminal Law, Criminology and Police Science. September-October, 1956.

"United States v. Hiss: Its Significance for Criminology." Journal of Criminal Law, Criminology and Police Science, September-October, 1952, p. 299

Books

Free Will and Determinism (Editor with Viggo Mortensen). Includes own "Foreword" and paper - "Abundance and the Illusion of Free Choice." Aarhus (Denmark): University of Aarhus Press, 1987.

Adolescent Sexuality in Contemporary America.
New York: World Publishing Company, 1972.

Marketing and Economic Research

"Marketing for Product Use: Its Potential Role in Reducing Product Liability Problems"
Proceedings: Academy of Marketing Science - Developments in Marketing Science,
May 1989.

"The Economics of Information," Challenge, April 1960.

"Marketing Information and the Determination of Value."
Handbook of Mergers, Acquisitions and Buyouts. Steven James Lee and Robert Douglas Coleman, Editors. Prentice Hall, 1981.

Army Procurement and Payment of South Korean Labor. A declassified Monograph.
Washington, D.C.: Operations Research Office, The Johns Hopkins University, 1954.

"The Role of Attrition in Non-Profit Subscriber Service Organizations" (with M.A. Walsh)
Proceedings: International Conference on Services Marketing, October 1988.

"Corporate Marketing."
Applied Sociology. Howard E. Freeman, Russell R. Dynes, Peter H. Rossi and William Foote Whyte, Editors. Jossey - Bass, 1983.

"An Analysis of the Social Aspects of Complaint Reporting: A Survey of VCR Owners" (with William M. Strahle)
Journal of Consumer Satisfaction, Dissatisfaction and Complaining Behavior, January 1990.

"A Study of Complaining Behavior: VCR Owners in Puerto Rico" (with William M. Strahle, Sigfredo Hernandez and Hector L. Garcia)
Journal of Consumer Satisfaction, Dissatisfaction and Complaining Behavior, 1991-92.

"A Cross Cultural Study of Consumer Complaining Behavior: VCR Owners in the U.S. and Puerto Rico (with William M. Strahle, Sigfredo Hernandez and Hector L. Garcia)
Journal of Consumer Policy, 1991, Vol. 14, p. 35.

Communications Research

New Indicators of Psychological Operations Effects. A Monograph.
With F. Tims and F. Mushal, Washington: General Research Corporation, 1975.

"The Future of Communications" in Creativity and the Future,
A book published by British Petroleum Corporation, England 1970.

"Adolescent Sexuality: Crucible for Generational Conflict." Journal of Clinical Psychology, Vol.3, No.3, Fall-Winter 1974, p.44.

"Effective Communications and Personal Values."
The University of Missouri: Second International Symposium for Communications Research, 1966.

"New Perspectives in Advertising."
Ethics, Advertising and Responsibility, Francis X. Quinn, S.J., Editor, 1963, p.41, Institute of Social Ethics, Georgetown University.

"Media Research Can Learn From Psychological Warfare." Media/scope, March 1961, p.86.

"Can Advertising Be Both Moral and Legal?"
Advertising, Scripps-Howard Newspapers, 1961, Cincinnati.

"Sociological Aspects of Psychological Warfare."
J.S. Roucek, Editor, Contemporary Sociology. New York, Philosophical Library, 1958.

"Local Uses of Wired Radio in Communist Ruled Poland" (with Leszek L. Meyer).
Journalism Quarterly, Vol. 32, No. 3, Summer 1955, p. 343.

"The Influence of Public Opinion Polls Upon Legislators,"
Sociology and Social Research, 1950.

Education

"Scandinavian Seminar: Forty Years of Cultural Immersion." Scandinavian Review. Vol. 77, No. 2, Summer 1989, p. 65.

Exhibit H

SORENSEN MARKETING/MANAGEMENT CORPORATION
50 EAST 77TH STREET NEW YORK, NY 10021-1836
Tel (212) 879-5821 Fax (212) 879-5823 e-mail mrktgsage@aol.com

CASES IN WHICH ROBERT C. SORENSEN, Ph.D. HAS TESTIFIED: IN COURT AND/OR BY DEPOSITION 1992-1998.

June 1998

1. 1998 - Graham Webb International Limited Partnership v. Helene Curtis, Inc.
2. 1998 - ND Industries, Opposer and Nylock Fastener Corporation, Opposer.
3. 1997 - Mast-Jägermeister Aktiengesellschaft v. Frank-Lin Int'l Products, Ltd., Richard M. Trachtenberg & Joel K. Beth
4. 1997 - Brady v. Bodum/Bodum adv. Brady and Bodum v. Culinary Parts Unlimited, Inc.
5. 1997 - Sara Lee Corporation v. American Leather Products, Inc. and Donald Rappin
6. 1997 - Ringling Bros.-Barnum & Bailey Combined Shows, Inc. v. B.E.Windows Corporation
7. 1997 - Cardservice International, Inc. v. Webster R. McGee and WRM Associates.
8. 1997 - Touch Tel Corporation, v. AirTouch Communications, U.S. Patent and Trademark Office, Trademark Trial and Appeal Board.
9. 1996 - Warren Distribution, Inc., v. Prestone Products Corporation.
10. 1996 - The Black & Decker Corporation et als v. International Sales and Marketing, GSL Engineering Ltd. et als.
11. 1995 - National Presto Industries, Inc. v. Dazey Corporation.
12. 1995 - Crown Moving And Storage Company dba Crown Worldwide Moving & Storage v. Crown World Wide Movers, Inc. and Crown Pacific, Inc.
13. 1995 - Sportschannel Associates v. Commissioner of Patents and Trademarks.
14. 1994 - Church and Dwight Co., Inc. v. S.C. Johnson & Son, Inc.
15. 1994 - Nora Beverages, Inc. v. The Perrier Group of America, Inc.
16. 1994 - Masco Corp. of Indiana v. Globe-Union Industrial Corp.

CASES IN WHICH ROBERT C. SORENSEN, Ph.D. HAS TESTIFIED: IN COURT AND/OR BY DEPOSITION 1992-1998. (Continued)

17. 1993 - Marc Kasky, et al. v. Perrier Group of America, Inc.

18. 1992 - Ristvedt-Johnson, Inc. and Cummins-Allison Corp. v. Brandt, Inc. U.S. District Court, Chicago, Illinois. Civil Action 88C-3834.

19. 1992 - Zotos International, Inc. v. Conair Corporation. State District Court, Stamford, Connecticut.

20. 1992 - Outboard Marine Corporation, Opposor v. Brunswick Corporation, Applicant. U.S. Patent and Trademark Office, Washington, D.C.

21. 1992 - Hard Rock Cafe: Eastern District v. Western District. Arbitration proceedings in Los Angeles, California.

Exhibit I

TABLES OF INFORMATION

Tables 1A through 7A

Tables 1B through 7B

"Marginals"

SORENSEN MARKETING/
MANAGEMENT CORPORATION
BOAT SURVEY

Q2b. What causes you to say that?

	Total Resp.	Q2a. Do you believe the same keel cooler shown in these three pictures is manufactured by one or by more than one company?		
		One Company	More Than One Company	Don't Know/ Not Sure
TOTAL RESPONDENTS	150 100.0% 100.0%	86 100.0% 57.3%	48 100.0% 32.0%	16 100.0% 10.7%
General appearance	1 0.7% 0.7%	1 1.2% 0.7%	-	-
Shape/design	5 3.3% 3.3%	4 4.7% 2.7%	1 2.1% 0.7%	-
Shape/design is unique	4 2.7% 2.7%	4 4.7% 2.7%	-	-
Materials from which cooler is fabricated	1 0.7% 0.7%	1 1.2% 0.7%	-	-
Standard keel cooler design	1 0.7% 0.7%	-	1 2.1% 0.7%	-
Knowledge of field/ experience	24 16.0% 16.0%	18 20.9% 12.0%	6 12.5% 4.0%	-
Rectangular/square 'tubes'	6 4.0% 4.0%	6 7.0% 4.0%	-	-
Only one company has rectangular 'grid' design/ other brands are different	2 1.3% 1.3%	2 2.3% 1.3%	-	-

TABLE 1A

SORENSEN MARKETING/
MANAGEMENT CORPORATION
BOAT SURVEY

Q2b. What causes you to say that?

	Total Resp.	Q2a. Do you believe the same keel cooler shown in these three pictures is manufactured by one or by more than one company?		
		One Company	More Than One Company	Don't Know/ Not Sure
TOTAL RESPONDENTS	150 100.0% 100.0%	86 100.0% 57.3%	48 100.0% 32.0%	16 100.0% 10.7%
Typical Fernstrum design	1 0.7% 0.7%	1 1.2% 0.7%	-	-
Aware that this design is copies	3 2.0% 2.0%	-	3 6.3% 2.0%	-
Only know one company/ the only company I know	32 21.3% 21.3%	31 36.0% 20.7%	1 2.1% 0.7%	-
Use this type/brand of cooler/ only type/brand used	10 6.7% 6.7%	9 10.5% 6.0%	1 2.1% 0.7%	-
Most commonly used cooler	2 1.3% 1.3%	1 1.2% 0.7%	1 2.1% 0.7%	-
Have seen magazine advertisements, catalogs, etc.	6 4.0% 4.0%	-	6 12.5% 4.0%	-
Other coolers/makers have similar designs	1 0.7% 0.7%	-	1 2.1% 0.7%	-
Have more than one supplier/ know of more than one manufacturer	18 12.0% 12.0%	-	18 37.5% 12.0%	-

CONTINUATION OF TABLE 1A

SORENSEN MARKETING/
MANAGEMENT CORPORATION
BOAT SURVEY

Q2b. What causes you to say that?

	Total Resp.	Q2a. Do you believe the same keel cooler shown in these three pictures is manufactured by one or by more than one company?		
		One Company	More Than One Company	Don't Know/ Not Sure
TOTAL RESPONDENTS	150 100.0% 100.0%	86 100.0% 57.3%	48 100.0% 32.0%	16 100.0% 10.7%
Photographs provide insufficient information for identification	5 3.3% 3.3%	1 1.2% 0.7%	-	4 25.0% 2.7%
Other brands use round/ cylindrical 'tubes'	1 0.7% 0.7%	1 1.2% 0.7%	-	-
Photographs appear to show same cooler	3 2.0% 2.0%	3 3.5% 2.0%	-	-
Other	18 12.0% 12.0%	8 9.3% 5.3%	6 12.5% 4.0%	4 25.0% 2.7%
Miscellaneous	6 4.0% 4.0%	1 1.2% 0.7%	3 6.3% 2.0%	2 12.5% 1.3%
Don't know/not sure	2 1.3% 1.3%	-	-	2 12.5% 1.3%

CONTINUATION OF TABLE 1A

SORENSEN MARKETING/
MANAGEMENT CORPORATION
BOAT SURVEY

Q3a. What do you believe is the name of the company/companies that manufactures the keel cooler shown in the pictures?

	Total Resp.	Q2a. Do you believe the same keel cooler shown in these three pictures is manufactured by one or by more than one company?		
		One Company	More Than One Company	Don't Know/ Not Sure
TOTAL RESPONDENTS	150 100.0% 100.0%	86 100.0% 57.3%	48 100.0% 32.0%	16 100.0% 10.7%
Donovan Marine	2 1.3% 1.3%	-	2 4.2% 1.3%	-
Duramax/Duramax Marine	4 2.7% 2.7%	-	4 8.3% 2.7%	-
East Park Radiator/ East Park	5 3.3% 3.3%	-	5 10.4% 3.3%	-
Fernstrum/R.W. Fernstrum	118 78.7% 78.7%	81 94.2% 54.0%	32 66.7% 21.3%	5 31.3% 3.3%
Fernstrum Gridcooler	4 2.7% 2.7%	1 1.2% 0.7%	3 6.3% 2.0%	-
Gridcooler	2 1.3% 1.3%	-	2 4.2% 1.3%	-
Johnson/Johnson Marine	11 7.3% 7.3%	-	11 22.9% 7.3%	-
Johnson Rubber	-	-	-	-

TABLE 2A

SORENSEN MARKETING/
MANAGEMENT CORPORATION
BOAT SURVEY

Q3a. What do you believe is the name of the company/companies that manufactures the keel cooler shown in the pictures?

	Total Resp.	Q2a. Do you believe the same keel cooler shown in these three pictures is manufactured by one or by more than one company?		
		One Company	More Than One Company	Don't Know/ Not Sure
TOTAL RESPONDENTS	150 100.0% 100.0%	86 100.0% 57.3%	48 100.0% 32.0%	16 100.0% 10.7%
Walter/Walter Machine	-	-	-	-
Photographs provide insufficient I.D. information	5 3.3% 3.3%	1 1.2% 0.7%	4 8.3% 2.7%	-
Other	7 4.7% 4.7%	-	7 14.6% 4.7%	-
Miscellaneous	2 1.3% 1.3%	-	2 4.2% 1.3%	-
Don't know/not sure	-	-	-	-

CONTINUATION OF TABLE 2A

SORENSEN MARKETING/
MANAGEMENT CORPORATION
BOAT SURVEY

Q3b/c. What causes you to say that?

	Total Resp.	Q2a. Do you believe the same keel cooler shown in these three pictures is manufactured by one or by more than one company?		
		One Company	More Than One Company	Don't Know/ Not Sure
TOTAL RESPONDENTS	150 100.0% 100.0%	86 100.0% 57.3%	48 100.0% 32.0%	16 100.0% 10.7%
Shape/design	41 27.3% 27.3%	29 33.7% 19.3%	9 18.8% 6.0%	3 18.8% 2.0%
Materials from which cooler is fabricated	4 2.7% 2.7%	3 3.5% 2.0%	-	1 6.3% 0.7%
Color	3 2.0% 2.0%	2 2.3% 1.3%	1 2.1% 0.7%	-
Rectangular 'grid' form	25 16.7% 16.7%	17 19.8% 11.3%	7 14.6% 4.7%	1 6.3% 0.7%
Rectangular copper/brass/ alloy design	11 7.3% 7.3%	10 11.6% 6.7%	1 2.1% 0.7%	-
Rectangular/square 'tubes'/ shape of 'tubes'	72 48.0% 48.0%	47 54.7% 31.3%	25 52.1% 16.7%	-
Other brands use round/ cylindrical tubes	12 8.0% 8.0%	6 7.0% 4.0%	5 10.4% 3.3%	1 6.3% 0.7%
Photographs appear to show same cooler	1 0.7% 0.7%	-	1 2.1% 0.7%	-

TABLE 3A

SORENSEN MARKETING/
MANAGEMENT CORPORATION
BOAT SURVEY

Q3b/c. What causes you to say that?

	Total Resp.	Q2a. Do you believe the same keel cooler shown in these three pictures is manufactured by one or by more than one company?		
		One Company	More Than One Company	Don't Know/ Not Sure
TOTAL RESPONDENTS	150 100.0% 100.0%	86 100.0% 57.3%	48 100.0% 32.0%	16 100.0% 10.7%
Most commonly used cooler	2 1.3% 1.3%	2 2.3% 1.3%	-	-
Have seen magazine advertisements	1 0.7% 0.7%	-	1 2.1% 0.7%	-
Minimal/non involvement in brand purchase/specifications	5 3.3% 3.3%	1 1.2% 0.7%	1 2.1% 0.7%	3 18.8% 2.0%
Fernstrum is principal manufacturer/Fernstrum is standard	1 0.7% 0.7%	-	1 2.1% 0.7%	-
Use Fernstrum all the time	2 1.3% 1.3%	1 1.2% 0.7%		1 6.3% 0.7%
Aware of Fernstrum 'knock-offs'	2 1.3% 1.3%	1 1.2% 0.7%	1 2.1% 0.7%	-
Looks like Fernstrum design	6 4.0% 4.0%	1 1.2% 0.7%	3 6.3% 2.0%	2 12.5% 1.3%
Have installed many of these	-	-	-	-

CONTINUATION OF TABLE 3A

SORENSEN MARKETING/
MANAGEMENT CORPORATION
BOAT SURVEY

Q3b/c. What causes you to say that?

	Total Resp.	Q2a. Do you believe the same keel cooler shown in these three pictures is manufactured by one or by more than one company?		
		One Company	More Than One Company	Don't Know/ Not Sure
TOTAL RESPONDENTS	150 100.0% 100.0%	86 100.0% 57.3%	48 100.0% 32.0%	16 100.0% 10.7%
Looks like the coolers we use	5 3.3% 3.3%	3 3.5% 2.0%	2 4.2% 1.3%	-
Mainly use inboard coolers	1 0.7% 0.7%	-	1 2.1% 0.7%	-
Photographs provide insufficient I.D.	7 4.7% 4.7%	1 1.2% 0.7%	4 8.3% 2.7%	2 12.5% 1.3%
It is a Gridcooler	2 1.3% 1.3%	2 2.3% 1.3%	-	-
Only Fernstrum has this design	3 2.0% 2.0%	1 1.2% 0.7%	2 4.2% 1.3%	-
Install brand supplied with engine	3 2.0% 2.0%	-	3 6.3% 2.0%	-
Other	11 7.3% 7.3%	4 4.7% 2.7%	4 8.3% 2.7%	3 18.8% 2.0%
Miscellaneous	26 17.3% 17.3%	11 12.8% 7.3%	14 29.2% 9.3%	1 6.3% 0.7%

CONTINUATION OF TABLE 3A

SORENSEN MARKETING/
MANAGEMENT CORPORATION
BOAT SURVEY

Q3b/c. What causes you to say that?

	Total Resp.	Q2a. Do you believe the same keel cooler shown in these three pictures is manufactured by one or by more than one company?		
		One Company	More Than One Company	Don't Know/ Not Sure
TOTAL RESPONDENTS	150 100.0% 100.0%	86 100.0% 57.3%	48 100.0% 32.0%	16 100.0% 10.7%
Don't know/not sure	1 0.7% 0.7%	-	1 2.1% 0.7%	-

SORENSEN MARKETING/
MANAGEMENT CORPORATION
BOAT SURVEY

Q4a. Respondent's Sex
Q4b. Respondent's Age

	Total Resp.	Q2a. Do you believe the same keel cooler shown in these three pictures is manufactured by one or by more than one company?		
		One Company	More Than One Company	Don't Know/ Not Sure
TOTAL RESPONDENTS	150 100.0% 100.0%	86 100.0% 57.3%	48 100.0% 32.0%	16 100.0% 10.7%
SEX				
Male	144 96.0% 96.0%	84 97.7% 56.0%	45 93.8% 30.0%	15 93.8% 10.0%
Female	6 4.0% 4.0%	2 2.3% 1.3%	3 6.3% 2.0%	1 6.3% 0.7%
AGE				
21 to 34	19 12.7% 12.7%	8 9.3% 5.3%	6 12.5% 4.0%	5 31.3% 3.3%
35 to 49	70 46.7% 46.7%	36 41.9% 24.0%	30 62.5% 20.0%	4 25.0% 2.7%
50 and over	61 40.7% 40.7%	42 48.8% 28.0%	12 25.0% 8.0%	7 43.8% 4.7%
Refused all ages	-	-	-	-

TABLE 4A

SORENSEN MARKETING/
MANAGEMENT CORPORATION
BOAT SURVEY

Q5a. How many years have you been involved in specifying, recommending, buying, or installing keel coolers?

		Total Resp.	Q2a. Do you believe the same keel cooler shown in these three pictures is manufactured by one or by more than one company? One Company	More Than One Company	Don't Know/ Not Sure
TOTAL RESPONDENTS		150 100.0% 100.0%	86 100.0% 57.3%	48 100.0% 32.0%	16 100.0% 10.7%
Less than 1 year	= .5	1 0.7% 0.7%	-	-	1 6.3% 0.7%
1 to 3 years	= 2	3 2.0% 2.0%	2 2.3% 1.3%	1 2.1% 0.7%	-
4 to 6 years	= 5	7 4.7% 4.7%	3 3.5% 2.0%	1 2.1% 0.7%	3 18.8% 2.0%
7 to 9 years	= 8	4 2.7% 2.7%	2 2.3% 1.3%	1 2.1% 0.7%	1 6.3% 0.7%
10 to 12 years	= 11	8 5.3% 5.3%	5 5.8% 3.3%	3 6.3% 2.0%	-
13 to 15 years	= 14	8 5.3% 5.3%	3 3.5% 2.0%	4 8.3% 2.7%	1 6.3% 0.7%
16 to 18 years	= 17	7 4.7% 4.7%	1 1.2% 0.7%	5 10.4% 3.3%	1 6.3% 0.7%
19 to 21 years	= 20	26 17.3% 17.3%	13 15.1% 8.7%	8 16.7% 5.3%	5 31.3% 3.3%

TABLE 5A

SORENSEN MARKETING/
MANAGEMENT CORPORATION
BOAT SURVEY

Q5a. How many years have you been involved in specifying, recommending, buying, or installing keel coolers?

		Total Resp.	Q2a. Do you believe the same keel cooler shown in these three pictures is manufactured by one or by more than one company?		
			One Company	More Than One Company	Don't Know/ Not Sure
TOTAL RESPONDENTS		150 100.0% 100.0%	86 100.0% 57.3%	48 100.0% 32.0%	16 100.0% 10.7%
22 to 24 years	= 23	13 8.7% 8.7%	8 9.3% 5.3%	5 10.4% 3.3%	-
25 to 27 years	= 26	21 14.0% 14.0%	12 14.0% 8.0%	9 18.8% 6.0%	-
28 to 30 years	= 29	16 10.7% 10.7%	13 15.1% 8.7%	3 6.3% 2.0%	-
31 to 33 years	= 32	4 2.7% 2.7%	2 2.3% 1.3%	2 4.2% 1.3%	-
34 to 36 years	= 35	15 10.0% 10.0%	11 12.8% 7.3%	3 6.3% 2.0%	1 6.3% 0.7%
37 to 39 years	= 38	1 0.7% 0.7%	-	-	1 6.3% 0.7%
40-42 years	= 41	9 6.0% 6.0%	5 5.8% 3.3%	2 4.2% 1.3%	2 12.5% 1.3%
43 to 45 years	= 44	1 0.7% 0.7%	1 1.2% 0.7%	-	-

CONTINUATION OF TABLE 5A

SORENSEN MARKETING/
MANAGEMENT CORPORATION
BOAT SURVEY

Q5a. How many years have you been involved in specifying, recommending, buying, or installing keel coolers?

			Q2a. Do you believe the same keel cooler shown in these three pictures is manufactured by one or by more than one company?		
		Total Resp.	One Company	More Than One Company	Don't Know/ Not Sure
TOTAL RESPONDENTS		150 100.0% 100.0%	86 100.0% 57.3%	48 100.0% 32.0%	16 100.0% 10.7%
46 to 48 years	= 47	1 0.7% 0.7%	1 1.2% 0.7%	-	-
Other		3 2.0% 2.0%	2 2.3% 1.3%	1 2.1% 0.7%	-
Miscellaneous		-	-	-	-
Don't know/not sure		-	-	-	-
MEDIAN MEAN		22.0 23.3	24.1 24.7	20.4 22.0	17.7 19.3

SORENSEN MARKETING/
MANAGEMENT CORPORATION
BOAT SURVEY

Q6. What is your position with the company?

	Total Resp.	Q2a. Do you believe the same keel cooler shown in these three pictures is manufactured by one or by more than one company?		
		One Company	More Than One Company	Don't Know/ Not Sure
TOTAL RESPONDENTS	150 100.0% 100.0%	86 100.0% 57.3%	48 100.0% 32.0%	16 100.0% 10.7%
Owner	11 7.3% 7.3%	9 10.5% 6.0%	1 2.1% 0.7%	1 6.3% 0.7%
President	11 7.3% 7.3%	10 11.6% 6.7%	-	1 6.3% 0.7%
Vice-President	5 3.3% 3.3%	3 3.5% 2.0%	1 2.1% 0.7%	1 6.3% 0.7%
Managing Director	1 0.7% 0.7%	-	-	1 6.3% 0.7%
General Manager	11 7.3% 7.3%	9 10.5% 6.0%	2 4.2% 1.3%	-
Program Manager	4 2.7% 2.7%	3 3.5% 2.0%	1 2.1% 0.7%	-
Project Manager	6 4.0% 4.0%	3 3.5% 2.0%	3 6.3% 2.0%	-
Engineering Manager	4 2.7% 2.7%	4 4.7% 2.7%	-	-

TABLE 6A

SORENSEN MARKETING/
MANAGEMENT CORPORATION
BOAT SURVEY

Q6. What is your position with the company?

		Q2a. Do you believe the same keel cooler shown in these three pictures is manufactured by one or by more than one company?		
	Total Resp.	One Company	More Than One Company	Don't Know/ Not Sure
TOTAL RESPONDENTS	150 100.0% 100.0%	86 100.0% 57.3%	48 100.0% 32.0%	16 100.0% 10.7%
Operations Manager	8 5.3% 5.3%	4 4.7% 2.7%	4 8.3% 2.7%	-
Technical Manager	2 1.3% 1.3%	1 1.2% 0.7%	1 2.1% 0.7%	-
Supervisor	8 5.3% 5.3%	3 3.5% 2.0%	3 6.3% 2.0%	2 12.5% 1.3%
Buyer/Purchaser/Estimator	27 18.0% 18.0%	11 12.8% 7.3%	12 25.0% 8.0%	4 25.0% 2.7%
Foreman	3 2.0% 2.0%	2 2.3% 1.3%	-	1 6.3% 0.7%
Superintendent	11 7.3% 7.3%	4 4.7% 2.7%	6 12.5% 4.0%	1 6.3% 0.7%
Engineer	19 12.7% 12.7%	11 12.8% 7.3%	8 16.7% 5.3%	-
Sales	3 2.0% 2.0%	1 1.2% 0.7%	1 2.1% 0.7%	1 6.3% 0.7%

CONTINUATION OF TABLE 6A

SORENSEN MARKETING/
MANAGEMENT CORPORATION
BOAT SURVEY

Q6. What is your position with the company?

	Total Resp.	Q2a. Do you believe the same keel cooler shown in these three pictures is manufactured by one or by more than one company?		
		One Company	More Than One Company	Don't Know/ Not Sure
TOTAL RESPONDENTS	150 100.0% 100.0%	86 100.0% 57.3%	48 100.0% 32.0%	16 100.0% 10.7%
Naval Architect	3 2.0% 2.0%	2 2.3% 1.3%	1 2.1% 0.7%	-
Other	14 9.3% 9.3%	7 8.1% 4.7%	4 8.3% 2.7%	3 18.8% 2.0%
Miscellaneous	1 0.7% 0.7%	1 1.2% 0.7%	-	-
Don't know/not sure	1 0.7% 0.7%	1 1.2% 0.7%	-	-

SORENSEN MARKETING/
MANAGEMENT CORPORATION
BOAT SURVEY

Interview Location

	Total Resp.	Q2a. Do you believe the same keel cooler shown in these three pictures is manufactured by one or by more than one company?		
		One Company	More Than One Company	Don't Know/ Not Sure
TOTAL RESPONDENTS	150	86	48	16
	100.0%	100.0%	100.0%	100.0%
	100.0%	57.3%	32.0%	10.7%
Alabama	31	15	11	5
	20.7%	17.4%	22.9%	31.3%
	20.7%	10.0%	7.3%	3.3%
Florida	11	7	3	1
	7.3%	8.1%	6.3%	6.3%
	7.3%	4.7%	2.0%	0.7%
Louisiana	71	34	29	8
	47.3%	39.5%	60.4%	50.0%
	47.3%	22.7%	19.3%	5.3%
Mississippi	11	7	4	-
	7.3%	8.1%	8.3%	
	7.3%	4.7%	2.7%	
Texas	26	23	1	2
	17.3%	26.7%	2.1%	12.5%
	17.3%	15.3%	0.7%	1.3%

ENSEN MARKETING/
AGEMENT CORPORATION
SURVEY

What causes you to say that?

Q3a. What do you believe is the name of the company/companies that manufactures the keel cooler shown in the pictures?

	Total Resp.	Donavan Marine	Duramax/ Duramax Marine	East Park Radiator/ East Park	Fernstrum /R.W. Fernstrum	Fernstrum Grid-cooler	Grid-cooler	Johnson/ Johnson Marine	Johnson Rubber	Walter/ Walter Machine	Photos Provide Insuff. ID Info	Other	Misc.	DK/NS
L	150	2	4	5	118	4	2	11	-	-	5	7	2	8
DENTS	100.0%	100.0%	100.0%	100.0%	100.0%	100.0%	100.0%	100.0%			100.0%	100.0%	100.0%	100.0%
	100.0%	1.3%	2.7%	3.3%	78.7%	2.7%	1.3%	7.3%			3.3%	4.7%	1.3%	5.3%
l appearance	1	-	-	-	1	-	-	-	-	-	-	-	-	-
	0.7%				0.8%									
	0.7%				0.7%									
'design	5	-	-	-	4	1	1	-	-	-	-	-	-	-
	3.3%				3.4%	25.0%	50.0%							
	3.3%				2.7%	0.7%	0.7%							
/design is unique	4	-	-	-	3	-	-	-	-	-	-	-	-	-
	2.7%				2.5%									
	2.7%				2.0%									
als from which cooler	1	-	-	-	1	-	-	-	-	-	-	-	-	-
ricated	0.7%				0.8%									
	0.7%				0.7%									
rd keel cooler design	1	-	-	-	-	-	-	-	-	-	-	-	-	1
	0.7%													12.5%
	0.7%													0.7%
dge of field/	24	-	1	2	23	1	-	3	-	-	-	1	-	-
ence	16.0%		25.0%	40.0%	19.5%	25.0%		27.3%				14.3%		
	16.0%		0.7%	1.3%	15.3%	0.7%		2.0%				0.7%		
ngular/square 'tubes'	6	-	-	-	6	-	-	-	-	-	-	-	-	-
	4.0%				5.1%									
	4.0%				4.0%									
one company has	2	-	-	-	2	-	-	-	-	-	-	-	-	-
ngular 'grid' design/	1.3%				1.7%									
brands are different	1.3%				1.3%									

. What causes you to say that?

Q3a. What do you believe is the name of the company/companies that manufactures the keel cooler shown in the pictures?

	Total Resp.	Donavan Marine	Duramax/ Duramax Marine	East Park Radiator/ East Park	Fernstrum /R.W. Fernstrum	Fernstrum Grid-cooler	Grid-cooler	Johnson/ Johnson Marine	Johnson Rubber	Walter/ Walter Machine	Photos Provide Insuff. ID Info	Other	Misc.	DK/NS
AL NDENTS	150 100.0% 100.0%	2 100.0% 1.3%	4 100.0% 2.7%	5 100.0% 3.3%	118 100.0% 78.7%	4 100.0% 2.7%	2 100.0% 1.3%	11 100.0% 7.3%	-	-	5 100.0% 3.3%	7 100.0% 4.7%	2 100.0% 1.3%	8 100.0% 5.3%
al Fernstrum design	1 0.7% 0.7%	-	-	-	1 0.8% 0.7%	-	-	-	-	-	-	-	-	-
that this design pies	3 2.0% 2.0%	-	-	-	3 2.5% 2.0%	-	-	-	-	-	-	1 14.3% 0.7%	-	-
know one company/ nly company I know	32 21.3% 21.3%	-	-	-	32 27.1% 21.3%	-	-	-	-	-	-	-	-	-
his type/brand of cooler/ type/brand used	10 6.7% 6.7%	-	-	-	10 8.5% 6.7%	-	-	1 9.1% 0.7%	-	-	-	-	-	-
commonly used cooler	2 1.3% 1.3%	-	-	-	2 1.7% 1.3%	-	-	-	-	-	-	1 14.3% 0.7%	-	-
seen magazine tisements, catalogs, etc.	6 4.0% 4.0%	-	-	1 20.0% 0.7%	4 3.4% 2.7%	1 25.0% 0.7%	-	1 9.1% 0.7%	-	-	1 20.0% 0.7%	2 28.6% 1.3%	-	-
coolers/makers have ar designs	1 0.7% 0.7%	-	-	-	-	-	-	-	-	-	-	-	-	-
more than one supplier/ of more than one facturer	18 12.0% 12.0%	1 50.0% 0.7%	3 75.0% 2.0%	3 60.0% 2.0%	11 9.3% 7.3%	1 25.0% 0.7%	-	6 54.5% 4.0%	-	-	2 40.0% 1.3%	2 28.6% 1.3%	1 50.0% 0.7%	1 12.5% 0.7%

NSEN MARKETING/
GEMENT CORPORATION
SURVEY

What causes you to say that?

Q3a. What do you believe is the name of the company/companies that manufactures the keel cooler shown in the pictures?

	Total Resp.	Donavan Marine	Duramax/ Duramax Marine	East Park Radiator/ East Park	Fernstrum /R.W. Fernstrum	Fernstrum Grid-cooler	Grid-cooler	Johnson/ Johnson Marine	Johnson Rubber	Walter/ Walter Machine	Photos Provide Insuff. ID Info	Other	Misc.	DK/NS
L DENTS	150 100.0% 100.0%	2 100.0% 1.3%	4 100.0% 2.7%	5 100.0% 3.3%	118 100.0% 78.7%	4 100.0% 2.7%	2 100.0% 1.3%	11 100.0% 7.3%	-	-	5 100.0% 3.3%	7 100.0% 4.7%	2 100.0% 1.3%	8 100.0% 5.3%
raphs provide icient information entification	5 3.3% 3.3%	-	-	-	2 1.7% 1.3%	-	-	-	-	-	-	-	-	1 12.5% 0.7%
brands use round/ rical 'tubes'	1 0.7% 0.7%	-	-	-	1 0.8% 0.7%	-	-	-	-	-	-	-	-	-
raphs appear to show ooler	3 2.0% 2.0%	-	-	-	2 1.7% 1.3%	-	-	-	-	-	-	-	-	1 12.5% 0.7%
	18 12.0% 12.0%	1 50.0% 0.7%	1 25.0% 0.7%	-	10 8.5% 6.7%	-	-	2 18.2% 1.3%	-	-	2 40.0% 1.3%	-	1 50.0% 0.7%	3 37.5% 2.0%
llaneous	6 4.0% 4.0%	-	-	-	4 3.4% 2.7%	-	1 50.0% 0.7%	-	-	-	-	-	-	1 12.5% 0.7%
know/not sure	2 1.3% 1.3%	-	-	-	1 0.8% 0.7%	-	-	-	-	-	-	-	-	-

NUATION OF TABLE 1B

ENSEN MARKETING/
AGEMENT CORPORATION
T SURVEY

. What do you believe is the name of the company/companies that manufactures the keel cooler shown in the pictures?

Q3a. What do you believe is the name of the company/companies that manufactures the keel cooler shown in the pictures?

	Total Resp.	Donavan Marine	Duramax/ Duramax Marine	East Park Radiator/ East Park	Fernstrum /R.W. Fernstrum	Fernstrum Grid-cooler	Grid-cooler	Johnson/ Johnson Marine	Johnson Rubber	Walter/ Walter Machine	Photos Provide Insuff. ID Info	Other	Misc.	DK/NS
AL	150	2	4	5	118	4	2	11	-	-	5	7	2	8
NDENTS	100.0%	100.0%	100.0%	100.0%	100.0%	100.0%	100.0%	100.0%			100.0%	100.0%	100.0%	100.0%
	100.0%	1.3%	2.7%	3.3%	78.7%	2.7%	1.3%	7.3%			3.3%	4.7%	1.3%	5.3%
an Marine	2	2	-	-	1	-	-	-	-	-	-	-	1	-
	1.3%	100.0%			0.8%								50.0%	
	1.3%	1.3%			0.7%								0.7%	
ax/Duramax Marine	4	-	4	-	4	-	-	3	-	-	-	-	-	-
	2.7%		100.0%		3.4%			27.3%						
	2.7%		2.7%		2.7%			2.0%						
Park Radiator/	5	-	-	5	4	-	-	4	-	-	-	-	-	-
Park	3.3%			100.0%	3.4%			36.4%						
	3.3%			3.3%	2.7%			2.7%						
trum/R.W. Fernstrum	118	1	4	4	118	-	1	10	-	-	-	5	-	-
	78.7%	50.0%	100.0%	80.0%	100.0%		50.0%	90.9%				71.4%		
	78.7%	0.7%	2.7%	2.7%	78.7%		0.7%	6.7%				3.3%		
trum Gridcooler	4	-	-	-	-	4	1	-	-	-	-	1	-	-
	2.7%					100.0%	50.0%					14.3%		
	2.7%					2.7%	0.7%					0.7%		
ooler	2	-	-	-	1	1	2	-	-	-	-	-	-	-
	1.3%				0.8%	25.0%	100.0%							
	1.3%				0.7%	0.7%	1.3%							
on/Johnson Marine	11	-	3	4	10	-	-	11	-	-	-	-	-	-
	7.3%		75.0%	80.0%	8.5%			100.0%						
	7.3%		2.0%	2.7%	6.7%			7.3%						
on Rubber	-	-	-	-	-	-	-	-	-	-	-	-	-	-

ENSEN MARKETING/
AGEMENT CORPORATION
T SURVEY

. What do you believe is the name of the company/companies that manufactures the keel cooler shown in the pictures?

Q3a. What do you believe is the name of the company/companies that manufactures the keel cooler shown in the pictures?

	Total Resp.	Donavan Marine	Duramax/ Duramax Marine	East Park Radiator/ East Park	Fernstrum /R.W. Fernstrum	Fernstrum Grid-cooler	Grid-cooler	Johnson/ Johnson Marine	Johnson Rubber	Walter/ Walter Machine	Photos Provide Insuff. ID Info	Other	Misc.	DK/NS
AL NDENTS	150 100.0% 100.0%	2 100.0% 1.3%	4 100.0% 2.7%	5 100.0% 3.3%	118 100.0% 78.7%	4 100.0% 2.7%	2 100.0% 1.3%	11 100.0% 7.3%	-	-	5 100.0% 3.3%	7 100.0% 4.7%	2 100.0% 1.3%	8 100.0% 5.3%
r/Walter Machine	-	-	-	-	-	-	-	-	-	-	-	-	-	-
graphs provide ficient I.D. mation	5 3.3% 3.3%	-	-	-	-	-	-	-	-	-	5 100.0% 3.3%	-	-	-
	7 4.7% 4.7%	-	-	-	5 4.2% 3.3%	1 25.0% 0.7%	-	-	-	-	-	7 100.0% 4.7%	-	-
llaneous	2 1.3% 1.3%	1 50.0% 0.7%	-	-	-	-	-	-	-	-	-	-	2 100.0% 1.3%	-
know/not sure	-	-	-	-	-	-	-	-	-	-	-	-	-	-

NUATION OF TABLE 2B

ENSEN MARKETING/
AGEMENT CORPORATION
T SURVEY

/c. What causes you to say that?

Q3a. What do you believe is the name of the company/companies that manufactures the keel cooler shown in the pictures?

	Total Resp.	Donavan Marine	Duramax/ Duramax Marine	East Park Radiator/ East Park	Fernstrum /R.W. Fernstrum	Fernstrum Grid-cooler	Grid-cooler	Johnson/ Johnson Marine	Johnson Rubber	Walter/ Walter Machine	Photos Provide Insuff. ID Info	Other	Misc.	DK/NS
AL	150	2	4	5	118	4	2	11	-	-	5	7	2	8
NDENTS	100.0%	100.0%	100.0%	100.0%	100.0%	100.0%	100.0%	100.0%			100.0%	100.0%	100.0%	100.0%
	100.0%	1.3%	2.7%	3.3%	78.7%	2.7%	1.3%	7.3%			3.3%	4.7%	1.3%	5.3%
/design	41	1	-	1	36	2	1	2	-	-	-	2	1	1
	27.3%	50.0%		20.0%	30.5%	50.0%	50.0%	18.2%				28.6%	50.0%	12.5%
	27.3%	0.7%		0.7%	24.0%	1.3%	0.7%	1.3%				1.3%	0.7%	0.7%
ials from which	4	-	-	-	4	-	-	-	-	-	-	-	-	-
is fabricated	2.7%				3.4%									
	2.7%				2.7%									
	3	-	-	-	3	-	-	-	-	-	-	1	-	-
	2.0%				2.5%							14.3%		
	2.0%				2.0%							0.7%		
ngular 'grid' form	25	1	-	1	23	1	-	1	-	-	-	3	1	-
	16.7%	50.0%		20.0%	19.5%	25.0%		9.1%				42.9%	50.0%	
	16.7%	0.7%		0.7%	15.3%	0.7%		0.7%				2.0%	0.7%	
ngular copper/brass/	11	-	-	-	11	-	-	1	-	-	-	-	-	-
design	7.3%				9.3%			9.1%						
	7.3%				7.3%			0.7%						
ngular/square 'tubes'/	72	-	4	3	69	1	1	9	-	-	-	4	-	-
of 'tubes'	48.0%		100.0%	60.0%	58.5%	25.0%	50.0%	81.8%				57.1%		
	48.0%		2.7%	2.0%	46.0%	0.7%	0.7%	6.0%				2.7%		
brands use round/	12	-	1	-	11	-	-	2	-	-	-	-	-	-
drical tubes	8.0%		25.0%		9.3%			18.2%						
	8.0%		0.7%		7.3%			1.3%						
graphs appear to show	1	-	-	-	-	1	1	-	-	-	-	-	-	-
cooler	0.7%					25.0%	50.0%							
	0.7%					0.7%	0.7%							

ENSEN MARKETING/
AGEMENT CORPORATION
T SURVEY

/c. What causes you to say that?

Q3a. What do you believe is the name of the company/companies that manufactures the keel cooler shown in the pictures?

	Total Resp.	Donavan Marine	Duramax/ Duramax Marine	East Park Radiator/ East Park	Fernstrum /R.W. Fernstrum	Fernstrum Grid-cooler	Grid-cooler	Johnson/ Johnson Marine	Johnson Rubber	Walter/ Walter Machine	Photos Provide Insuff. ID Info	Other	Misc.	DK/NS
AL NDENTS	150 100.0% 100.0%	2 100.0% 1.3%	4 100.0% 2.7%	5 100.0% 3.3%	118 100.0% 78.7%	4 100.0% 2.7%	2 100.0% 1.3%	11 100.0% 7.3%	-	-	5 100.0% 3.3%	7 100.0% 4.7%	2 100.0% 1.3%	8 100.0% 5.3%
ommonly used cooler	2 1.3% 1.3%	-	-	-	2 1.7% 1.3%	-	-	-	-	-	-	-	-	-
een magazine isements	1 0.7% 0.7%	-	-	-	1 0.8% 0.7%	-	-	-	-	-	-	-	-	-
l/non involvement in purchase/specifications	5 3.3% 3.3%	-	-	-	1 0.8% 0.7%	-	-	-	-	-	1 20.0% 0.7%	-	-	1 12.5% 0.7%
rum is principal cturer/Fernstrum is rd	1 0.7% 0.7%	-	-	-	1 0.8% 0.7%	-	-	-	-	-	-	-	-	-
rnstrum all the time	2 1.3% 1.3%	-	-	-	2 1.7% 1.3%	-	-	-	-	-	-	-	-	-
of Fernstrum -offs'	2 1.3% 1.3%	-	-	-	2 1.7% 1.3%	-	-	-	-	-	-	1 14.3% 0.7%	-	-
like Fernstrum design	6 4.0% 4.0%	1 50.0% 0.7%	-	-	4 3.4% 2.7%	-	-	-	-	-	-	1 14.3% 0.7%	1 50.0% 0.7%	1 12.5% 0.7%
nstalled many e	-	-	-	-	-	-	-	-	-	-	-	-	-	-

VATION OF TABLE 3B

RENSEN MARKETING/
NAGEMENT CORPORATION
AT SURVEY

o/c. What causes you to say that?

Q3a. What do you believe is the name of the company/companies that manufactures the keel cooler shown in the pictures?

	Total Resp.	Donavan Marine	Duramax/ Duramax Marine	East Park Radiator/ East Park	Fernstrum /R.W. Fernstrum	Fernstrum Grid-cooler	Grid-cooler	Johnson/ Johnson Marine	Johnson Rubber	Walter/ Walter Machine	Photos Provide Insuff. ID Info	Other	Misc.	DK/NS
AL NDENTS	150 100.0% 100.0%	2 100.0% 1.3%	4 100.0% 2.7%	5 100.0% 3.3%	118 100.0% 78.7%	4 100.0% 2.7%	2 100.0% 1.3%	11 100.0% 7.3%	-	-	5 100.0% 3.3%	7 100.0% 4.7%	2 100.0% 1.3%	8 100.0% 5.3%
like the coolers we use	5 3.3% 3.3%	-	-	1 20.0% 0.7%	5 4.2% 3.3%	-	-	-	-	-	-	1 14.3% 0.7%	-	-
use inboard coolers	1 0.7% 0.7%	-	-	-	-	-	-	-	-	-	1 20.0% 0.7%	-	-	-
raphs provide icient I.D.	7 4.7% 4.7%	-	-	2 40.0% 1.3%	4 3.4% 2.7%	-	-	2 18.2% 1.3%	-	-	1 20.0% 0.7%	-	-	-
a Gridcooler	2 1.3% 1.3%	-	-	-	2 1.7% 1.3%	-	-	-	-	-	-	-	-	-
ernstrum has this	3 2.0% 2.0%	-	1 25.0% 0.7%	-	3 2.5% 2.0%	-	-	1 9.1% 0.7%	-	-	-	-	-	-
l brand supplied ngine	3 2.0% 2.0%	-	-	-	-	-	-	-	-	-	-	1 14.3% 0.7%	1 50.0% 0.7%	-
	11 7.3% 7.3%	-	-	1 20.0% 0.7%	7 5.9% 4.7%	-	-	-	-	-	-	1 14.3% 0.7%	-	1 12.5% 0.7%
laneous	26 17.3% 17.3%	-	1 25.0% 0.7%	2 40.0% 1.3%	17 14.4% 11.3%	2 50.0% 1.3%	1 50.0% 0.7%	4 36.4% 2.7%	-	-	3 60.0% 2.0%	1 14.3% 0.7%	1 50.0% 0.7%	1 12.5% 0.7%

ATION OF TABLE 3B

RENSEN MARKETING/
NAGEMENT CORPORATION
AT SURVEY

o/c. What causes you to say that?

Q3a. What do you believe is the name of the company/companies that manufactures the keel cooler shown in the pictures?

	Total Resp.	Donavan Marine	Duramax/ Duramax Marine	East Park Radiator/ East Park	Fernstrum /R.W. Fernstrum	Fernstrum Grid- cooler	Grid- cooler	Johnson/ Johnson Marine	Johnson Rubber	Walter/ Walter Machine	Photos Provide Insuff. ID Info	Other	Misc.	DK/NS
AL	150	2	4	5	118	4	2	11	-	-	5	7	2	8
NDENTS	100.0%	100.0%	100.0%	100.0%	100.0%	100.0%	100.0%	100.0%			100.0%	100.0%	100.0%	100.0%
	100.0%	1.3%	2.7%	3.3%	78.7%	2.7%	1.3%	7.3%			3.3%	4.7%	1.3%	5.3%
know/not sure	1	1	-	-	1	-	-	-	-	-	-	-	-	-
	0.7%	50.0%			0.8%									
	0.7%	0.7%			0.7%									

UATION OF TABLE 3B

NSEN MARKETING/
GEMENT CORPORATION
SURVEY

Respondent's Sex
Respondent's Age

Q3a. What do you believe is the name of the company/companies that manufactures the keel cooler shown in the pictures?

	Total Resp.	Donavan Marine	Duramax/ Duramax Marine	East Park Radiator/ East Park	Fernstrum /R.W. Fernstrum	Fernstrum Grid-cooler	Grid-cooler	Johnson/ Johnson Marine	Johnson Rubber	Walter/ Walter Machine	Photos Provide Insuff. ID Info	Other	Misc.	DK/NS
L	150	2	4	5	118	4	2	11	-	-	5	7	2	8
DENTS	100.0%	100.0%	100.0%	100.0%	100.0%	100.0%	100.0%	100.0%			100.0%	100.0%	100.0%	100.0%
	100.0%	1.3%	2.7%	3.3%	78.7%	2.7%	1.3%	7.3%			3.3%	4.7%	1.3%	5.3%
e	144	2	4	5	114	4	2	11	-	-	5	7	2	7
	96.0%	100.0%	100.0%	100.0%	96.6%	100.0%	100.0%	100.0%			100.0%	100.0%	100.0%	87.5%
	96.0%	1.3%	2.7%	3.3%	76.0%	2.7%	1.3%	7.3%			3.3%	4.7%	1.3%	4.7%
ale	6	-	-	-	4	-	-	-	-	-	-	-	-	1
	4.0%				3.4%									12.5%
	4.0%				2.7%									0.7%
to 34	19	-	1	-	10	-	-	1	-	-	1	2	1	2
	12.7%		25.0%		8.5%			9.1%			20.0%	28.6%	50.0%	25.0%
	12.7%		0.7%		6.7%			0.7%			0.7%	1.3%	0.7%	1.3%
to 49	70	-	3	5	54	3	1	7	-	-	3	4	-	5
	46.7%		75.0%	100.0%	45.8%	75.0%	50.0%	63.6%			60.0%	57.1%		62.5%
	46.7%		2.0%	3.3%	36.0%	2.0%	0.7%	4.7%			2.0%	2.7%		3.3%
and over	61	2	-	-	54	1	1	3	-	-	1	1	1	1
	40.7%	100.0%			45.8%	25.0%	50.0%	27.3%			20.0%	14.3%	50.0%	12.5%
	40.7%	1.3%			36.0%	0.7%	0.7%	2.0%			0.7%	0.7%	0.7%	0.7%
fused all ages	-	-	-	-	-	-	-	-	-	-	-	-	-	-

SEN MARKETING/
EMENT CORPORATION
SURVEY

How many years have you been involved in specifying, recommending, buying, or installing keel coolers?

Q3a. What do you believe is the name of the company/companies that manufactures the keel cooler shown in the pictures?

		Total Resp.	Donavan Marine	Duramax/ Duramax Marine	East Park Radiator/ East Park	Fernstrum /R.W. Fernstrum	Fernstrum Grid-cooler	Grid-cooler	Johnson/ Johnson Marine	Johnson Rubber	Walter/ Walter Machine	Photos Provide Insuff. ID Info	Other	Misc.	DK/NS
ENTS		150 100.0% 100.0%	2 100.0% 1.3%	4 100.0% 2.7%	5 100.0% 3.3%	118 100.0% 78.7%	4 100.0% 2.7%	2 100.0% 1.3%	11 100.0% 7.3%	-	-	5 100.0% 3.3%	7 100.0% 4.7%	2 100.0% 1.3%	8 100.0% 5.3%
an 1 year	= .5	1 0.7% 0.7%	-	-	-	-	-	-	-	-	-	-	-	-	1 12.5% 0.7%
years	= 2	3 2.0% 2.0%	-	-	-	2 1.7% 1.3%	-	-	-	-	-	-	1 14.3% 0.7%	-	-
years	= 5	7 4.7% 4.7%	-	-	-	3 2.5% 2.0%	-	-	-	-	-	-	-	-	2 25.0% 1.3%
years	= 8	4 2.7% 2.7%	-	-	-	2 1.7% 1.3%	-	-	-	-	-	1 20.0% 0.7%	-	-	-
12 years	= 11	8 5.3% 5.3%	-	1 25.0% 0.7%	-	6 5.1% 4.0%	-	-	2 18.2% 1.3%	-	-	1 20.0% 0.7%	-	-	1 12.5% 0.7%
15 years	= 14	8 5.3% 5.3%	-	-	-	4 3.4% 2.7%	-	-	-	-	-	1 20.0% 0.7%	-	1 50.0% 0.7%	-
18 years	= 17	7 4.7% 4.7%	-	1 25.0% 0.7%	-	6 5.1% 4.0%	-	-	1 9.1% 0.7%	-	-	-	-	-	-
21 years	= 20	26 17.3% 17.3%	-	1 25.0% 0.7%	1 20.0% 0.7%	18 15.3% 12.0%	2 50.0% 1.3%	-	1 9.1% 0.7%	-	-	-	2 28.6% 1.3%	-	2 25.0% 1.3%

NSEN MARKETING/
GEMENT CORPORATION
SURVEY

How many years have you been involved in specifying, recommending, buying, or installing keel coolers?

Q3a. What do you believe is the name of the company/companies that manufactures the keel cooler shown in the pictures?

		Total Resp.	Donavan Marine	Duramax/ Duramax Marine	East Park Radiator/ East Park	Fernstrum /R.W. Fernstrum	Fernstrum Grid-cooler	Grid-cooler	Johnson/ Johnson Marine	Johnson Rubber	Walter/ Walter Machine	Photos Provide Insuff. ID Info	Other	Misc.	DK/NS
L		150	2	4	5	118	4	2	11	-	-	5	7	2	8
DENTS		100.0%	100.0%	100.0%	100.0%	100.0%	100.0%	100.0%	100.0%			100.0%	100.0%	100.0%	100.0%
		100.0%	1.3%	2.7%	3.3%	78.7%	2.7%	1.3%	7.3%			3.3%	4.7%	1.3%	5.3%
24 years	= 23	13	-	-	1	11	1	1	2	-	-	-	1	-	1
		8.7%			20.0%	9.3%	25.0%	50.0%	18.2%				14.3%		12.5%
		8.7%			0.7%	7.3%	0.7%	0.7%	1.3%				0.7%		0.7%
27 years	= 26	21	-	-	2	20	-	-	2	-	-	1	2	-	-
		14.0%			40.0%	16.9%			18.2%			20.0%	28.6%		
		14.0%			1.3%	13.3%			1.3%			0.7%	1.3%		
30 years	= 29	16	1	-	1	15	-	-	2	-	-	-	-	-	-
		10.7%	50.0%		20.0%	12.7%			18.2%						
		10.7%	0.7%		0.7%	10.0%			1.3%						
33 years	= 32	4	-	1	-	4	-	-	1	-	-	-	-	-	-
		2.7%		25.0%		3.4%			9.1%						
		2.7%		0.7%		2.7%			0.7%						
36 years	= 35	15	1	-	-	13	-	-	-	-	-	-	1	1	-
		10.0%	50.0%			11.0%							14.3%	50.0%	
		10.0%	0.7%			8.7%							0.7%	0.7%	
39 years	= 38	1	-	-	-	1	-	-	-	-	-	-	-	-	-
		0.7%				0.8%									
		0.7%				0.7%									
years	= 41	9	-	-	-	7	1	1	-	-	-	-	-	-	1
		6.0%				5.9%	25.0%	50.0%							12.5%
		6.0%				4.7%	0.7%	0.7%							0.7%
45 years	= 44	1	-	-	-	1	-	-	-	-	-	-	-	-	-
		0.7%				0.8%									
		0.7%				0.7%									

ENSEN MARKETING/
AGEMENT CORPORATION
T SURVEY

. How many years have you been involved in specifying, recommending, buying, or installing keel coolers?

Q3a. What do you believe is the name of the company/companies that manufactures the keel cooler shown in the pictures?

		Total Resp.	Donavan Marine	Duramax/ Duramax Marine	East Park Radiator/ East Park	Fernstrum /R.W. Fernstrum	Fernstrum Grid-cooler	Grid-cooler	Johnson/ Johnson Marine	Johnson Rubber	Walter/ Walter Machine	Photos Provide Insuff. ID Info	Other	Misc.	DK/NS
AL		150	2	4	5	118	4	2	11	-	-	5	7	2	8
NDENTS		100.0%	100.0%	100.0%	100.0%	100.0%	100.0%	100.0%	100.0%			100.0%	100.0%	100.0%	100.0%
		100.0%	1.3%	2.7%	3.3%	78.7%	2.7%	1.3%	7.3%			3.3%	4.7%	1.3%	5.3%
48 years	= 47	1	-	-	-	-	-	-	-	-	-	1	-	-	-
		0.7%										20.0%			
		0.7%										0.7%			
		3	-	-	-	3	-	-	-	-	-	-	-	-	-
		2.0%				2.5%									
		2.0%				2.0%									
llaneous		-	-	-	-	-	-	-	-	-	-	-	-	-	-
know/not sure		-	-	-	-	-	-	-	-	-	-	-	-	-	-
AN		22.0	29.0	17.0	23.8	23.8	20.0	23.0	22.3			12.6	21.5	14.0	11.0
		23.3	32.0	20.0	24.8	24.6	26.0	32.0	22.5			21.2	21.7	24.5	15.7

INUATION OF TABLE 5B

NSEN MARKETING/
GEMENT CORPORATION
SURVEY

What is your position with the company?

Q3a. What do you believe is the name of the company/companies that manufactures the keel cooler shown in the pictures?

	Total Resp.	Donavan Marine	Duramax/ Duramax Marine	East Park Radiator/ East Park	Fernstrum /R.W. Fernstrum	Fernstrum Grid-cooler	Grid-cooler	Johnson/ Johnson Marine	Johnson Rubber	Walter/ Walter Machine	Photos Provide Insuff. ID Info	Other	Misc.	DK/NS
L	150	2	4	5	118	4	2	11	-	-	5	7	2	8
DENTS	100.0%	100.0%	100.0%	100.0%	100.0%	100.0%	100.0%	100.0%			100.0%	100.0%	100.0%	100.0%
	100.0%	1.3%	2.7%	3.3%	78.7%	2.7%	1.3%	7.3%			3.3%	4.7%	1.3%	5.3%
	11	-	-	-	10	-	-	-	-	-	-	1	-	-
	7.3%				8.5%							14.3%		
	7.3%				6.7%							0.7%		
ent	11	-	-	-	11	-	-	-	-	-	-	-	-	-
	7.3%				9.3%									
	7.3%				7.3%									
resident	5	-	-	-	5	-	-	-	-	-	-	-	-	-
	3.3%				4.2%									
	3.3%				3.3%									
ng Director	1	-	-	-	1	-	-	-	-	-	-	-	-	-
	0.7%				0.8%									
	0.7%				0.7%									
l Manager	11	-	-	-	10	-	-	-	-	-	1	-	-	-
	7.3%				8.5%						20.0%			
	7.3%				6.7%						0.7%			
n Manager	4	-	-	-	4	-	-	-	-	-	-	1	-	-
	2.7%				3.4%							14.3%		
	2.7%				2.7%							0.7%		
t Manager	6	1	1	-	6	-	-	1	-	-	-	-	-	-
	4.0%	50.0%	25.0%		5.1%			9.1%						
	4.0%	0.7%	0.7%		4.0%			0.7%						
ering Manager	4	-	-	-	3	-	-	-	-	-	1	-	-	-
	2.7%				2.5%						20.0%			
	2.7%				2.0%						0.7%			

NSEN MARKETING/
GEMENT CORPORATION
SURVEY

What is your position with the company?

Q3a. What do you believe is the name of the company/companies that manufactures the keel cooler shown in the pictures?

	Total Resp.	Donavan Marine	Duramax/ Duramax Marine	East Park Radiator/ East Park	Fernstrum /R.W. Fernstrum	Fernstrum Grid-cooler	Grid-cooler	Johnson/ Johnson Marine	Johnson Rubber	Walter/ Walter Machine	Photos Provide Insuff. ID Info	Other	Misc.	DK/NS
L	150	2	4	5	118	4	2	11	-	-	5	7	2	8
DENTS	100.0%	100.0%	100.0%	100.0%	100.0%	100.0%	100.0%	100.0%			100.0%	100.0%	100.0%	100.0%
	100.0%	1.3%	2.7%	3.3%	78.7%	2.7%	1.3%	7.3%			3.3%	4.7%	1.3%	5.3%
ions Manager	8	-	-	-	6	-	-	-	-	-	-	1	1	-
	5.3%				5.1%							14.3%	50.0%	
	5.3%				4.0%							0.7%	0.7%	
cal Manager	2	-	-	1	2	-	-	1	-	-	-	-	-	-
	1.3%			20.0%	1.7%			9.1%						
	1.3%			0.7%	1.3%			0.7%						
isor	8	-	-	2	5	-	-	2	-	-	-	-	-	2
	5.3%			40.0%	4.2%			18.2%						25.0%
	5.3%			1.3%	3.3%			1.3%						1.3%
Purchaser/Estimator	27	-	2	1	20	1	-	4	-	-	2	2	-	1
	18.0%		50.0%	20.0%	16.9%	25.0%		36.4%			40.0%	28.6%		12.5%
	18.0%		1.3%	0.7%	13.3%	0.7%		2.7%			1.3%	1.3%		0.7%
n	3	-	-	-	1	-	-	-	-	-	-	-	-	2
	2.0%				0.8%									25.0%
	2.0%				0.7%									1.3%
ntendent	11	-	-	-	8	-	1	1	-	-	-	1	-	2
	7.3%				6.8%		50.0%	9.1%				14.3%		25.0%
	7.3%				5.3%		0.7%	0.7%				0.7%		1.3%
er	19	-	1	-	16	1	1	1	-	-	1	1	-	-
	12.7%		25.0%		13.6%	25.0%	50.0%	9.1%			20.0%	14.3%		
	12.7%		0.7%		10.7%	0.7%	0.7%	0.7%			0.7%	0.7%		
	3	-	-	-	2	-	-	-	-	-	-	-	-	-
	2.0%				1.7%									
	2.0%				1.3%									

NUATION OF TABLE 6B

ENSEN MARKETING/
AGEMENT CORPORATION
T SURVEY

What is your position with the company?

Q3a. What do you believe is the name of the company/companies that manufactures the keel cooler shown in the pictures?

	Total Resp.	Donavan Marine	Duramax/ Duramax Marine	East Park Radiator/ East Park	Fernstrum /R.W. Fernstrum	Fernstrum Grid-cooler	Grid-cooler	Johnson/ Johnson Marine	Johnson Rubber	Walter/ Walter Machine	Photos Provide Insuff. ID Info	Other	Misc.	DK/NS
AL	150	2	4	5	118	4	2	11	-	-	5	7	2	8
NDENTS	100.0%	100.0%	100.0%	100.0%	100.0%	100.0%	100.0%	100.0%			100.0%	100.0%	100.0%	100.0%
	100.0%	1.3%	2.7%	3.3%	78.7%	2.7%	1.3%	7.3%			3.3%	4.7%	1.3%	5.3%
Architect	3	1	-	-	1	-	-	-	-	-	-	-	1	-
	2.0%	50.0%			0.8%								50.0%	
	2.0%	0.7%			0.7%								0.7%	
	14	-	-	1	9	1	-	1	-	-	-	-	-	1
	9.3%			20.0%	7.6%	25.0%		9.1%						12.5%
	9.3%			0.7%	6.0%	0.7%		0.7%						0.7%
llaneous	1	-	-	-	-	1	-	-	-	-	-	-	-	-
	0.7%					25.0%								
	0.7%					0.7%								
know/not sure	1	-	-	-	-	-	-	-	-	-	-	-	-	-
	0.7%													
	0.7%													

INUATION OF TABLE # 6B

NSEN MARKETING/
GEMENT CORPORATION
SURVEY

rview Location

Q3a. What do you believe is the name of the company/companies that manufactures the keel cooler shown in the pictures?

	Total Resp.	Donavan Marine	Duramax/ Duramax Marine	East Park Radiator/ East Park	Fernstrum /R.W. Fernstrum	Fernstrum Grid-cooler	Grid-cooler	Johnson/ Johnson Marine	Johnson Rubber	Walter/ Walter Machine	Photos Provide Insuff. ID Info	Other	Misc.	DK/NS
L	150	2	4	5	118	4	2	11	-	-	5	7	2	8
DENTS	100.0%	100.0%	100.0%	100.0%	100.0%	100.0%	100.0%	100.0%			100.0%	100.0%	100.0%	100.0%
	100.0%	1.3%	2.7%	3.3%	78.7%	2.7%	1.3%	7.3%			3.3%	4.7%	1.3%	5.3%
a	31	-	-	-	21	1	2	1	-	-	1	2	1	5
	20.7%				17.8%	25.0%	100.0%	9.1%			20.0%	28.6%	50.0%	62.5%
	20.7%				14.0%	0.7%	1.3%	0.7%			0.7%	1.3%	0.7%	3.3%
a	11	-	-	-	8	-	-	-	-	-	-	1	-	1
	7.3%				6.8%							14.3%		12.5%
	7.3%				5.3%							0.7%		0.7%
ana	71	1	4	4	55	3	-	9	-	-	3	4	1	2
	47.3%	50.0%	100.0%	80.0%	46.6%	75.0%		81.8%			60.0%	57.1%	50.0%	25.0%
	47.3%	0.7%	2.7%	2.7%	36.7%	2.0%		6.0%			2.0%	2.7%	0.7%	1.3%
sippi	11	1	-	1	10	-	-	1	-	-	1	-	-	-
	7.3%	50.0%		20.0%	8.5%			9.1%			20.0%			
	7.3%	0.7%		0.7%	6.7%			0.7%			0.7%			
	26	-	-	-	24	-	-	-	-	-	-	-	-	-
	17.3%				20.3%									
	17.3%				16.0%									

ORENSEN MARKETING/MANAGEMENT CORPORATION
BOAT SURVEY

COLUMN NO.	TYPE/ HIGH	1	2	3	4	5	6	7	8	9	0	X	Y	REJ.	SIG.	QUAL. RESP.	TOTAL RESP.
105	(V-Y)	0	0	0	0	0	0	0	0	0	150	0	0	0	150	150	150
		0.0	0.0	0.0	0.0	0.0	0.0	0.0	0.0	0.0	100.0	0.0	0.0	0.0	100.0	100.0	100.0
106	(V-Y)	51	0	0	0	0	0	0	0	0	99	0	0	0	150	150	150
		34.0	0.0	0.0	0.0	0.0	0.0	0.0	0.0	0.0	66.0	0.0	0.0	0.0	100.0	100.0	100.0
107	(V-Y)	20	20	20	20	11	10	10	10	10	19	0	0	0	150	150	150
		13.3	13.3	13.3	13.3	7.3	6.7	6.7	6.7	6.7	12.7	0.0	0.0	0.0	100.0	100.0	100.0
108	(V-Y)	15	15	15	15	15	15	15	15	15	15	0	0	0	150	150	150
		10.0	10.0	10.0	10.0	10.0	10.0	10.0	10.0	10.0	10.0	0.0	0.0	0.0	100.0	100.0	100.0
111	(S-5)	31	11	71	11	26	0	0	0	0	0	0	0	0	150	150	150
		20.7	7.3	47.3	7.3	17.3	0.0	0.0	0.0	0.0	0.0	0.0	0.0	0.0	100.0	100.0	100.0
112	(S-3)	86	48	16	0	0	0	0	0	0	0	0	0	0	150	150	150
		57.3	32.0	10.7	0.0	0.0	0.0	0.0	0.0	0.0	0.0	0.0	0.0	0.0	100.0	100.0	100.0
113	(M-0)	1	5	4	1	1	24	6	2	1	3	0	0	105	48	150	150
		0.7	3.3	2.7	0.7	0.7	16.0	4.0	1.3	0.7	2.0	0.0	0.0	70.0	32.0	100.0	100.0
114	(M-Y)	32	10	2	6	1	18	5	18	6	2	1	3	50	104	150	150
		21.3	6.7	1.3	4.0	0.7	12.0	3.3	12.0	4.0	1.3	0.7	2.0	33.3	69.3	100.0	100.0
115	(M-9)	2	4	5	118	4	2	11	0	5	0	0	0	21	151	150	150
		1.3	2.7	3.3	78.7	2.7	1.3	7.3	0.0	3.3	0.0	0.0	0.0	14.0	100.7	100.0	100.0
116	(M-0)	0	0	0	0	0	0	0	7	2	8	0	0	133	17	150	150
		0.0	0.0	0.0	0.0	0.0	0.0	0.0	4.7	1.3	5.3	0.0	0.0	88.7	11.3	100.0	100.0
117	(M-0)	41	4	3	25	11	72	12	1	2	1	0	0	39	172	150	150
		27.3	2.7	2.0	16.7	7.3	48.0	8.0	0.7	1.3	0.7	0.0	0.0	26.0	114.7	100.0	100.0
118	(M-0)	5	0	0	0	0	1	2	2	6	0	0	0	134	16	150	150
		3.3	0.0	0.0	0.0	0.0	0.7	1.3	1.3	4.0	0.0	0.0	0.0	89.3	10.7	100.0	100.0
119	(M-6)	5	1	7	2	3	3	0	0	0	0	0	0	130	21	150	150
		3.3	0.7	4.7	1.3	2.0	2.0	0.0	0.0	0.0	0.0	0.0	0.0	86.7	14.0	100.0	100.0
120	(M-0)	0	0	0	0	0	0	0	11	26	1	0	0	112	38	150	150
		0.0	0.0	0.0	0.0	0.0	0.0	0.0	7.3	17.3	0.7	0.0	0.0	74.7	25.3	100.0	100.0
121	(S-2)	144	6	0	0	0	0	0	0	0	0	0	0	0	150	150	150
		96.0	4.0	0.0	0.0	0.0	0.0	0.0	0.0	0.0	0.0	0.0	0.0	0.0	100.0	100.0	100.0
122	(S-4)	19	70	61	0	0	0	0	0	0	0	0	0	0	150	150	150
		12.7	46.7	40.7	0.0	0.0	0.0	0.0	0.0	0.0	0.0	0.0	0.0	0.0	100.0	100.0	100.0

EN MARKETING/MANAGEMENT CORPORATION
BOAT SURVEY

UMN NO.	TYPE/ HIGH	1	2	3	4	5	6	7	8	9	0	X	Y	REJ.	SIG.	QUAL. RESP.	TOTAL RESP.
3	(S-0)	1	3	7	4	8	8	7	26	13	21	0	0	52	98	150	150
		0.7	2.0	4.7	2.7	5.3	5.3	4.7	17.3	8.7	14.0	0.0	0.0	34.7	65.3	100.0	100.0
4	(S-0)	16	4	15	1	9	1	1	3	0	0	0	0	100	50	150	150
		10.7	2.7	10.0	0.7	6.0	0.7	0.7	2.0	0.0	0.0	0.0	0.0	66.7	33.3	100.0	100.0
5	(M-0)	27	55	75	79	0	0	0	0	0	0	0	0	1	236	150	150
		18.0	36.7	50.0	52.7	0.0	0.0	0.0	0.0	0.0	0.0	0.0	0.0	0.7	157.3	100.0	100.0
6	(M-0)	11	11	5	1	11	4	6	4	8	2	0	0	87	63	150	150
		7.3	7.3	3.3	0.7	7.3	2.7	4.0	2.7	5.3	1.3	0.0	0.0	58.0	42.0	100.0	100.0
7	(M-0)	8	27	3	11	19	3	3	14	1	1	0	0	63	90	150	150
		5.3	18.0	2.0	7.3	12.7	2.0	2.0	9.3	0.7	0.7	0.0	0.0	42.0	60.0	100.0	100.0
8	(V-Y)	0	0	53	0	0	0	97	0	0	0	0	0	0	150	150	150
		0.0	0.0	35.3	0.0	0.0	0.0	64.7	0.0	0.0	0.0	0.0	0.0	0.0	100.0	100.0	100.0
9	(V-Y)	0	11	0	0	0	31	26	0	11	71	0	0	0	150	150	150
		0.0	7.3	0.0	0.0	0.0	20.7	17.3	0.0	7.3	47.3	0.0	0.0	0.0	100.0	100.0	100.0
0	(V-Y)	5	0	45	8	52	25	0	0	0	15	0	0	0	150	150	150
		3.3	0.0	30.0	5.3	34.7	16.7	0.0	0.0	0.0	10.0	0.0	0.0	0.0	100.0	100.0	100.0
1	(V-Y)	5	5	13	13	26	22	12	13	6	35	0	0	0	150	150	150
		3.3	3.3	8.7	8.7	17.3	14.7	8.0	8.7	4.0	23.3	0.0	0.0	0.0	100.0	100.0	100.0
2	(V-Y)	26	20	14	13	3	8	9	11	25	21	0	0	0	150	150	150
		17.3	13.3	9.3	8.7	2.0	5.3	6.0	7.3	16.7	14.0	0.0	0.0	0.0	100.0	100.0	100.0
3	(S-1)	1	0	0	0	0	0	0	0	0	0	0	0	149	1	150	150
		0.7	0.0	0.0	0.0	0.0	0.0	0.0	0.0	0.0	0.0	0.0	0.0	99.3	0.7	100.0	100.0

TR EMARK EXAMINATION WORKS ET

☑ AMENDMENT STAGE ☐ NO CHANGE ☐ PUBLICATION/REGISTRATION STAGE

Name: Theresa Williams L.O. 114 Date 11/30/1999 Serial No: 75/158,145

INSTRUCTIONS: Place a check mark in the appropriate column and/or box to indicate which data elements have been amended/coded.

Legal Instrument Examiner (LIE)

	Amended	Data Element	
Class Data		☐ Prime/International Class	☐ Goods and Services
		☐ First Use Date	☐ First Use in Commerce Date
		☐ In Another Form	☐ Certification
		☐ 1b	
Mark Data		☐ Word Mark	☐ Pseudo Mark
		☐ Mark Drawing Code	☐ Design Search Code
		☐ Sizing/Lining Code	
Misc. Mark Data		☐ Mark Description	☐ Disclaimer
		☐ Lining/Stippling	☐ Name/Portrait/Consent
		☐ Translation	
Section 2(f)		☑ Section 2(f) Entire Mark	
		☐ Section 2(f) Limitation Statement	☐ Section 2(f) in Part
		☐ Amended Register	☐ Amended Register Date
Foreign Reg. Data		☐ Foreign Country	☐ 44(d)
		☐ Foreign Application Number	☐ Foreign Application Filing Date
		☐ Foreign Registration Number	☐ Foreign Registration Date
		☐ Foreign Registration Expiration Date	☐ Foreign Renewal Reg. Number
		☐ Foreign Reg. Renewal Expiration Date	☐ Foreign Renewal Reg. Date
Owner Data		☐ Owner Name	☐ DBA/AKA/TA
		☐ Address 1	☐ Address 2
		☐ City	☐ State
		☐ Zip Code	
		☐ Citizenship	☐ Entity
		☐ Entity Statement	☐ Composed of
		☐ Assignment(s)/Name Change	
Amd/Corr Restr.		☐ Concurrent Use	
Prior U.S. Reg.		☐ Prior Registration	
Correspondence		☐ Attorney	☐ Domestic Representative
		☐ Attorney Docket Number	
		☐ Correspondence Firm Name/Address	

I certify that all corrections have been entered in accordance with text editing guidelines.

_____ 11/30/1999
LIE DATE

Other: _____

☐ AMENDMENT STAGE ☐ NO CHANGE ☑ PUBLICATION/REGISTRATION STAGE

Name: CASSAUNDRA ROBERTS L.O. 114 Date 1/26/07 **Serial No.** 75/ 71581 S

INSTRUCTIONS: Place a check mark in the appropriate column and/or box to indicate which data elements have been amended/coded.

Legal Instrument Examiner (LIE)

	Amended	Data Element	
Class Data		☐ Prime/International Class	☐ Goods and Services
		☐ First Use Date	☐ First Use in Commerce Date
		☐ In Another Form	☐ Certification
		☐ 1b	
Mark Data	✓	☐ Word Mark	☐ Pseudo Mark
		☑ Mark Drawing Code	☐ Design Search Code
		☐ Sizing/Lining Code	
Misc. Mark Data		☐ Mark Description	☐ Disclaimer
		☐ Lining/Stippling	☐ Name/Portrait/Consent
		☐ Translation	
Section 2(f)		☐ Section 2(f) Entire Mark	
		☐ Section 2(f) Limitation Statement	☐ Section 2(f) in Part
		☐ Amended Register	☐ Amended Register Date
Foreign Reg. Data		☐ Foreign Country	☐ 44(d)
		☐ Foreign Application Number	☐ Foreign Application Filing Date
		☐ Foreign Registration Number	☐ Foreign Registration Date
		☐ Foreign Registration Expiration Date	☐ Foreign Renewal Reg. Number
		☐ Foreign Reg. Renewal Expiration Date	☐ Foreign Renewal Reg. Date
Owner Data		☐ Owner Name	☐ DBA/AKA/TA
		☐ Address 1	☐ Address 2
		☐ City	☐ State
		☐ Zip Code	
		☐ Citizenship	☐ Entity
		☐ Entity Statement	☐ Composed of
		☐ Assignment(s)/Name Change	
Amd/Corr Restr.		☐ Concurrent Use	
Prior U.S. Reg.		☐ Prior Registration	
Correspondence		☐ Attorney	☐ Domestic Representative
		☐ Attorney Docket Number	
		☐ Correspondence Firm Name/Address	

I certify that all corrections have been entered in accordance with text editing guidelines.

CL
LIE

1/26/07
DATE

Other: _____

UNITED STATES DEPARTMENT OF COMMERCE
Patent and Trademark Office

ASSISTANT COMMISSIONER FOR TRADEMARKS
2900 Crystal Drive
Arlington, Virginia 22202-3513

Feb 18, 2000

NOTICE OF PUBLICATION UNDER 12(a)

1. Serial No.:
   75/715,815

2. Mark:
   Miscellaneous Design

3. International Class(es):
   7

4. Publication Date:
   Mar 21, 2000

5. Applicant:
   R. W. Fernstrum & Company

The mark of the application identified appears to be entitled to registration. The mark will, in accordance with Section 12(a) of the Trademark Act of 1946, as amended, be published in the Official Gazette on the date indicated above for the purpose of opposition by any person who believes he will be damaged by the registration of the mark. If no opposition is filed within the time specified by Section 13(a) of the Statute or by rules 2.101 or 2.102 of the Trademark Rules, the Commissioner of Patents and Trademarks may issue a certificate of registration.

Copies of the trademark portion of the Official Gazette containing the publication of the mark may be obtained at $38.00 each for domestic orders, or at $47.50 each for foreign orders from:

The Superintendent of Documents
U.S. Government Printing Office
PO Box 371954
Pittsburgh, PA 15250-7954
Phone: (202)512-1800

By direction of the Commissioner.

Int. Cl.: 7

Prior U.S. Cls.: 13, 19, 21, 23, 31, 34 and 35

Reg. No. 2,357,354

United States Patent and Trademark Office

Registered June 13, 2000

TRADEMARK
PRINCIPAL REGISTER

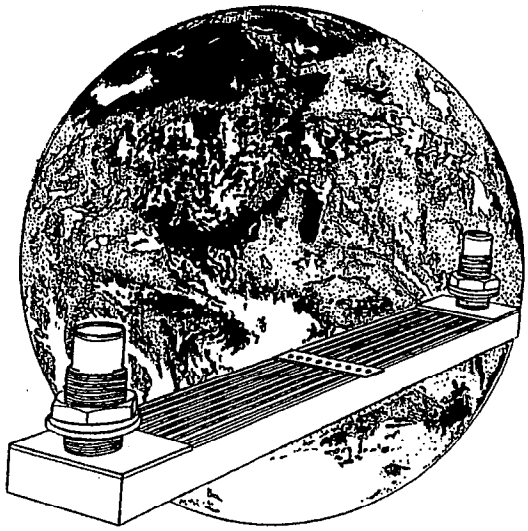

R. W. FERNSTRUM & COMPANY (MICHIGAN CORPORATION)
1716 ELEVENTH AVENUE
P.O. BOX 97
MENOMINEE, MI 498580097

FOR: EXTERNAL COOLING SYSTEM FOR MARINE ENGINES, NAMELY, HEAT EXCHANGERS, IN CLASS 7 (U.S. CLS. 13, 19, 21, 23, 31, 34 AND 35).

FIRST USE 0-0-1980; IN COMMERCE 0-0-1980.

SEC. 2(F).

SER. NO. 75-715,815, FILED 5-28-1999.

JILL C. ALT, EXAMINING ATTORNEY

APPLICANT R. W. Fernstrum & Company

ADDRESS 1716 Eleventh Avenue
P.O. Box 97
Menominee, Michigan 49858-0097

FIRST USE 1980 IN COMMERCE 1980

GOODS OR SERVICES External cooling systems for marine engines, namely, heat exchangers.

[redacted]

05-28-1999
U.S. Patent & TMOfc/TM Mail Rcpt Dt. #10

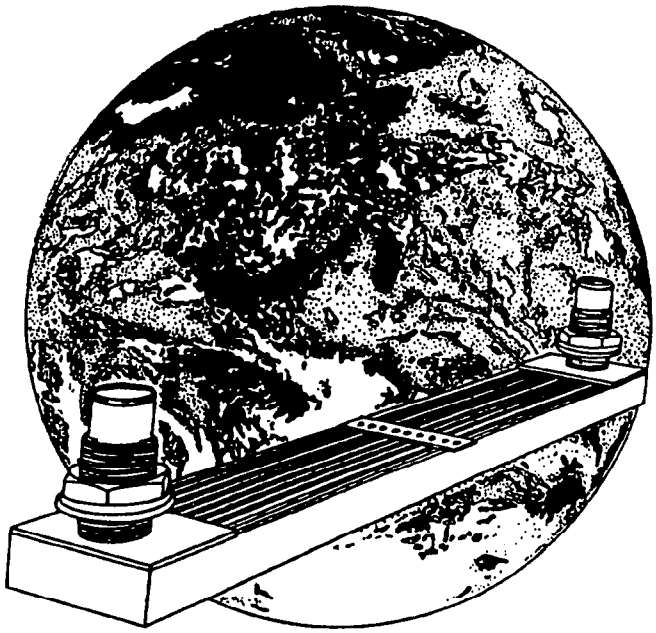

TRADEMARK

[redacted]

75715815

#	Total Marks	Dead Marks	Live Viewed Docs	Live Viewed Images	Status/ Search Duration	Search
01	1	0	1	1	0:01	"75715815"[SN]
02	4869	N/A	0	0	0:01	"010702"[DC]
03	400	N/A	0	0	0:01	"140125"[DC]
04	6	1	5	5	0:01	2 AND 3
05	406	N/A	0	0	0:01	"130325"[DC]
06	2	0	2	2	0:01	2 AND 5

Session started 9/26/99 3:04:50 PM
Session finished 9/26/99 3:11:56 PM
Total search duration 0:06 minutes
Session Duration 7:06 minutes

Default NEAR limit= 1 ADJ limit= 1

NOTES TO THE FILE AND APPROVALS

DATE	(All Entries Should Be Dated and Initialed)

CONTENTS CONTINUED

	Entity	Date	Amount
31.			
32.			
33.			
34.			
35.			
36.			
37.			
38.			
39.			
40.			
41.			
42.			
43.			
44.			
45.			
46.			
47.			
48.			
49.			
50.			
51.			
52.			
53.			
54.			
55.			
56.			
57.			
58.			
59.			
60.			

75715815

SER219

NEW CASE DELIVERED

SEP 21 1999

LAW OFFICE 104

TRADEMARK

[redacted]

75715815

CONTENTS

	Entry	Date	Initials
1.			CK
2.	Amdt, Encl DEC -2 1999 TM	10/1/99	✓
3.	NOP		
4.	03/21/00		
5.			
6.			
7.			
8.			
9.			
10.			
11.			
12.			
13.			
14.			
15.			
16.			
17.			
18.			
19.			
20.			
21.			
22.			
23.			
24.			
25.			
26.			
27.			
28.			
29.			
30.			

See inside of file for additional entries

04 JUL 30 PM 11:08

IN THE UNITED STATES PATENT AND TRADEMARK OFFICE
BEFORE THE TRADEMARK TRIAL AND APPEAL BOARD

DURAMAX MARINE, LLC ,	)	
	)	
Opposer,	)	
	)	
v.	)	Opposition No. 119,899
	)	
R.W. FERNSTRUM & COMPANY,	)	
	)	
Applicant.	)	

APPLICANT'S SECOND NOTICE OF
RELIANCE UNDER TRADEMARK RULE 2.122(e)

Applicant hereby notifies Opposer of its reliance on the attached copies of the following patents:

1. Patent No. 2,356,844 for "heat dissapator for marine engines";
2. Patent No. 2,415,154 for "outboard engine cooling device";
3. Patent No. 2,612,858 for "marine engine water cooler";
4. Patent No. 2,976,834 for "marine heat exchanger";
5. Patent No. 3,177,936 for "fluted heat exchange tube with internal helical baffle";
6. Patent No. 3,240,179 for "cooler";
7. Patent No. 3,841,396 for "finned heat exchanger and system";
8. Patent No. 4,557,319 for "marine keel cooler"; and,
9. Patent No. 6,575,227 for "heat exchanger".

The patents demonstrate the variety of alternative designs available for marine heat exchangers.

R. W. FERNSTRUM & COMPANY

Date: July 26, 2004

Samuel D. Littlepage, Esq.
Marc A. Bergsman, Esq.
Dickinson Wright PLLC
1901 L Street, N.W., Suite 800
Washington, D.C. 20036
(202) 659-6944
Mbergsman@dickinsonwright.com

Attorneys for Applicant

Certificate Of Service

I hereby certify that one copy of Applicant's Second Notice Of Reliance Under Trademark Rule 2.122(e) was mailed by first class mail, postage prepaid, this 30th day of July, 2004, to:

D. Peter Hochberg, Esq.
D. Peter Hochberg Co., L.P.A.
The Baker Building, Sixth Floor
1940 East Sixth Street
Cleveland, Ohio 44114

Regina Martin

DC 71119-37 94793

2356844

Aug. 29, 1944. A. J. HIGGINS 2,356,844

HEAT DISSIPATOR FOR MARINE ENGINES

Filed May 11, 1942

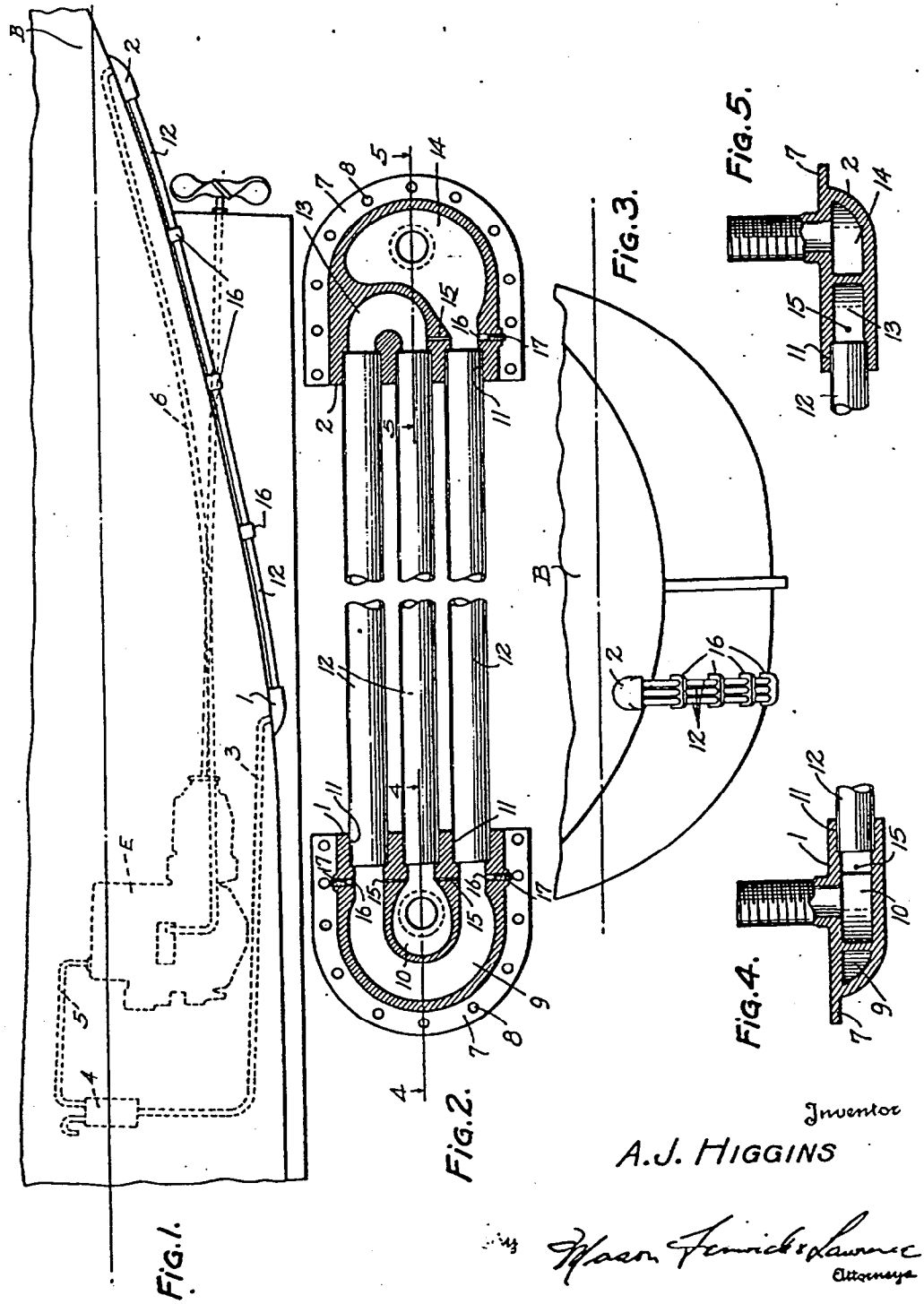

Fig. 1.

Fig. 2.

Fig. 3.

Fig. 4.

Fig. 5.

Inventor

A. J. HIGGINS

Mason, Fenwick & Lawrence

Attorneys

Patented Aug. 29, 1944

2,356,844

UNITED STATES PATENT OFFICE

2,356,844

HEAT DISSIPATOR FOR MARINE ENGINES

Andrew Jackson Higgins, New Orleans, La.

Application May 11, 1942, Serial No. 442,526

1 Claim. (Cl. 257—124)

This invention relates to heat dissipators and more particularly to heat dissipators for the cooling system of internal combustion engines used in connection with vessels operating in salt water where a closed fresh water cooling system is utilized.

In connection with such systems it has been found that under heavy duty conditions steam is apt to develop in the water cooling system and where such steam does develop it is likely to form steam pockets in the condenser unit especially where such units include as usual a circuitous passage to increase the effective length of the cooling tubes and such steam pockets when they do develop, choke the circulatory system and prevent the functioning thereof.

The object of the present invention is to provide an improved construction and arrangement of the heat dissipator unit whereby the formation of such steam pockets is effectively prevented and the general efficiency of the device improved.

The invention consists in the novel construction, arrangement and combinations of parts as hereinafter more particularly described and claimed.

One sheet of drawings accompanies this specification in which like reference characters indicate like parts throughout:

Figure 1 is a fragmentary side elevation of the stern portion of a vessel showing the application of the present invention;

Figure 2 is a horizontal cross section through a heat dissipator unit;

Figure 3 is a fragmentary end view looking forward of the showing in Figure 1;

Figure 4 is a vertical longitudinal cross section on the lower header taken on line 4—4 of Figure 2; and

Figure 5 is a vertical longitudinal cross section taken through the upper header and on line 5—5 of Figure 2.

Referring to the drawing, B represents the stern portion of a vessel in which E indicates the internal combustion engine.

The heat dissipator unit comprises a lower header 1 and an upper header 2, the lower header being connected as by a pipe 3 with a reservoir 4 for fresh water which in turn is connected by pipe 5 with the circulatory cooling system of the engine E. The engine cooling system is further connected by pipe 6 with the upper header 2 and the headers 1 and 2 are connected by cooling pipes 12.

Each of the headers 1 and 2 comprises a main body portion having an externally directed flange 7 provided with a plurality of holes 8 through which bolts or lag screws can be passed to secure the header to the bottom of the vessel. The body portion of each header is provided with a plurality of channels so arranged as to provide in conjunction with the connecting pipes 12 a circuitous passage for the cooling medium.

In the embodiment herein illustrated the lower header 1 is connected centrally with the pipe 3 which communicates with a central passage 10 in the header which central passage is surrounded by an annular passage 9. Both of the passages 9 and 10 communicate with the exterior of the header through slightly enlarged sockets 11 adapted to receive and seat the ends of pipes 12. The upper header 2 is similarly provided with a plurality of passages 13 and 14, the openings of which are similarly provided with sockets 11 for the pipes 12. In the case of the upper header 2 the passages 13 and 14 are arranged side by side so that the cooling medium which enters the central passage 10 of the lower header will normally flow through the middle tube 12 and enter passage 13 of the upper header from whence it will pass through the upper tube 12 and enter the passage 9 of the lower header and from there will pass through the lower tube 12 and be delivered into the passage 14 which communicates with the pipe 6 and thence to the engine.

In operation, the heat dissipator as thus described and which, up to this point, is more or less conventional will under heavy service or abnormal duty be likely to form steam pockets especially in the passage 10 of the lower header where the hottest steam is delivered and in the passage 13 of the upper header where it is calculated to flow by reason of the upward inclination of the cooling pipes. The pressure in such steam pockets is greatly in excess of the pressure in the chambers 9 and 14 of the headers which contain the relatively cooler water having traversed a substantial portion of the condenser tubes.

To prevent the accumulation of steam in the chambers 10 and 13 the present invention contemplates the provision of relatively small bleeder passages 15 positioned in the walls separating chambers 9 and 10 of the lower header and 13 and 14 of the upper header. Such bleeder passages 15 can be readily provided in such header units which are normally formed as castings by drilling passages 16 in the outer wall to admit a drill and then after the passages 15 have been drilled in the inner walls threading the passages 16 and plugging same with screw plugs 17.

The provision of the bleeder passages 15 will not interfere with the normal circulation of the

cooling medium by reason of their relatively small size, but will upon new increase of pressure in chambers 10 or 13 by reason of the formation and delivery of steam thereto permit the bleeding of such excess pressure into the chambers 9 and 14, respectively, thus assuring a substantially equalized pressure between the chambers 9 and 10 of the lower header and 13 and 14 of the upper header and the effective prevention of the formation of steam pockets.

Where the condenser tubes 12 are of substantial length it is usual to provide supporting brackets 16 intermediate the headers but these are not related to the present invention.

Various modifications and the precise arrangement and construction of the headers and the means of providing the bleeder passage will readily suggest themselves, to those skilled in the art, but all within the scope of the present invention as claimed.

What I claim is:

Heat dissipator for the cooling medium of a marine combustion engine, comprising headers, each formed with a chamber having a port adapted to be connected with the engine circulatory cooling system and an arcuate chamber adjacent the ported chamber, the ported chambers and the ends of the arcuate chambers communicating by parallel pipes to form a continuous serpentine passage from port to port, with bleeder vents communicating the chambers in each header, as specified.

ANDREW JACKSON HIGGINS.

BEST COPY

Feb. 4, 1947. G. WALTER 2,415,154

OUTBOARD ENGINE COOLING DEVICE

Filed Nov. 26, 1943 3 Sheets-Sheet 1

Fig. 1.

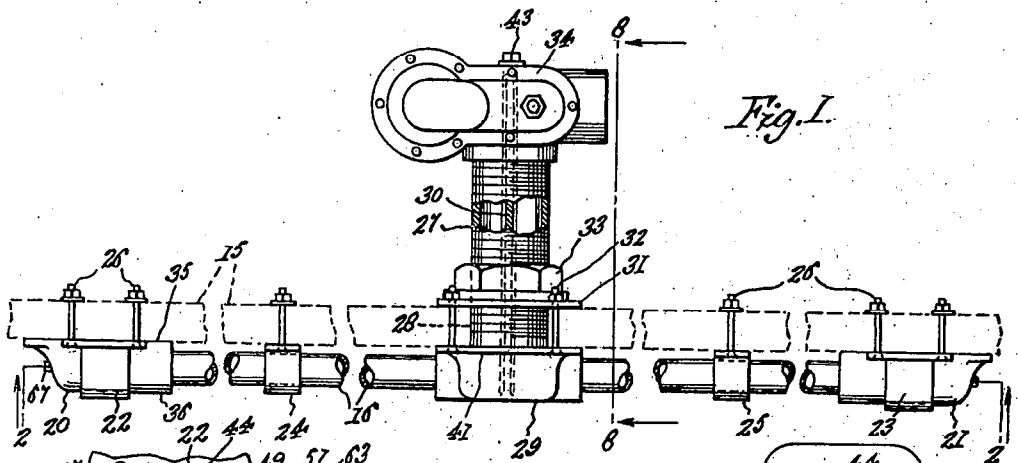

Fig. 2.

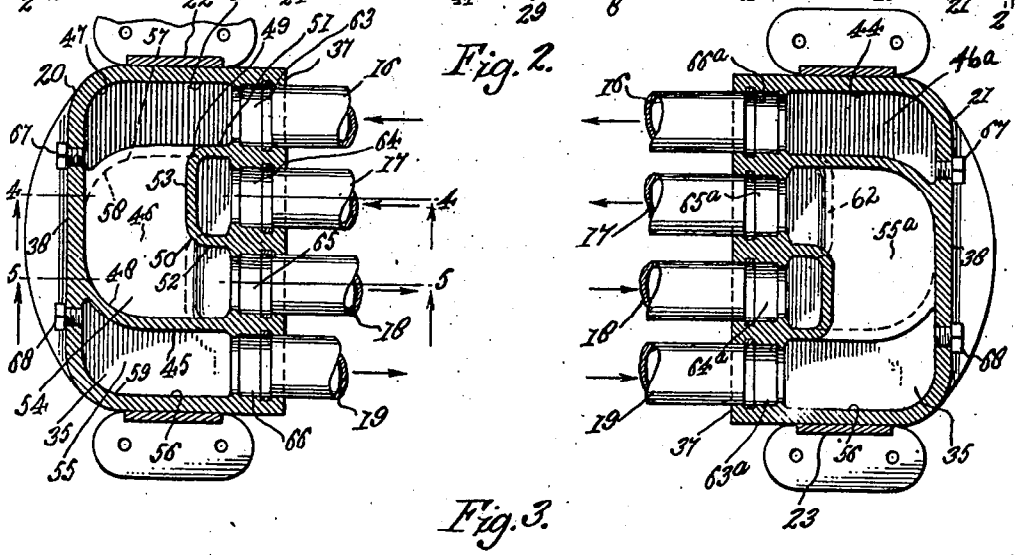

Fig. 3.

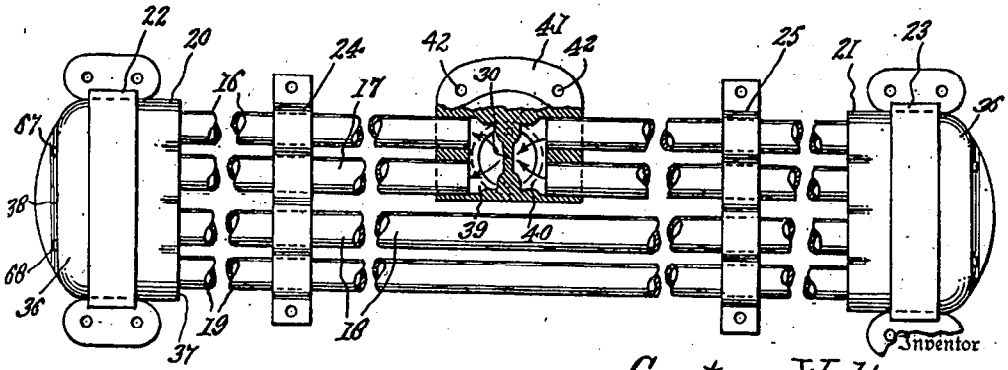

Inventor

Gustave Walter

By Mawhinney & Mawhinney

Attorneys.

Feb. 4, 1947. G. WALTER 2,415,154

OUTBOARD ENGINE COOLING DEVICE

Filed Nov. 26, 1943 3 Sheets-Sheet 2

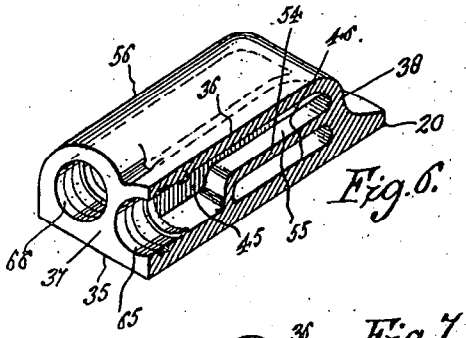

Fig. 6.

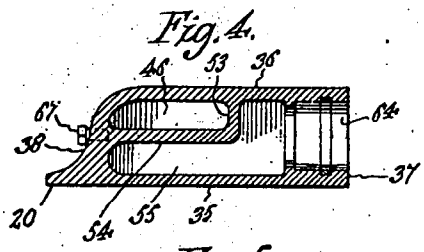

Fig. 4.

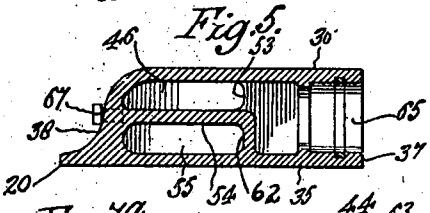

Fig. 5.

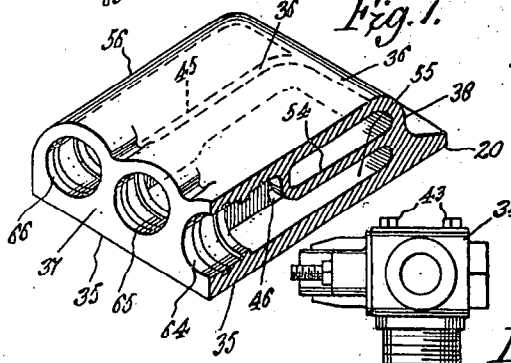

Fig. 7.

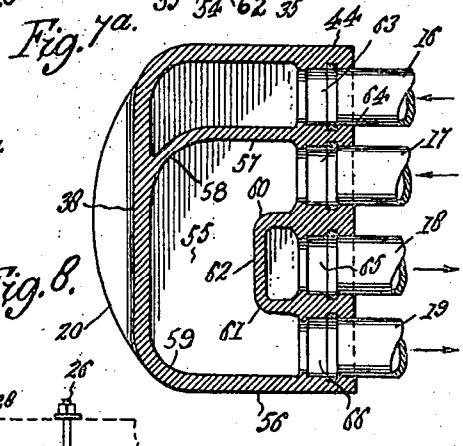

Fig. 7a.

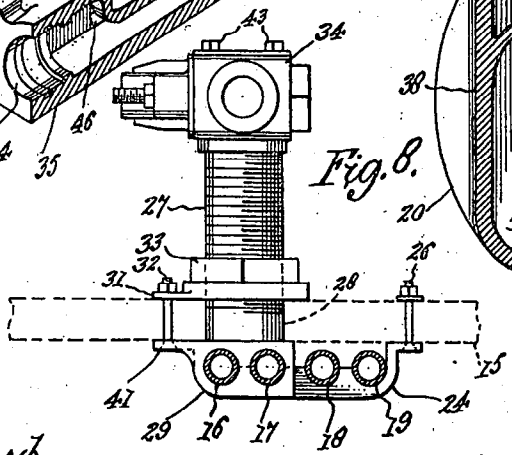

Fig. 8.

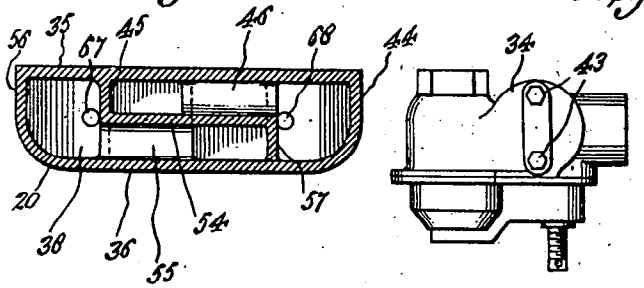

Fig. 7b.

Fig. 9.

Inventor

Gustave Walter

By Mawhinney & Mawhinney

Attorneys.

Feb. 4, 1947. G. WALTER 2,415,154

OUTBOARD ENGINE COOLING DEVICE

Filed Nov. 26, 1943 3 Sheets-Sheet 3

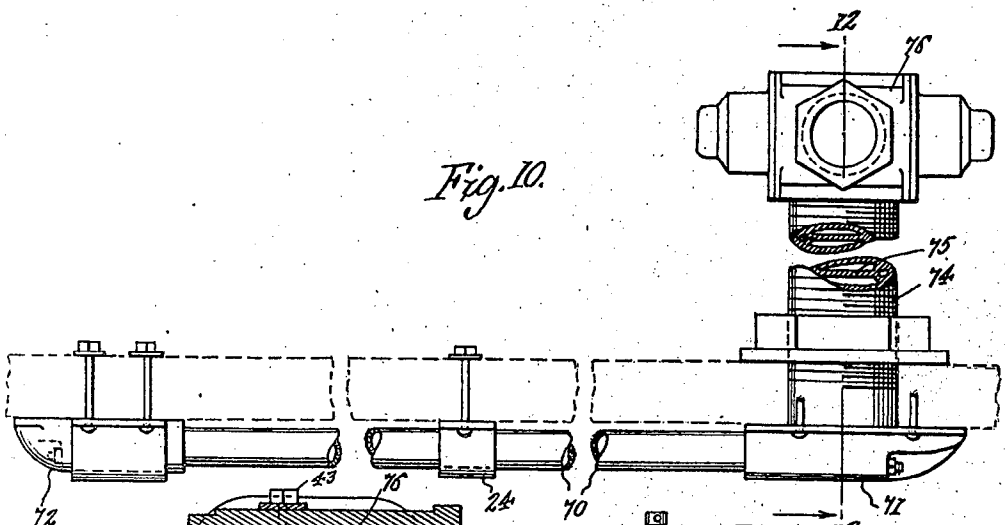

Fig. 10.

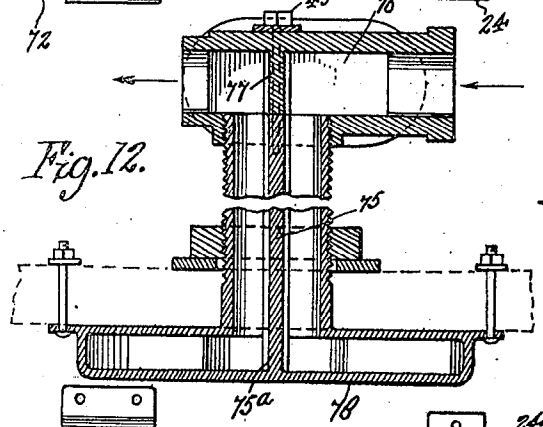

Fig. 12.

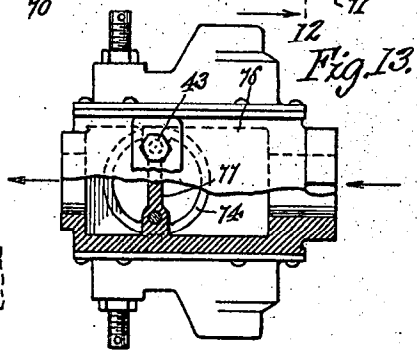

Fig. 13.

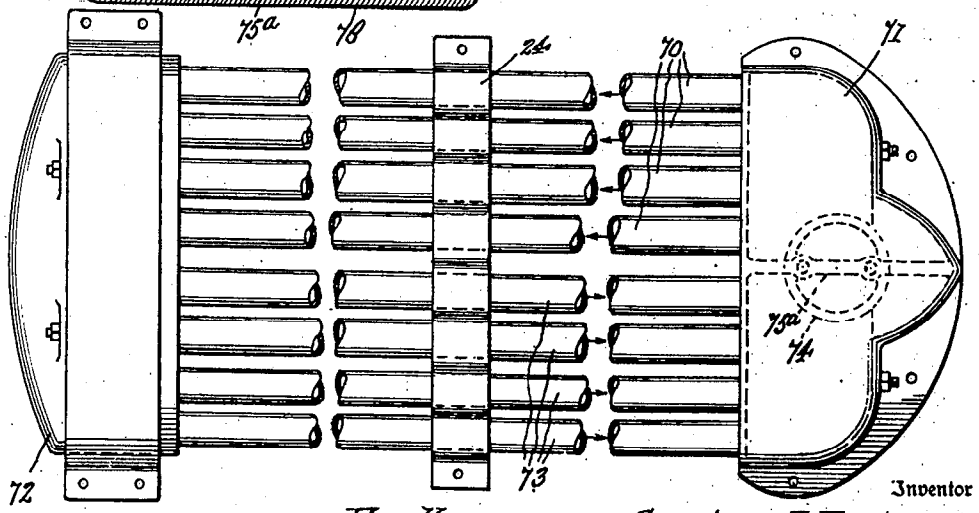

Fig. 11.

Inventor

Gustave Walter

By Mawhinney & Mawhinney

Attorneys.

Patented Feb. 4, 1947

2,415,154

UNITED STATES PATENT OFFICE

2,415,154

OUTBOARD ENGINE COOLING DEVICE

Gustave Walter, Jersey City, N. J.

Application November 26, 1943, Serial No. 511,834

1 Claim. (Cl. 257—124)

1

The present invention relates to improvements in outboard engine cooling device, and constitutes certain improvements over my prior invention as disclosed in my prior Patent No. 2,258,526, granted October 7, 1941.

The present invention has for its purposes and objects, those set forth in my prior patent aforesaid, in addition to those hereinafter set forth.

It is an object of the present invention to increase the cooling capacity of the prior device and thereby to enhance the effectiveness of the device as a heat exchanger in cooling the engine jacket water; this to the end of preventing overheating of the engine and the incidental damage and disasters resulting therefrom.

In outboard motor coolers the problem of increasing heat exchange capacity cannot be directly and immediately solved by mathematical enlargement of the volume capacity of the cooler, for the reason that the external placement of the cooler with respect to the boat hull interposes a drag element and an increase in skin friction which cannot be enlarged in area without proportionately reducing speed and maneuverability performance factors of the boat at such a ratio that the material enlargement of the cooler area is prohibited.

A further object of the invention is to overcome and solve this problem in the production of an external cooling assembly which will possess the necessary volumetric capacity but which is so constructed and arranged relatively to the hull and keel of the boat and to the various members of the cooler assembly as to retain the drag and skin friction factors within a minimum so as not to interfere in any substantial way with the effective speed of the boat and its maneuverability.

A further object of the invention is to provide an improved cooler unit and assembly in combination with an improved inlet and outlet assembly which results in the delivery of the incoming water simultaneously to a plurality of small diameter tubes, the inlet and outlet unit also being so constructed and arranged as to accommodate the effluent by withdrawing the same simultaneously from a plurality of such tubes.

A still further object of the invention resides in providing an improved form of terminal header fitting in which the rate of flow of the water to and from all of the cooling tubes will be substantially uniform, thus avoiding stagnation zones which interfere with the uniformity of flow rate and correspondingly decrease the cooling effect of the unit as a whole.

With the foregoing and other objects in view,

2

the invention will be more fully described hereinafter, and will be more particularly pointed out in the claim appended hereto.

In the drawings, wherein like symbols refer to like or corresponding parts throughout the several views,

Figure 1 is a side elevation, with parts broken away and parts shown in section of an improved outboard engine cooling device constructed in accordance with the present invention, and shown as applied to a boat hull or keel indicated in broken lines.

Figure 2 is a horizontal section taken on the line 2—2 in Figure 1 with the intermediate portions of the tubes broken away and with the inlet and outlet unit omitted.

Figure 3 is a bottom plan view, with parts broken away and parts shown in section of the device of Figure 1.

Figure 4 is a vertical section taken on the line 4—4 in Figure 2.

Figure 5 is also a vertical section taken on the line 5—5 in Figure 2.

Figure 6 is a perspective view, partly broken away and partly shown in section, of one of the improved terminal header fittings.

Figure 7 is a similar view taken through another chamber of the terminal header fitting.

Figure 7*a* is a horizontal cross-section taken through the left header of Figure 2 through the lower passage.

Figure 7*b* is a longitudinal section through the header.

Figure 8 is a vertical transverse section taken on the line 8—8 in Figure 1.

Figure 9 is a top plan view of the inlet and outlet thermostatic cap.

Figure 10 is a view similar to Figure 1 but showing a modification.

Figure 11 is a bottom plan view of the device shown in Figure 10.

Figure 12 is a transverse vertical section taken on the line 12—12 in Figure 10, and

Figure 13 is a top plan view of the inlet and outlet cap, partly broken away and partly shown in section.

Referring more particularly to the drawings, and for the present to Figures 1 to 9 inclusive, 15 shows in broken lines the hull or keel of a boat to which the device may be secured in any suitable manner, as for instance shown and described in my prior patent aforesaid.

The external unit or cooler assembly is, in this particular embodiment of the invention, made up of four copper or other tubes 16, 17, 18 and

19 of relatively small diameter so as to be susceptible of close grouping with respect to one another and of fitting closely against the external skin of the keel or hull 15 to avoid a bulky enlargement. The opposite ends of the four tubes are fitted in the terminal header fittings 20 and 21. These headers 20 and 21 are secured to the hull or keel 15 by means of end clamps 22 and 23. Intermediate clamps 24 and 25 serve to support the tubes. Bolts 26 secure the clamps to the hull or keel 15; or any other fastenings may be employed for the purpose.

A stand pipe 27 passes through the single opening 28 made in the hull 15 and this stand pipe rises from a base fitting 29. Within the base fitting and stand pipe 27 is a partition 30 (Figure 3), and in this respect the stand pipe is similar in all respects to that illustrated and described in my prior patent aforesaid, with the exception that, as shown in Figure 3, the two chambers of the stand pipe 27 at opposite sides of the partition 30 have cross-sectional capacity substantially equal to that of two of the tubes of the cooling unit so that the inlet chamber 39 may communicate simultaneously with two of the tubes, for instance, the tubes 16 and 17 for the simultaneous delivery thereto of the incoming hot water from the water jacket of the engine installed to drive the boat. This engine is not shown herein but its relative connection with the stand pipe is fully disclosed in my prior patent aforesaid. In a similar way the outlet chamber 40 at the other side of the partition 30 communicates simultaneously with the two tubes 16 and 17 at the other side of the base fitting 29.

A plate 41 of the base fitting 29 engages the hull 15 and is formed with openings 42 to receive the bolts 32 by which the base fitting 29 is held to the hull 15. The bolts 32 pass through an inside plate 31 which is perforated to surround the stand pipe 27. A washer and nut assembly 33 is fitted to the externally threaded stand pipe 27 and bears upon the inside plate 31. The stand pipe and its base fitting 29 constitute a combined inlet and outlet fitting coordinated in one element which therefore requires only the one opening 28 through the hull 15 to set up communication with the external cooler and the internal engine water jacket.

The outlet cap or thermostatic head 34 may be similar to that shown and described in my prior patent aforesaid and may be held onto the stand pipe by bolts 43 according to the construction more particularly shown in such prior patent.

Referring more particularly to Figures 2, 4, 5, 6 and 7, the improved terminal header 20 may conveniently be made from a casting of metal or other suitable material in which 35 designates the top wall, 36 the bottom wall and 37 and 38 the front and rear walls respectively. This casting is cored out to provide passages for receiving and reversing the flow of the water.

As shown in Figure 2 an end wall 44 cooperates with a septum or partition 45 to create a substantially U-shaped passage or chamber 46 placing the left ends of tubes 16 and 18 in communication. In other words water flowing as indicated by the arrow in Figure 2 toward the left in end tube 16 will enter passage 46, wherein its direction of flow will be reversed, and directed outwardly through intermediate tube 18, through which the water will traverse the full length of the cooler and emerge at the opposite header 21. The inside surface of end wall 44 is shown in

Figure 2 with a curvilinear section 47 where the end wall 44 merges with the back wall 38. In a similar way a curvilinear section 48 is made between back wall 38 and the partition 45. Opposed to the curvilinear sections 47 and 48, which are concave, are the mutually and complementally curved convex surfaces 49 and 50 made between the external surfaces of the partition walls 51 and 52 and the connecting partition web 53. Thus the passage 46 is free of all angles, corners or obstructions which would tend to interfere with the free flow of the stream from the one tube to the other.

As shown in Figure 4 the passage 46 is in the upper half of the casting and is separated by a horizontal septum or partition 54 from a bottom passage 55 which connects tubes 17 and 19, as indicated in Figure 2. Reverting to Figure 4, the rear end of the horizontal partition 54 merges with the back wall 38 of the casting. The front wall of the horizontal partition 54 merges with the lower end of the vertical partition 53. The upper edge of the vertical partition 53 merges with the roof 36 of the casting.

Again referring to Figure 2 and to Figure 7*a*, the lower passage 55 is shown as setting up communication between the intermediate tube 17 and the end tube 19. The end wall 56 forms part of this passage together with the rear wall 38 and an intermediate partition 57 shown in dotted lines in Figure 2 and in full lines in Figure 7*a*. This intermediate partition 57 as to height extends up from the bottom 36 only as high as the horizontal partition 54 with which its upper edge merges. Curvilinear sections 58 and 59 are formed in the passage 55 and curved convex surfaces 60 and 61 are made opposite these sections on the corner portions of the partition 62. The partition 62 is shown in dotted lines in Figure 2 and in full lines in Figures 5 and 7*a*.

The resultant of this construction is that cross-over passages 46 and 55 are provided in the header 20 in which passage 46 is in the upper half of the casting and passage 55 in the lower half; passage 46 establishing communication between the ends of an end tube 16 and an intermediate tube 18, and passage 55 establishing communication between an intermediate tube 17 (companion of tube 16) and an end tube 19 (companion of tube 18).

In this way two tubes 16 and 17 carry the volume flow in one direction and two tubes 18 and 19 carry the volume flow in the opposite direction; in contrast to the single tube in the prior patented device for carrying the flow in each direction. In this way volumetric capacity may be greatly increased without increasing tube diameter sizes. The tubes may be retained of small diameter to lie closely against the hull thus forming minimum obstruction.

Consequently the arrangement of tubes and headers forms a multiple flow keel cooling system. The tube sockets of the header 20 are shown at 63, 64, 65 and 66, such sockets receiving respectively the tubes 16, 17, 18 and 19.

The header 21 at the opposite end of the cooler is formed precisely like the header 20 but is faced in the opposite directions so that its corresponding tube sockets 63ª, 64ª, 65ª and 66ª are reversed.

The arrangement of the passages is the same in both headers 20 and 21. The upper cross-over passage 46ª in header 21 connects tubes 19 and 17; while the lower cross-over passage 55ª connects the tubes 18 and 16.

Screw clean-out plugs 67 and 69 are provided in the end wall 38 of each header at such spaced

points that one plug will communicate with an upper passage 48 and the other with a lower passage 55.

In operation, hot water entering the cap 34 from the water jacket of the boat engine descends through the duct 39 at one side of the partition 30 in the stand pipe 27 and is directed by this duct 39 to the tubes 16 and 17, part of this incoming volume being absorbed by each of the two relatively small diameter tubes 16 and 17. These tubes also have greater external cooling surface exposed to the sea water than would one large tube of equal capacity. The divided hot fresh water thus flows in parallel masses in tubes 16 and 17 in the direction of the arrows shown in Figure 2 until reaching left header 20 by which the direction of flow is reversed and the stream re-circulated in the opposite direction through tubes 18 and 19 completely across the device to the other header 21. In this header 21 the direction of flow is again reversed through 180° and the water circulated back through the other halves of tubes 16 and 17 to the base fitting 29 and thence to the ascending or riser duct 40 to the right side of partition 30 in stand pipe 27. Then the cooled water ascends into the cap 34 and is by this cap directed to the engine water jacket in a manner more fully described and shown in my prior patent previously referred to.

The device constitutes the multiple flow cooling system in which the mass of water to be cooled is split up and carried in two or more tubes in order to properly handle the volume.

When using a multiple flow system, the velocity of the water which is carried through the tubes and which is guided to reverse directions by the terminal header fittings, assumes a parabolic action and flows much faster in the outer tubes, thereby defeating the efficiency of the inner tubes. In other words the water in the inner tubes flows too lazily, with the result that the efficiency of the complete cooling system is upset. Because of this uneven flow a greater amount of tubing than would otherwise be required is necessitated.

The terminal header fittings constitute the mixing arrangement which has been developed in conjunction with the improved multiple flow cooling system by which the efficiency of the entire system is mantained at a maximum and the rate of flow of the water in the various tubes and headers is constant and uniform. The passages in the headers are split in such a way that the water from an outside tube is diverted to an inside tube. Through this arrangement, the momentum or parabolic action of the water is broken up, and its tendency to crowd the outer passages is overcome. All of the tubes therefore carry an even flow of water, which is very important in estimating their capacity of heat dissipation.

Thus the return or terminal fitting is cored in such a way that the water from an outer tube passes through a cored section over the water from an inner tube and is diverted to the inner tube on the return side. Working from the other end this situation reverses itself.

In order to handle the large amount of circulating water it is absolutely necessary that the

water be carried in two or more tubes in each direction, spreading out and converging at the inlet and outlet fitting. The terminal headers, due to their novel arrangement thoroughly mix the circulating water, thus achieving a substantially equal flow in all tubes which is of utmost importance for efficient operation.

Referring more particularly to Figures 10 to 13 inclusive, eight tubes are shown as against the four of the first form of the device. These eight tubes are arranged in parallel relation. Four of the tubes marked 70 carry the water from the origin and terminal header 71 to the aft header 72 in which the direction of current flow is reversed and the water circulated back to header 71 through the four tubes marked 73.

In this instance the stand pipe 74 rises from the central portion of the origin and termial header 71 and its partition 75 diverts the incoming hot water to the tubes 70 and separates the same from the cooled effluent which is recirculated to the engine water jacket. The cap 76 also has partition 77 forming a continuation of the partition 75. In Figure 12 the arrows show the incoming and outgoing water.

Figure 12 also shows the partition 75a extending outwardly as a prolongation of partitions 75 and 77 into the base fitting 78 which in this instance is or may be a part of the origin and terminal header 71.

It is obvious that various changes and modifications may be made in the details of construction and design of the above specifically described embodiment of this invention without departing from the spirit thereof, such changes and modifications being restricted only by the scope of the following claim.

What is claimed is:

A cooling device comprising four tubes and headers connected to the ends of the tubes, each header comprising a casting cored out to provide rounded passages of approximately equal length, said passages overlapping vertically, a horizontal partition separating the passages, vertical partitions, one vertical partition extending from the top of the casting down to said horizontal partition, another vertical partition extending from the bottom of the casting up to said horizontal partition, tube sockets in the casting, the vertical partitions being in alinement with the intermediate tube sockets and being approximately one-half the cross-sections of the sockets, and other vertical partitions at substantially right angles to the first-named vertical partitions.

GUSTAVE WALTER.

REFERENCES CITED

The following references are of record in the file of this patent:

UNITED STATES PATENTS

Number	Name	Date
395,347	Pratt	Jan. 1, 1889
1,000,310	Ward	Aug 8, 1911
2,258,526	Walter	Oct. 7, 1941
2,260,594	Young	Oct. 28, 1941
2,356,844	Higgins	Aug. 29, 1944

Oct. 7, 1952 T. MAIRS 2,612,858

MARINE ENGINE WATER COOLER

Filed May 17, 1948 2 SHEETS—SHEET 1

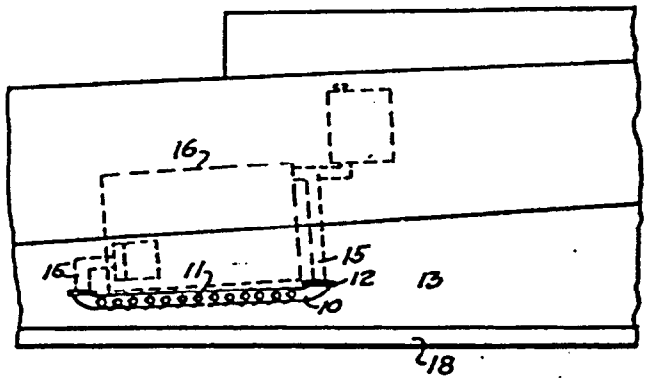

Fig. 1.

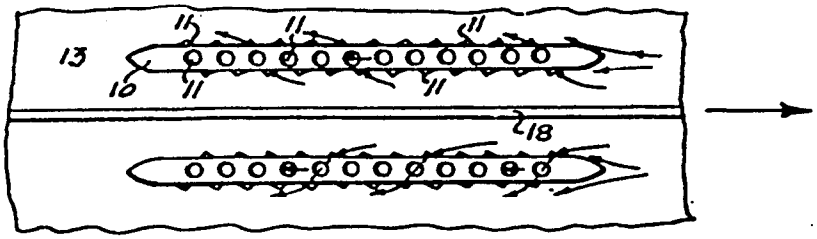

Fig. 2.

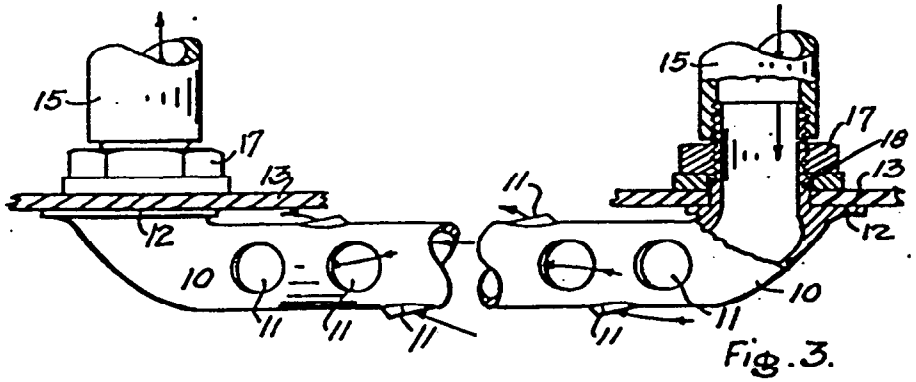

Fig. 3.

INVENTOR.
Thomas Mairs
BY
P. J. Elliott

Oct. 7, 1952 T. MAIRS 2,612,858

MARINE ENGINE WATER COOLER

Filed May 17, 1948 2 SHEETS—SHEET 2

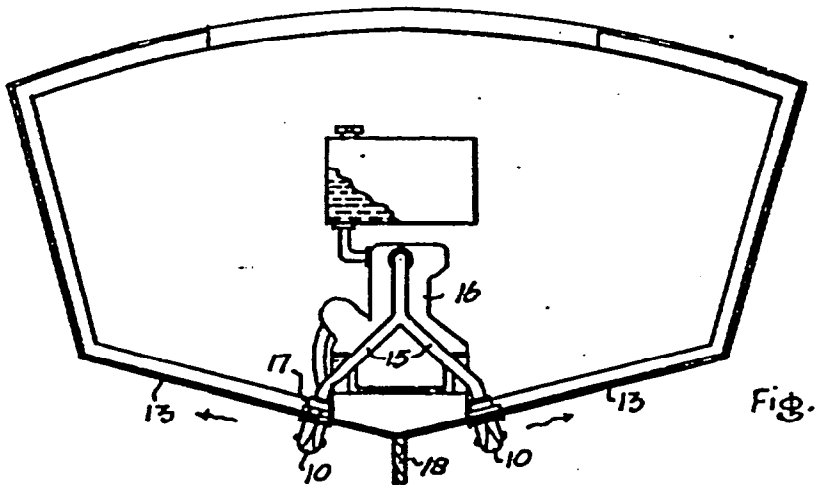

Fig. 4.

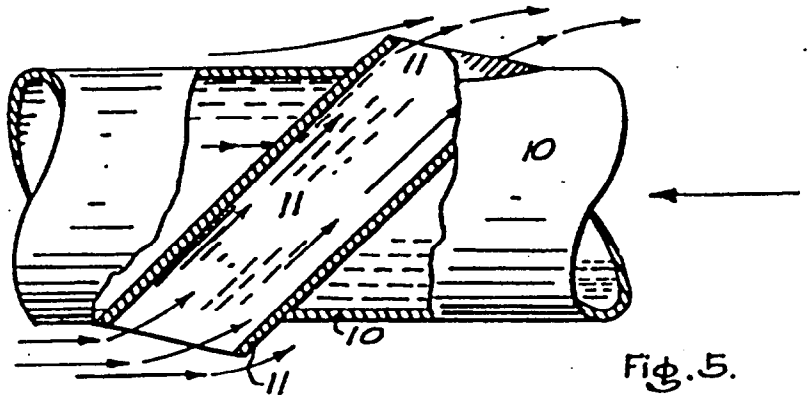

Fig. 5.

INVENTOR
Thomas Mairs
BY
ATTORNEY

Patented Oct. 7, 1952 2,612,858

UNITED STATES PATENT OFFICE

2,612,858

MARINE ENGINE WATER COOLER

Thomas Mairs, Tacoma, Wash.

Application May 17, 1948, Serial No. 27,402

1 Claim. (Cl. 115—0.5)

1

This invention relates to devices for cooling the water or other coolant used for cooling the engine of the internal-combustion type and for other similar purposes, wherein the circulating engine water is conducted through piping immersed in the cold water outside the boat.

The objects of my invention are to provide means for cooling the circulating water which will cause the least resistance to the forward motion of the boat; which, on account of its efficiency, will provide a sufficient cooling effect for a relatively large engine; which secures a quick change of cold water through the device independent of the direction of motion of the boat; which is made in a complete unit and therefore may be installed under the bottom of any new or old boat without the necessity of hiring skilled labor; which is simple and rugged in construction, quick and easy to install, and highly efficient in use.

I attain these and other objects as will readily be perceived by those skilled in the art, by the devices and arrangements illustrated in the accompanying drawings, in which—

Fig. 1 is a side elevation of a part of a motor boat showing one of my devices mounted thereunder; Fig. 2 is a bottom plan view of such a boat, showing it equipped with two of my devices; Fig. 3 is a larger view of parts of my device partly in section; Fig. 4 is a cross-section of a motor boat showing two of my devices installed thereunder; and Fig. 5 is an enlarged view of a typical section of my device, a part being shown in section.

Identical numerals of reference refer to the same parts throughout the several views.

Many devices have been made for the purpose of cooling the circulating engine water through the agency of the relatively cold water in which the boat is floating, but they usually involve many pipe connections and have to be assembled or constructed on the boat bottom, thus calling for the expenditure of much skilled labor, time and money, which exert a large resistance to the motion of the boat through the water, and which are of so low an efficiency that they must be quite large in extent, involving many feet of piping.

It is for the purpose of overcoming the above and other deficiencies in the present practice that I have devised the following described integral structure.

Essentially this device comprises a cast tube 10 of suitable material and of sufficient size to accommodate the easy flow of the engine circu-

2

lating water, or coolant, and passing through and across this tube 10 are a plurality of open-ended tubes 11 of smaller diameter. The axes of these tubes 11 are set at an angle of about 45° with the axis of the tube 10 and may be arranged in a plurality of rows. As seen in Fig. 5, the open ends of the tubes 11 are parallel and are cut off at an angle of about 60° to the axes of the said tubes 11 and are so placed in the holes formed in the tube 10 for their reception, that the aft edges of the forward lying ends and the forward edges of the aft lying ends of the tubes extend a short distance out from the surface of the tube 10 while the opposite edges thereof are flush with the surface of the said tube 10.

The result of this construction is to form, at the forward ends of the said tubes 11 slight scoops which guide and force the relatively moving cold water to pass through the smaller tubes 11, and at the rearward ends of these tubes 11 this construction causes a suction as the boat is moved through the water, thus the cold water is caused to pass through the said smaller tubes 11 very swiftly, thus carrying off the heat from the surrounding circulating water in the tube 10.

The two ends of the tube 10 are turned at right angles towards the boat and are provided with flanges 12 adapted to butt against the boat bottom 13 and having screw-threaded extensions 14, passing through the boat bottom 13, to which suitable piping 15 to and from the cooling system of the marine engine 16. The nuts 17 hold the cooler flanges 12 tightly against the boat bottom 13 and prevent leakage through the holes formed therein.

Since my improved circulating water cooler is of integral construction and can be bought completely constructed and ready for installing on the boat, and is very strong and rugged, the only labor connected with its installation is to make two holes of suitable size and position, through which the extensions 14 will snugly pass into the interior of the boat, apply the nuts 17 thereto, and connect the piping 15 to the extensions 14 and to the engine cooling system.

Normally a single cooling tube 10 is used, but under certain circumstances two such tubes may be used, one on each side of the keel 18, for use either with a single engine, as shown, or with two marine engines.

The above described water coolers are made in right-hand and left-hand form, and are mounted under the boat in such manner that the forward ends of the tubes lie adjacent to the keel 18 of the boat, thus lying in the stream of water

forced laterally by the shape of the boat bottom, as indicated by the arrows in Figs. 2 and 4.

The form and shape of the several parts of my improved water cooler are such as to exert the least resistance to the motion of the boat in the water.

The form of the cooling tubes 11 are such as to be substantially equally efficient whether the boat is moving forward or backward, the only difference being that the water may not pass through the tubes 11 at as high a speed, in backing, due to the fact that it is moving towards, rather than away from, the keel.

It is, of course, to be understood that changes may be made in the construction of my improved water cooler as above shown and described, without departing from the spirit of my invention as outlined in the appended claim.

Having described my invention, what I claim and desire to secure by Letters Patent, is:

In a boat having a keel and a water-cooled engine provided with water intake and outlet ports; a closed cooling system for said water, comprising a tube adapted to be attached to the exterior of the boat below its water line adjacent the keel and secured at its opposite ends to said intake and outlet ports to form a closed cooling water circuit, and a plurality of cooling pipes extending transversely through said tube at an oblique angle to the longitudinal axis of the latter, the cooling pipes projecting from the tube to form water scoops at their leading ends whereby the water surrounding the boat is driven through said pipes as the boat is propelled, the scoop ends of the cooling pipes facing the boat keel whereby to receive the water projected laterally outward from said keel as the boat is propelled.

THOMAS MAIRS.

REFERENCES CITED

The following references are of record in the file of this patent:

UNITED STATES PATENTS

Number	Name	Date
101,923	Rowe	Apr. 12, 1870
968,385	Morgan	Aug. 23, 1910
1,266,455	Gordon	May 14, 1918
2,258,526	Walter	Oct. 7, 1941
2,382,218	Fernstrum	Aug. 14, 1945

FOREIGN PATENTS

Number	Country	Date
106,727	Great Britain	June 7, 1917

March 28, 1961 P. H. R. WALDRON ET AL 2,976,834

MARINE HEAT EXCHANGER

Filed Dec. 4, 1958

Fig. 1

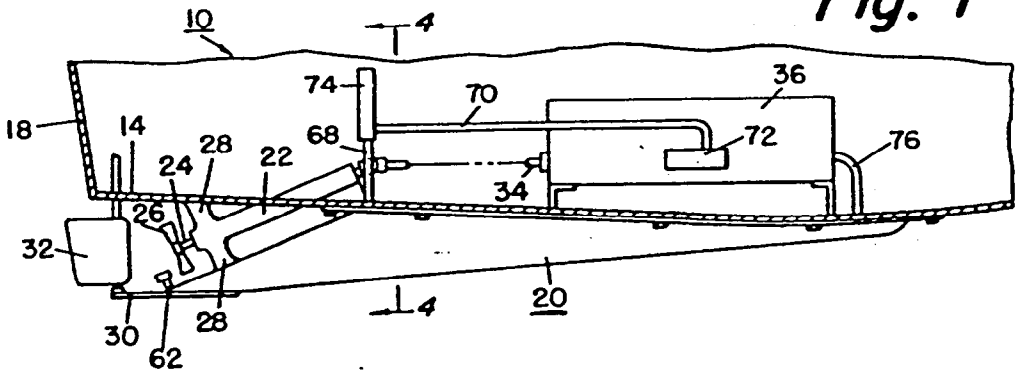

Fig. 2

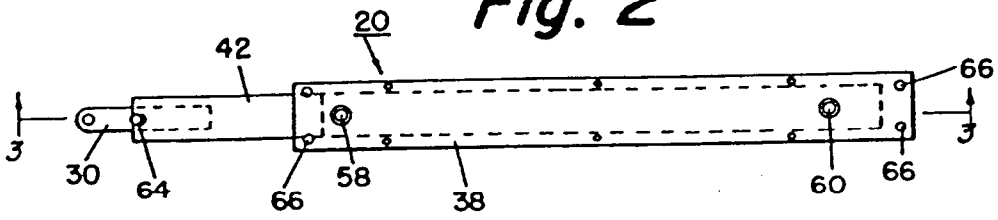

Fig. 3

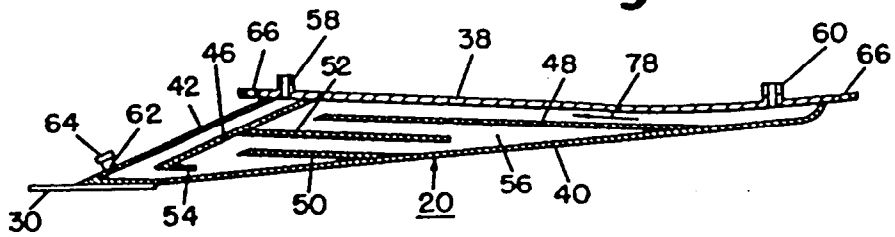

Fig. 4

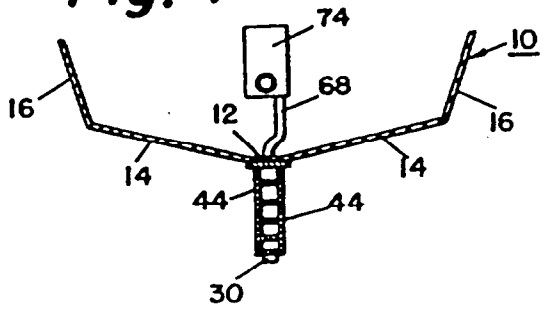

INVENTORS
PAUL H. R. WALDRON
SAM SCHLEIFER

BY Arthur H. Seidel

ATTORNEY

United States Patent Office 2,976,834 Patented Mar. 28, 1961

2,976,834

MARINE HEAT EXCHANGER

Paul H. R. Waldron, % Mitchell College, and Sam Schleifer, 37 Fowler Court, both of New London, Conn.

Filed Dec. 4, 1958, Ser. No. 778,226

3 Claims. (Cl. 115—5)

This invention relates to a marine heat exchanger, and more particularly to a heat exchanger for use in cooling the engine of an inboard motor vessel. Even more particularly, the present invention relates to a heat exchanger for inboard motor vessels which is a part of the design of the hull of the vessel.

For cooling the engines of inboard motor vessel, particularly the smaller vessels, it is the common practice to use the water which surrounds the vessel. The raw cool water is pumped through the engine and the heated water returned to the surrounding medium. Where the coolant is sea water, the salt in the water has a corrosive reaction with the engine which rapidly reduces the life of the engine. A survey by the boating industry found that engines cooled by salt water deteriorate at least five times as rapidly as engines cooled by fresh water. Also, the salt water attacks the water pump, causing failure of the pump at most unpredictable times. Such failure is a major hazard in boating.

Another cooling system which has been used in an attempt to overcome the hazards of directly using the surrounding water, uses an inboard heat exchanger. A closed system pumps fresh water through the heat exchanger and the engine. A second system pumps the surrounding water through the heat exchanger to cool the fresh water. However, this system is bulky in that it requires an inboard heat exchanger and two separate pumping systems. Also, the heat exchanger and the salt water pump are subject to corrosion by the salt water.

It is an object of the present invention to provide an improved heat exchanger for the engine of an inboard motor vessel.

It is another object of the present invention to provide a heat exchanger for inboard motor vessels which is directly cooled by the water surrounding the vessel.

It is still another object of the present invention to provide a heat exchanger for inboard motor vessels which forms a part of the design of the hull of the vessel.

It is a further object of the present invention to provide a heat exchanger for inboard motor vessels which is relatively small and which rapidly cools the coolant for the engine.

It is still a further object of the present invention to provide a heat exchanger for inboard motor vessels which does not add any drag or any appreciable additional weight to the vessel.

Other objects will appear hereinafter.

For the purpose of illustrating the invention there is shown in the drawings a form which is presently preferred; it being understood, however, that this invention is not limited to the precise arrangements and instrumentalities shown.

Figure 1 is a sectional view of the hull of a vessel which includes the heat exchanger of the present invention.

Figure 2 is a top elevational view of the heat exchanger of the present invention.

Figure 3 is a sectional view taken along line 3—3 of Figure 2.

Figure 4 is a sectional view taken along line 4—4 of Figure 1.

Referring initially to Figures 1 and 4 of the drawing, the hull of the vessel is generaly designated as 10. Hull 10 comprises a keel 12 having a bottom 14 extending upwardly and outwardly from each side of the keel 12. Sides 16 extend upwardly from the bottom 14. A transom 18 extends upwardly from the aftermost end of bottom 14, and extends between the sides 16. The heat exchanger 20 of the present invention extends downwardly from the keel 12.

A stuffing box 22 for the shaft 24 of the propeller 26 extends rearwardly through the keel 12 or bottom 14 of the hull 10. The outer end of stuffing box 22 is supported between the heat exchanger 20 and the keel 12 or bottom 14 by supporting posts 28. A skeg 30 extends rearwardly from the heat exchanger 20, and a rudder 32 is pivotably connected between the end of skeg 30 and the keel 12 or bottom 14 of the hull 10. Propeller shaft 24 is connected to the drive shaft 34 of the engine 36. For simplicity, engine 36 is shown mounted on the bottom 14 of the hull 10. However, the engine 36 may be mounted on a deck of the vessel or in any suitable place in the vessel.

Referring to Figures 3 and 4, the heat exchanger 20 of the present invention comprises a substantially rectangular top plate 38 which is long and narrow. The configuration of top plate 38 conforms to the configuration of the keel 12. A substantially rectangular bottom plate 40 is secured at one end to the top plate 38 adjacent the forward end of the top plate 38. Bottom plate 40 extends longitudinally along and downwardly away from the top plate 38. Bottom plate 40 extends longitudinally beyond the rear end of top plate 38. A substantially rectangular end plate 42 connects the rearmost end of bottom plate 40 to the top plate 38 adjacent the rearmost end of the top plate 38. Side plates 44 extend between the top plate 38 and the bottom plate 40 to completely enclose the heat exchanger 20.

A baffle plate 46 extends between the side plates 44 from the top plate 38 to a point spaced from the bottom plate 40. Baffle plate 46 is substantially parallel to and spaced from end plate 42. A pair of parallel, longitudinally extending baffle plates 48 and 50 extend between the side plates 44 from the bottom plate 40 to points spaced from the baffle plate 46. Another pair of parallel, longitudinally extending baffle plates 52 and 54 extend between the side plates 44 from the baffle plate 46 to points spaced from bottom plate 40. Baffle plate 52 extends between baffle plates 48 and 50, and baffle plate 54 is below baffle plate 50. Thus the baffle plates form a continuous labyrinth passage 56 which extends longitudinally back and forth across the heat exchanger 20 and then upwardly along the rearmost end of the heat exchanger 20. Top plate 38 has a port 58 extending through its rear end into the space between the end plate 42 and the baffle plate 46. A second port 60 extends through the forward end of top plate 38 into the space between the baffle plate 48 and the top plate 38. A drain pipe 62 extends through the bottom end of end wall 42 into the labyrinth passage 56, and a cap 64 fits tightly on the drain pipe 62.

Heat exchanger 20 is fabricated entirely of metal to provide for good conduction of heat. The top plate 38 of heat exchanger 20 is secured to the bottom of keel 12 by bolts or the like which extend through holes 66 in the ends of the top plate 38 which project beyond the end plate 42 and the bottom plate 40. However, if the vessel is originally constructed with the heat exchanger 20 of the present invention, the heat exchanger 20 may be con-

structed as a part of the keel 12 with the keel 12 acting the top plate 38.

As shown in Figure 1, the port 58 of the heat exchanger 20 is connected by pipes 68 and 70 to a water pump 72. A fill pipe 74 is connected between pipe 68 and pipe 70. Fill pipe 74 is larger in diameter than the pipes 68 and 70 so that the fill pipe 74 will serve as an expansion chamber. Pump 72 is connected to the inlet end of the cooling chamber of engine 36. A pipe 76 connects the outlet end of the cooling chamber of engine 36 to the port 60 of heat exchanger 20. Thus the heat exchanger 20, pipes 68, 70, and 76, and engine 36 form a closed system for circulating fresh cooling water through the engine 36 and the heat exchanger 20.

The operation of the cooling system which incorporates the heat exchanger 20 of the present invention is as follows:

The system is filled with fresh water through fill pipe 74. Pump 72 draws cool water from the heat exchanger 20 through port 58, pipes 68 and 70, and forces the cool fresh water through the cooling system of the engine 36. The warm water from the engine 36 is forced through the pipe 76 back into the heat exchanger 20 through port 60.

In the heat exchanger 20, the warm water from the engine 36 enters the foremost end, of the heat exchanger 20 through the port 60. The water then flows longitudinally through the uppermost portion of the labyrinth passage 56 between top plate 38 and baffle 48 in the direction of arrow 78. The water flows through the labyrinth passage 56 longitudinally back and forth across the heat exchanger 20 and downwardly toward the bottom rearmost end of the heat exchanger 20. As the water passes through the labyrinth passage 56, the water is cooled by the induction of heat from the water through the side plates 44 of the heat exchanger 20 to the cooler water surrounding the heat exchanger 20. The cool water from the bottom rearmost corner of the heat exchanger 20 is drawn up between end plate 42 and baffle plate 46 to the port 58, and then back to the engine 36.

In a vessel containing both warm and cool water, the warm water would normally rise to the top of the vessel and remain on top. However, in the heat exchanger 20 of the present invention, the warm water entering the top of the heat exchanger 20 is forced longitudinally back and forth and downwardly through the labyrinth passage 56. Thus, all the water is brought into direct contact with substantially the entire surfaces of the side walls 44 of the heat exchanger 20. This provides for the rapid cooling of the water in a heat exchanger which is of relatively small volume. Also, the baffles of the heat exchanger 20 of the present invention divide the cool water leaving the heat exchanger 20 from the warm water entering the heat exchanger 20. This prevents heating of the cooled water by convection of heat from the warm water.

The tapered design of the heat exchanger 20 of the present invention conforms to the design of the hull 10 of the vessel. Thus, the heat exchanger 20 does not add any drag to the vessel, yet extends into the water surrounding the vessel for proper cooling of the heat exchanger 20. Also, since the heat exchanger 20 of the present invention is relatively small in volume, it does not add any appreciable additional weight to the vessel.

The present invention may be embodied in other specific forms without departing from the spirit or essential attributes thereof and, accordingly, reference should be made to the appended claims, rather than to the foregoing specification as indicating the scope of the invention.

We claim:

1. A marine heat exchanger comprising a substantially rectangular, metal top plate, a rectangular metal bottom plate secured at its forward end to the forward end of said top plate and extending longitudinally beneath and downwardly away from said top plate, a metal end plate connected between the rear end of said bottom plate and the rear end of said top plate, a pair of parallel side plates connected between said top plate and said bottom plate, said top plate, bottom plate, end plate, and side plates forming an enclosed chamber, baffles means extending between said side plates and forming a labyrinth passage which extends longitudinally back and forth through the chamber from the forward end of said top plate to the rear end of said bottom plate so that a liquid flowing through said passage must flow adjacent to said bottom plate at spaced points along said bottom plate, and a pair of longitudinal spaced ports through said top plate, one of said ports opening into one end of said passage and the other port opening into the other end of said passage.

2. A marine heat exchanger comprising a substantially rectangular metal top plate, a rectangular metal bottom plate secured at its forward end to the forward end of said top plate and extending longitudinally beneath and downwardly away from said top plate, a metal end plate connected between the rear end of said bottom plate and the rear end of said top plate, a pair of parallel side plates connected between said top plate and said bottom plate, said top plate, bottom plate, end plate, and side plates forming an enclosed chamber, a first baffle plate extending between said side plates and downwardly from said top plate to just above said bottom plate, said first baffle plate being parallel to and adjacent said end plate but spaced from said end plate, a second baffle plate extending between said side plates and longitudinally from said bottom plate to a point spaced from said first baffle plate, a third baffle plate extending between said side plates and longitudinally from said first baffle plate to a point spaced from said bottom plate, said third baffle plate being substantially parallel to and spaced below said second baffle plate, said baffle plates forming a labyrinth passage through said chamber, a port through the rear end of said top plate opening into the space between said end plate and the first baffle plate, and a port through the forward end of said top plate opening into the space between said top plate and the second baffle plate.

3. A heat exchanger in accordance with claim 2 including a fourth baffle plate below said third baffle plate extending between the side plates and longitudinally from said bottom plate to a point spaced from said first baffle plate, and a fifth baffle plate below said fourth baffle plate extending between said side plates and longitudinally from said first baffle plate to a point spaced from said bottom plate.

References Cited in the file of this patent

UNITED STATES PATENTS

2,386,803	Jutte	Oct. 16, 1945
2,387,700	Cribb	Oct. 23, 1945
2,859,634	Walter	Nov. 11, 1958

FOREIGN PATENTS

26,788	Great Britain	Nov. 18, 1909
485,095	Italy	Sept. 29, 1953

April 13, 1965 G. WALTER 3,177,936

FLUTED HEAT EXCHANGE TUBE WITH INTERNAL HELICAL BAFFLE

Filed June 5, 1963 2 Sheets-Sheet 1

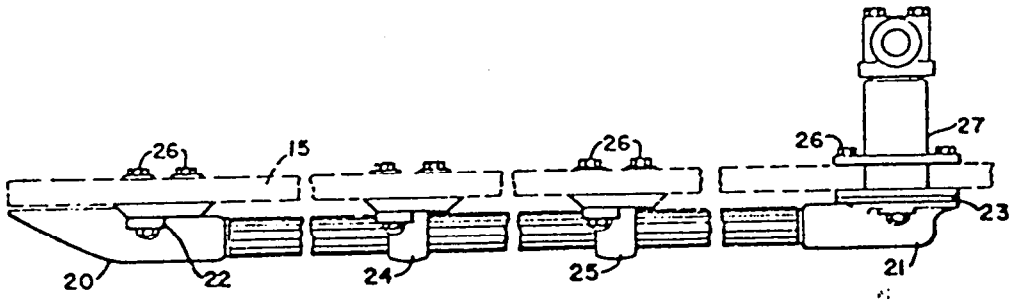

FIG. 1.

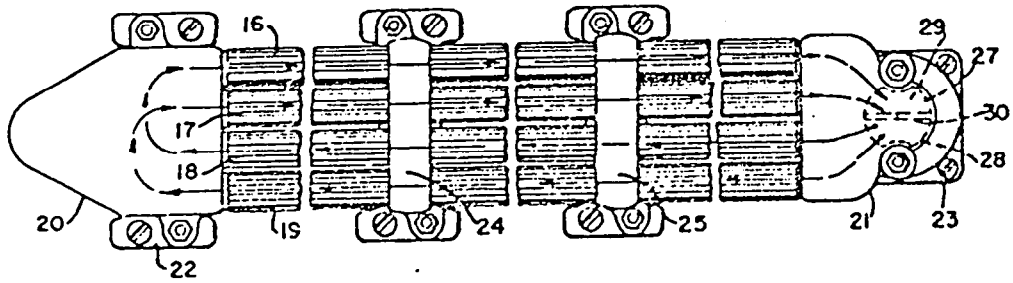

FIG. 2.

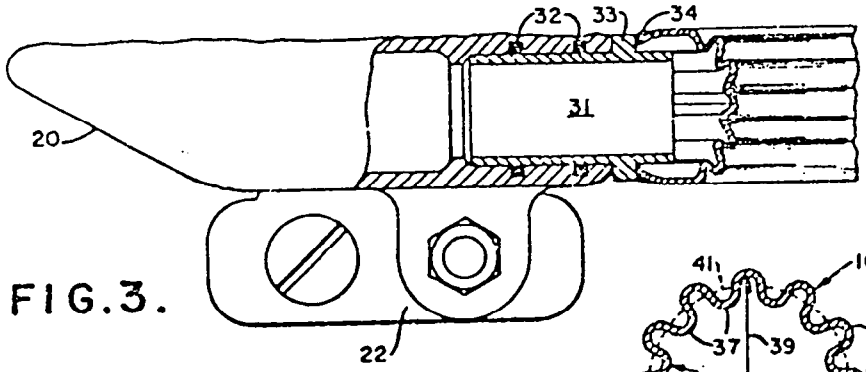

FIG. 3.

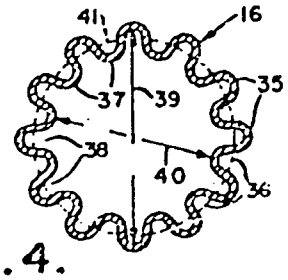

FIG. 4.

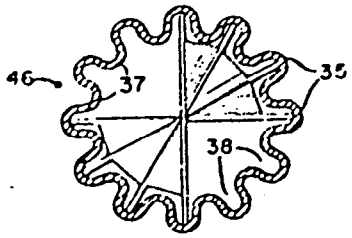

FIG. 5.

INVENTOR
Gustave Walter

BY Mawhinney & Mawhinney
ATTORNEYS

April 13, 1965 G. WALTER 3,177,936

FLUTED HEAT EXCHANGE TUBE WITH INTERNAL HELICAL BAFFLE

Filed June 5, 1963 2 Sheets-Sheet 2

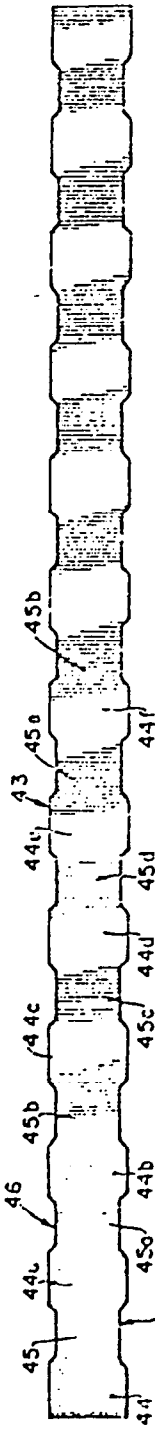

FIG. 6.

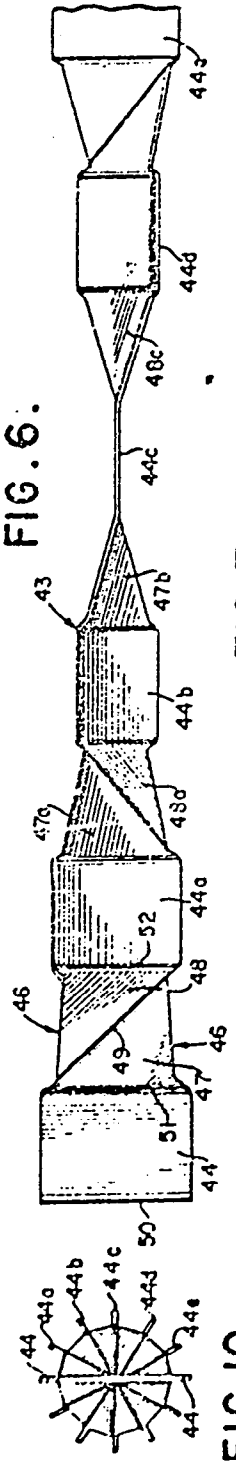

FIG. 7.

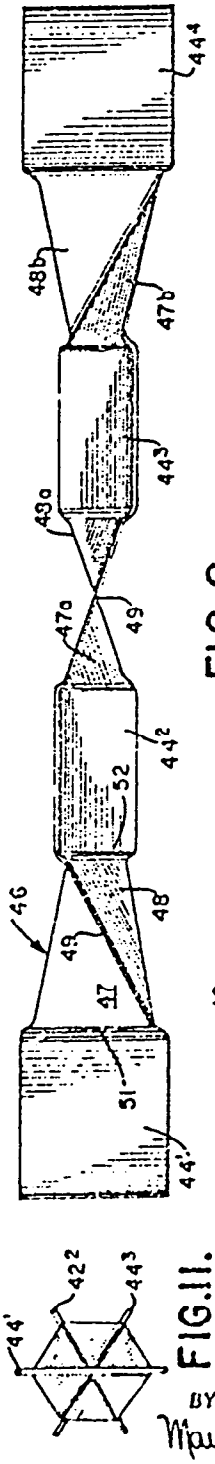

FIG. 8.

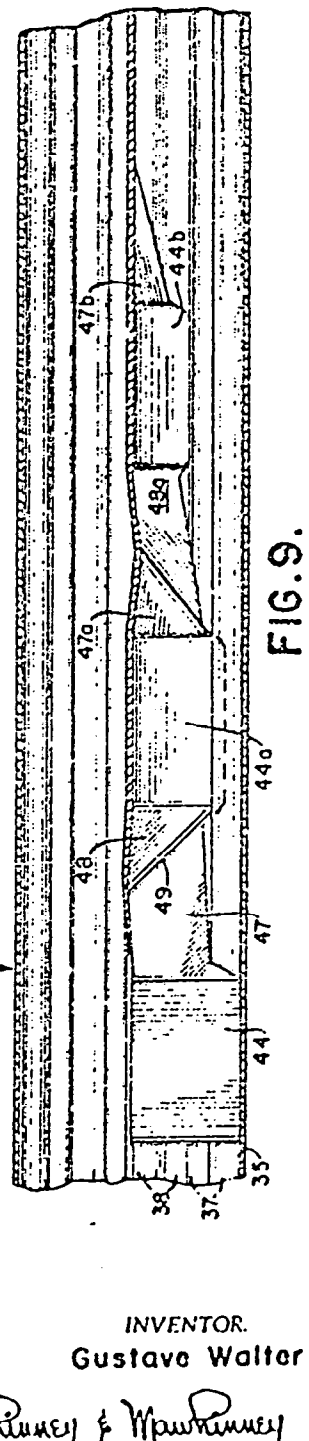

FIG. 9.

FIG. 10.

FIG. 11.

INVENTOR.
Gustave Walter
BY
Mawhinney & Mawhinney
ATTORNEYS

United States Patent Office

3,177,936
Patented Apr. 13, 1965

3,177,936
FLUTED HEAT EXCHANGE TUBE WITH INTERNAL HELICAL BAFFLE

Gustave Walter, 15 Thorne St., Jersey City, N.J.

Filed June 5, 1963, Ser. No. 285,733
1 Claim. (Cl. 165—179)

The present invention relates to marine heat exchanger for engine coolant, and has for an object, among other objects and purposes, to provide a novel heat exchange unit for use in such engine cooling devices and systems as disclosed in my prior Patents 2,258,526, granted October 7, 1941, and 2,415,154, granted February 4, 1947.

Those prior patents provided keel cooling systems for marine engines in which heat exchangers were affixed beneath the hull of a boat involving closed fresh water cooling systems to protect the marine engines from the contamination and corrosion of raw water.

With the development of more powerful engines and fast power boats, the length of cooling tubes necessary to provide sufficient heat exchange for these engines, when installed in fast but comparatively short boats, is becoming prohibitive to fit available lengths beneath the boats, which reduced lengths also have raised problems of fastening conventional long cooling tubes to the keel or other portions of the bottoms of the boats.

In order to increase the rate of heat exchange experiments have been made with commercially available finned cooling tubes with the purpose to decrease the lengths of the cooling tubes while at the same time increasing the heat exchange capacity of the tubing.

However, while such finned cooling tubes increase the outside surface area, the inside surfaces remain plain and round or cylindrical so that as a whole such tubes have been found insufficient to provide sufficiently increased external surface cooling area to the fresh water inside the tubes. Furthermore, this available tubing has fins formed in a thread-like fashion which, when fastened to the bottom of the hull, are at right angles to the flow of the external cooling water over the tubes with the result that the flow over the external surfaces of the tubes is not desirably efficient since some of the particles of the water surrounding the fins are carried with the tubing at a reduced surface friction which diminishes the heat exchange.

It is the object and purpose of the invention to overcome the above difficulties by the development of a new form of tubing which admits of shorter length and smaller diameter while developing greater heat exchange capacity.

It is another object of the invention to provide fluted tubing in which the flutes on the tubing run lengthwise relatively to the movement of the tubes with the boat through the sea or other cooling water, thereby resulting in an efficient flow of this cooling water over the surface of the tubing.

A further object of the invention is to provide tubing of the smaller diameter referred to so that the same neatly fits to the bottom of the boat offering little drag or resistance to the speed of the boat.

A still further object of the invention is to provide in such a tubing a baffle or mixing device so constructed and arranged as to agitate the engine coolant water while flowing through the tubes in a manner to cause all of the engine coolant water flowing through the tubes to move toward and from the inner surfaces of the cooling tubes for good heat exchange.

A still further object of the invention is to provide a novel form of baffle or mixing device that partitions the tubes into at least two stream passages of a tortuous or serpentine form for increasing the paths of the coolant water longitudinally from end-to-end of the tubes, which paths are in effect therefore longer than the lengths of such tubes.

With the foregoing and other objects in view, the invention will be more fully described hereinafter, and will be more particularly pointed out in the claim appended hereto.

In the drawings, wherein like symbols refer to like or corresponding parts throughout the several views:

FIGURE 1 is a side elevational view of an improved marine heat exchanger for engine coolants constructed in accordance with the present invention and shown as applied to a boat hull or keel indicated in broken lines.

FIGURE 2 is a bottom plan view of the same.

FIGURE 3 is an enlarged sectional view through one of the headers and one of the novel tubes showing a preferred form of tube mounting.

FIGURE 4 is a cross-sectional view taken through a preferred form of tubing.

FIGURE 5 is a view similar to FIGURE 4, showing a preferred form of baffle or mixing device installed in the tube.

FIGURE 6 is a side elevational view of a blank from which a form of baffle or mixing device may be constructed in any desired length to accommodate the selected length of tubing.

FIGURE 7 is a partial side elevational view of a form of baffle or mixing device which may be constructed from such blank.

FIGURE 8 is a side elevational view of another form of baffle or mixing device in a completed stage.

FIGURE 9 is a fragmentary longitudinal sectional view of a tube taken on an enlarged scale and illustrating the application of the baffle or mixing device to the internal structure of the tube.

FIGURE 10 is an end elevational view of the baffle according to FIGURE 7, taken from the left end thereof.

FIGURE 11 is an end elevational view of the form of baffle shown in FIGURE 8, taken from the left end thereof.

Referring more particularly to the drawings, 15 in FIGURE 1 designates the hull or keel of a boat, and 16, 17, 18 and 19 designate a cooling unit of four heat exchange tubes constructed in accordance with the preferred form of the invention.

These tubes are fitted at their opposite ends into terminal header fittings 20 and 21 which are affixed to the boat by end supports 22 and 23. Intermediate clamps 24 and 25 embrace the tube assembly and are also connected by bolts 26 or other fastenings beneath the keel or hull 15 of the boat so that the tubing and headers are exposed externally to the sea or other water.

A stem or stand pipe rises through the hull 15 from one of the headers 21. In this stand pipe are chambers 28 and 29 separated by a partition 30. One of these chambers, for instance the chamber 28, receives hot water from the engine water jacket, which hot water is circulated through certain of the tubes from the header 21 to the header 20 and thereupon in a return flow through other tubes back to the header 21 and to the opposite chamber 29 for recirculation of the cooled water back to the engine, all in accordance with the arrow indications in FIGURE 2.

Referring more particularly to FIGURE 3, a preferred form of mounting the tubes 16, 17, 18 and 19 to the headers 20 and 21 is by the use of tube adapters 31 of a cylindrical form open at both ends and fitted with neoprene or other rings 32 into the headers. These tube adapters 31 are provided with outstanding flanges 33 adapted to abut against the ends of the headers at one side and to receive at the other side the abutting ends of the tubing which is affixed to the adapters and/or to the flanges 33 by silver solder 34 or otherwise.

Referring more particularly to FIGURE 4 which shows a cross-section on an enlarged scale through one of the tubes according to a preferred form of the invention, 35 designates longitudinally running circumferentially spaced external projections of the tube wall separated by external spaced grooves 36 opening outwardly.

The tube wall is so fashioned as to provide longitudinally running circumferentially spaced internal projections 37 separated by internal grooves 38 which also run parallel with the axis of the tube. The internal groove diameter is indicated at 39 and the internal projection diameter at 40, from which it will be seen that the internal grooves 38 and the internal projections 37 are arranged in diametric pairs, which pairs are angularly displaced around the circumference of the tube.

The broken circular line 41 indicates the mean circumference of the tube, the external projections 35 and the internal projections 37 extending respectively outside and inside this circumferential line 41 in a configuration resembling a sine curve resulting in a wave-like effect which is probably best described as a fluted tube wall.

Although this preferred form of tube may be of any desired material and produced in any suitable manner, it is recommended that the tubes be seamless, thin-walled, for example of .025 inch thickness of Monel stainless corrosion resistant material. Such material will discourage barnacles and is of great strength. Initially a plain walled cylindrical tube of approximately 1½ inches outside diameter is selected and shaped or formed over a mandrel having an external wave-like pattern by rollers which reduce the diameter to approximately 1⅛ inches outside diameter.

It will be noted that the flutes of the tubing run lengthwise or axially in line to the flow of the cooling water which thus results in an efficient flow of this cooling water over the surface of such tubes.

The form of the tube also cooperates in a novel manner with the mixing baffle 43, shown more particularly in FIGURES 6 to 11.

The baffle may be made from stock stamped out as indicated in FIGURE 6 and cut off into desired lengths to accommodate the selected length of the tubing into which it is to be inserted. This stock strip comprises generally an axial succession of diametric plates in any suitable number designated 44, 44ᵃ, 44ᵇ, 44ᶜ, 44ᵈ, 44ᵉ, 44ᶠ, et cetera, separated by an axial succession of twist joint strips 45, 45ᵃ, 45ᵇ, 45ᶜ, 45ᵈ, 45ᵉ, 45ᶠ, et cetera.

The plates 44, 44ᵃ, et cetera, are flat throughout their length and breadth or height in order to slidably fit into the diametric paths of internal grooves 38 of the tube, the plates being of a width or height approximately that of the length of the diametric line 39 illustrated in FIGURE 4 with suitable tolerance to permit of the plate sliding freely in the diametric pairs of grooves 38 into which it is initially slidably fitted. In this condition the plate is flanked at both diametric opposed edges by internal projections 37 which therefore stabilize the plates against the reaction of the cooling water flowing through the tubes and in general hold the plates to alignment.

As shown in FIGURES 7 and 10, successive plates 44, 44ᵃ, 44ᵇ, 44ᶜ, 44ᵈ and 44ᵉ are displaced angularly from one another about the axis of the tube in the order stated by the angles subtended by the various diametric pairs of internal grooves 38 of the tube. Thus these diametric plates 44, 44ᵃ, et cetera, are progressively stepped angularly around the circumference of the tube, the same being connected together by the twist strips 45, 45ᵃ, 45ᵇ, et cetera, which twist strips are of lesser wall width or have cut away portions 46 to clear the internal projections 37 of the tube at cross-over points to permit the twist strips 45, 45ᵃ, et cetera, to connect adjacent diametric plates 44, 44ᵃ, et cetera, at their rear and forward edges 51 and 52 respectively.

While the twist strips may be fashioned in any suitable form so as to join such rear and front edges 51 and 52, of adjacent angularly disposed diametric plates 44, 44ᵃ, et cetera, it is preferred that these twist strips be comprised of leading sections 47, 47ᵃ, 47ᵇ, et cetera, and trailing sections 48, 48ᵃ, 48ᵇ, 48ᶜ, et cetera, in which the sections 47 et cetera and 48 et cetera are approximately triangular in form, being joined together by hypotenuse lines of division 49. The hypotenuse lines 49 are common to the pairs of triangles 47, 48 and 47ᵃ, 48ᵃ, et cetera, so that these triangular sections are in the form of mutual triangles.

These two triangular sections between each pair of diametric plates slope from the hypotenuse line 49 in substantially opposite directions to the edges 51 and 52 of the diametric plates so that the twist strips not only connect adjacent diametric plates which partake of no curvature but they also present to the streams of coolant water in the tube on opposite sides of the mixing baffle offset inclined surfaces diverting and directing the coolant water from the core throughout all strata to and against the internal fluted walls of the tubes thereby bringing all portions of the internally circulating coolant into circulating contact with such walls at which maximum cooling effect takes place.

From FIGURE 10 it appears that six of the diametric plates suffice to comprehend the entire 360 degrees of the circle where twelve pairs of internal grooves 38 are embodied in the tube wall.

In FIGURE 11 three diametric plates 44¹, 44² and 44³ suffice where the diametric plates are successively displaced angularly from one another through angles defined by every second diametric pair of internal grooves 38.

In FIGURE 7 the numeral 50 indicates the free edge of the diametric plate 44, first or last in the order of succession.

In the use of the device the tubes, fabricated as indicated or otherwise, are mounted between the headers and the heat exchanger fixed in place on a boat, being connected to the water cooling system of the engine in a circulation system.

The mixing baffles are of course inserted in the fluted tubes before the latter are mounted in the headers, or at least before the tubes are mounted in one of the headers. Such baffles are introduced into the open ends of the tubes by axial sliding motion in which the leading diametric plate is fitted into selected diametric pairs of internal grooves 38. The baffle is thereupon moved axially inward with the reduced diameter following twist strip entering the tube unimpeded by the internal projections 37 so that the next diametric plate will be correctly alined with the next diametric pair of internal grooves 38, or the next diametric pair of such internal grooves 38 as may be selected to receive the next diametric plate dependent upon the amount of angular twist given the intermediate twist strip, thereupon the lateral edges of this next diametric plate are entered into the diametric pair of internal grooves 38 presented thereto, it being understood that the relative angular positioning of the diametric plates will be such that each successive plate will accurately fit and easily slide in its designated diametric pair of grooves 38 with intermediate twist strips freely clearing the internal projections 37 at cross-over points and between adjacent diametric pairs of internal grooves 38.

With the baffles in place and the tubes connected to both headers, the device is ready to receive streams of water in each tube separated by its baffle with the baffles imposing on the two streams tortuous or serpentine patterns of flow both in the same rotative direction, that is, clockwise or counterclockwise dependent upon whether viewed from one or the other end of the tube.

The heat exchanger is thus reduced in over-all dimensions, the tubes admit of closer grouping and of shorter length while maintaining adequate heat exchange. With the device the pressure drop is less with more heat ex-

change. The tubing can be reduced, for instance from a length of ten inches to a length of six inches.

The mixing baffle may also be of Monel or other metal.

The twist strips impart the swirl pattern to the two streams on opposite sides of the baffle or partition, while the diametric plates support the twist strips and stabilize such strips in position against the reaction of the water currents. The twist strips may also receive some support and orientation at cross-over points from the internal projections with which they may be in contacting relation.

With reference to FIGURE 8 in comparison with FIGURE 11, it will be noted from FIGURE 11 that the length of the mixing baffle will extend from diametric plate 44^1 to the third plate in order 44^3; although FIGURE 8 shows an additional twist strip 47^b, 48^b and an additional diametric plate 44^4. These last two elements have been added in FIGURE 8 to show that where the tube is longer than from 44^1 to 44^3 the sequence may begin all over with a twist strip 47^b, 48^b leading to the diametric plate 44^4 which corresponds in position and orientation with the initial diametric plate 44^1. The series of course may be added to, as indicated in FIGURE 6, any length desired.

The unit length 44^1 to 44^3 is much shorter in FIGURE 8 than the unit length 44 to 44^2 in FIGURE 7 due to the fact that the twist strips in FIGURE 8 go through a greater angle of turning because the plates are stepped through angles corresponding to two of the internal grooves 38 of the tube; whereas in FIGURES 7 and 10 the twist strips are turned through the smaller angles between adjacent internal grooves 38.

FIGURE 9 corresponds to FIGURE 7 except that the scale is larger and FIGURE 9 is fragmentary.

The main purpose of my invention is to reduce the length and bulkiness of cooling tubes in an outboard marine engine cooling system. It is of utmost importance to obtain a simple and efficient system as unobtrusive as possible. The average modern motorboat, particularly the pleasure cruiser, is shorter and faster than its predecessor; its engine or engines are more powerful, thus, in order to fresh water cool this engine or engines, the cooling tubes of the outboard cooling system must be more efficient to fit in a shorter space on the bottom of the boat hull and, at the same time, small enough in diameter to present minimum drag to the speed of the vessel.

Therefore, by folding or fluting, a 1½ inch diameter tube having a surface area of 4.71 square inches for every inch of length, its diameter can be reduced to 1⅛ inches without losing any cooling area, whereas the plain 1⅛ inch diameter tubing has only 3.53 square inches area per inch of length or approximately 75% of the same diameter folded or fluted tube. A marine engine requiring twenty feet of 1⅛ inch cooling tubes for proper heat exchange can thus be effectively cooled with fifteen feet of the same diameter folded or fluted tube. By folding or fluting a 1½ inch diameter tube, as above mentioned, to 1⅛ inch diameter, the cross-sectional area of this fluted tube is then approximately the same as that of the 1⅛ inch diameter plain tube. However, since the length of this folded or fluted tube can be reduced by 25%, namely, from twenty to fifteen feet, the resistance to the flow of the water through this tubing is then also reduced. For instance, to circulate a large amount of cooling water through the engine jackets, then through the keel cooler, a low pressure centrifugal circulating pump is best suited for this purpose. However, such a pump will cavitate an increasing amount of water as the resistance to the flow of water increases and volume of circulation diminishes. Assuming that the cross-sectional area of the cooling tubes does not restrict the volume of circulation, then the length of cooling tubes is of utmost importance.

A 25% reduction in the length of the cooling tubes will substantially decrease the resistance to the flow of the cooling water through the cooling system and engine water jackets, resulting in a higher volume of cooling water circulation and additional cooling efficiency.

Although I have disclosed herein the best forms of the invention known to me at this time, I reserve the right to all such modifications and changes as may come within the scope of the following claim.

What is claimed is:

A heat exchange unit comprising
(*a*) a tube having
(*b*) a fluted wall with
(*c*) axially running circumferentially spaced external projections forming therebetween
(*d*) external spaced grooves opening outwardly and
(*e*) axially running circumferentially spaced internal projections forming therebetween
(*f*) internal spaced grooves opening inwardly,
(*g*) said external and internal projections being angularly displaced from one another,
(*h*) said external and internal grooves being also angularly displaced from one another,
(*i*) said internal grooves being relatively arranged in diametric pairs,
(*j*) a mixing baffle dividing the tube internally and longitudinally comprising
(*k*) an axial succession of diametric plates having side edge portions received in diametric pairs of the internal grooves and held by adjacent internal projections against angular shifting movements,
(*l*) said diametric pairs relatively displaced about the axis of the tube through successively greater angles, and
(*m*) twist joint strips joining adjacent plates,
(*n*) said strips being of reduced diameter compared to the plates to snugly clear the internal projections at cross-over areas,
(*o*) said strips comprising
(*p*) leading and trailing triangular sections bent in relatively opposite directions along hypotenuse lines,
(*q*) said leading sections connected with the rear edges of the plates and sloped from the planes of the plates laterally of said planes,
(*r*) said trailing sections sloped from the hypotenuse lines to the forward edges of the next successive plates.

References Cited by the Examiner

UNITED STATES PATENTS

2,079,144	5/37	Appa	165—179
2,258,526	10/41	Walter	165—44
2,847,953	8/58	Ernest	138—42
2,960,114	11/60	Hinde	138—38

References Cited by the Applicant

UNITED STATES PATENTS

493,376	3/93	Eaves.
2,864,405	12/58	Young.

CHARLES SUKALO, *Primary Examiner.*

March 15, 1966 C. W. VAN RANST 3,240,179

COOLER

Filed Feb. 12, 1964 2 Sheets-Sheet 1

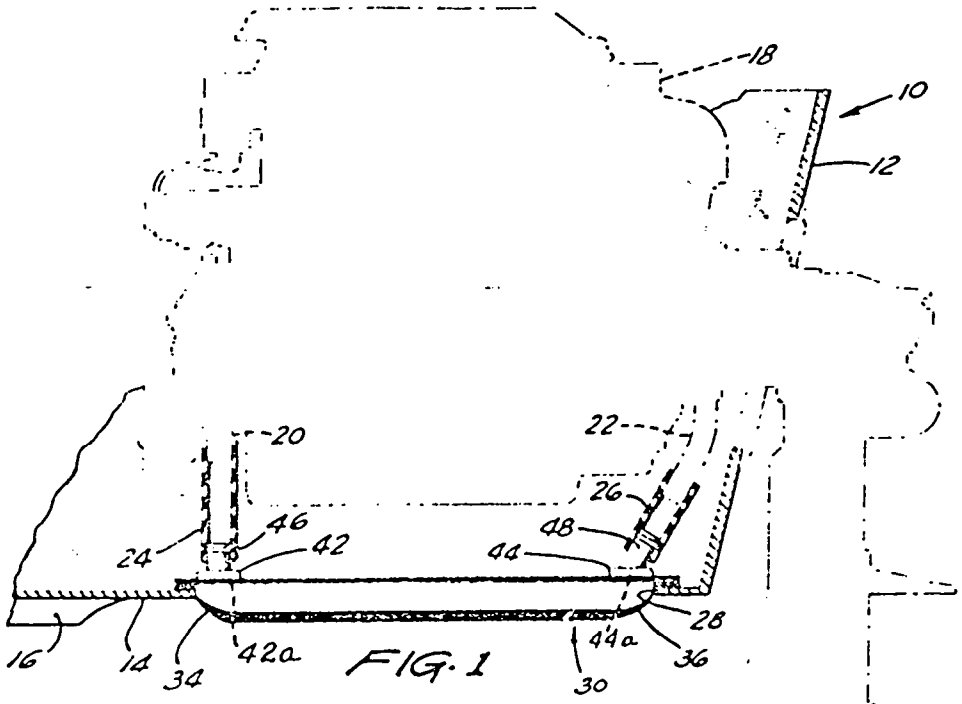

FIG. 1

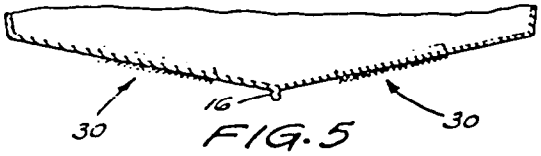

FIG. 5

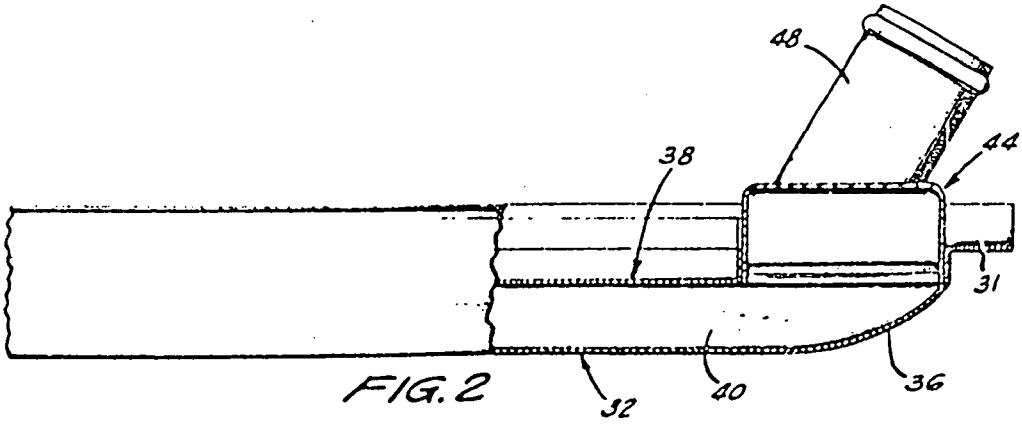

FIG. 2

INVENTOR
CORNELIUS W. VAN RANST
BY
Olsen and Stephenson
ATTORNEYS

March 15, 1966 C. W. VAN RANST 3,240,179

COOLER

Filed Feb. 12, 1964 2 Sheets-Sheet 2

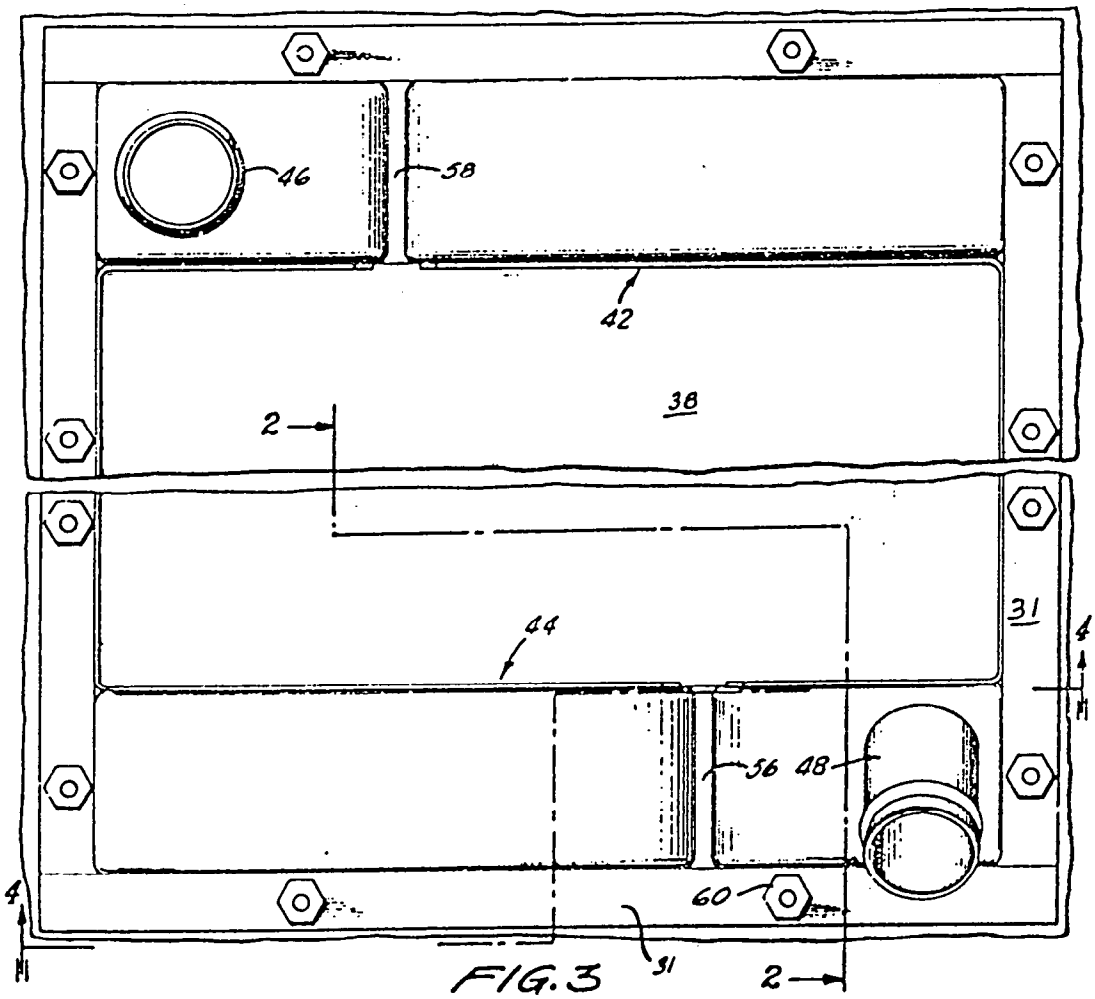

FIG. 3

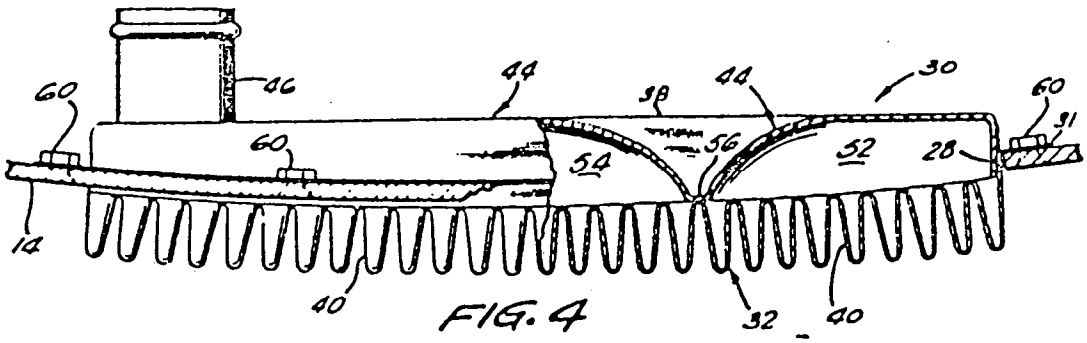

FIG. 4

INVENTOR.
CORNELIUS W. VAN RANST
BY
Olsen and Stephenson
ATTORNEYS

United States Patent Office 3,240,179 Patented Mar. 15, 1966

3,240,179

COOLER

Cornelius W. Van Ranst, 15692 Woodland Drive, Dearborn, Mich.

Filed Feb. 12, 1964, Ser. No. 344,351
2 Claims. (Cl. 115—.5)

The present invention relates to coolers adapted to be used with marine vessels to provide cooling for propulsion engines and other auxiliary apparatus requiring cooling liquids.

It is the common practice in the marine industry to use liquid cooling systems for cooling propulsion engines and other auxiliary equipment. In most instances where ocean-going vessels are concerned, an internal fresh water circuit is employed for cooling the engines or equipment, and a companion seawater circuit, including a heat exchanger, is used for removing heat from the fresh water of the fresh water circuit. Liquid cooling systems of this character have certain inherent defects, particularly where small vessels are concerned, and therefore, efforts have been made to develop coolers which serve to eliminate the need for the companion seawater circuit.

One of the results of these efforts has been a cooler which is adapted to be mounted on the external side of the hull below the waterline of the vessel, and the cooler is made a part of the internal fresh water circuit. It is intended that the fresh water in the circuit will have the required amount of heat removed therefrom by heat removing action of the seawater on the external side of the cooler. Under ideal operating conditions such coolers have operated satisfactorily, but it has been found that adverse conditions may arise which render the cooler partially or totally ineffective, causing the vessel to be disabled by reason of overheating of the apparatus which requires cooling. This situation is particularly critical if the marine vessel is for military purposes. Thus, difficulties have arisen in instances where the vessel has been required to move in shallow waters where various forms of debris are present or in waters where seaweed, or the like, are present.

It is an object of the present invention to provide an improved cooler for use with a marine vessel, which cooler is constructed and arranged so that it will provide optimum cooling under various conditions of operation of the marine vessel.

It is still another object of the present invention to provide a cooler of the foregoing character which is also characterized by its manner of construction, enabling it to be economically produced.

It is still another object of the present invention to provide a cooler of the foregoing character which provides relatively large effective heat exchange areas in proportion to the size of the complete unit, and which has flow characteristics on both internal and external surfaces to provide a highly efficient heat exchange unit.

It is still another object of the present invention to provide a cooler which is characterized by the absence of flow obstructing portions outboard of the skin of the vessel.

Other objects of this invention will appear in the following description and appended claims, reference being had to the accompanying drawings forming a part of this specification wherein like reference characters designate corresponding parts in the several views.

In the drawings:

FIGURE 1 is a fragmentary vertical section taken along the keel of a marine vessel showing a propulsion engine in broken lines and showing the side elevation of a cooler embodying the present invention;

FIGURE 2 is an enlarged fragmentary side elevation, partially in section, showing one end of the cooler;

FIGURE 3 is an enlarged fragmentary top plan view of the cooler, with the midportion removed;

FIGURE 4 is a sectional view taken on the line 4—4 of FIGURE 3; and

FIGURE 5 is a reduced transverse section through the bottom portion of another marine vessel, showing an arrangement whereby two coolers are mounted in the vessel.

Before explaining the present invention in detail, it is to be understood that the invention is not limited in its application to the details of construction and arrangement of parts illustrated in the accompanying drawings, since the invention is capable of other embodiments and of being practiced or carried out in various ways. Also, it is to be understood that the phraseology or terminology employed herein is for the purpose of description and not of limitation.

Referring now to the drawings, the invention will be described in greater detail. The marine vessel 10 has a hull with a stern or transom 12 and a generally flat bottom or skin 14 along which extends the keel 16. Mounted within the vessel 10 is the internal combustion engine 18 adapted to function as the propulsion engine. The engine 18 has a conventional fresh water cooling system with inlet and outlet hose fittings 20 and 22 to which are connected, respectively, the hoses 24 and 26. The bottom or skin 14 has an opening 28 therein which is closed by the cooler 30 which is fitted thereinto.

The illustrated embodiment of the invention is formed from a plurality of sections of stainless steel sheet material, which sections are joined together into an integral structure by suitable means, such as welding. The specific shapes of each of the various sections will not be discussed in detail, because it will be apparent to those skilled in the art that the cooler can be fabricated in various ways and still arrive at the same configuration that is disclosed in the drawings.

The cooler 30 has a bottom or outer sheet portion 32 which has a transverse sinuous configuration, as seen best in FIGURE 4, and the bottom or outer sheet portion 32 curves upwardly in streamlined fashion at its opposite ends 34 and 36. Between opposite ends 34 and 36 and located on the top inner surface of the sheet portion 32 is another sheet portion 38 which closes the spaces between the top or innermost ends of the convolutions in sheet portion 32, thereby defining a plurality of closed, parallel spaced tubes 40 extending fore and aft in the cooler 30 between the opposite ends 34 and 36. The tubes 40 open at their opposite ends 34 and 36, respectively, into headers 42 and 44 which have their respective openings 42*a* and 44*a* (FIGS. 1 and 2) disposed in a common plane and which hose fittings 46 and 48 extending upwardly therefrom and to which the hoses 24 and 26 are adapted to be connected. Thus, water, or other liquid coolants can flow into one header 42 or 44, through one of the openings 42*a* or 44*a*, through the tubes 40 and out the other header 42 or 44 through the other opening 42*a* or 44*a*. The headers 42 and 44 can be constructed to determine the number of passes the water makes between the headers before exiting from the cooler 30.

The perimetrical parts of the bottom or outer sheet portion 32 are extended outwardly of the tube convolutions 40 to form a flange 31 for fastening the cooler unit in the hull opening 28. As clearly shown in FIG. 4, this perimetrical flange 31 is disposed above the plane of the sheet portion 38 substantially equal to the thickness of the hull bottom 14. Thus, when the cooler unit 30 is set in the hull-bottom opening 28 the upper or inner ends of the tube convolutions 40 are disposed substantially in the plane of the skin bottom 14. Hence,

the entire mid-portions of all of the tubes 40 are disposed entirely below the plane of the respective openings 42*a* and 44*a* to the headers.

The disclosed embodiment is constructed and arranged so that the water flowing between the hose fittings 46 and 48 will make three passes through the tubes 40 before leaving the cooler 30. This is accomplished by a partition arrangement provided in each of headers 42 and 44. As shown in FIGURES 3 and 4, the header 44 has a pair of compartments 52 and 54 which are separated by the top wall being connected at 56 to one of the top or innermost convolutions of sheet portion 32. Similarly, the header 42 has its top wall connected at 58 to another of the top or innermost convolutions of sheet portion 32. By virtue of this arrangement, a liquid entering header 44 through hose fitting 48 will initially travel lengthwise through the group of tubes 40 comprising the nine tubes in the right of FIGURE 4 then transversely across the compartment in header 42 which terminates at the connection 58, after which the liquid will travel lengthwise through the group of tubes 40 comprising the nine tubes in the center of FIGURE 4, then transversely across compartment 54, and then once more in the lengthwise direction through the group of tubes 40 comprising the nine tubes in the left of FIGURE 4 and to header 42 and out hose fitting 46.

As can be seen best in FIGURES 1, 2 and 4, only the tube portions 40 of the cooler 30 project outwardly from the skin 14 of the vessel 10, and the fore and aft ends of such tubes 40 are streamlined and merge into the skin 14 so that debris, weeds and the like, will not readily adhere to the tubes to interfere with the heat transfer from the liquid within the tubes 40 to the ambient water. Thus, the maximum heat transfer relationship is established and minimum opportunity is provided for interfering with the flow across the tubes 40 of the ambient cooling water.

It is also to be observed that the optimum flow characteristics of the fresh water within cooler 30 is provided so that maximum cooling efficiency is realized. It is to be noted that a smooth flow path exists from the tubes outside the skin of the ship back to the headers which are within the confines of the skin of the vessel.

The fabricated cooler 30 is secured at its peripheral edge to the hull of the vessel 10 by suitable means, such as the plurality of screws shown at 60. Thus, the cooler 30 forms, in effect, a closure in the hull of the vessel 10.

The cooler 30 is shown located adjacent to the stern of the vessel 10 in alignment with the keel 16. If desired, additional coolers may also be located on opposite sides of the keel 16, as is shown, by way of example, in FIGURE 5. Thus, separate coolers can be used for cooling

purposes in connection with a plurality of pieces of apparatus.

Having thus described my invention, I claim:

1. A marine vessel having a hull opening in the bottom thereof below the water line, a cooler comprising an outer sheet portion of sinuous configuration forming a series of parallel tube convolutions between opposite perimeters thereof, a pair of headers disposed transversely along the opposite perimeters of the outer sheet portion and having bottom openings communicating with the adjacent ends of the respective tube-forming convolutions, another sheet portion superimposed on the lower sheet portion between the headers and closing the innermost ends of the series of tube-forming convolutions, means fixed at diagonally opposite ends of the respective headers for communication with a fluid cooling system, each of the headers having a wall portion connected to one of the convolutions of the lower-sheet portion to transversely partition the header in two compartments, an outwardly-extending flange integrated with the outer sheet portion and disposed in a plane above the inner ends of the tube-forming convolutions and extending entirely around the perimeter of outer sheet portion, the unit being set in the hull opening with the flange secured to the hull to dispose the tube-forming convolutions entirely below the skin of the vessel bottom.

2. A cooler comprising an outer sheet portion of sinuous configuration forming a series of parallel tube convolutions between opposite perimeters thereof, a pair of headers disposed transversely along the opposite perimeters of the outer sheet portion and having bottom openings communicating with the adjacent ends of the respective tube-forming convolutions, another sheet portion superimposed on the lower sheet portion between the headers and closing the innermost ends of the series of tube-forming convolutions, means fixed at diagonally opposite ends of the respective headers for communication with a fluid cooling system, and each of the headers having a wall top portion connected to one of the convolutions of the lower sheet portion adjacently inward from the respective bottom opening by an inwardly curved portion of the top wall of the respective header to transversely partition the header into two compartments.

References Cited by the Examiner

UNITED STATES PATENTS

1,511,691	10	1924	Valk	165—44 X
2,415,154	2	1947	Walter	115—0.5 X
2,382,218	8	1945	Fernstrum	115—0.5

MILTON BUCHLER, *Primary Examiner.*

ANDREW H. FARRELL, *Examiner.*

United States Patent [19]

Knaebel et al.

[11] **3,841,396**

[45] **Oct. 15, 1974**

[54] **FINNED HEAT EXCHANGER AND SYSTEM**

[76] Inventors: **Thomas C. Knaebel**, 405 Lindgate Dr.; **Douglas G. Birk**, 917 Mindy Ln., both of Kirkwood, Mo. 63122

[22] Filed: **June 12, 1973**

[21] Appl. No.: **369,225**

[52] **U.S. Cl.** **165/44, 165/168**

[51] **Int. Cl.** **B61d 27/00**

[58] **Field of Search** 165/44, 80, 47, 168, 169, 165/171

[56] **References Cited**

UNITED STATES PATENTS

3,305,004	2/1967	Barlowe	165/80
3,550,678	12/1970	Pfouts	165/44
3,650,310	3/1972	Childress	165/44

Primary Examiner—Charles Sukalo

Attorney, Agent, or Firm—Paul M. Denk

[57] **ABSTRACT**

In a heat exchanger primarily for usage in conjunction with a marine vessel, said heat exchanger includes a longitudinal member formed having at least one passageway provided therethrough, and a series of radially extending fins integrally connecting longitudinally of said member. The longitudinal member is preferably approximately semicircular in configuration, with said fins extending from the conic-like surface of said semicircular design, with the other or flat surface of said member provided for flush mounting against the hull of the vessel. Said fittings communicate by means of fluid lines with the cooling system of the inboard engine of the vessel, thereby providing a path for transfer of its cooling fluid or medium from said engine, and through the heat exchanger for effective dissipation of its heat out of the radial fins and into the ambient water.

2 Claims, 6 Drawing Figures

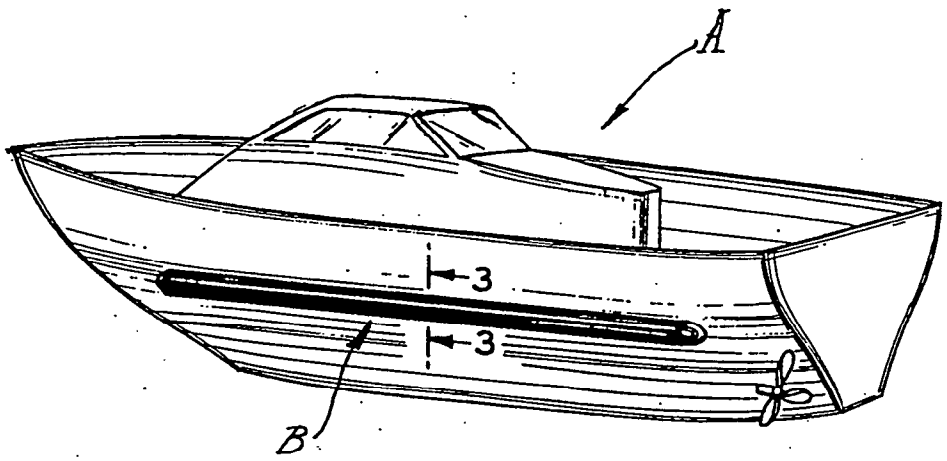

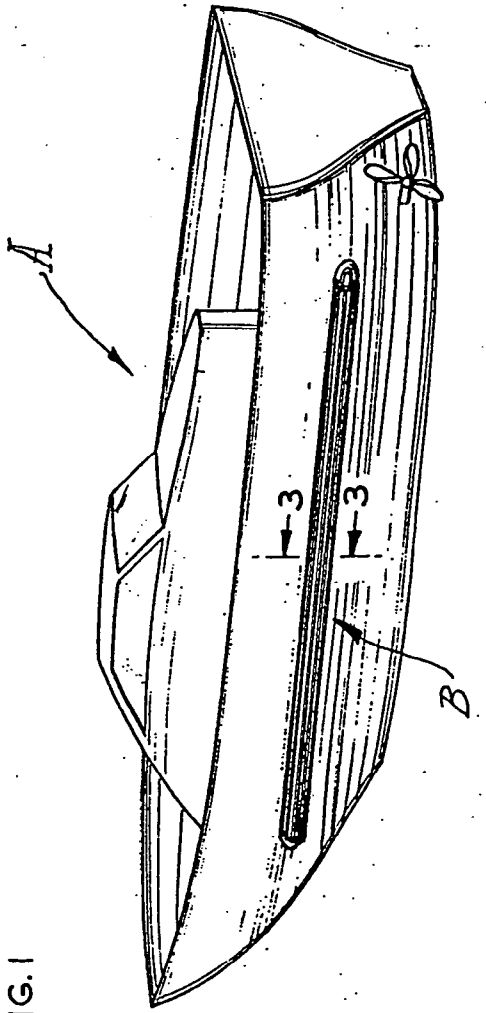

FIG. 1

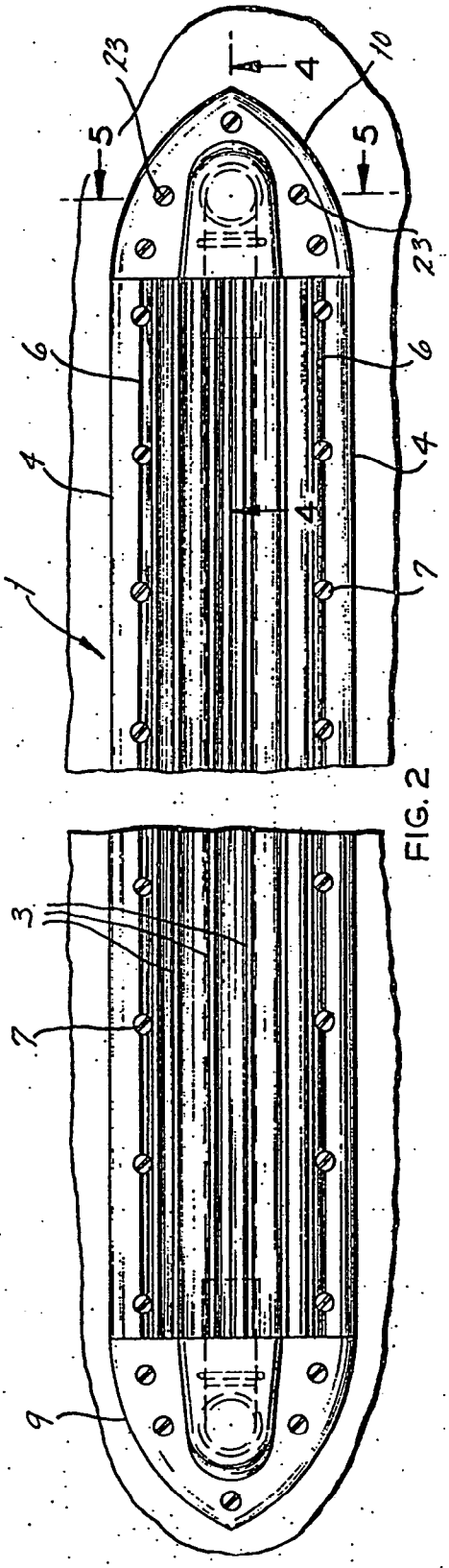

FIG. 2

FIG. 3

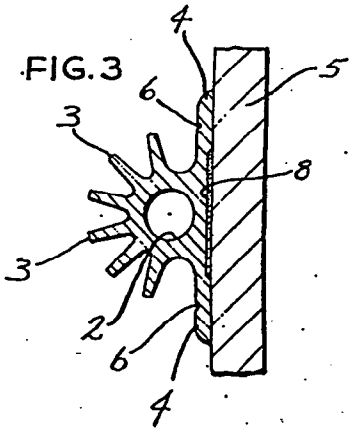

FIG. 4

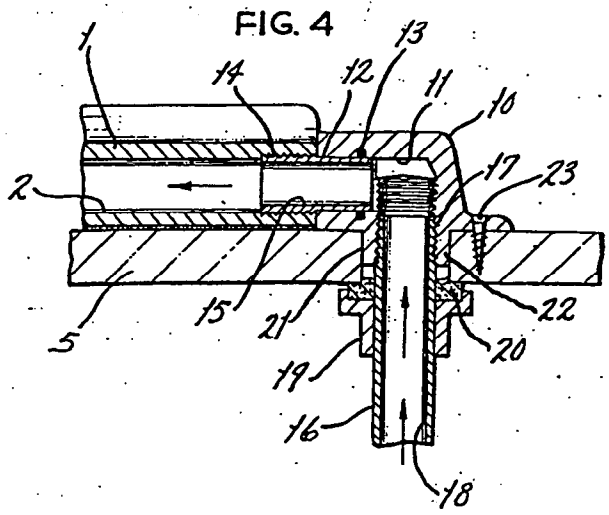

FIG. 5

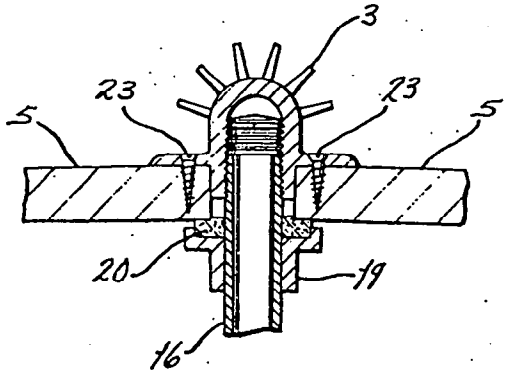

FIG. 6

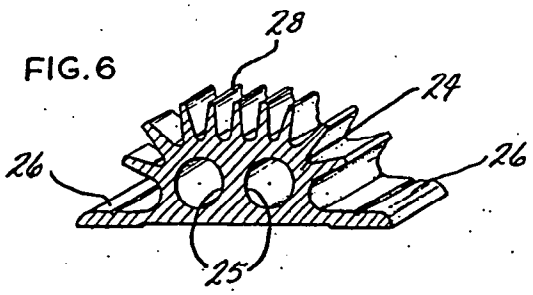

FINNED HEAT EXCHANGER AND SYSTEM

BACKGROUND OF THE INVENTION

This invention relates to a heat exchanger, but more particularly, one that preferably has application for enhancing heat transfer from the inboard motor of a boat or other marine vessel.

Various styles of heat exchangers have been provided in the prior art principally for use in conjunction with the hull of the vessel and designed for dissipating the heat generated within its internal combustion engine. Most of these heat exchangers, or coolers, are designed having headers that mount to the keel of a vessel, said headers communicating with the cooling jacket of the boat engine, and further providing one or more tubes extending between said headers and through which the cooling means may be pumped to facilitate its heat exchange. These prior art devices are generally effective for their intended purposes, but the present invention provides a unique design in this type of a heat exchanger and which achieves enhanced heat transfer through the use of a finned heat exchanger mounting flush and longitudinally upon the hull of the vessel.

It is, therefore, the principal object of this invention to provide a heat exchanger which attains increased heat transfer from a longitudinally finned heat exchanger. It might be stated that the marine industry has long been plagued with failures in its engines, pumps, oil coolers, water condensers, refrigeration condensers, primarily due to the corrosive action of sea water which has heretofore frequently been used as the cooling medium. As is well known, electrolytic corrosion, fretting and general decomposition of the heat exchange materials through their contact with the sea water has been a constant source of costly maintenance and repair. Many hazardous and catastrophic failures at sea have been caused by breakdowns of this type due to the fact that the deterioriation of the aforesaid nature is generally concealed from view with the corrosive effects of the sea water generally being undetectable beforehand.

Hence, it is another object of this invention to provide a unique and improved heat transfer system for the cooling of the internal combustion engine, its lubricating oil, and for a refrigeration condenser cooling and the like. Generally, this system contemplated a closed loop cooling system method by which the heat dissipation is affected through the disposition of a finned heat exchanger to the surrounding heat absorbing environment, rather than, as previously described with respect to the marine industry, having to absorb any sea water inboard to cool its aforesaid mechanical apparatuses.

It is another object of this invention to provide a heat exchanger which may be mounted longitudinally of the hull of a vessel, disposing its radial fins to the sea water, and being arranged in a manner that enhances the streamlined design and functioning of the keel and bilge portions of the vessel to reduce drag on its hull during movement.

An additional object of this invention is to provide a heat exchanger which can be easily manufactured, and whose installation can be easily accomplished due to its composite and compact design by one not necessarily possessing high mechanical skill.

The foregoing and other objects will become more apparent to those skilled in the art in light of the following summary, and upon reviewing the description of the

preferred embodiment in view of the accompanying drawings.

SUMMARY OF THE INVENTION

The invention contemplates a heat exchanger which incorporates structure that performs two basic purposes, first, providing a passageway through a longitudinal member which integrally incorporates a series of radially disposed fins, for enhancing heat exchange for cooling the medium traversing through its passageway, while secondly, the invention incorporates flange means integral with the longitudinal member to provide for flush and stable mounting of the device to a supporting surface. while the heat exchanger may be utilized in a variety of applications, more preferably, it has been constructed for use in conjunction with the hull of a vessel, mounted below its water line when buoyant, and thereby expose the finned exchanger to the ambient water to enhance heat flow into the said surrounding environment.

As stated, the heat exchanger incorporates a longitudinal like member, which principally is manufactured as a straight member, but may be constructed of any malleable material, such as aluminum, magnesium, or the like, so that it may be contoured slightly to provide for its flush mounting upon the supporting surface to which it will be connected, for example, the curved side of the vessel. The longitudinal member provides at least one passage along its length, and at either end is connected to a fitting which may be rigidly secured to the surface of the hull, with each fitting communicating with a flow line to provide for transfer of the engine's cooling medium through the exchanger and to and from its cooling jacket. Preferably the invention has been designed for providing a means for cooling the water or other cooling medium normally contained within the cooling jacket of an internal combustion engine, such as the type usually utilized within an inboard marine vessel, but the invention may also be utilized for cooling other of its fluids, such as its lubricating oil. In addition, the invention can be constructed into a closed loop type of heat dissipator, containing a permanent type of anti freeze where needed, and be installed during manufacture of the vessel. Furthermore, the invention could be adapted to other types of apparatuses for cooling any of its warmed mediums, through exposure of its finned longitudinal members to the surrounding ambient environment. While the preferred embodiment of this invention discloses the longitudinal member as having its radial fins extending outwardly from its surface, it is just as likely, and within the teachings of the heat exchange art, that the radial fins could extend inwardly of the longitudinal member within its flow passageway, and thereby radiate the cooling mediums heat through said fins and longitudinal member into the surrounding atmosphere.

BRIEF DESCRIPTION OF THE DRAWINGS

In the drawings,

FIG. 1 provides a perspective view of a marine vessel disclosing the heat exchanger of this invention as being mounted adjacent its hull;

FIG. 2 provides a partial plan view of the heat exchanger of this invention;

FIG. 3 provides a cross-sectional view of the heat exchanger taken along the line 3—3 of FIG. 1;

FIG. 4 provides a sectional view of one end or the heat exchanger taken along the line 4—4 of FIG. 2;

FIG. 5 provides a sectional view of one fitting of the heat exchanger taken along the line 5—5 of FIG. 2; and

FIG. 6 provides a sectional view similar to the view disclosed in FIG. 3, but showing a modification in said heat exchanger.

DESCRIPTION OF THE PREFERRED EMBODIMENT

In referring to FIG. 1, there is disclosed a marine vessel, such as an inboard yacht A, and which shows the invention B being mounted lengthwise along the hull of the vessel below its water line, so that any heated medium flowing through the heat exchanger will be exposed preferably to the sea water to enhance heat transfer from the said cooling medium. As will be hereinafter described, the preferred embodiment of this invention does contemplate the use of fins upon its external surface, and by properly arranging this heat exchanger at a location approximate the bilge of the hull, or where its sides commence to rise vertically from said bilge, not only is increased heat exchange achieved, as aforesaid, but the planing characteristics of the vessel during usage can be enhanced.

The heat exchanger B is more aptly disclosed in FIGS. 2 and 3, and is therein shown comprising a longitudinally disposed member 1 provided with at least one passageway therethrough along its length, with said longitudinal member having a series of radiating fins 3 extending integrally from its surface, and useful for dissipating the heat of any fluid medium that may be flowing through said passageway 2. It is to be noted that these fins are somewhat thicker at their base where they join integrally with the surface of the longitudinal member than they are at their tips where they extend and project into the surrounding environment, such as the sea water, and with this type of design provides for uniform and constant heat transfer along their length and height. As previously described, it is likely that these fins could project interiorly of the passage 2 and provide some service in inducing heat transfer from the cooling medium flowing therethrough for exchange into the surrounding environment.

The longitudinal member 1 is also provided with a pair of integral flanges 4 that extend laterally from its base, and is useful for providing flush mounting of the heat exchanger against any surface, such as the hull 5 of the vessel A. Each flange is provided with a longitudinal groove 6 along its length, and facilitates the locating and positioning of the fastener means, such as the screws 7, that stably mount the heat exchanger to a surface. It is also to be noted from FIG. 3 that the underside of the heat exchanger is provided with a recessed portion 8 which provides clearance to enhance its flush mounting to a surface when the fasteners 7 are attached. Obviously, it is easier to acquire the slight bending necessary to the heat exchanger flanges 4 and conform them to the supporting surface to which it mounts upon application of the fastener 7 by providing a recess at this base portion.

As also shown in FIG. 2, in addition to FIGS. 4 and 5, there are provided a pair of fittings 9 and 10 at either end of the longitudinal member 1 of the heat exchanger, and each fitting is provided with a passageway 11 therethrough and angularly turned, approximately 90°, to provide an inward directing of the flow of the cooling medium into the hull of the vessel and to provide for attachment to the various flow lines communicating with the cooling jacket of the vessel's engine, its lubricating oil reservoir, or other standard components of the internal combustion engine of said vessel that require cooling. Each fitting cooperates with a connector 12 which is snugly and hermetically sealed within its passageway 11 by means of a sealing ring 13, while the other end of said connector may be threadedly engaged, as at 14, internally within the passageway 2 of the longitudinal member 1. Obviously, it is just as likely that said connector may threadedly engage within the fitting 10, while its other end may be secured within the heat exchanger as shown at 14, or perhaps a sealing ring may be used at that location for hermetically sealing the connector within the passage of said heat exchanger. As can be seen, the connector 12 itself is also provided with a passageway therethrough, as at 15, to provide for unobstructed flow of the cooling medium therethrough and into or out of the passage 2.

A second connector 16 is threadedly engaged, as at 17, within the opposite end of the connector 10, and also incorporates an internally formed passageway 18 through which the cooling medium may flow while traveling to or from the heat exchanger member 1. The means for providing a fluid type connection of both the fitting and the connector 16 to the hull 5 of the vessel may be achieved in the usual manner, whereby a fastening ring 19 may threadedly engage said connector 16, or be fixedly attached in any other manner, for pressing against another sealing ring 20 that compresses against the inner side edges of the aperture 21 provided through the hull 5. Likewise, the fitting 10 is provided with a lip 22 that is designed for snug fitting within the hull aperture 21, and an integral flange surrounding the fitting 10 is designed for accommodating a series of fastening means, such as the screws 23 for securely mounting the fitting to said hull. Hence, a fluid type seal may be provided through the hull in this manner so as to prevent, as in the case of a vessel, any sea water from leaking into the same, while likewise, the fluid tight seal provided between the various connectors 12 and 16 with the fitting 10, and the longitudinal member 1 of the heat exchanger, prevents any undesirable intermixing of sea water with the cooling medium or other fluid passing through and receiving the advantages of the heat exchanger of this invention.

A modified form of the longitudinal member of this heat exchanger is shown in FIG. 6, wherein said longitudinal member 24 may be formed having a pair of passageways 25 provided therethrough so as to enhance the heat transfer characteristics of the device, with said member having the integral flanges 26 extending laterally from either side and being formed for functioning in the manner as previously described. Likewise, a series of fins 28 project, as shown in this case, exteriorly from the longitudinal member 24 to enhance heat flow out of the heat exchanger.

For further elaboration, the longitudinal members of this invention are generally formed having a configuration somewhat of a semicircular design, with the fins radiating from the conic like surface of said member, and the said flanges projecting laterally from what may be described as the flat portion of the semicircular design of the heat exchanger when viewed in cross section. Hence, and where the invention is disclosed in this

modified form as in FIG. 6, the cross section of the longitudinal member will not comprise an exact semicircular design, but it still contains somewhat of a conic design so as to provide a surface from which the fins may project reasonably radially for extending into the surrounding ambient environment.

Where the heat exchanger is to be used upon the hull of a sea-going vessel as previously analyzed, it has been found that this particular design of a heat exchanger is advantageous over what is disclosed in the prior art, since the flanges 4 and 26 of the member are disposed for flush mounting against the hull of the vessel, and thereby little or no foreign matter can become adheared to or lodged against the same, such as seaweed or other floating debris. Furthermore, the accumulation of barnicles, algae, or other bacterial growths are prevented from accummulating or germinating between the heat exchanger and the vessel hull due to the flush mounting of the flanges of this invention, which incidentally, may be additionally adheared to the hull through the use of an epoxy or other adhesive. Furthermore, the streamlined effect provided in having the fins radially extending from a heat exchanger enhances the removal of any algae as the vessel travels through the water, due to the projection of its fins into the same.

Numerous variations in the construction of the heat exchanger of this invention, within the scope of the appended claims, will occur to those skilled in the art in light of the forgoing disclosure. For example, as previously described, it might be desirable to extend the fins of the heat exchanger inwardly, rather than exteriorly, so as to minimize any damage that might be caused through the encountering of logs or driftwood that these vessels usually contact during usage. The embodiments shown and described are merely illustrative of the principles of this invention.

Having thus described the invention what is desired to be secured by Letters Patent is:

1. In combination with a water buoyant marine vessel incorporating an engine and cooling jacket capable of holding a supply of cooling medium, a heat exchanger mounted to the external surface of the hull of the vessel below its water line, a pair of fluid flow means connecting the proximate ends of said heat exchanger to the cooling jacket of the engine for use in transfer of the cooling medium to and from said jacket, said heat exchanger including a longitudinal member of a length to provide for its connection in a direction approximately along the length of the hull, said longitudinal member having at least one passage formed therethrough, said longitudinal member being approximately semicircular in cross section and formed having a conic-like side and a flat surface, a series of radially disposed longitudinal fins integrally formed from the conic-like side of the longitudinal member and extending into the ambient environment to enhance heat dissipation from the cooling medium, said radial fins being formed having a tapered design and narrowing from their connection with and extension from the conic-like side of the longitudinal member of the heat exchanger, flanges integrally connecting to and extending diametrically from either edge of the flat surface of said heat exchanger along the length of its longitudinal member, fastening means cooperating with said flanges to secure said heat exchanger to the vessel hull, said flanges being provided with slots along their length to facilitate the positioning of said fastening means, the combined flat surface of the heat exchanger and the underside of said flanges being formed having a recess therein to provide clearance for flush mounting of said heat exchanger to the vessel hull, said heat exchanger including a pair of fittings at the ends of its longitudinal member for hermetically sealing the exchanger at the location where it connects interiorly of the hull for communicating with the fluid flow means of said cooling jacket, connectors provided for securement of said fittings to each end of the longitudinal member, each connector inserting into the end of said longitudinal member and also into the proximate fitting, a sealing ring provided between said fitting and its connector to hermetically seal the same together, both of said connectors and the fittings have passages formed therethrough communicating with the passage of the longitudinal member for accommodating the flow of the cooling medium of the engine therethrough, additional connectors attaching with the fittings and disposed for extending through the hull of the vessel, a fastening ring cooperating with each said additional connectors for hermetically sealing said heat exchanger to the vessel hull to prevent interior leakage of the ambient water.

2. The invention of claim 1 wherein said longitudinal member of the heat exchanger is provided with a pair of passages internally along its length to accommodate the flow of the cooling medium therethrough.

* * * * *

United States Patent [19]

Arnold

[11] **Patent Number: 4,557,319**

[45] **Date of Patent: Dec. 10, 1985**

[54] **MARINE KEEL COOLER**

[76] Inventor: **Alanson J. Arnold**, 16 Bluebird St., New Orelans, La. 70124

[21] Appl. No.: **394,943**

[22] Filed: **Jul. 2, 1982**

[51] **Int. Cl.**[4] **B60H 3/00; B63B 1/34**

[52] **U.S. Cl.** ..... **165/44**; 165/41; 440/88; 114/67 R

[58] **Field of Search** ..... 165/44, 41; 440/88; 114/67 R

[56] **References Cited**

U.S. PATENT DOCUMENTS

36,808	10/1962	Stevens	440/88
257,360	5/1982	Messervey	165/41
1,290,112	1/1919	Deckert	165/174
1,408,868	3/1922	Dutcher	114/67 R
2,356,844	8/1944	Higgins	165/44
2,382,218	8/1945	Fernstrum	440/88
2,415,154	2/1947	Walter	165/44
2,914,012	11/1959	Godfrey et al.	440/88
3,240,179	3/1966	Van Ranst	440/88
3,352,118	11/1967	Burkhardt	114/67 R
3,841,396	6/1973	Knaebel et al.	165/44
4,043,289	8/1977	Walter	165/44

FOREIGN PATENT DOCUMENTS

11379	6/1924	Netherlands	165/41

Primary Examiner—William R. Cline
Assistant Examiner—John K. Ford

[57] **ABSTRACT**

Fore and aft headers are parallely spaced apart and connected by a plurality of tubes or pipes extending normal thereto and forming therewith a grid type heat exchanger. The headers are streamlined and fixed to the bottom of a marine vessel with the tubes spaced outwardly from the vessel's bottom and extending longitudinally therewith. The inboard and outboard sides of the tubes are narrowed to define wider entrances and exits between tubes than the spaces between adjacent sides of the tubes intermediate the inboard and outboard sides. The streamlined headers reduce flat plate resistance and resistance due to turbulent water flow to promote laminar water flow therebetween from forward to aft. The widened entrances and exits between tube tops and bottoms accelerates water flow up, around and between tubes by eliminating the "vena contracta" and increasing the flow around adjacent tube sides, thus increasing the rate of cooling of a coolant from an interior heat source. The flow of coolant from a heat source to the heat exchanger is to the after header, through the longitudinal tubes to the forward header and back to the heat source, the coolant always flowing oppositely to the cooling water flow and further increasing the cooling efficiency of the invention.

1 Claim, 4 Drawing Figures

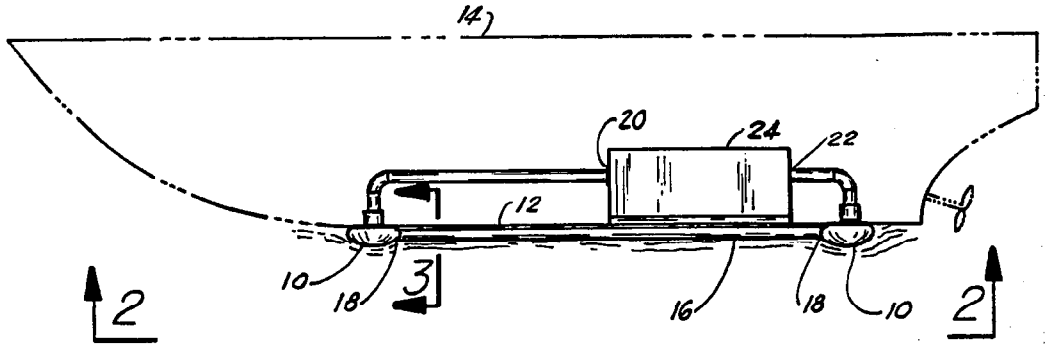

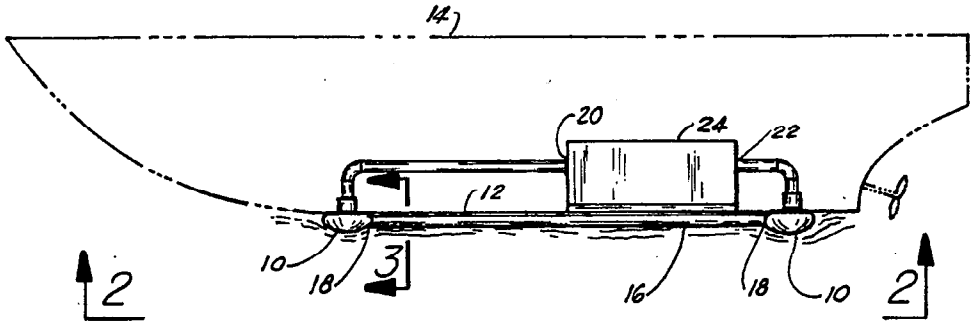

FIG. 1

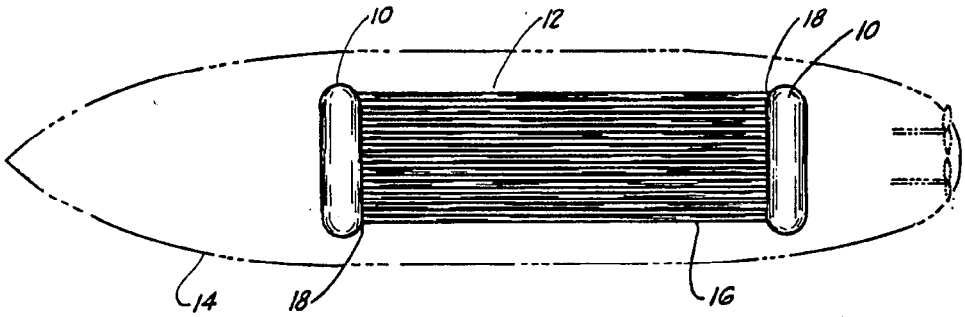

FIG 2

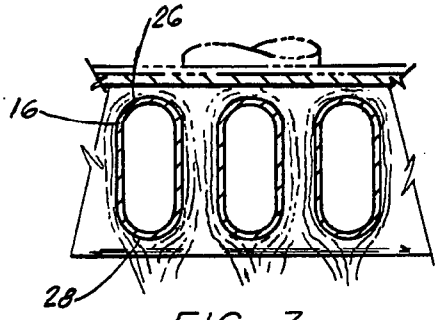

FIG. 3

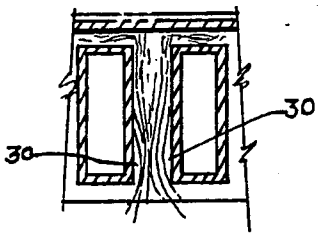

FIG. 4
PRIOR ART

MARINE KEEL COOLER

CROSS REFERENCE TO RELATED APPLICATIONS

This is a substitute for prior patent application for a Marine Keel Cooler, Ser. No. 889,773, filed Mar. 24, 1978, now abandonded.

BACKGROUND OF THE INVENTION

The invention relates generally to heat exchangers, and more particularly to marine keel coolers.

Keel coolers are well known in the prior art as disclosed by Higgins, U.S. Pat. No. 2,356,844; Walter, U.S. Pat. No. 4,043,289; Deckert, U.S. Pat. No. 1,290,112; and Knaebel, U.S. Pat. No. 3,841,396. Higgins teaches a Heat Dissipator for Marine Engines with round tubes circulating a coolant in both fore and aft directions between headers spaced both longitudinally and vertically apart. Each of the two headers is divided into two compartments which are connected by a small bleeder passage to prevent steam locks therein from stopping the circulation of the coolant through the tubes. Walter teaches an odd number of round and fluted tubes, one of which is longitudinally divided to provide an even number of passages in any combination of odd numbered tubes for providing for the circulation of coolant in both fore and aft directions, but having only one combination coolant entrance and exit. Deckert teaches a water heater having a plurality of oval tubes arranged radially in an inner casting sheel and extending longitudinally fore and aft therein. The oval tubes are unequally curved at the respective in and outboard sides with the widest curves coinciding with the widest tube spacing at the outboard sides for radial flow of a heating fluid around the tubes increased only at the narrow inboard tube sides. Knaebel teaches a finned heat exchanger for increasing and thinning heat transfer surfaces as in the fluting of Walter.

The invention differs from all of these and teaches an improved cooling in a keel cooler by a combination of both increasing the flow of cooling sea water between the tubes and the tube area where such flow occurs, by providing that the flow in the tubes are around the tubes is always in opposite directions, and by eliminating the vena contracta area between equally spaced apart tubes.

SUMMARY OF THE INVENTION

It is an object of the invention to provide a keel cooler for marine vessels in which heat transfer is maximized by increasing the flow of cooling sea water between tubes carrying a heated coolant by shaping and positioning said tubes relative to each other and the bottom of the vessel, by shaping headers to reduce flat plate resistance and flow turbulence, by eliminating vena contracta areas adjacent tops and bottoms sides of said tubes, and by flowing cooling sea water and heated coolant oppositely over the heat transfer surfaces.

BRIEF DESCRIPTION OF THE DRAWINGS

FIG. 1 is a side elevation of the invention showing installation if a marine vessel;

FIG. 2 is a bottom view of the matter in FIG. 1;

FIG. 3 is a cross-sectional view taken along section lines 3—3 of FIG. 1; and

FIG. 4 is a cross-sectional view similar to FIG. 3 showing the area of vena contracta in a conventional keel cooler.

DETAILED DESCRIPTION OF THE INVENTION

The invention comprises a pair of headers **10** transversely fixed to the bottom **12** of a marine vessel **14**. The headers are spaced longitudinally fore and aft and parallel to each other. Tubes **16** are connected normal to the headers by oppositely dispose tube ends **18**, and are thus parallel to each other also. Input and output ends **20** and **22** of a coolant water jacket **24** are respectively connected through bottom **12** to opposite headers **10** to provide a closed circulation of coolant through said output end **22** to after header **10**, tubes **16**, forward header **10**, coolant jacket input end **20**, and through coolant jacket and so on in continuous circulation opposite to the flow of the sea water around the tubes.

The streamlined headers **10** reduce flat plate resistance, direct a laminar flow of water upward and aft, with little or no turbulence, around tubes **16** and beyond.

Tubes **16** are vertically spaced below bottom **12** and are equally rounded at the respective top and bottom sides **26** and **28** to space these sides more widely than the adjacent sides **30** therebetween are spaced apart, thereby accelerating the flow of sea water between and around the tubes, eliminating area of vena contracts **32** (see FIG. **4**), and reducing turbulence of longitudinal sea water flow. Adjacent sides **30** are elongated giving the tubes a cross-section of a generally oval shape to increase the area of heat transfer surfaces to the accelerated cooling flow.

It is understood that coolant jacket **24** can be that of any shipboard heat source, such as an engine, condenser, or the like.

What is claimed is:

1. A marine keel cooler for cooling an operationally heated coolant of a marine vessel cooling jacket, having oppositely disposed cool input and hot output ends, comprising:

(a) a pair of parallel header means mounted transversely with respect to the keel and longitudinally spaced apart fore and aft on the exterior surface of the marine vessel bottom, and respectively connected through said bottom to said cool input and hot output ends of said cooling jacket, each of said header means having fore and aft edges adjacent said marine vessel bottom and a downwardly curved outer surface between said edges, for producing, as said vessel moves through the sea water in which it floats, a smooth laminar flow of said sea water over the outer surface of said header means; and

(b) a plurality of straight parallel coolant tube means spaced transversely apart from one another and from said vessel bottom having oppositely disposed ends, each of said tube means having upper rounded and lower rounded parallel sides and substantially planar parallel elongated right and left sides, defining a tube cross-section of a generally elongated oval shape, said oppositely disposed ends of said tube means being connected between said pair of header means to define a closed path for heated coolant through said tubes means, header means and said cooling jacket, said upper rounded and lower rounded parallel sides of adjacent tube

means eliminating areas of vena contracta between said spaced apart tube means and said elongated right and left sides of adjacent tube means defining therebetween a channel through which sea water flows with increased velocity by the venturi effect for effecting maximum heat transfer from said operationally heated coolant circulated through said header and tube means, and said curved outer surface of said forward header means acting to direct sea water upwardly and obliquely through said channels between said tube means as the vessel moves forward through the sea water.

* * * * *

US006575227B1

(12) **United States Patent**
Leeson et al.

(10) **Patent No.: US 6,575,227 B1**
(45) **Date of Patent: Jun. 10, 2003**

(54) **HEAT EXCHANGER**

(75) Inventors: **Jeffrey S. Leeson**, South Euclid, OH (US); **Eric K. Peoples**, Ravenna, OH (US); **Michael W. Brakey**, Shaker Heights, OH (US)

(73) Assignee: **Duramax Marine, LLC**, Hiram, OH (US)

(*) Notice: Subject to any disclaimer, the term of this patent is extended or adjusted under 35 U.S.C. 154(b) by 0 days.

(21) Appl. No.: **09/427,166**

(22) Filed: **Oct. 26, 1999**

(51) **Int. Cl.**[7] **F28D 1/00**; F28D 1/02; F28D 1/04

(52) **U.S. Cl.** **165/44**; 165/41; 165/173; 165/174; 440/88

(58) **Field of Search** 165/44, 41, 173, 165/174; 440/88

(56) **References Cited**

U.S. PATENT DOCUMENTS

2,415,154 A	*	2/1947	Walter	165/44
3,177,936 A	*	4/1965	Walter	165/44
3,240,179 A	*	3/1966	Van Ranst	164/144
4,338,993 A	*	7/1982	Fernstrum	165/44
4,557,319 A	*	12/1985	Arnold	165/44
5,931,217 A	*	8/1999	Fernstrum	165/44
6,099,373 A	*	8/2000	Fernstrum	165/44

* cited by examiner

Primary Examiner—John K. Ford

(74) *Attorney, Agent, or Firm*—D. Peter Hochberg; Katherine R. Vieyra; Sean Mellino

(57) **ABSTRACT**

A keel cooler having a beveled bottom wall, with orifices on the inner wall of the exterior tubes extending into the header, the orifices being in the natural flow path of coolant flow. The orifices are sufficiently large so as not to restrict the flow of coolant. The anode assemblies and drain plugs are mounted on the beveled bottom wall.

22 Claims, 14 Drawing Sheets

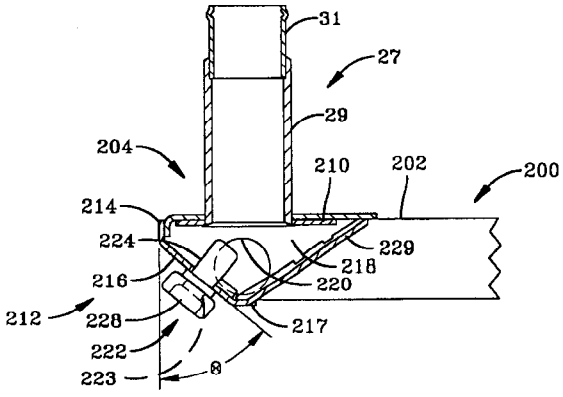

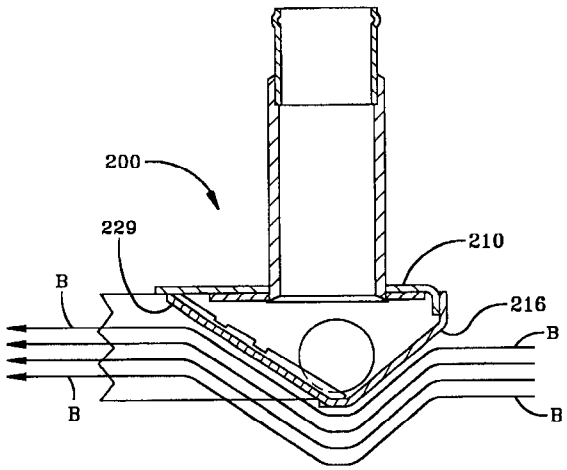

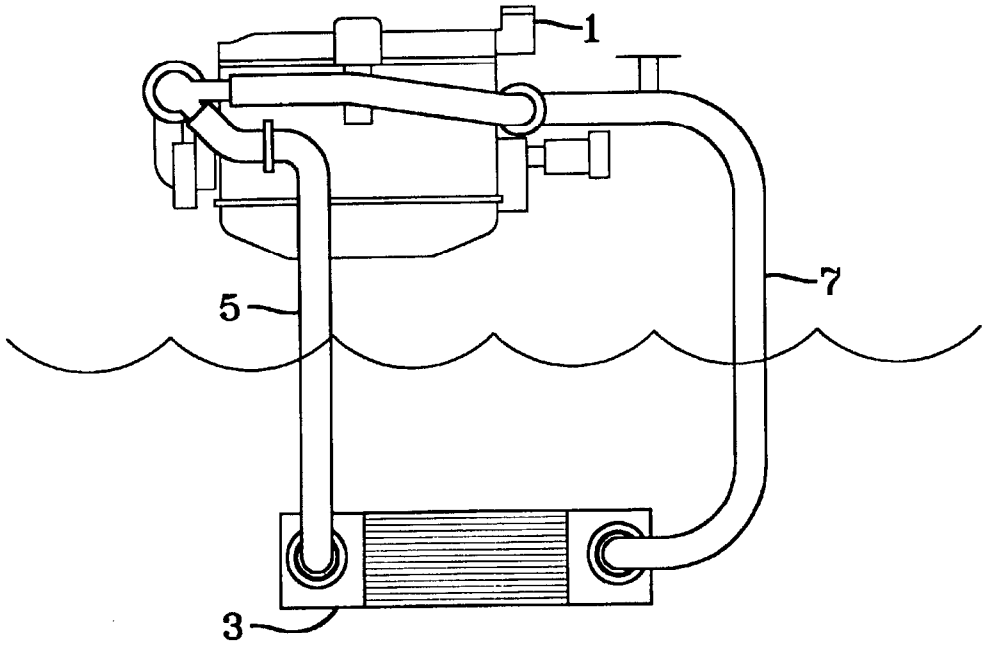

FIG–1

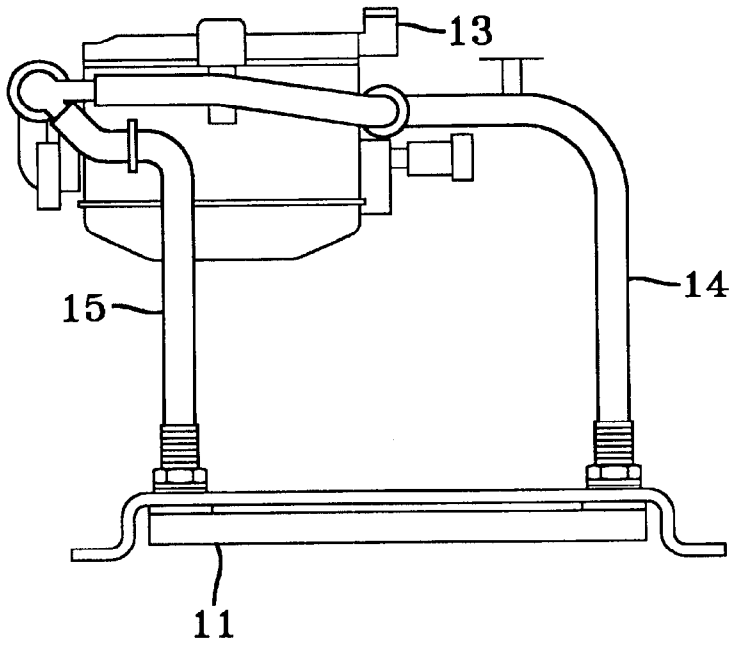

FIG–2
PRIOR ART

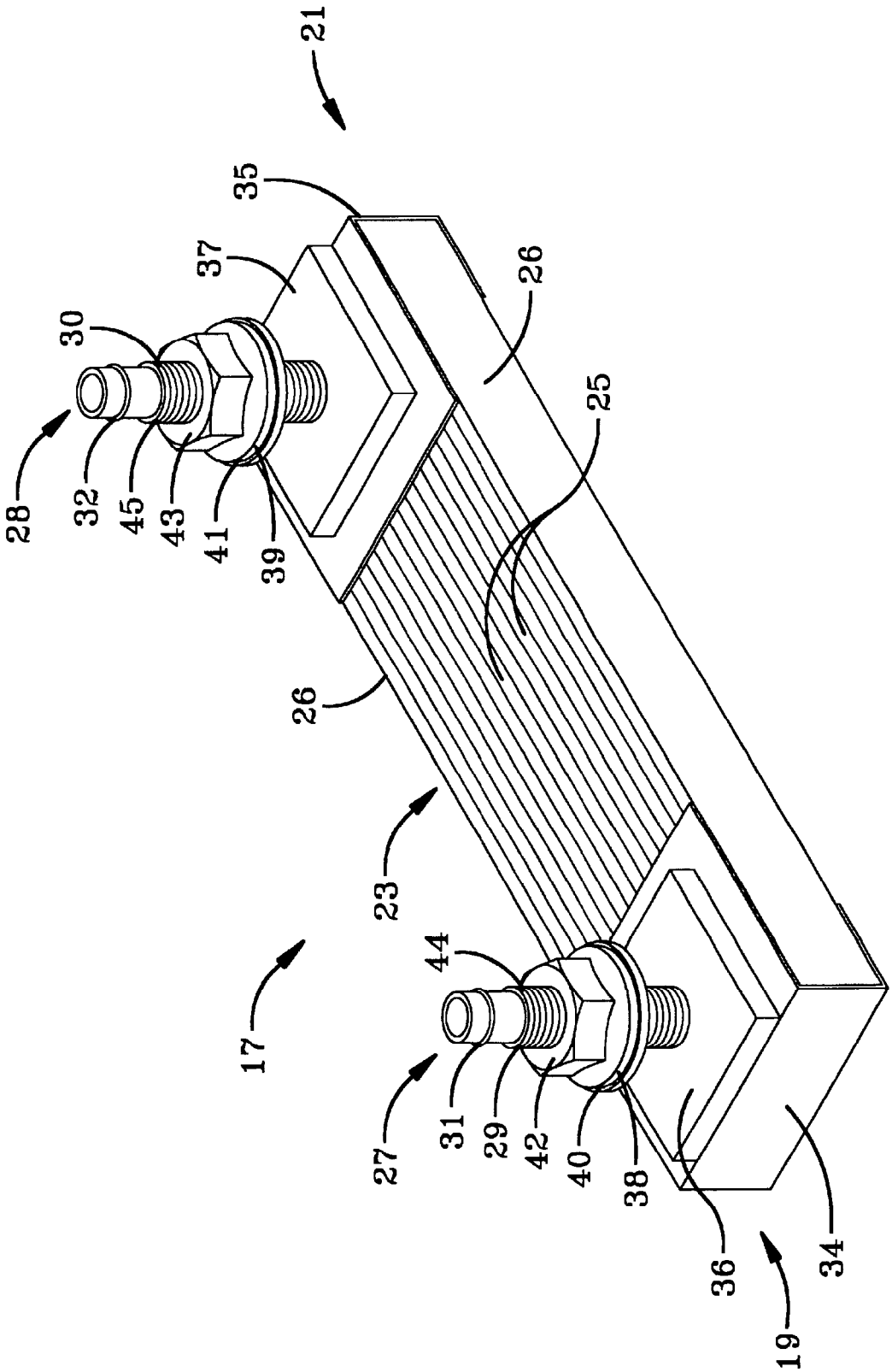
21
35
37
30
26
25
28
32
45
43
41
39
26
23
17
44
27
31
29
42
40
38
36
34
19

FIG-3

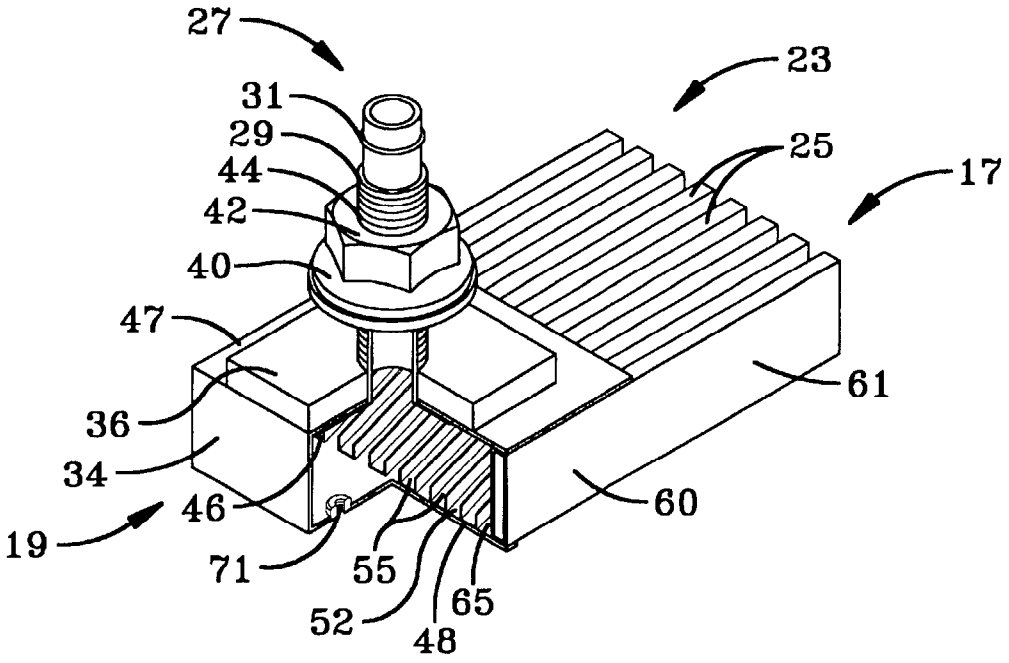

FIG–4
PRIOR ART

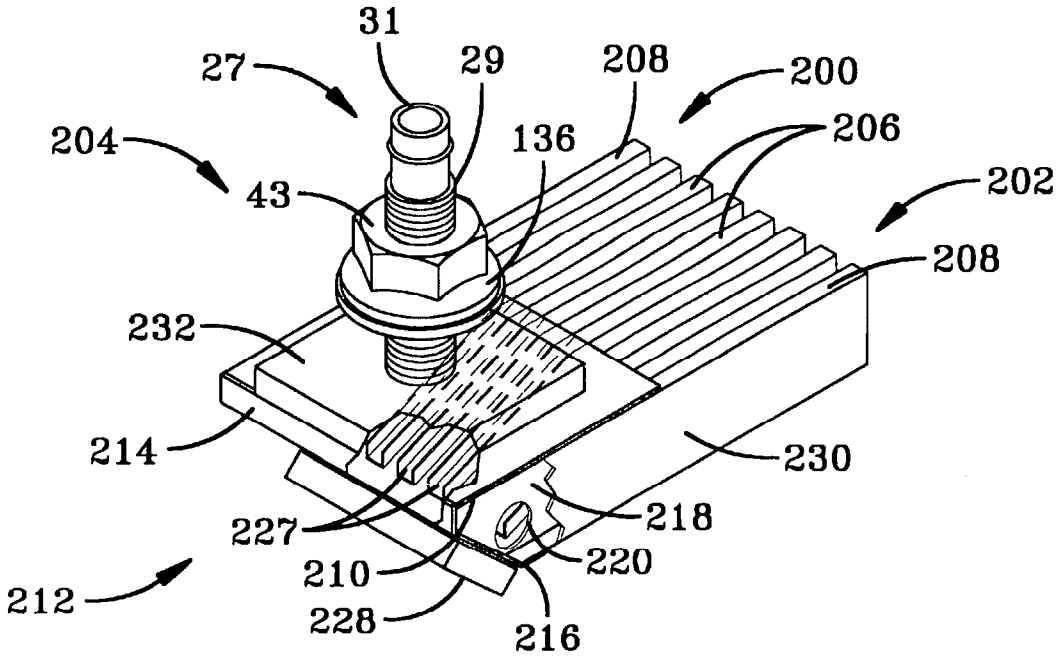

FIG–7

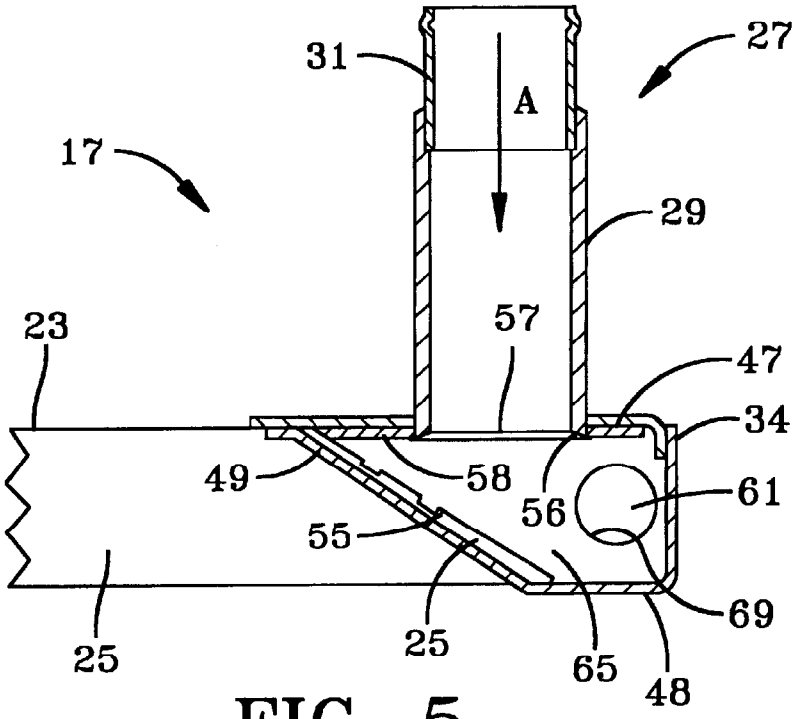

FIG–5
PRIOR ART

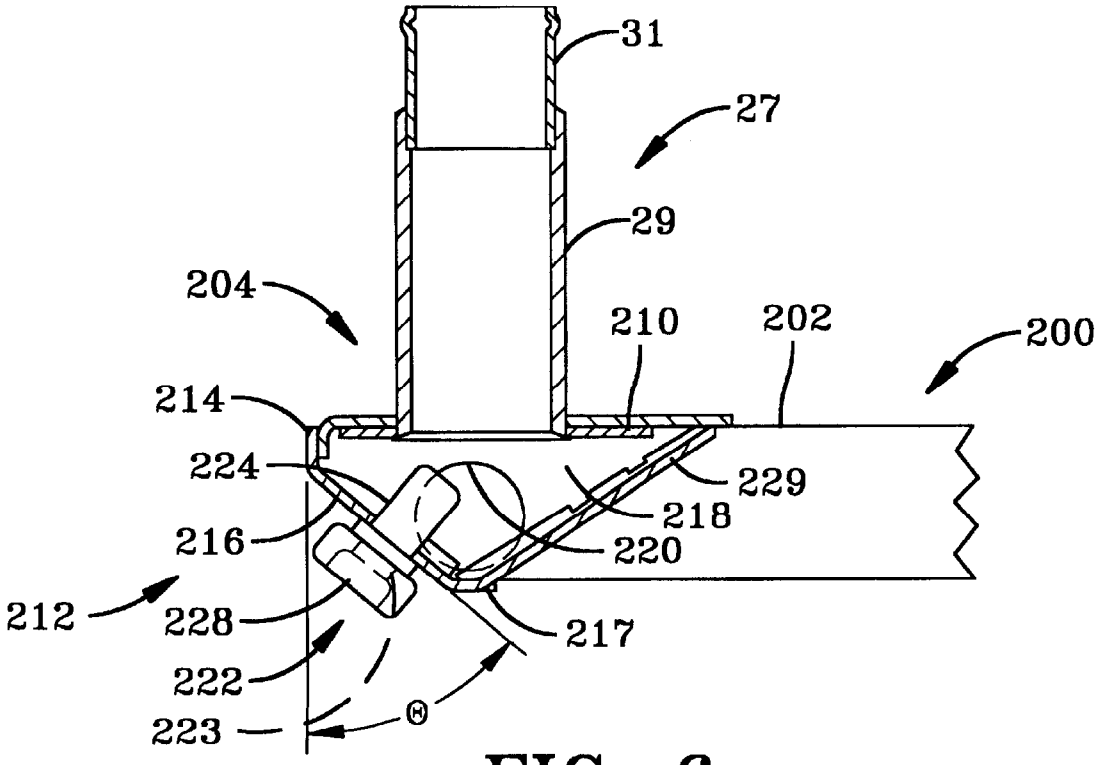

FIG–6

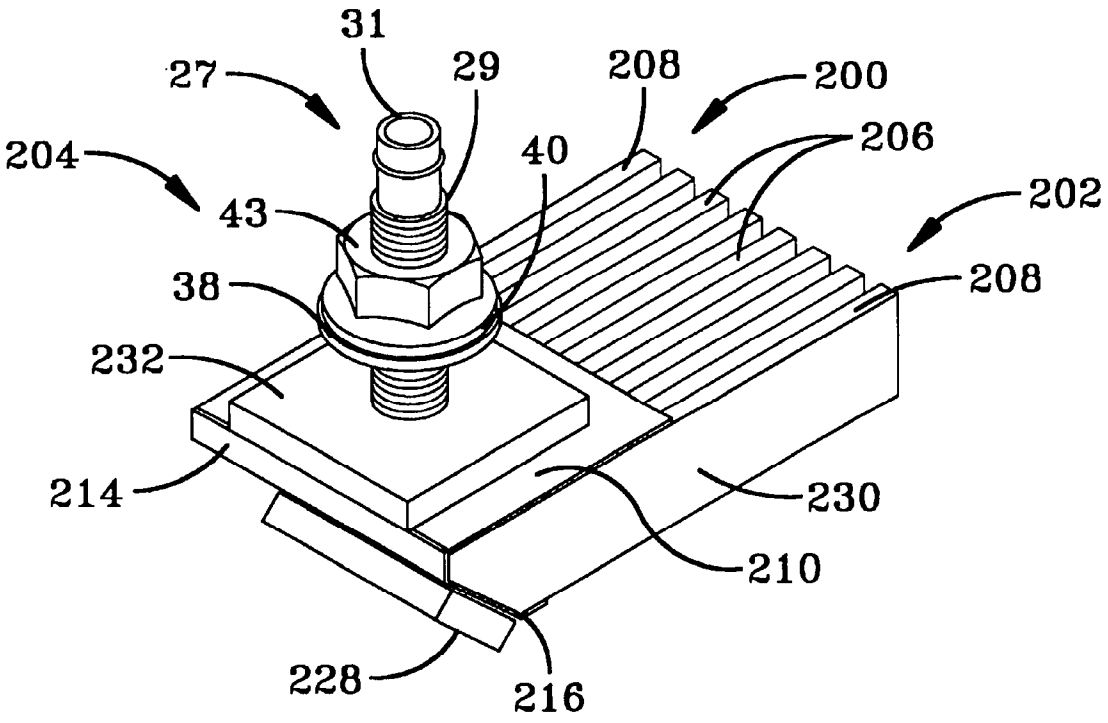
31
27
29
208
200
204
40
206
202
43
38
208
232
214
230
210
228
216

FIG-8

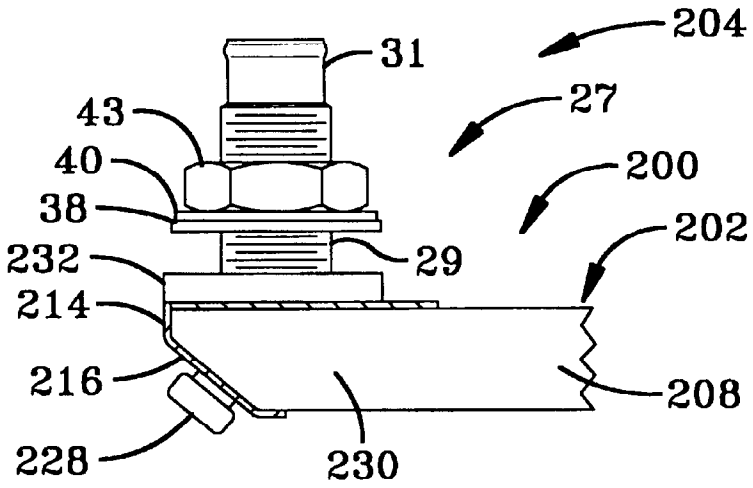
204
31
27
43
40
200
38
202
232
29
214
216
208
228
230

FIG-9

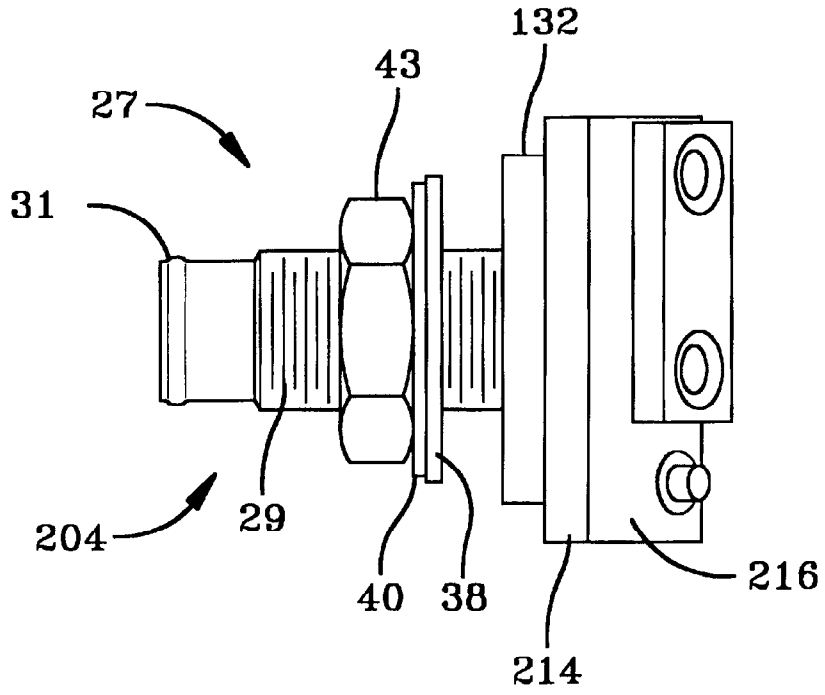
132
43
27
31
204
29
40
38
214
216

FIG-10

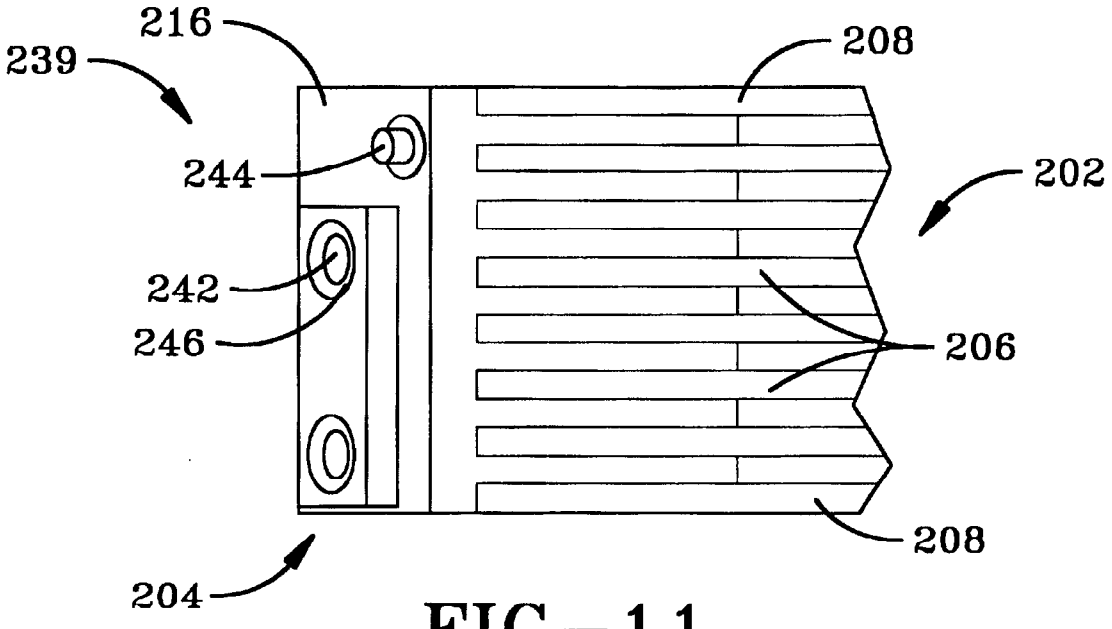
216
239
208
244
202
242
246
206
208
204

FIG-11

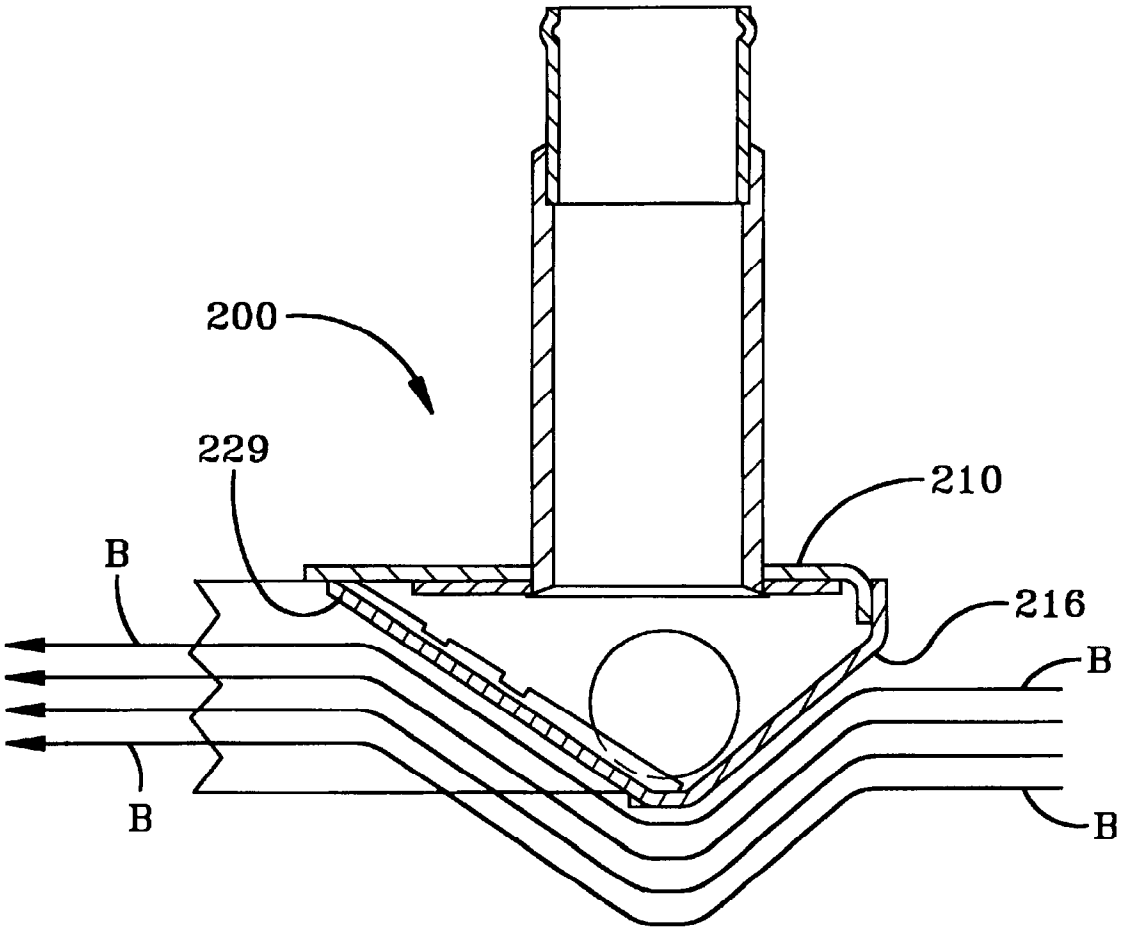

FIG-12

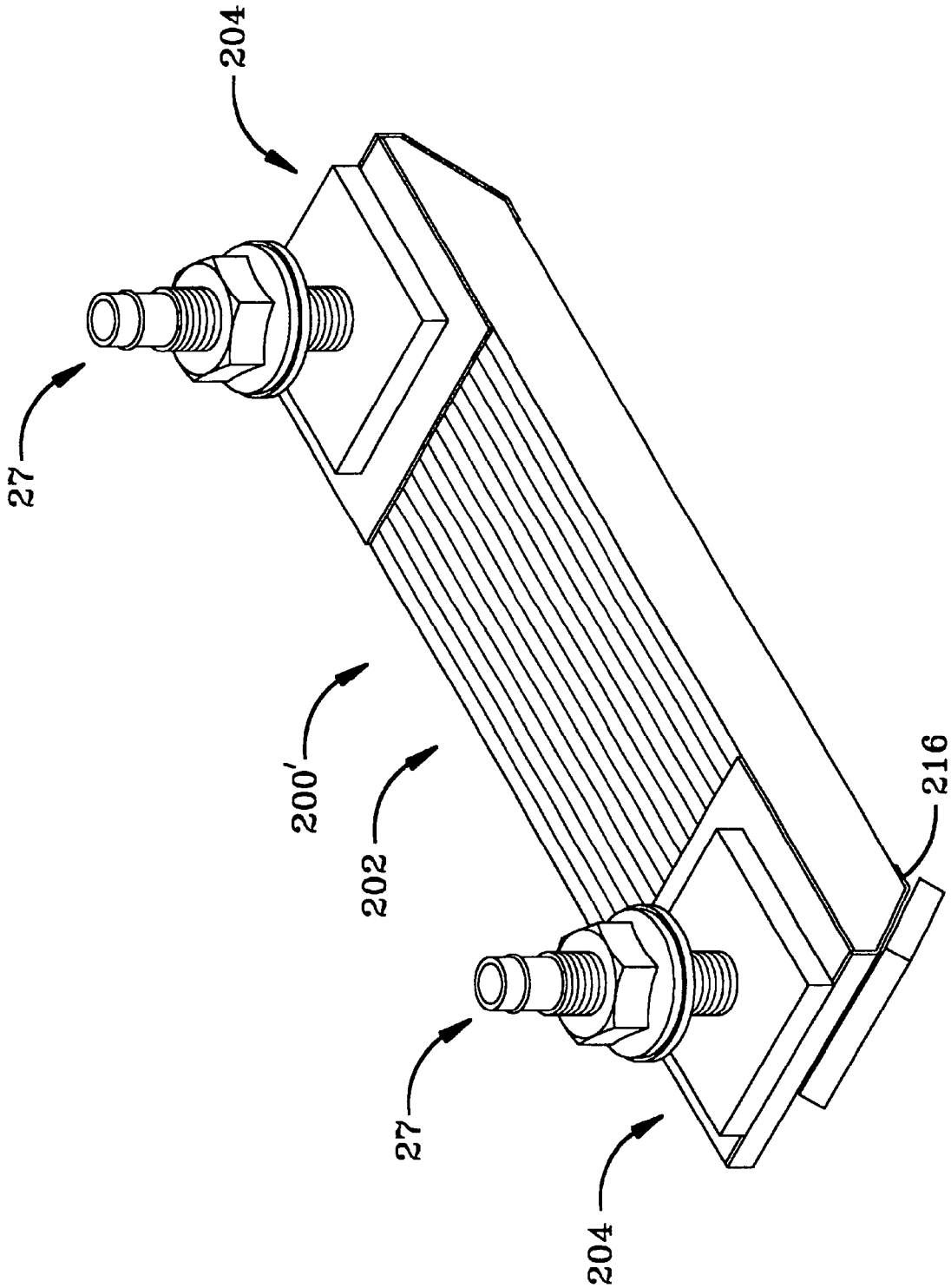

FIG-13

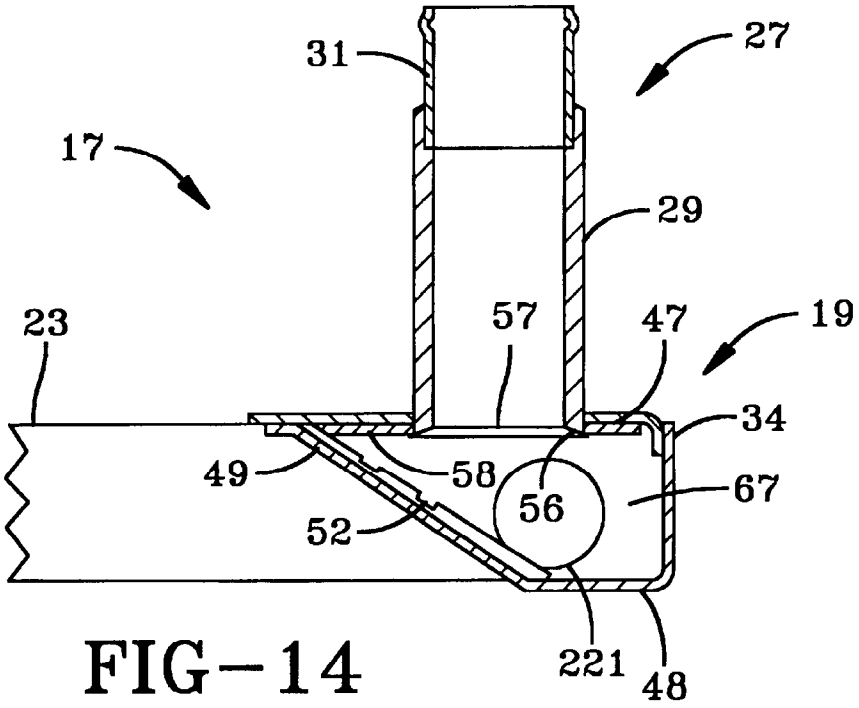
31
27
17
29
23
57
47
19
34
49
58
56
67
52
221
48

FIG-14

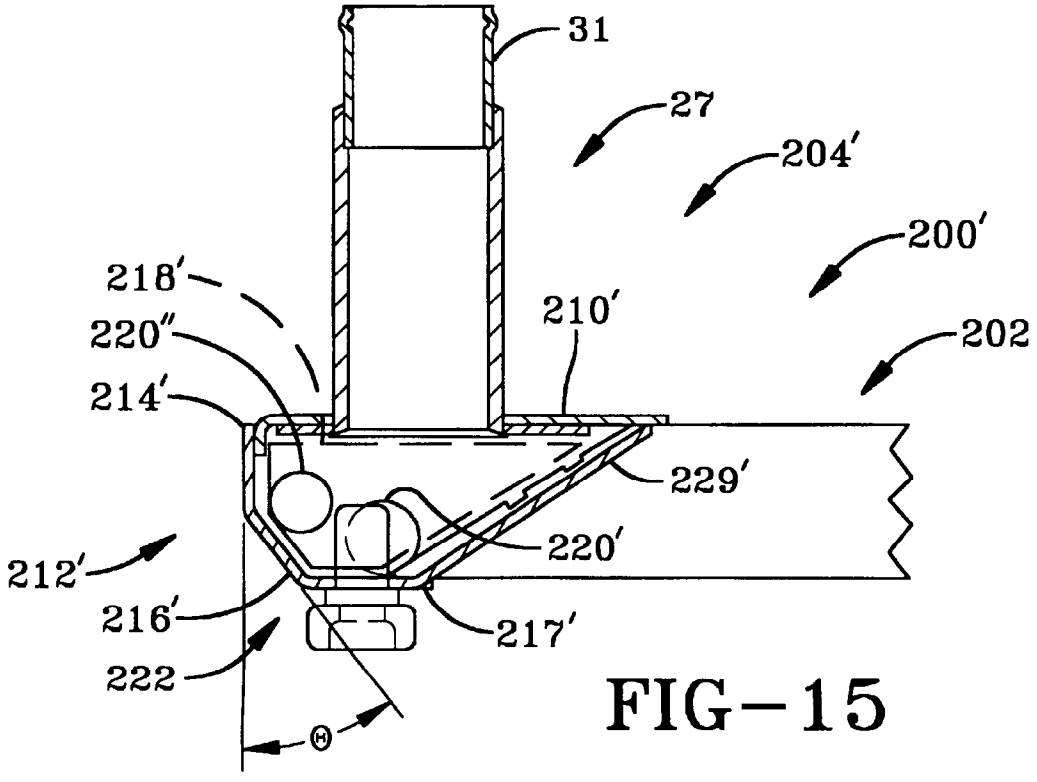
31
27
204'
200'
218'
210'
220"
202
214'
229'
220'
212'
216'
217'
222
Θ

FIG-15

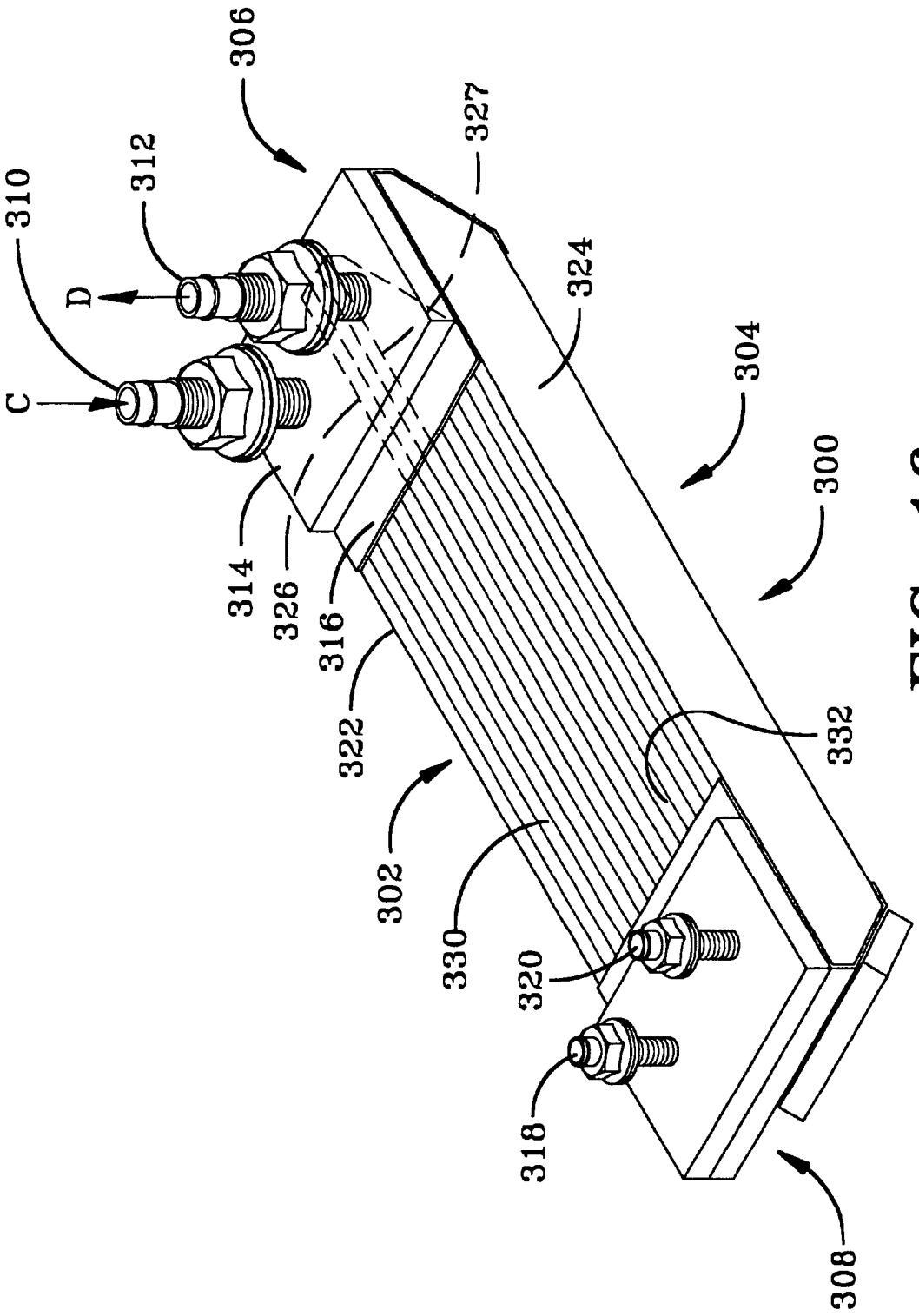
306
327
312
310
D
C
324
304
300
314
326
316
322
332
302
330
320
318
308

FIG-16

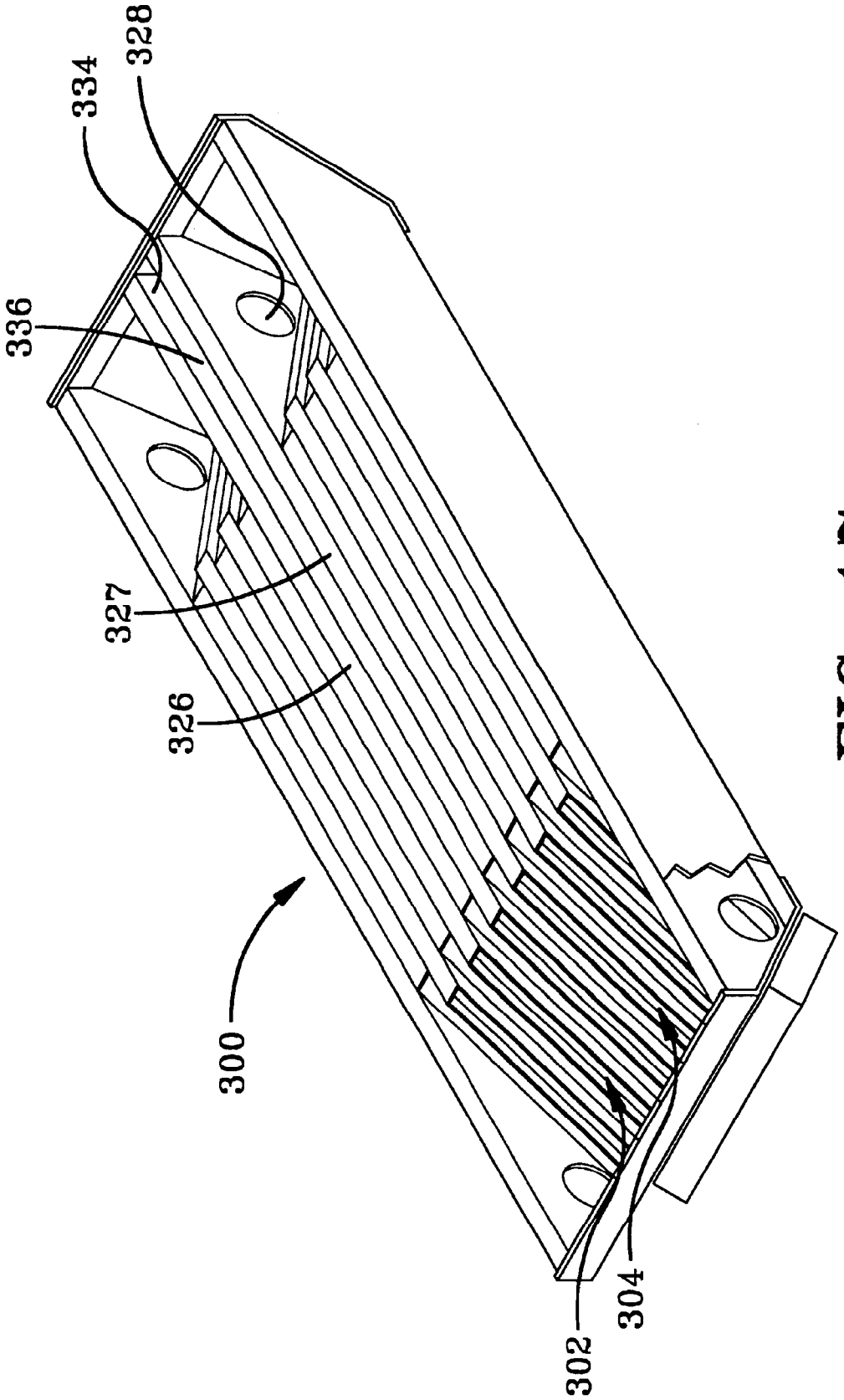

FIG-17

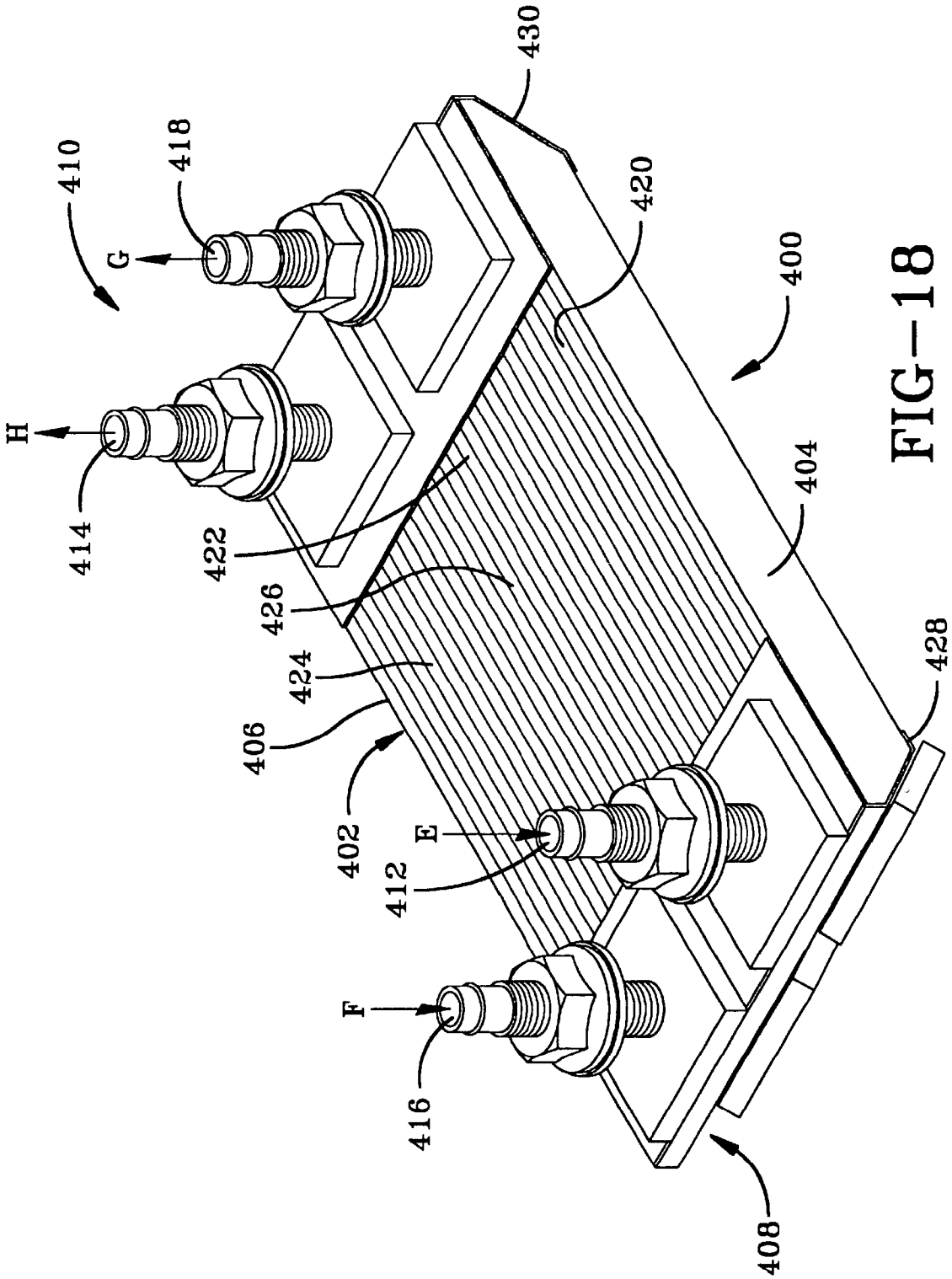
430
410
418
420
G
400
H
414
422
404
426
424
406
428
402
E
412
F
416
408

FIG-18

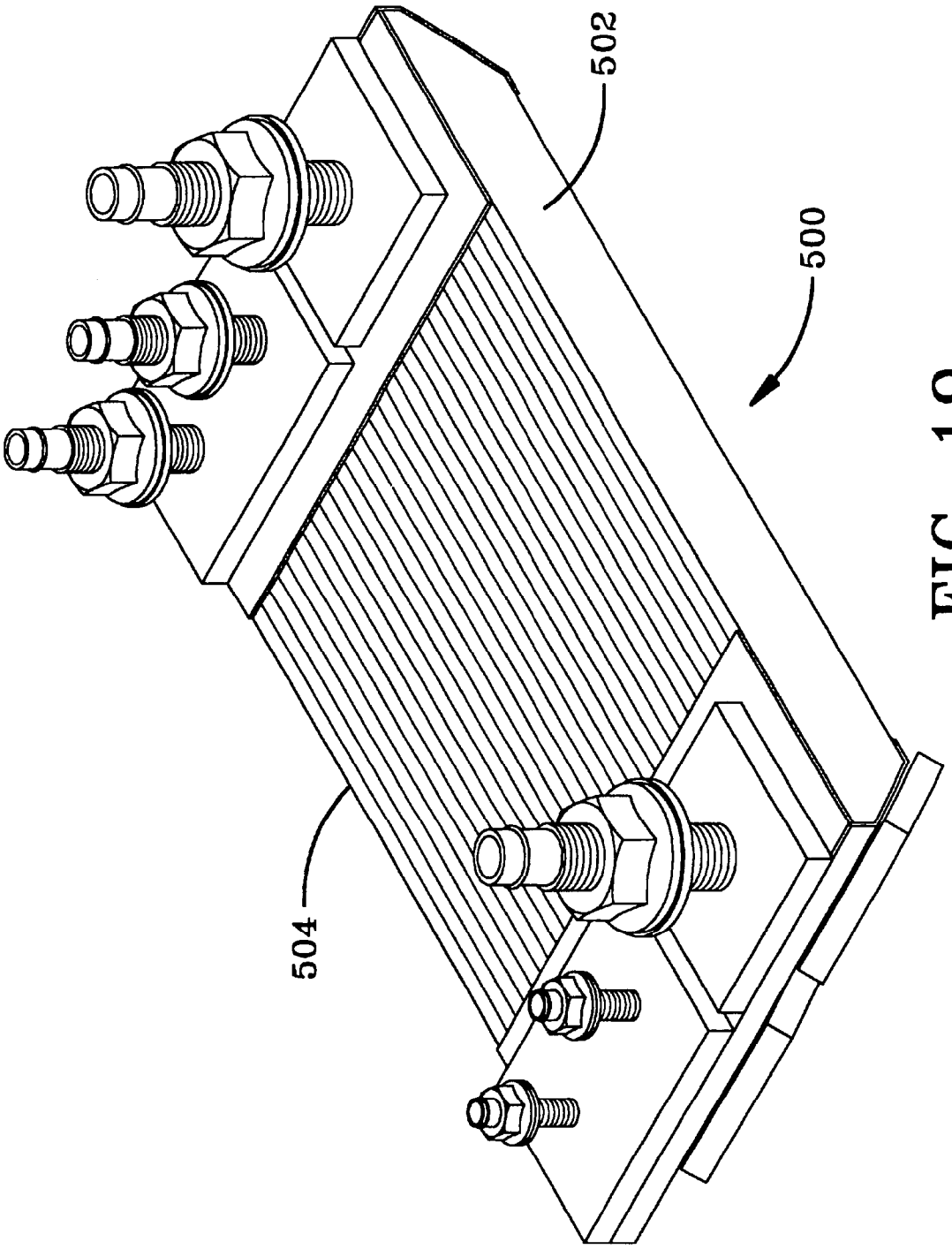

FIG-19

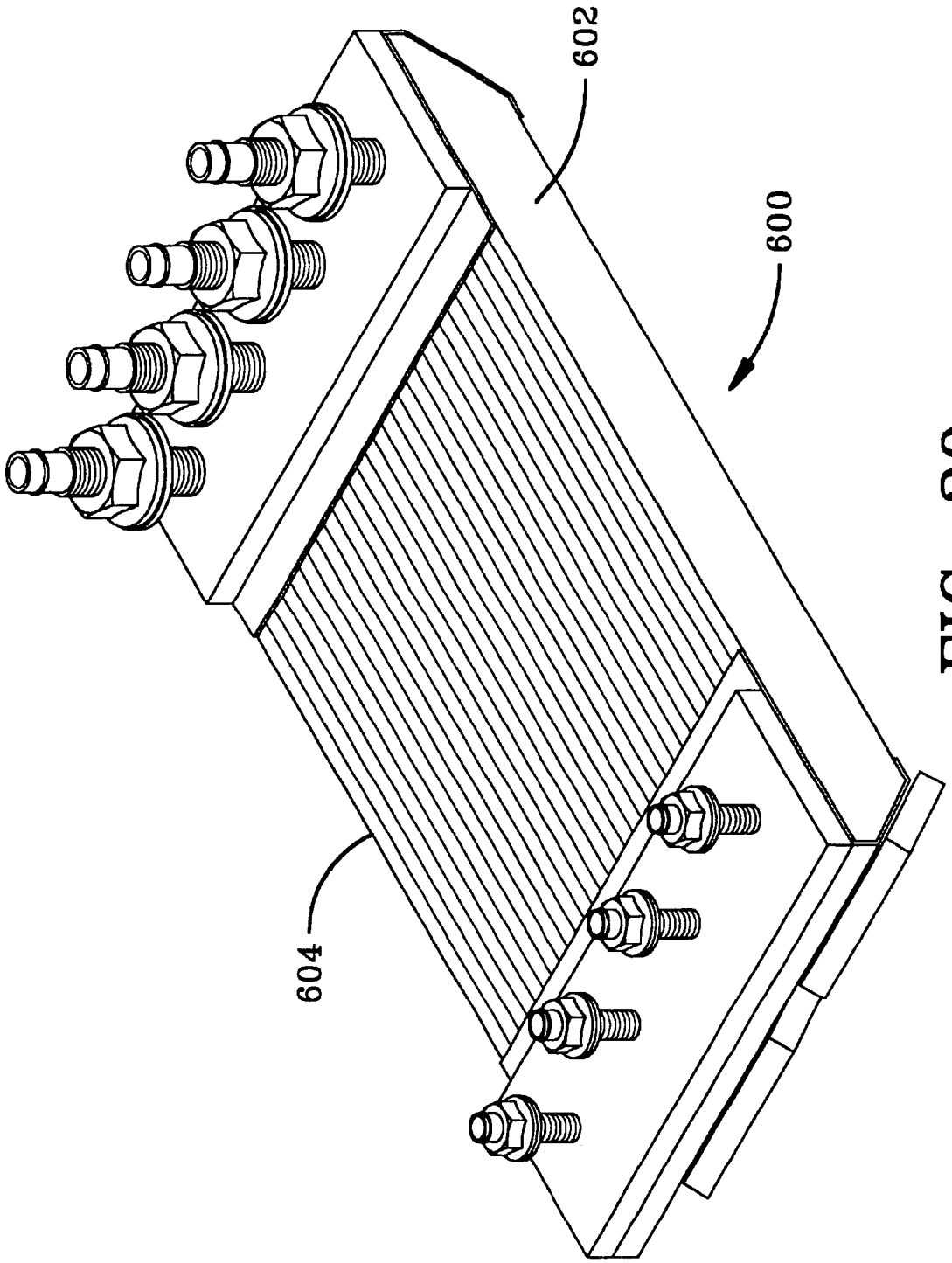

FIG-20

HEAT EXCHANGER

BACKGROUND OF THE INVENTION

1. Field of the Invention

This invention relates to heat exchangers, and more particularly to heat exchangers for cooling engines, generators, gear boxes and other heat generating sources in industrial apparatuses having fluid cooled heat sources, such as marine vessels. The invention more particularly relates to open heat exchangers (where heat transfer tubes are exposed to the ambient cooling or heating fluid, rather than being in a shell to shell container holding the cooling or heating fluid) used for cooling heat sources, where the heat exchangers are efficient, and thus have lower weight and volume compared to other heat exchangers known in the art. Alternatively, the heat exchanger according to the invention could be used as heater, wherein relatively cool fluid absorbs heat through the heat transfer tubes.

2. Description of the Prior Art

Heat generating sources in industrial applications such as marine vessels are often cooled by water, other fluids or water mixed with other fluids. For example, in marine vessels used in fresh water and/or salt water, the cooling fluid or coolant flows through the engine or other heat generating source where the coolant picks up heat, and then flows to another part of the plumbing circuit. The heat must be transferred from the coolant to the ambient surroundings, such as the body of water in which the vessel is located. For small engines, such as outboard motors for small boats, ambient water pumped through the engine is a sufficient coolant. However, as the vessel power demand gets larger, ambient water pumped through the engine may continue to provide good cooling of the engine, but also serves as a source of significant contamination damage to the engine. If raw, ambient water were used to cool the engine, the ambient water would carry debris and, particularly if it is salt water, corrosive chemicals to the engine. Therefore, there have been developed various apparatuses for cooling engines and other heat sources. One apparatus for cooling the engine of a vessel is channel steel, which is basically a large quantity of shaped steel which is welded to the bottom of the hull of a vessel for conveying engine coolant and transferring heat from the coolant to the ambient water. Channel steel has severe limitations: it is very inefficient, requiring a large amount of steel in order to obtain the required cooling effect; it is very expensive to attach to a vessel, since it must be welded to the hull—a very labor intensive operation; since channel steel is very heavy, the engine must be large enough to carry the channel steel, rendering both the initial equipment costs and the operating costs very high; the larger, more powerful engines of today are required to carry added channel steel for their cooling capacity with only a relatively small amount of room on the hull to carry it; the payload capacity is decreased; the large amount of channel steel is expensive; and finally, channel steel is inadequate for the present and future demands for cooling modem day, marine vessels. Even though channel steel is the most widely used heat exchanger for vessels, segments of the marine industry are abandoning channel steel and using smaller keel coolers for new construction to overcome the limitations cited earlier.

A keel cooler was developed in the 1940's and is described in U.S. Pat. No. 2,382,218 (Femstrum). The Femstrum patent describes a heat exchanger for attachment to a marine hull structure which is composed of a pair of spaced headers secured to the hull, and a plurality of heat conduction tubes, each of whose cross-section is rectangular, which extend between the headers. Cylindrical plumbing through the hull connects the headers to coolant flow lines extending from the engine or other heat source. Hot coolant leaves the engine, and runs into a heat exchanger header located beneath the water level (the water level refers to the water level preferably below the aerated water, i.e. below the level where foam and bubbles occur), either beneath the hull or on at least one of the lower sides of the hull. The coolant then flows through the respective rectangular heat conduction tubes and goes to the opposite header, from which the cooled coolant returns to the engine. The headers and the heat conduction tubes are disposed in the ambient water, and heat transferred from the coolant, travels through the walls of the heat conduction tubes and the headers, and into the ambient water. The rectangular tubes connecting the two headers are spaced fairly close to each other, to create a large heat flow surface area, while maintaining a relatively compact size and shape. Frequently, these keel coolers are disposed in recesses on the bottom of the hull of a vessel, and sometimes are mounted on the side of the vessel, but in all cases below the water line.

The foregoing keel cooler is referred to as a one-piece keel cooler, since it is an integral unit with its major components welded or brazed in place. The one-piece keel cooler is generally installed and removed in its entirety.

There are various varieties of one-piece keel coolers. Sometimes the keel cooler is a multiple-pass keel cooler where the headers and heat conduction tubes are arranged to allow at least one 180° change in the direction of flow, and the inlet and outlet ports may be located in the same header.

Even though the foregoing heat exchangers with the rectangular heat conduction tubes have enjoyed wide-spread use since their introduction over fifty years ago, they have shortcomings which are corrected by the present invention.

The rectangular heat exchangers of the prior art have the outward shape of a rectangular parallelepiped having headers at their opposite ends. These headers have opposing end walls which are perpendicular to the hull of the vessel and parallel to each other, and act as a barrier to ambient water flow relative to the keel cooler as the vessel with the heat exchanger travels through the water. The perpendicular header walls are responsible for the creation of dead spots (lack of ambient water flow) on the heat exchanger surfaces, which largely reduce the amount of heat transfer occurring at the dead spots. In addition, the perpendicular walls diminish the flow of ambient water between the heat conduction tubes, which reduces or diminishes the amount of heat which can be transferred between the coolant in the tubes and the ambient water.

The ability of a heat exchanger to efficiently transfer heat from a coolant flowing through heat conduction tubes depends, in part, on the volume of coolant which flows through the tubes and its distribution across the parallel set(s) of tubes, and on whether the coolant flow is turbulent or laminar. The volume flow of coolant per tube therefore impacts heat transfer efficiency and pressure drop across the heat exchanger. In the present heat exchanger with rectangular tubes, the ends or extensions of the outermost rectangular tubes form exterior walls of the respective headers. Coolant flowing through the heat exchanger, has limited access to the outermost tubes as determined from data obtained by the present inventors. At the present time, the outermost tubes have a solid outer wall, and a parallel inner wall. In order for coolant to flow into the outermost rectan-

gular tubes, orifices, most often circular in shape, are cut through the inner wall of each of the outer tubes for passing coolant into and out of the outer tubes. The inlet/outlet orifices of the exterior tubes are presently disposed centrally in a vertical direction and endwardly of the respective headers of the keel coolers. However, an analysis of the flow of coolant through the foregoing keel cooler shows that there is a larger amount of coolant per tube flowing through the more central tubes, and much less coolant per tube through the outermost tubes. A graph of the flow through the tubes has a general bell-shaped configuration, with the amount of flow decreasing from the central portion of the tube array. The result is that heat transfer is lower for the outermost tubes, and the overall heat transfer for the keel cooler is also relatively lower, and therefore, the pressure drop across the keel cooler is higher than desired.

The flow of coolant through the respective orifices into the outermost rectangular tubes was found to be inefficient, causing insufficient heat transfer in the outermost tubes. It was found that this occurred because the orifices were located higher and further towards the ends of the respective headers than is required for optimal flow. It has been found by the inventors that enlarging the orifice size and moving it closer to the natural flow path of the coolant flowing through the headers, i.e. its optimal path of flow, coupled with the modification to the design of the header as discussed below, further increased the flow to the outer tubes and made the flow through all of the tubes more uniform, reducing the pressure drop across the cooler while increasing the heat transfer.

The current keel cooler with rectangular heat conduction tubes has an anode and a drain plug or plugs located on the bottom portion of the respective headers, which increases the overall height of the header and which may render these devices subject to potential damage from debris in the water and underwater structures. In order to reduce the likelihood of damage, shrouds have been provided to protect the keel coolers against damage. In addition, the anode(s), and the drain plug(s), by projecting into the ambient water, impede the relative flow of the ambient water as the vessel moves therethrough which increases drag. As explained below, the location of the anode(s) and drain plug(s) so as to minimize the increase height of the header and the keel cooler, reduces the foregoing problems.

As discussed below, the beveled header, and the relocation of the anode assemblies and drain plugs, also contribute to the increase of the overall heat transfer efficiency of the keel cooler according to the invention, since the ambient water is caused to flow towards and between the respective heat conduction tubes, rendering the heat transfer substantially higher than in the keel cooler presently being used. This increase in heat transfer is due at least in part to the increase in turbulence in the flow of ambient water across the forward header and along and between the coolant flow tubes.

One of the important aspects of keel coolers for vessels is the requirement that they take up as small an area on the vessel as possible, while fulfilling or exceeding their heat exchange requirement with minimized pressure drops in coolant flow. The area on the vessel hull which is used to accommodate a keel cooler is referred to in the art as the footprint. In general, keel coolers with the smallest footprint and least internal pressure drops are desirable. One of the reasons that the keel cooler described above with the rectangular heat conduction tubes has become so popular, is because of the small footprint it requires when compared with other keel coolers. However, keel coolers according to the design of rectangular tubed keel coolers presently being used have been found by the present inventors to be larger than necessary both in terms of size and the related internal pressure drop. By the incorporation of the various aspects of the present invention described above (and in further detail below), keel coolers having smaller footprints and lower internal pressure drops are possible. These are major advantages of the present invention.

Some of the shortcomings of heat exchangers with rectangular heat conduction tubes presently being used relate to the imbalance in the coolant flow among the parallel tubes, in particular in keel coolers which lead to both excessive pressure drops and inferior heat transfer which can be improved according to the present invention. The unequal distribution of coolant flow through the heat conduction tubes in present rectangular tube systems has led to inferior heat transfer in the systems. In order to attend to this inferior heat transfer, the designers of the present keel coolers on the market have been compelled to enlarge or oversize the keel cooler which also may increase the footprint, through additional tube surface area, to overcome the poor coolant distribution and inferior heat transfer in the system. This has resulted in the present one piece keel coolers which are unnecessarily oversized when compared with the invention described below. In some instances, the invention described below would result in fewer keel coolers in cooling circuits which require multiple keel coolers.

The unequal distribution of coolant flow through the heat conduction tubes in present rectangular tube systems also results in higher internal pressure drops in the systems. This higher pressure drop is another reason that the prior art requires oversized heat exchangers. Excessive oversizing compensates for poor heat transfer efficiency and excessive pressure drops, but this requires added costs and a larger footprint.

When multiple pass (usually two pass) keel coolers are specified for the present state of the art, an even greater differential size is required when compared with the present invention, as described below.

SUMMARY OF THE INVENTION

It is an object of the present invention to provide a heat exchanger for fluid cooled heat sources which is smaller than corresponding heat exchangers having the same heat exchange capability.

Another object of the present invention is to provide an improved heat exchanger for industrial applications which is more efficient than heat exchangers presently known and used.

It is yet another object of the present invention to provide an improved one-piece heat exchanger for vessels which is more efficient in heat transfer than presently known one-piece heat exchangers.

It is an additional object to produce a one-piece heat exchanger and headers thereof which generally equalizes the flow of coolant through each of the tubes of the keel cooler.

A further object is to provide an improved one-piece heat exchanger which reduces the pressure drop of coolant flowing therethrough.

A further object of the present invention is to provide an improved one-piece heat exchanger having heat conduction tubes which are rectangular in cross-section having a length which is reduced in size from the current heat exchangers due to improved coolant flow distribution inside the heat exchanger and enhanced ambient water flow across the keel cooler.

gular tubes, orifices, most often circular in shape, are cut through the inner wall of each of the outer tubes for passing coolant into and out of the outer tubes. The inlet/outlet orifices of the exterior tubes are presently disposed centrally in a vertical direction and endwardly of the respective headers of the keel coolers. However, an analysis of the flow of coolant through the foregoing keel cooler shows that there is a larger amount of coolant per tube flowing through the more central tubes, and much less coolant per tube through the outermost tubes. A graph of the flow through the tubes has a general bell-shaped configuration, with the amount of flow decreasing from the central portion of the tube array. The result is that heat transfer is lower for the outermost tubes, and the overall heat transfer for the keel cooler is also relatively lower, and therefore, the pressure drop across the keel cooler is higher than desired.

The flow of coolant through the respective orifices into the outermost rectangular tubes was found to be inefficient, causing insufficient heat transfer in the outermost tubes. It was found that this occurred because the orifices were located higher and further towards the ends of the respective headers than is required for optimal flow. It has been found by the inventors that enlarging the orifice size and moving it closer to the natural flow path of the coolant flowing through the headers, i.e. its optimal path of flow, coupled with the modification to the design of the header as discussed below, further increased the flow to the outer tubes and made the flow through all of the tubes more uniform, reducing the pressure drop across the cooler while increasing the heat transfer.

The current keel cooler with rectangular heat conduction tubes has an anode and a drain plug or plugs located on the bottom portion of the respective headers, which increases the overall height of the header and which may render these devices subject to potential damage from debris in the water and underwater structures. In order to reduce the likelihood of damage, shrouds have been provided to protect the keel coolers against damage. In addition, the anode(s), and the drain plug(s), by projecting into the ambient water, impede the relative flow of the ambient water as the vessel moves therethrough which increases drag. As explained below, the location of the anode(s) and drain plug(s) so as to minimize the increase height of the header and the keel cooler, reduces the foregoing problems.

As discussed below, the beveled header, and the relocation of the anode assemblies and drain plugs, also contribute to the increase of the overall heat transfer efficiency of the keel cooler according to the invention, since the ambient water is caused to flow towards and between the respective heat conduction tubes, rendering the heat transfer substantially higher than in the keel cooler presently being used. This increase in heat transfer is due at least in part to the increase in turbulence in the flow of ambient water across the forward header and along and between the coolant flow tubes.

One of the important aspects of keel coolers for vessels is the requirement that they take up as small an area on the vessel as possible, while fulfilling or exceeding their heat exchange requirement with minimized pressure drops in coolant flow. The area on the vessel hull which is used to accommodate a keel cooler is referred to in the art as the footprint. In general, keel coolers with the smallest footprint and least internal pressure drops are desirable. One of the reasons that the keel cooler described above with the rectangular heat conduction tubes has become so popular, is because of the small footprint it requires when compared with other keel coolers. However, keel coolers according to the design of rectangular tubed keel coolers presently being used have been found by the present inventors to be larger than necessary both in terms of size and the related internal pressure drop. By the incorporation of the various aspects of the present invention described above (and in further detail below), keel coolers having smaller footprints and lower internal pressure drops are possible. These are major advantages of the present invention.

Some of the shortcomings of heat exchangers with rectangular heat conduction tubes presently being used relate to the imbalance in the coolant flow among the parallel tubes, in particular in keel coolers which lead to both excessive pressure drops and inferior heat transfer which can be improved according to the present invention. The unequal distribution of coolant flow through the heat conduction tubes in present rectangular tube systems has led to inferior heat transfer in the systems. In order to attend to this inferior heat transfer, the designers of the present keel coolers on the market have been compelled to enlarge or oversize the keel cooler which also may increase the footprint, through additional tube surface area, to overcome the poor coolant distribution and inferior heat transfer in the system. This has resulted in the present one piece keel coolers which are unnecessarily oversized when compared with the invention described below. In some instances, the invention described below would result in fewer keel coolers in cooling circuits which require multiple keel coolers.

The unequal distribution of coolant flow through the heat conduction tubes in present rectangular tube systems also results in higher internal pressure drops in the systems. This higher pressure drop is another reason that the prior art requires oversized heat exchangers. Excessive oversizing compensates for poor heat transfer efficiency and excessive pressure drops, but this requires added costs and a larger footprint.

When multiple pass (usually two pass) keel coolers are specified for the present state of the art, an even greater differential size is required when compared with the present invention, as described below.

SUMMARY OF THE INVENTION

It is an object of the present invention to provide a heat exchanger for fluid cooled heat sources which is smaller than corresponding heat exchangers having the same heat exchange capability.

Another object of the present invention is to provide an improved heat exchanger for industrial applications which is more efficient than heat exchangers presently known and used.

It is yet another object of the present invention to provide an improved one-piece heat exchanger for vessels which is more efficient in heat transfer than presently known one-piece heat exchangers.

It is an additional object to produce a one-piece heat exchanger and headers thereof which generally equalizes the flow of coolant through each of the tubes of the keel cooler.

A further object is to provide an improved one-piece heat exchanger which reduces the pressure drop of coolant flowing therethrough.

A further object of the present invention is to provide an improved one-piece heat exchanger having heat conduction tubes which are rectangular in cross-section having a length which is reduced in size from the current heat exchangers due to improved coolant flow distribution inside the heat exchanger and enhanced ambient water flow across the keel cooler.

Another object is to provide an improved one-piece heat exchanger having a reduced size from present one-piece heat exchangers of comparable heat transfer capability, by reducing the length of the heat transfer tubes, the number of tubes and/or the size of the tubes.

A still further object of the present invention is to provide a new one-piece heat exchanger having rectangular shaped heat conduction tubes which has enhanced durability compared to keel coolers presently on the market.

A related object of the invention is to provide an improved heat exchanger and headers thereof which is capable of deflecting debris more readily, and for presenting a smaller target to debris in the ambient water.

It is another object to provide a keel cooler and header thereof which projects into the water from the hull by a lesser amount than the corresponding one-piece keel coolers and headers thereof.

Another object of the present invention is to provide an improved one-piece keel cooler which is easier to install on vessels than corresponding keel coolers presently on the market.

It is still another object of the invention to provide a one-piece heat exchanger having a reduced pressure drop and a more uniform distribution of coolant flowing therethrough than heat exchangers presently on the market, for increasing the amount of coolant flowing through the heat exchanger to improve its capacity to transfer heat.

Yet a further object of the present invention is to provide a one-piece heat exchanger and a header having a lower weight, and therefore lower cost, than corresponding one-piece heat exchangers presently in use.

Another object of the present invention is to provide a one-piece heat exchanger and headers thereof having rectangular heat conduction tubes having a lower pressure drop in coolant flowing through the heat exchanger than corresponding heat exchangers presently known.

Another object of the present invention is the provision of a one-piece heat exchanger for a vessel, for use as a retrofit for previously installed one-piece heat exchangers which will surpass the overall heat transfer performance and provide lower pressure drops than the prior units without requiring additional plumbing, or requiring additional space requirements, to accommodate a greater heat output.

It is another object of the invention to provide an improved header for a one-piece heat exchanger having rectangular coolant flow tubes.

Another object is to provide an improved header for a one-piece heat exchanger with rectangular coolant flow tubes which reduces the dead spots which have heretofore reduced the heat transfer capabilities of one-piece heat exchangers, the dead spots reducing the flow of ambient water around and between the coolant flow tubes.

A further object of the invention is to provide an improved header for a one-piece keel cooler with rectangular coolant flow tubes, by reducing the likelihood of damage to the header from striking debris and underwater objects which could damage the keel cooler.

It is still another object for the provision of a header for effecting increased turbulent flow of the ambient water flowing between and around the heat transfer tubes.

It is an additional object to provide an improved header for one-piece keel coolers which enables the anode for such keel coolers to be less likely to strike debris and underwater objects.

Another object is the provision of a keel cooler having a smaller, and more streamlined profile to reduce drag as the vessel with the keel cooler moves through the ambient water.

Another object is to provide a header for a one-piece heat exchanger which provides for enhanced heat exchange between the coolant and the ambient cooling medium such as water.

Yet a further object is to provide a header for a one-piece heat exchanger which provides for more uniform flow of coolant through all tubes of the keel cooler, to improve the heat transfer as compared to equivalent, current headers.

A general object of the present invention is to provide a one-piece heat exchanger and headers thereof which is efficient and effective in manufacture and use.

Other objects will become apparent from the description to follow and from the appended claims.

The invention to which this application is directed is a one-piece heat exchanger, i.e. heat exchangers having two headers which are integral with coolant flow tubes. It is particularly applicable to heat exchangers used on marine vessels as discussed earlier, which in that context are also called keel coolers. However, heat exchangers according to the present invention can also be used for cooling heat generating sources (or heating cool or cold fluid) in other situations such as industrial and scientific equipment, and therefore the term heat exchangers covers the broader description of the product discussed herein. The heat exchanger includes two headers, and one or more coolant flow tubes integral with the header.

BRIEF DESCRIPTION OF THE DRAWINGS

FIG. **1** is a schematic view of a heat exchanger on a vessel in the water.

FIG. **2** is a side view of an engine for a vessel having a one-piece keel cooler according to the prior art installed on the vessel and connected to the engine;

FIG. **3** is a pictorial view of a keel cooler according to the prior art;

FIG. **4** is a partial pictorial view of a partially cut-away header and a portion of the coolant flow tubes of a one-piece keel cooler according to the prior art;

FIG. **5** is a cross-sectional view of a portion of a keel cooler according to the prior art, showing a header and part of the coolant flow tubes;

FIG. **6** is a side, cross-sectional, partial view of a portion of one-piece keel cooler according to the invention, showing a header and part of the coolant flow tubes;

FIG. **7** is a pictorial view of a portion of a one-piece keel cooler according to the invention, with portions cut away;

FIG. **8** is a pictorial view of a header and part of the coolant flow tubes of a one-piece keel cooler according to the invention;

FIG. **9** is a side view of part of the apparatus shown in FIG. **8**;

FIG. **10** is a front view of the apparatus shown in FIG. **8**;

FIG. **11** is a partial bottom view of the apparatus shown in FIG. **8**;

FIG. **12** is a side view of a portion of a header according to the invention showing the flow lines of ambient water;

FIG. **13** is a pictorial view of a keel cooler according to the invention;

FIG. **14** is a cross-sectional view of a portion of a keel cooler substantially according to the prior art, but the orifice for the flow of coolant between the header and the outermost coolant flow tube, is constructed according to the invention;

FIG. **15** is a cross-sectional view of a portion of a keel cooler, having several variations of the orifice(s) for the flow

of coolant between the header and the outermost coolant flow tube, according to an aspect of the invention;

FIG. **16** is a pictorial view of a two pass keel cooler system according to the invention;

FIG. **17** is a cut away view of a portion of the header shown in FIG. **16**;

FIG. **18** is a pictorial view of a multiple systems combined, having two single pass portions, according to the invention;

FIG. **19** is a pictorial view of a keel cooler according to the invention, having a single pass portion and a double pass portion; and

FIG. **20** is pictorial view of two double pass systems according to the invention;

DESCRIPTION OF THE PREFERRED EMBODIMENTS

The fundamental components of a heat exchanger system for a water going vessel are shown in FIG. **1**. The system includes a heat source **1**, a heat exchanger **3**, a pipe **5** for conveying the hot coolant from heat source **1** to heat exchanger **3**, and a pipe **7** for conveying cooled coolant from heat exchanger **3** to heat source **1**. Heat source **1** could be an engine, a generator or other heat source for the vessel. Heat exchanger **3** could be a one-piece keel cooler (since only one-piece keel coolers are discussed herein, they are generally only referred to herein as "keel coolers.") Heat exchanger **3** is located in the ambient water, below the water line (i.e. below the aerated water line), and heat from the hot coolant is transferred through the walls of heat exchanger **3** and expelled into the cooler ambient water.

FIG. **2** shows a heat exchanger **11** mounted on a vessel, for transferring heat from the coolant flowing from an engine or other heat source **13** to the ambient water. Coolant flows from one of lines **14** or **15** from engine **13** to keel cooler **11**, and back through the other flow pipe from keel cooler **11** to engine **13**. Keel cooler **11** is attached to, but spaced from the hull of vessel.

A keel cooler **17** according to the prior art is shown in FIG. **3**. It includes a pair of headers **19, 21** at opposite ends of a set of parallel, rectangular heat conductor tubes **23**, having interior tubes **25** and two exterior tubes (discussed below). A pair of nozzles **27, 28** conduct coolant into and out of keel cooler **17**. Nozzles **27, 28** have cylindrical threaded connectors **29, 30**, and nipples **31, 32** at the ends of the nozzles. Headers **19, 21** have a generally prismatic construction, and their ends **34, 35** are perpendicular to the parallel planes in which the upper and lower surfaces of tubes **23** are located. Keel cooler **17** is connected to the hull of a vessel through which nozzles **27** and **28** extend. Large gaskets **36, 37** each have one side against headers **19, 21** respectively, and the other side engages the hull of the vessel. Rubber washers **38, 39** are disposed on the inside of the hull when keel cooler **17** is installed on a vessel, and metal washers **40, 41** sit on rubber washers **38, 39**. Nuts **42, 43**, which typically are made from metal compatible with the nozzle, screw down on sets of threads **44, 45** on connectors **29, 30** to tighten the gaskets and rubber washers against the hull to hold keel cooler **17** in place and seal the hull penetrations from leaks

Turning to FIG. **4**, a partial, cross section of the current keel cooler according to the prior art and depicted in FIG. **3**, is shown. Keel cooler **17** is composed of the set of parallel heat conduction or coolant flow tubes **23** and the header or manifold **19**. Nozzle **27** is connected to header **19** as described below. Nozzle **27** has nipple **31**, and connector **29** has threads **44** as described above, as well as washer **40** and nut **42**. Nipple **31** of nozzle **27** is normally brazed or welded inside of a connector **29** which extends inside the hull. Header **19** has an upper wall or roof **47**, outer back wall **34**, and a bottom wall or floor **48**. Header **19** includes a series of fingers **52** which are inclined with respect to tubes **23**, and define spaces to receive ends **55** of interior tubes **25**.

Referring also to FIG. **5**, which shows keel cooler **17** and header **19** in cross section, header **19** further includes an inclined surface or wall **49** composed of fingers **52**. End portions **55** of interior tubes **25** extend through surface **49**. Interior tubes **25** are brazed or welded to fingers **52** to form a continuous surface. A flange **56** surrounds an inside orifice **57** through which nozzle **27** extends and is provided for helping support nozzle **27** in a perpendicular position on the header **19**. Flange **56** engages a reinforcement plate **58** on the underside of wall **47**.

In the discussion above and to follow, the terms "upper", "inner", "downward", "end" etc. refer to the heat exchanger, keel cooler or header as viewed in a horizontal position as shown in FIG. **5**. This is done realizing that these units, such as when used on water going vessels, can be mounted on the side of the vessel, or inclined on the fore or aft end of the hull, or various other positions.

Each exterior side wall of header **19** is comprised of an exterior or outer rectangular tube, one of which is indicated by numeral **60** in FIG. **4**. The outer tubes extend into header **19**. FIGS. **4** and **5** show both sides of outside tube wall **61**. Both sides of interior wall **65** are shown in FIGS. **4** and **5**. A circular orifice **69** is shown extending through interior wall **65** of the outside rectangular tube of keel cooler **17**, and is provided for carrying coolant flowing through the outside tube into or out of header **19**. In this regard, nozzle **27** can either be an inlet conduit for receiving hot coolant from the engine whose flow is indicated by the arrow A in FIG. **5**, but also could be an outlet conduit for receiving cooled coolant from header **19** for circulation back to the heat source. It is important to note that in the prior art, the location and size of orifice **69** limits the amount of flow which can pass through orifice **69**. More particularly, the orifice has heretofore been mounted too high, is too small, and too far away from the natural flow path of the coolant, resulting in reduced flow through the outer rectangular tubes, non-uniform coolant flow through tubes **23**, and a disadvantageously high pressure drop as the coolant flows through the orifices, and at higher rates through the less restricted inner tubes—even though the outermost tubes have the greatest ability to transfer heat.

FIG. **4** also shows that keel cooler header **19** has a drainage orifice **71** for receiving a correspondingly threaded and removable plug. The contents of keel cooler **17** can be removed through orifice **71**.

Orifice **57** is separated by a fairly large distance from the location of orifice **69**, resulting in a reduced amount of flow through each orifice **69**, the reduction in flow being largely due to the absence of the orifice in the natural flow path of the coolant. Although this problem has existed for five decades, it was only when the inventors of the present invention were able to analyze the full, flow characteristics that they verified the importance of properly locating and sizing the orifice. In addition, the configuration of the header in both single pass and multiple pass systems affects the flow through the header as discussed below.

Still referring to the prior art header **19** shown in FIGS. **3–5**, it can be seen that outer back wall **34** and floor **48** are

formed at right angles. This configuration has led to a number of disadvantages, previously unrecognized by those designing and working on keel coolers. First, by having wall **34** perpendicular to the direction of flow of the coolant through the tubes, greater pressure drops occur inside of header **19** as the coolant becomes chaotically turbulent and is forced through the coolant flow tubes at varying flow rates depending on resistance. This coupled with the poor location and size of orifice **69** leads to a net reduction in flow and thus of heat transferred from the coolant through outer tubes **60** of keel cooler **17**. With respect to the outside of wall **34**, the vertical wall acts as an obstruction to the flow of ambient water, and diminishes the amount of ambient water which is able to flow between and around tubes **23**. In addition, vertical wall **34** serves as an obstruction to debris in the ambient water and absorbs the full impact of the debris leading to potential damage to the keel cooler. Moreover, having wall **34** and floor **48** defining a right angle increases the amount of material used for keel cooler **17**, which adds to its expense. Most keel coolers are made from 90-10 copper-nickel (or some other material having a large amount of copper), which is a relatively expensive material. In addition, significant drag is created by the resistance which the vertical wall presents to ambient water, as well as the protruding anode(s) and drain plug(s) (discussed below) mounted on floor **48**. This restricts the flow of ambient water to the heat exchange tubes of the keel cooler, increases the required depth of the keel cooler which may increase the likelihood of it being hit by debris, as well as lowering the depth of the vessel and increasing the probability of damage by underlying structures, and adds to the drag of the vessel as it moves through the water.

Still referring to FIGS. **3–5**, gaskets **36, 37** are provided for three essential purposes: (1) they insulate the header to prevent galvanic corrosion, (2) they eliminate infiltration of ambient water into the vessel, and (3) they permit heat transfer in the space between the keel cooler tubes and the vessel by creating a distance of separation between the heat exchanger and the vessel hull, allowing ambient water to flow through that space. Gaskets **36, 37** are generally made from a polymeric substance. In typical situations, gaskets **36, 37** are between one quarter inch and three quarter inches thick. Keel cooler **17** is installed on a vessel as explained above. The plumbing from the vessel is attached by means of hoses to nipple **31** and connector **29** and to nipple **32** and connector **30**. A cofferdam or sea chest (part of the vessel) at each end (not shown) contains both the portion of the nozzle **27** and nut **42** directly inside the hull. Sea chests are provided to prevent the flow of ambient water into the vessel should the keel cooler be severely damaged or torn away, where ambient water would otherwise flow with little restriction into the vessel at the penetration location.

Referring next to FIGS. **6–11**, the invention in the preferred embodiment is shown. The embodiment includes a keel cooler **200** with coolant flow tubes (or heat transfer fluid flow tubes, since in some instances the fluid may be heated instead of cooled) **202** having a generally rectangular cross section. A header **204** is an integral part of keel cooler **200**. Tubes **202** include interior or inner coolant flow tubes **206** and outermost or exterior tubes **208**. A nozzle **27** having nipple **31** and threaded connector **29**, are the same as those described earlier and are attached to the header. Header **204** includes an upper wall or roof **210**, a beveled closed end portion **212** having an end wall **214** transverse to (and preferably perpendicular to) upper wall **210** and a beveled, bottom wall **216** beginning at end wall **214** and terminating at a generally flat lower wall **217**. Beveled wall **216** should be greater in length (from end wall **214** to lower wall **217**) than the height of end wall **214**. An interior wall **218** (FIGS. **6–7**) of exterior or outermost rectangular flow tube **208** has an orifice **220** (one per header for each tube **208**) which is provided as a coolant flow port for coolant flowing between the chamber of header **204** and outer flow tubes **208** (The chamber is defined by upper wall **210**, an inclined surface or inner end or inlet end portion **229**, beveled bottom wall **216**, lower wall **217** and end wall **214**). Header **204** also has an anode assembly **222** (shown in FIG. **6**) for reducing corrosion of the keel cooler.

Anode assembly **222** includes a steel anode plug(s) **223** which is connected to an anode insert(s) **224** which is part of header **204**, an anode mounting screw(s) **242**, a lockwasher(s) **246** (FIG. **11**) and anode bar **228**, which is normally made of zinc. The anode insert, the anode plug and the anode bar have not changed from the prior art, but were omitted from FIGS. **3** and **4** for the sake of clarity. However, the location of the anode assembly has changed as explained below.

Considering specifically cut away FIG. **7**, keel cooler **200** includes rectangular tubes **202** with interior tubes **206** and outermost tubes **208**, and inner wall **218** (with orifice **220**) of the outermost tubes. The open ends or inlets or ports for interior tubes **206** are shown by numerals **227**. Tubes **206** join header **204** through inclined surface **229** (FIG. **6**) on the opposite part of header **204** from beveled wall **216**. Exterior tubes **208** have outer walls **230**, part of which are also the side walls of header **204**. A gasket **232**, similar to and for the same purpose as gasket **36**, is disposed on roof **210**.

An important part of the present invention is the beveled closed end portion **212**. Beveled closed end portion **212**, with beveled bottom wall **216**, provides a number of important advantages to the keel cooler. First, being beveled as shown, it enhances the continuous flow of coolant either from heat conduction tubes **202** into nozzle **27**, where nozzle **27** is an outlet nozzle, or from nozzle **27** into tubes **202**, where nozzle **27** is an inlet nozzle. When nozzle **27** is an inlet, beveled wall **216** in cooperation with the angled surface **229** acts to direct the flow of coolant into orifice **220** and openings **227**, i.e. beveled wall **216** directs the natural flow of coolant from the nozzle **27** to orifices **220** and tube openings **227**. It can be seen that the beveled end portion **212** either distributes the coolant more uniformly across inlets **227** to each of tubes **202** (including orifices **220** in interior wall **218** of exterior tubes **208**, or from tubes **202** for discharge of coolant into nozzle **27** where nozzle **27** is an outlet nozzle). The increased coolant flow in the outermost tubes results in improved coolant flow distribution among all the tubes, which provides a lower pressure drop across the entire system and greater heat transfer between the coolant, through tubes **202** and through the walls of header **204**, and the ambient water. For example, for a keel cooler having eight rectangular tubes whose external dimensions are 2½ inches in height and ½ inch in width, and the keel cooler is mounted on a vessel with a 2 knot speed, the coolant flow to the outer tubes increased by about 35% over the flow under corresponding heat exchange conditions using the prior art heat exchanger of the same size (i.e. the numbers of tubes and lengths of the tubes) as shown in FIGS. **3–5**, which had poor flow distribution. In addition, the heat transferred by the exterior tubes increased by 45% over the corresponding heat transfer under corresponding conditions using the prior art keel cooler shown in FIGS. **3–5**. The total heat transfer of the entire system increased by about 17% in a particular instance over the corresponding unit of FIGS. **3–5**. As explained below, the improvement over the prior art is

expected to be even greater for two pass systems. Also, as discussed later, the deficiencies of the prior art for higher coolant flows, are not experienced to the same extent by the keel cooler according to the invention.

The angle of beveled wall **216** is an important part of the present invention. As discussed herein, the angle, designated as θ (theta), is appropriately measured from the plane perpendicular to the longitudinal direction of coolant flow tubes **202** and located at the part of the closed end portion of header **204** spaced furthest from the set of open ends or ports **227** of tubes **206**, i.e. from end wall **214**, to beveled wall **216**. Angle θ is described as an exterior angle, since it is exterior to end wall **214** and beveled bottom wall **216**; it is measured from a plane perpendicular to the longitudinal axes of the flow tubes **202** and roof **210**, and it is along end wall **214** at the beginning of beveled bottom wall **216**. The factors for determining angle θ are to maintain the center to center distance of the nozzle spacing, to maintain the overall length of the keel cooler, to provide vertical drop beneath the roof of the header so that the header can hold the anode insert, to keep the anode assembly from extending longitudinally beyond wall **214**, and to allow for the maximum length of heat transfer tubing (and the associated reduction of the length of the header). Angle θ could be affected by the size of orifice **220**, but generally the other factors limit angle θ before the orifice would affect it.

Another important aspect to beveled wall **216** is the manner in which it directs the flow of ambient water over and between the exterior walls of coolant flow tubes **202**, to increase the heat transfer between the coolant inside the tubes and the outside ambient water. It will be recalled that under the prior art as shown in FIGS. **3–5**, vertical wall **34** diverted the ambient water as the vessel passed therethrough, so that the ambient water to a significant extent went around rather than between and over the separated rectangular tubes **27**.

It is desirable not to increase the depth of a keel cooler any more than necessary, to make it less likely to strike debris in the water, and less likely to strike underwater objects or the ground beneath the vessel, i.e. the bottom. For this reason, anode assembly **222** is preferably mounted on beveled wall **216**. As shown in FIGS. **6** and **11**, anode bar **228** of anode assembly **222** is attached to beveled wall **216**, by anode screws **242** which extend through lockwashers **246** and into anode insert **224**. Anode insert **224** extends from wall **216** into header **204**. This decreases the depth of anode assembly according to the prior art, under which anode assembly **222** would have extended from lower wall **217**.

As shown most clearly in FIGS. **10** and **11**, drain plug **244** is also preferably located on beveled wall **216** to avoid plug **244** from striking debris in the water or hitting bottom. More importantly, the drain plug and anode located on the beveled surface have less interference with the ambient water flow pattern (FIG. **12**, arrows B). Drain plug **244** extends into a drain plug insert which is part of the header. Under the prior art, drain plug **244** would otherwise have extended from lower wall **217**.

Referring to FIG. **12**, which shows a side view of keel cooler **200**, arrows B show the flow pattern of ambient water across keel cooler **200** as the keel cooler moves to the right through the ambient water. Arrows B show that the water impinges on beveled wall **216**, flows around the beveled wall, and, due to the drop in pressure, along inclined surface **229** and up and between coolant flow tubes **202**. This flow is turbulent which greatly increases the transfer of heat from the heat conduction tubes as compared to the prior art shown in FIGS. **3–5**, yielding a more efficient and effective heat exchanger than those of the prior art. Additionally, having drain plug **244** and anode bar **228** on beveled wall **216** causes less interference with the ambient water flow pattern shown by arrows B. They contribute to the improved heat transfer efficiency.

Keel coolers according to the invention are used as they have been in the prior art, and incorporate two headers which are connected by an array of parallel coolant flow tubes. A common keel cooler according to the invention is shown in FIG. **13**, which illustrates a keel cooler **200'** having opposing headers **204** like the one shown in FIG. **7**. The headers shown have the identical numbers to those shown in FIG. **7**. Heated coolant fluid flows into one nozzle **27** from a heat source in the vessel, then flows through one header **204**, the coolant flow tubes **202**, the other header **204**, the other nozzle **27**, and the cooled coolant flows back to the heat source in the vessel. While flowing through headers **204** and coolant flow tubes **202**, the coolant transfers heat to the ambient water. All of the advantages of the beveled wall **216** apply to keel cooler **200'**.

As mentioned above, the size of orifice **220** is an important part of the new keel cooler and the new header. It is desirable to have the orifice be sufficiently large to not impede the amount of coolant flow to exterior heat conduction tubes **208** of the keel cooler, and to implement a balanced flow near the juncture of beveled wall **216** and the interior of surface **229** and ports **227**. It has been found that a distance of about ⅛ of an inch between orifice **220** and walls adjacent its lower edge (the interior of the lower parts of wall **216**, wall **217** and surface **229**, as shown in FIG. **6**) be provided for manufacturing tolerance as it is fabricated, which is advantageously done by drilling or cutting orifice **220** into wall **218**. It is important that the coolant flow into exterior tubes **208** be near the bottom of walls **218**, rather than closer to their top. The distance between the top of orifice **220** and roof **210** is not as crucial. The proper size and placement of orifice **220** thus reduces the pressure drop of the coolant in the entire system of keel cooler **200**, balances the flow among the multiple tubes, and thus increases the heat transfer through the outer tubes and therefore the entire unit.

While the embodiment under discussion is a beveled keel cooler, the size and location of the orifice to the outermost tubes in a one-piece keel cooler according the prior art as shown in FIGS. **3–5** is significantly improved according to the present invention. FIG. **14** shows a keel cooler header and an outermost coolant flow tube much as was shown in FIG. **5** (and corresponding parts have corresponding numbers), except that orifice **69** has been replaced by orifice **221**. Orifice **221** has been moved closer to the openings of the inner coolant flow tubes, has been moved lower, and its size has been increased significantly, so that it is as large as possible within the area permitted on wall **67**. Relocated and enlarged orifice **221** enables more coolant fluid to flow into the outermost coolant flow tubes (or from it if the flow were to proceed out of nozzle **27**). As explained in the preceding paragraph, the use of orifice **221** reduces the pressure drop of the coolant and balances the flow of coolant amongst the coolant flow tubes, thus increasing heat transfer for the keel cooler (or other heat exchanger).

As a practical matter, it has been found that a circular orifice having a diameter as large as possible while maintaining the orifice in its wall within the header provides the desired coolant flow into the outermost tubes while enabling the proper amount of flow into the inner tubes as well. More than one orifice can also be provided, as shown in FIG. **15**,

where all of the members have the same numerical designators shown in FIGS. **6–12**, except that some have a prime (') designation since angle θ has been changed to 40°, wall **214'** is larger than wall **214**, beveled wall **216'** is shorter than wall **216** and the configuration of wall **218'** has been modified from wall **218**. Orifice **220** has been replaced by two orifices **220'** and **220"**. Also, the anode assembly **222** and drain plug have been moved to a lower wall **217'** of header **204'**. Tubes **202** have also been moved along with the change in header **204'**.

The orifice has been shown as one or more circular orifices, since circular orifices are relatively easy to provide. However, non-circular orifices are also within the scope of the invention, and a length of wall **218** could be dispensed with (as shown at **218'** in FIG. **15**).

The importance of the size and location of orifice **220** has other advantages as well. So far, only single pass keel cooler systems have been described. The problems with the size and location of the orifice to the outside tubes may be magnified for multiple pass systems and for multiple systems combined, as explained below. In two pass systems, the inlet and outlet nozzles are both disposed in one header, and coolant flows into the header via an inlet nozzle, through a first set of tubes from the first header into the second header (with no nozzles), and then back through a second set of tubes at a lower pressure—and finally out from the header via an outlet nozzle. Referring to FIGS. **16** and **17**, a two pass keel cooler **300** according to the invention is shown. Keel cooler **300** has two sets of coolant flow tubes **302, 304**, a header **306** and an opposite header **308**. Header **306** has an inlet nozzle **310** and an outlet nozzle **312**, which extend through a gasket **314**. Gasket(s) **314** is located on roof **316** of header **306**. The other header **308** has no nozzles, but rather has one or two stud bolt assemblies **318, 320** for connecting the portion of the keel cooler which includes header **308** to the hull of the vessel. The hot coolant from the engine or generator of the vessel enters nozzle **310** as shown by arrow C, and the cooled coolant returns to the engine from header **306** through outlet nozzle **312** shown by the arrow D. Outer tubes **322, 324** are like outer tubes **208** in FIGS. **7, 8** and **11** in that orifices corresponding to orifice **220** directs coolant into tube **322** and from tube **324**. In addition, a tube **326** serves as a separator tube for delivering inlet coolant from header **306** to header **308**, and it has an orifice (not shown) for receiving coolant for separator tube **326** under high pressure from a part of header **306** as discussed below. Similarly, a tube **327** which is the return separator tube for carrying coolant from header **308**, also has an orifice **328** in header **306**.

For space limitations or assembly considerations, sometimes (as noted above) it is necessary to remove the inner wall or a section of the inner tube instead of one or the other of the orifices. Other times, a separator plate is used and the standard angle interior tubes are used instead of separator tubes.

Keel cooler **300** has one set of coolant flow tubes **302** for carrying hot coolant from header **306** to header **308**, where the direction of coolant flow is turned 180° by header **308**, and the coolant enters a second set of tubes **304** for returning the partially cooled coolant back to header **306**. Thus, coolant under high pressure flows through tubes **302** from header **306** to header **308**, and the coolant then returns through tubes **304**, and subsequently through nozzle **312** to the engine or other heat source of the vessel. Walls **334** and **336** (shown in FIG. **17**) of tubes **326** and **327** in header **306** are solid, and act as separators to prevent the mixing of the hot coolant going into coolant flow tubes **302**, and the cooled coolant flowing from tubes **304**. There is a fairly uniform rate of flow through the tubes in both directions. Such efficient systems have been unable to be produced under the prior art, since the pressure drop across all six (or as many as would be realistically considered) orifices made the prior keel coolers too inefficient due to poor coolant distribution to be operated without a substantial additional safety factor. That is, in order to have two pass systems, prior one piece keel cooler systems having two pass arrangements are up to 20% larger than those required pursuant to the present invention to provide sufficient heat exchange surfaces to remove the required amount of heat from the coolant while attempting to maintain acceptable pressure drops.

The keel cooler system shown in FIG. **16** has 8 flow tubes. However, the two pass system would be appropriate for any even number of tubes, especially for those above two tubes. There are presently keel coolers having as many as 24 tubes, but it is possible according to the present invention for the number of tubes to be increased even further. These can also be keel coolers with more than two passes. If the number of passes is even, both nozzles are located in the same header. If the number of passes is an odd number, there is one nozzle located in each header.

Another aspect of the present invention is shown in FIG. **18**, which shows a multiple systems combined keel cooler which has heretofore not been practically possible with one-piece keel coolers. Multiple systems combined can be used for cooling two or more heat sources, such as two relatively small engines or an after cooler and a gear box in a single vessel. Although the embodiment shown in FIG. **18** shows two keel cooler systems, there could be additional ones as well, depending on the situation. As explained below, the present invention allows multiple systems to be far more efficient than they could have been in the past. Thus, FIG. **18** shows a multiple systems keel cooler **400**. Keel cooler **400** has a set of heat conducting or coolant flow tubes **402** having outer tubes **404** and **406**, which have orifices at their respective inner walls which are similar in size and position to those shown in the previously described embodiments of the invention. For two single pass, multiple systems combined, keel cooler **400** has identical headers **408** and **410**, having inlet nozzles **412, 416** respectively, and outlet nozzles **414, 418** respectively. Both nozzles in respective headers **408** and **410** could be reversed with respect to the direction of flow in them, or one could be an inlet and the other could be an outlet nozzle for the respective headers. The direction of the coolant flow through the nozzles are shown respectively by arrows E, F, G and H. A set of tubes **420** for conducting coolant between nozzles **412** and **418** commence with outer tube **404** and terminate with separator tube **422**, and a set of tubes **424** extending between nozzles **414** and **416**, commencing with outer tube **406** and terminating with separator tube **426**. The walls of tubes **422** and **426** which are adjacent to each other are solid, and extend between the end walls of headers **408** and **410**. These walls thus form system separators, which prevent the flow of coolant across these walls, so that the tubes **420** form, in effect, one keel cooler, and tubes **424** form, in effect, a second keel cooler (along with their respective headers). Keel cooler **400** has beveled closed end portions **428, 430** as discussed earlier. This type of keel cooler can be more economical than having two separate keel coolers, since there is a savings by only requiring two headers, rather than four. Multiple keel coolers can be combined in various combinations. There can be two or more one pass systems as shown in FIG. **18**.

There can be one or more single pass systems and one or more double pass systems in combination as shown in FIG.

19. In FIG. 19, a keel cooler 500 is depicted having a single pass keel cooler portion 502, and a double pass keel cooler portion 504. Keel cooler portion 502 functions as that described with reference to FIGS. 6–11, and keel cooler portion 504 functions as that described with reference to FIGS. 16 and 17. FIG. 19 shows a double pass system for one heat exchanger, and additional double pass systems could be added as well.

FIG. 20, shows a keel cooler 600 having 2 double pass keel cooler portions 602, 604, which can be identical or have different capacities. They each function as described above with respect to FIGS. 16 and 17. Multiple coolers combined is a powerful feature not found in prior one-piece keel coolers. The modification of the special separator/tube design improves heat transfer and flow distribution while minimizing pressure drop concerns.

The keel coolers described above show nozzles for transferring heat transfer fluid into or out of the keel cooler. However, there are other means for transferring fluid into or out of the keel cooler; for example, in flange mounted keel coolers, there are one or more conduits such as pipes extending from the hull and from the keel cooler having end flanges for connection together to establish a heat transfer fluid flow path. Normally a gasket is interposed between the flanges. There may be other means for connecting the keel cooler to the coolant plumbing system in the vessel. This invention is independent of the type of connection used to join the keel cooler to the coolant plumbing system.

The invention has been described with particular reference to the preferred embodiments thereof, but it should be understood that variations and modifications within the spirit and scope of the invention may occur to those skilled in the art to which the invention pertains.

What is claimed is:

1. A header for a heat exchanger, the heat exchanger having a plurality of parallel tubes extending in a longitudinal direction and having generally rectangular cross sections, the tubes including a pair of outermost tubes and at least one inner tube located between the outermost tubes, the outermost tubes having an outside wall and a parallel inside wall, and the inner tubes having coolant ports, said header comprising:

an upper wall having an upper end portion, opposing side portions and an upper inner portion, said upper end portion and said upper inner portion being located in a plane, and an inlet/outlet opening for permitting the flow of coolant between an inlet/outlet and said header, said upper wall having a length extending between said upper end portion and said upper inner portion;

a lower wall located below said upper wall, said lower wall having a lower end portion, opposing side portions and a lower inner portion, said lower wall having a length extending between the lower end portion and the lower inner portion, said length being less than the length of said upper wall and disposed inwardly from both the upper end portion and the upper inner portion of said upper wall;

an end wall extending transversely from the end portion of said upper wall and terminating below said upper wall and above said lower wall;

an inclined surface extending between the inner portions of said lower wall and said upper wall, and including the open end(s) of the at least one inner tube to said header;

outside side walls extending between the side portions of said upper wall and said lower wall, said outside side walls each being an extension of the outside wall of the outermost tube of the heat exchanger;

inside side walls parallel to said outside side walls, said inside side walls each being an extension of the inside wall of the outermost tube; and

a beveled wall extending between the termination of said end wall and the end portion of said lower wall and beveled with respect to said longitudinal direction from said upper wall to said lower wall towards said tube to reduce the turbulence of coolant flow to and/or from said parallel tubes and increase ambient fluid flow to the exterior surfaces of said parallel tubes compared to a non-beveled wall;

the inner surfaces of said inside side walls, upper wall, end wall, bottom wall, beveled wall and inclined surface forming a header chamber;

said inside side walls each having an orifice for permitting the flow of coolant between said header chamber and the respective outermost tube;

said orifice being disposed at least partly over said inclined surface when viewed in a transverse direction with respect to the longitudinal direction and at least partly beneath said inlet/outlet opening.

2. A header according to claim 1 wherein said orifice is a circular orifice.

3. A header according to claim 1 wherein said orifice is a circular orifice generally tangent to said bottom wall.

4. A header according to claim 1 wherein said orifice is a circular orifice whose size is the maximum size that will fit on said inner wall in said header chamber.

5. A header according to claim 1 wherein the parallel tubes have an internal cross sectional area, and wherein said orifice has an area of at least 1½ times the internal cross sectional area of each of the parallel tubes.

6. A header according to claim 5 wherein the area of said orifice is about twice the area of each of the parallel tubes.

7. A header according to claim 1 wherein the side walls having said orifice have an internal cross sectional area, and wherein said orifice has an area of at least 1½ times the internal cross sectional area.

8. A header according to claim 1 wherein said orifice has an area substantially as large as the largest circular orifice which will fit in said side walls at the location of said orifice.

9. A header according to claim 1 wherein said orifice is one of a plurality of orifices.

10. A header according to claim 1 wherein each of said orifices covers substantially the respective inside side walls.

11. A header according to claim 1 and further including an anode assembly located on said beveled wall.

12. A header according to claim 11 wherein said beveled wall has an interior side and an exterior side, and wherein said anode assembly has an anode bar located on the exterior side of said beveled wall, and said anode bar does not extend beyond said end wall.

13. A header according to claim 1 and further including a drain assembly including a drain hole located in said beveled wall, and a drain plug locatable in said drain hole, said drain plug extending outwardly from said beveled wall.

14. A header according to claim 13 wherein said drain plug does not extend below said lower wall.

15. A one-piece heat exchanger comprising:

a plurality of coolant flow tubes extending in a longitudinal direction for carrying coolant fluid and for transferring heat from the coolant fluid to a fluid heat sink, said coolant flow tubes having inner tubes and exterior side tubes, said inner tubes having at least one set of open ends in proximity to each other; and

a header connected to said coolant flow tubes at said set of open ends of said tubes, said header having an inlet end portion for receiving coolant from and/or delivering coolant to said coolant flow tubes through said open ends, a generally flat upper wall having an opening for the flow of coolant into and/or out of said header, a closed end portion opposite said inlet end portion having an end wall transverse to said upper wall and a beveled bottom wall having a beveled portion terminating in a generally flat bottom wall generally parallel to said upper wall, said beveled portion being beveled with respect to said longitudinal direction of said coolant flow tubes to reduce the turbulence of coolant flow to and/or from said coolant flow tubes and increase ambient fluid flow to the exterior surfaces of said coolant flow tubes compared to a non-beveled inlet end portion, and side walls comprising extensions of said exterior side tubes, each of said side walls including an outermost wall and an inner wall, said inner wall having an orifice for the flow of coolant between said header and said exterior tube of which said inner wall is an extension, said orifice being disposed at least partly over said inlet end portion and at least partly beneath said opening as viewed in a transverse direction with respect to the longitudinal direction, said beveled portion serving to direct internal coolant flow to and/or from said orifices.

16. A one-piece heat exchanger according to claim **15** wherein said orifice has an area substantially as large as the largest circular orifice which will fit in said side walls at the location of said orifice.

17. A one-piece heat exchanger according to claim **15** wherein said orifice is one of a plurality of orifices for the flow of coolant between said header and said exterior tube of which said inner wall is an extension.

18. A one-piece heat exchanger according to claim **15** wherein each of said orifices covers substantially the respective inside side walls.

19. A one-piece heat exchanger according to claim **15** and further including an anode assembly located on said beveled portion of said beveled bottom wall.

20. A one-piece heat exchanger according to claim **19** wherein said beveled portion has an interior side and an exterior side, and wherein said anode assembly has an anode bar located on the exterior side of said beveled portion, and said anode bar does not extend beyond said end wall.

21. A one-piece heat exchanger according to claim **15** and further including a drain assembly including a drain hole located on said beveled portion of said beveled bottom wall, and a drain plug locatable in said drain hole, said drain plug extending outwardly from said beveled portion.

22. A one-piece heat exchanger according to claim **21** wherein said drain plug does not extend below said flat bottom wall.

* * * * *

IN THE UNITED STATES PATENT AND TRADEMARK OFFICE
BEFORE THE TRADEMARK TRIAL AND APPEAL BOARD

04 JUL 30 PM 11:08

DURAMAX MARINE, LLC ,	)	
	)	
Opposer,	)	
	)	
v.	)	Opposition No. 119,899
	)	
R.W. FERNSTRUM & COMPANY,	)	
	)	
Applicant.	)	

APPLICANT'S FIRST NOTICE OF RELIANCE UNDER TRADEMARK RULE 2.120(j)

Applicant hereby notifies Opposer of its reliance on Opposer's Answers To Applicant's First Set Of Requests For Admission in accordance with Trademark Rule 2.120(j)(3)(i). Specifically, Applicant relies on Opposer's response to Requests for Admission Nos. 1, 2, 6 – 12, 15, 18 – 24, 28 – 32, 35, and 37 – 40.[1]

R. W. FERNSTRUM & COMPANY

Date: July 26, 2004

Marc A Bergsman

Samuel D. Littlepage, Esq.
Marc A. Bergsman, Esq.
Dickinson Wright PLLC
1901 L Street, N.W., Suite 800
Washington, D.C. 20036
(202) 659-6944
Mbergsman@dickinsonwright.com

Attorneys for Applicant

---

[1] Also attached is a copy of Applicant's Request For Admission No. 2 which references the Settlement Agreement and Mutual Release between R.W. Fernstrum & Company, East Park Radiator & Battery Shop, Inc. and Duramax, Inc. The Agreement is attached as Exhibit A. Opposer was asked to authenticate the document.

Certificate Of Service

I hereby certify that one copy of Applicant's First Notice Of Reliance Under Trademark Rule 2.120(j) was mailed by first class mail, postage prepaid, this 30th day of July, 2004, to:

D. Peter Hochberg, Esq.
D. Peter Hochberg Co., L.P.A.
The Baker Building, Sixth Floor
1940 East Sixth Street
Cleveland, Ohio 44114

Regina Marti

DC 71119-37 85839

Attorney Docket DX-3 (#90545)

IN THE UNITED STATES PATENT AND TRADEMARK OFFICE
BEFORE THE TRADEMARK TRIAL AND APPEAL BOARD

In the Matter of:

Application Serial No. 75/701,707
Mark: Drawing of a Marine Heat Exchanger
Published in the Official Gazette at Page TM 400 on May 9, 2000

DURAMAX MARINE, LLC	)	
	)	
Opposer,	)	
	)	
v.	)	Opposition No. 119,899
	)	
R.W. FERNSTRUM & COMPANY,	)	
	)	
Applicant	)	

Box TTAB – No Fee
Commissioner for Trademarks
2900 Crystal Drive
Arlington, VA 22202-3513

OPPOSER'S ANSWERS TO APPLICANT'S FIRST SET OF REQUESTS FOR ADMISSIONS

REQUEST NO. 1:

Duramax Marine, L.L.C. is bound by the Settlement and Mutual Release Agreement executed by R.W. Fernstrum & Company, East Park Radiator & Battery Shop, Inc., Donovan Marine, Inc., and Duramax, Inc.

ANSWER:

Admitted.

REQUEST NO. 2:

Exhibit A is a true and accurate copy of the Settlement and Mutual Release Agreement executed by R.W. Fernstrum & Company, East Park Radiator & Battery Shop, Inc., Donovan Marine, Inc., and Duramax, Inc.

ANSWER:

Admitted.

REQUEST NO. 6:

The purpose of the Settlement and Mutual Release Agreement executed by R.W. Fernstrum & Company, East Park Radiator & Battery Shop, Inc., Donovan Marine, Inc., and Duramax, Inc. was to settle the claims asserted in the three civil actions.

ANSWER:

Admitted.

REQUEST NO. 7:

East Park Radiator & Battery Shop, Inc. v. R.W. Fernstrum & Company, Civil Action No. 97-3598 on the docket of the Section "S" of the United States District Court for the Eastern District of Louisiana was one of the civil actions referenced in the Settlement and Mutual Release Agreement executed by R.W. Fernstrum & Company, East Park Radiator & Battery Shop, Inc., Donovan Marine, Inc., and Duramax, Inc.

ANSWER:

Admitted.

REQUEST NO. 8:

R.W. Fernstrum & Company v. East Park Radiator & Battery Shop, Inc., Civil Action No. 97-3597 on the docket of the Section "S" of the United States District Court for the Eastern District of Louisiana was one of the civil actions referenced in the Settlement and Mutual Release Agreement executed by R.W. Fernstrum & Company, East Park Radiator & Battery Shop, Inc., Donovan Marine, Inc., and Duramax, Inc.

ANSWER:

Admitted; however the action should be identified as Civil Action No. 97-3657.

REQUEST NO. 9:

Donovan Marine, Inc., v. R.W. Fernstrum & Company, Civil Action No. 97-3794 on the docket of the Section "S" of the United States District Court for the Eastern District of Louisiana was one of the civil actions referenced in the Settlement and Mutual Release Agreement executed by R.W. Fernstrum & Company, East Park Radiator & Battery Shop, Inc., Donovan Marine, Inc., and Duramax, Inc.

ANSWER:

Admitted; however the action should be identified as Civil Action No. 97-3974.

REQUEST NO. 10:

East Park Radiator & Battery Shop, Inc. v. R.W. Fernstrum & Company, Civil Action No. 97-3598, *R.W. Fernstrum & Company v. East Park Radiator & Battery Shop, Inc.*, Civil Action No. 97-3597, and *Donovan Marine, Inc. v. R.W. Fernstrum & Company*, Civil Action No. 97-3794 were consolidated for trial in the United States District Court for the Eastern District of Louisiana.

ANSWER:

Admitted, so long as the second and third references are numbered Civil Action Nos. 97-3657 and 97-3974 respectively.

REQUEST NO. 11:

East Park Radiator & Battery Shop, Inc. v. R.W. Fernstrum & Company, civil action No. 97-3598, *R.W. Fernstrum & Company v. East Park Radiator & Battery Shop, Inc.*, Civil Action No. 97-3697, and *Donovan Marine, Inc. v. R.W. Fernstrum & Company*, Civil Action No. 97-3794 are jointly referred to as the "Litigation" in the Settlement and Mutual Release Agreement executed by R.W. Fernstrum & Company, East Park Radiator & Battery Shop, Inc., Donovan Marine, Inc., and Duramax, Inc.

ANSWER:

Admitted; however, the actions should be identified as Civil Action Nos. 97-3657 and 97-3974 respectively.

REQUEST NO. 12:

In paragraph No. 17 of the Settlement and Mutual Release Agreement executed by R.W. Fernstrum & Company, East Park Radiator & Battery Shop, Inc., Donovan Marine, Inc., and Duramax, Inc., Duramax, Inc. agreed not to sue and to release, waive and discharge R.W. Fernstrum & Company from any liability, claims or causes of action of whatsoever kind arising out of the facts and/or claims asserted or which could have been asserted by R.W. Fernstrum, Donovan Marine, Inc. and East Park Radiator & Battery Shop, Inc. in the "Litigation".

ANSWER:

Admitted.

REQUEST NO.15:

R.W. Fernstrum & Company v. East Park Radiator & Battery Shop, Inc., Civil Action No. 97-3657, R.W. Fernstrum & Company asked the court to enjoin East Park Radiator & Battery Shop, Inc. from using the "Grid" design feature or any other mark confusingly similar therero.

ANSWER: Admitted, as set forth in paragraph 1(a) of the Complaint for Trademark Infringement, Trade Dress Infringement, Unfair Competition, and Dilution of Civil Action No. 97-3657.

REQUEST NO. 18:

In paragraph No. 11 of the Settlement and Mutual Release Agreement executed by R.W. Fernstrum & Company, East Park Radiator & Battery Shop, Inc., Donovan Marine, Inc., and Duramax, Inc., Duramax, Inc. agreed to modify the design and configuration of its one-piece keel cooler to incorporate a beveled fore and aft header.

ANSWER:

Admitted.

REQUEST NO. 19:

Exhibit No. 1 attached to the Settlement and Mutual Release Agreement executed by R.W. Fernstrum & Company, East Park Radiator & Battery Shop, Inc., Donovan Marine, Inc., and Duramax, Inc. is a true and accurate drawing (not made to scale) of the modified design and configuration of the one-piece keel cooler referred to in paragraph No. 11 of the Settlement and Mutual Release Agreement.

ANSWER:

Admitted.

REQUEST NO. 20:

Duramax, Inc. modified its one-piece keel cooler pursuant to the provisions of paragraph No. 11 of the Settlement and Mutual Release Agreement executed by R.W. Fernstrum & Company, East Park Radiator & Battery Shop, Inc., Donovan Marine, Inc., and Duramax, Inc.

ANSWER:

Denied. Duramax, Inc. was planning to modify its one-piece keel cooler prior to the litigation settled by the Settlement and Mutual Release Agreement executed by R.W. Fernstrum & Company, East Park Radiator & Battery Shop, Inc., Donovan Marine, Inc., and Duramax, Inc.

REQUEST NO. 21:

Pursuant to the provisions of paragraph No. 11 of the Settlement and Mutual Release Agreement, after August 5, 1999, Duramax, Inc. has continuously manufactured and sold one-piece keel coolers with beveled headers.

ANSWER:

Denied. Duramax, Inc. was going to manufacture and sell one-piece keel coolers with beveled headers whether or not the Settlement and Mutual Release Agreement executed by R.W. Fernstrum & Company, East Park Radiator & Battery Shop, Inc., Donovan Marine, Inc., and Duramax, Inc. was in effect. There was one unit made as warranty replacement, and this was not pursuant to an ordinary sale.

REQUEST NO. 22:

Pursuant to the provisions of paragraph No. 11, after August 5, 1999, Duramax has not manufactured and sold one-piece keel coolers without beveled headers.

ANSWER:

Denied. Duramax, Inc. was going to manufacture and sell one-piece keel coolers with beveled headers regardless of the provisions of paragraph No. 11. See response to Request 21.

REQUEST NO. 23:

In paragraph No. 13 of the Settlement and Mutual Release Agreement executed by R.W. Fernstrum & Company, East Park Radiator & Battery Shop, Inc., Donovan Marine, Inc., and Duramax, Inc., Duramax, Inc. agreed that its advertising would display the beveled ends of the headers of its one-piece keel cooler.

ANSWER:

Admitted.

REQUEST NO. 24:

Pursuant to the provisions of paragraph No. 13, after August 5, 1999, the advertising materials of Duramax Marine, L.L.C. featuring pictures or photographs of its one-piece keel coolers have displayed the beveled end of one or both headers.

ANSWER:

Admitted.

REQUEST NO. 28:

Duramax Marine, L.L.C. is not aware of any violations by R.W. Fernstrum & Company of the Settlement and Mutual Release Agreement executed by R.W. Fernstrum & Company, East Park Radiator & Battery Shop, Inc., Donovan Marine, Inc., and Duramax, Inc.

ANSWER:

Admitted.

REQUEST NO. 29:

Duramax, L.L.C. has not violated any of the provisions of the Settlement and Mutual Release Agreement executed by R.W. Fernstrum & Company, East Park Radiator & Battery Shop, Inc.

ANSWER:

Admitted. See the warranty replacement statement at the response to Request No. 21.

REQUEST NO. 30:

Duramax Marine, L.L.C. may not manufacture one-piece keel coolers with rectangular fore and aft headers as shown in the drawing of the mark sought to be registered in U.S. Trademark Application Serial No. 75/701,707.

ANSWER:

Admitted.

REQUEST NO. 31:

Duramax Marine, L.L.C. may not advertise one-piece keel coolers with rectangular fore and aft headers as shown in the drawing of the mark sought to be registered in U.S. Trademark Application Serial No. 75/701,707.

ANSWER:

Admitted.

REQUEST NO. 32:

The terms of the Settlement and Mutual Release Agreement executed by R.W. Fernstrum & Company, East Park Radiator & Battery Shop, Inc., Donovan Marine, Inc., and Duramax, Inc. permit Duramax Marine, L.L.C. to use, distribute, display, or show drawings or photographs of its one-piece keel coolers.

ANSWER:

Admitted, as implied from paragraph 13 of the Settlement and Mutual Release Agreement executed by R.W. Fernstrum & Company, East Park Radiator & Battery Shop, Inc., Donovan Marine, Inc., and Duramax, Inc.

REQUEST NO. 35:

The terms of the Settlement and Mutual Release Agreement executed by R.W. Fernstrum & Company, East Park Radiator & Battery Shop, Inc., Donovan Marine, Inc., and Duramax Inc. permit Duramax Marine, L.L.C. to display, demonstrate, publish drawings or photographs of its one-piece heat keel cooler featuring beveled fore and aft headers.

ANSWER:

Admitted, as implied from paragraph 13 of the Settlement and Mutual Release Agreement executed by R.W. Fernstrum & Company, East Park Radiator & Battery Shop, Inc., Donovan Marine, Inc., and Duramax Inc.

REQUEST NO. 37:

The mark sought to be registered in Application Serial No. 75/701,707 does not depict the design or configuration of the one-piece keel cooler manufactured by Duramax Marine, L.L.C.

ANSWER:

Admitted.

REQUEST NO. 38:

The mark sought to be registered in Application Serial No. 75/701,707 does not depict the design or configuration of the one-piece keel cooler depicted by Opposer in its advertising featuring pictures, photographs or drawings of its one-piece keel coolers.

ANSWER:

Admitted.

REQUEST NO. 39:

Pursuant to the provisions of the Settlement and Mutual Release Agreement executed by R.W. Fernstrum & Company, East Park Radiator & Battery Shop, Inc., Donovan Marine, Inc., and Duramax, Inc., Duramax Marine, L.L.C. is not permitted to manufacture a one-piece keel cooler as depicted in the drawing of the mark in Application Serial No. 75/701,707.

ANSWER:

Admitted.

REQUEST NO. 40:

Purusant to the provisions of the Settlement and Mutual Release Agreement executed by R.W. Fernstrum & Company, East Park Radiator & Battery Shop, Inc., Donovan Marine, Inc., and Duramax, Inc., Duramax Marine, L.L.C. is not permitted to advertise a one-piece keel cooler as depicted in the drawing of the mark in Application Serial No. 75/701,707.

ANSWER:

Admitted.

REQUEST NO. 41:

Date: August 25, 2001

By: _____

D. Peter Hochberg
Counsel for Opposer
D. Peter Hochberg Co., L.P.A.
The Baker Building – 6th Floor
1940 East Sixth Street
Cleveland, Ohio 44114
(216) 771-3800

CERTIFICATE OF SERVICE

I hereby certify that a copy of the foregoing "OPPOSER'S ANSWER TO APPLICANT'S FIRST SET OF REQUESTS FOR ADMISSIONS" was served via first class, postage prepaid, U.S. mail this 25th day of August, 2001, upon:

Samuel D. Littlepage, Esq.
Dickinson Wright PLLC
1901 "L" Street, N.W., Suite 800
Washington, D.C. 20036-3541

ATTORNEYS FOR APPLICANT

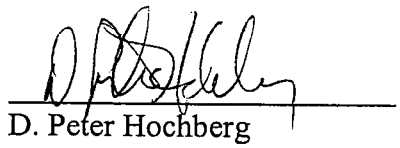

D. Peter Hochberg

IN THE UNITED STATES PATENT AND TRADEMARK OFFICE
BEFORE THE TRADEMARK TRIAL AND APPEAL BOARD

DURAMAX MARINE, L.L.C.,	)	
Opposer,	)	
v.	)	Opposition No. 119,899
R. W. FERNSTRUM & COMPANY,	)	
Applicant.	)	

APPLICANT'S FIRST SET OF REQUESTS FOR ADMISSIONS

Pursuant to Rule 36 of the Federal Rules of Civil Procedure, Applicant, R.W. Fernstrum & Company, through its undersigned counsel, hereby requests Opposer, Duramax Marine, L.L.C., to admit or deny the truth of the following matters within thirty (30) days after service of this request.

This request for admissions is to be interpreted and responded to in accordance with the "Definition of Terms" set forth hereinafter.

Definitions

A. The term "Applicant" means R. W. Fernstrum & Company.

B. The term "Opposer" means Duramax Marine, L.L.C., as well as any predecessors, subsidiary, divisions, or other entities owned or controlled by it (and also includes Opposer's present and former officers, directors, agents, partners, employees, representatives, consultants and attorneys, and all persons acting or purporting to act on their behalf or under Opposer's control), and any related companies (as the latter term is defined in 15 U.S.C. § 1127).

C. The term "Applicant's Mark" means, unless otherwise stated, the subject of Application Serial No. 75/701,707, Drawing of a Marine Heat Exchanger.

Admissions Requests

1. Duramax Marine, L.L.C. is bound by the Settlement and Mutual Release Agreement executed by R.W. Fernstrum & Company, East Park Radiator & Battery Shop, Inc. Donovan Marine, Inc., and Duramax, Inc.

2. Exhibit A is a true and accurate copy of the Settlement and Mutual Release Agreement executed by R.W. Fernstrum & Company, East Park Radiator & Battery Shop, Inc. Donovan Marine, Inc., and Duramax, Inc.

3. At the time the Settlement and Mutual Release Agreement among R.W. Fernstrum & Company, East Park Radiator & Battery Shop, Inc. Donovan Marine, Inc., and Duramax, Inc. was executed, Duramax Marine, L.L.C. was a division of Duramax, Inc.

4. P.C. Miller, Jr., the person who signed the Settlement and Mutual Release Agreement on behalf of Duramax, Inc. attached hereto as Exhibit A, was the President of Duramax, Inc.

5. P.C. Miller, Jr., the person who signed the Settlement and Mutual Release Agreement on behalf of Duramax, Inc. attached hereto as Exhibit A, is a member of Duramax Marine, L.L.C.

advertise a one-piece keel cooler as depicted in the drawing of the mark in Application Serial No. 75/701,707.

41. The one-piece keel cooler manufactured by Duramax Marine, L.L.C. or its predecessor-in-interest was first available for purchase in 1996.

42. The one-piece keel cooler manufactured by Duramax Marine, L.L.C. or its predecessor-in-interest was first available for purchase in 1997.

R. W. FERNSTRUM & COMPANY

Date: July 26, 2001 By: 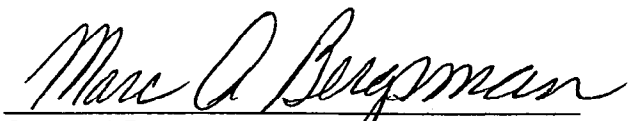

Samuel D. Littlepage, Esq.
Marc A. Bergsman, Esq.
Nicole M. Meyer, Esq.
DICKINSON WRIGHT PLLC
1901 "L" Street, N.W., Suite 800
Washington, D.C. 20036-3541
(Tel.) 202.457.0160
(Fax) 202.659.1559

ATTORNEYS FOR APPLICANT

CERTIFICATE OF SERVICE

I HEREBY CERTIFY that on this 26th day of July, 2001, a true and correct copy of the foregoing **APPLICANT'S FIRST SET OF REQUESTS FOR ADMISSIONS** was served via first class, postage prepaid, U.S. mail upon:

D. Peter Hochberg, Esq.
D. Peter Hochberg Co., L.P.A.
The Baker Building, Sixth Floor
1940 East Sixth Street
Cleveland, Ohio 44114

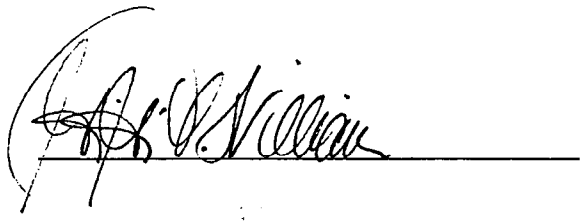

DC 71119-37 69696

SETTLEMENT AND MUTUAL RELEASE AGREEMENT

This Settlement and Mutual Release Agreement (the "Agreement") is made and entered into by, between and among:

(a) R.W. Fernstrum & Company ("Fernstrum"), a corporation organized and existing under the laws of the State of Michigan, represented herein by Paul W. Fernstrum, its duly authorized president;

(b) East Park Radiator & Battery Shop, Inc. ("East Park"), a corporation organized and existing under the laws of the State of Louisiana, represented herein by Todd Boudreaux, its duly authorized president;

(c) Donovan Marine, Inc. ("DMI"), a corporation organized and existing under the laws of the State of Louisiana, represented herein by James A. Dicks, its duly authorized executive vice-president; and

(d) Duramax, Inc. ("Duramax"), a corporation organized and existing under the laws of the State of Ohio, represented herein by P.C. Miller, Jr., its duly authorized president;

who recite that:

WHEREAS, East Park has filed that certain civil action entitled "East Park Radiator & Battery Shop, Inc. versus R.W. Fernstrum & Company," bearing number 97-3598 on the docket of Section "S" of the United States District Court for the Eastern District of Louisiana, wherein East Park seeks a declaratory judgment that: (1) the configuration of the one piece keel cooler product sold by Fernstrum under the GRIDCOOLER trademark is totally functional and not susceptible of trade dress protection; (2) the original East Park keel cooler product, sold under the DURAWELD trademark, does not infringe any trade dress accorded to the GRIDCOOLER product; (3) the redesigned keel cooler product of East Park does not infringe the trade dress asserted by Fernstrum; and (4) East Park is not engaging in unfair competition by employing and/or selling the original or redesigned DURAWELD keel cooler manufactured by East Park;

APPLICANT'S EXHIBIT 1

WHEREAS, Fernstrum has filed that certain civil action entitled "R.W. Fernstrum & Company versus East Park Radiator & Battery Shop, Inc.," bearing number 97-3657 on the docket of Section "S" of the United States District Court for the Eastern District of Louisiana, wherein Fernstrum alleges that: (1) East Park's use of "GRID COOLER" in connection with its business infringes the exclusive rights owned by Fernstrum in its federally-registered trademark (U.S. Reg. No. 941,382) in violation of 15 U.S.C. § 1114(1); (2) East Park's copying of the distinctive appearance of Fernstrum's GRIDCOOLER keel cooler has caused, and is likely to cause, confusion on the part of the relevant trade and purchasing public; (3) East Park's use of Fernstrum's model numbers in connection with its business operations is likely to cause confusion on the part of the relevant trade and purchasing public in violation of 15 U.S.C. §1125(a); (4) East Park's use of the GRIDCOOLER mark and the GRIDCOOLER trade dress is likely to dilute the distinctive qualities of the trademark and trade dress in violation of 15 U.S.C. § 1125(c); and (5) East Park's unlawful misappropriation of Fernstrum's trademark, trade dress, and methods of doing business are likely to cause confusion or mistake on the part of the relevant trade and consuming public constituting unfair competition;

WHEREAS, DMI has filed that certain civil action entitled "Donovan Marine, Inc. versus R.W. Fernstrum & Company," bearing number 97-3974 on the docket of Section "S" of the United States District Court for the Eastern District of Louisiana, wherein DMI seeks monetary damages against Fernstrum for breach of contract for the termination of DMI's distributorship relationship with Fernstrum and recovery of fines and penalties for violations by Fernstrum of 35 U.S.C. §292;

WHEREAS, in the above civil action number 97-3974, Fernstrum has counterclaimed against DMI alleging that: (1) Donovan Marine actively assisted a manufacturing competitor of Fernstrum

(later shown to be Duramax) to design, develop, test, and sell a keel cooler replicating the grid-like appearance of the Fernstrum product in violation of 15 U.S.C. § 1125(a); (2)The sale of the Duramax DuraCooler keel cooler by Donovan Marine has caused, and is likely to cause, confusion on the part of the relevant trade and purchasing public; (3) The sale of the Duramax DuraCooler keel cooler by Donovan Marine constitutes the unlawful misappropriation of Fernstrum's trade dress and is likely to cause confusion or mistake on the part of the relevant trade and consuming public constituting unfair competition; (4) Donovan Marine's use of "GRID COOLER" in connection with its business and the promotion of non-Fernstrum keel coolers infringes the exclusive rights owned by Fernstrum in its federally-registered GRIDCOOLER trademark (U.S. Reg. No. 941,382) in violation of 15 U.S.C. § 1114(1); (5) Donovan Marine's use of the GRID COOLER mark is likely to dilute the distinctive qualities of Fernstrum's GRIDCOOLER the trademark in violation of 15 U.S.C. § 1125(c); and (6) Donovan Marine's unlawful misappropriation of Fernstrum's trademark and trade dress have caused, and are likely to cause, confusion or mistake on the part of the relevant trade and consuming public constituting unfair competition in violation of 15 U.S.C. § 1125(a) and Louisiana common law and that state's Unfair Trade Practices and Consumer Protection Law;

WHEREAS, the above-described civil actions numbers 97-3598, 97-3657 and 97-3974 (hereinafter referred to collectively as the "Litigation") were consolidated for purposes of trial;

WHEREAS, trial in the above Litigation commenced on May 3, 1999 before United States District Judge Mary Ann Vial Lemmon (the "Court");

WHEREAS, Fernstrum, East Park and DMI agreed to settle the claims asserted in the above Litigation during a conference with the Court on May 5, 1999;

WHEREAS, in order to settle and adjust their differences, Fernstrum, East Park and DMI entered into that certain Term Sheet, effective as of May 5, 1999, which set forth in general the terms and provisions for the settlement and compromise of the Litigation, upon the terms and conditions set forth below, which each of the parties prefers to the hope of gaining balanced against the danger of losing;

WHEREAS, although not a party to the Litigation, Duramax appeared and intervened in the Term Sheet to the extent and for the purposes set forth therein and does now so appear and enter into this Agreement; and

WHEREAS, pursuant to the directive of the Court, the Term Sheet, as executed by Fernstrum, East Park, DMI and Duramax, was filed in the record of the Litigation on May 11, 1999;

NOW THEREFORE, in consideration of the premises and in order to implement the transactions contemplated by the Term Sheet and to settle and compromise the differences between Fernstrum, East Park, DMI and Duramax, it is agreed by and among the parties hereto that:

1. Fernstrum does hereby release, waive and forever discharge DMI, together with its successors, assigns, subsidiary and affiliated corporations, officers, directors, employees and agents, of and from any and all damages, attorneys' fees, punitive damages, injunctive and/or equitable relief, demands, liability and rights, claims or causes of action of whatsoever kind, whether presently asserted in the Litigation or which could have been asserted by Fernstrum in the Litigation.

2. DMI does hereby release, waive and forever discharge Fernstrum, together with its successors, assigns, subsidiary and affiliated corporations, officers, directors, employees and agents, of and from any and all damages, attorneys' fees, punitive damages, injunctive and/or equitable

relief, demands, liability and rights, claims of causes of action of whatsoever kind, whether presently asserted in the Litigation or which could have been asserted by DMI in the Litigation.

3. Fernstrum does hereby release, waive and forever discharge East Park, together with its successors, assigns, subsidiary and affiliated corporations, officers, directors, employees and agents, of and from any and all damages, attorneys' fees, punitive damages, injunctive and/or equitable relief, demands liability and rights, claims or causes of action of whatsoever kind, whether presently asserted in the Litigation or which could have been asserted by Fernstrum in the Litigation.

4. East Park does hereby release, waive and forever discharge Fernstrum, together with its successors, assigns, subsidiary and affiliated corporations, officers, directors, employees and agents, of and from any and all damages, attorneys' fees, punitive damages, injunctive and/or equitable relief, demands, liability and rights, claims of causes of action of whatsoever kind, whether presently asserted in the Litigation or which could have been asserted by East Park in the Litigation.

5. Fernstrum agrees to indemnify and hold harmless DMI and its successors, assigns, subsidiary and affiliated corporations, officers, directors, employees and agents, from and against any and all damages, attorneys' fees, punitive damages, injunctive and/or equitable relief, demands, liability and rights, claims or causes of action of whatsoever kind, whether presently asserted by Fernstrum against DMI in the Litigation of which could have been asserted by Fernstrum against DMI in the Litigation.

6. DMI hereby agrees to indemnify and hold harmless Fernstrum and its successors, assigns, subsidiary and affiliated corporations, officers, directors, employees and agents, from and against any and all damages, attorneys' fees, punitive damages, injunctive and/or equitable relief, demands, liability and rights, claims or causes of action of whatsoever kind, whether presently

asserted by DMI against Fernstrum in the Litigation of which could have been asserted by DMI against Fernstrum in the Litigation.

7. Fernstrum hereby agrees to indemnify and hold harmless East Park and its successors, assigns, subsidiary and affiliated corporations, officers, directors, employees and agents, from and against any and all damages, attorneys' fees, punitive damages, injunctive and/or equitable relief, demands, liability and rights, claims or causes of action of whatsoever kind, whether presently asserted by Fernstrum against East Park in the Litigation of which could have been asserted by Fernstrum against DMI in the Litigation.

8. East Park hereby agrees to indemnify and hold harmless Fernstrum and its successors, assigns, subsidiary and affiliated corporations, officers, directors, employees and agents, from and against any and all damages, attorneys' fees, punitive damages, injunctive and/or equitable relief, demands, liability and rights, claims or causes of action of whatsoever kind, whether presently asserted by East Park against Fernstrum in the Litigation of which could have been asserted by East Park against Fernstrum in the Litigation.

9. Fernstrum, East Park and DMI hereby agree that all claims and counterclaims asserted in the Litigation shall be dismissed with prejudice through the filing and entry in the Litigation of a Stipulated Order of Dismissal substantially in the form of Exhibit 1 attached to the said Term Sheet.

10. Fernstrum hereby stipulates and agrees that DMI, East Park and Duramax may, without restriction, sell their existing stock of one-piece keel coolers, and additionally, Fernstrum further agrees that DMI, East Park and Duramax shall have a period of ninety (90) days from and after May 5, 1999 within which to sell and/or manufacture additional keel coolers (over and above

their existing stock) to fill existing orders and new orders received during the said 90 day period. DMI and East Park hereby agree that the existing stock of one-piece keel coolers shall consist of those keel coolers whose respective serial numbers are set forth on written notice thereof provided by counsel for DMI and East Park to counsel for Fernstrum within ten (10) days of the date of entry of the above Stipulated Order of Dismissal.

11. As of the expiration of the ninety (90) day period set forth above, Duramax and East Park agree to modify the design and configuration of their respective one-piece keel coolers so as to incorporate beveled fore and aft header portions as generally set forth on Exhibit 1. The parties hereto acknowledge and agree that Exhibit 1 is a drawing which was negotiated and agreed upon during a recess from the trial in Civil Action Nos. 97-3974 and 97-3598 in the Eastern District of Louisiana (in New Orleans) on or about May 5, 1999, and is not made to scale. Exhibit 1 does show in general terms a side view of one end of a header for a beveled keel cooler having rectangular coolant flow tubes. Exhibit 1 does show that L1 shall be no greater than 1.125 inches, L2 shall be greater than L1 and that θ shall be greater than, or equal to,40°. It is also agreed that Exhibit 1 shows that any beveled keel cooler according to this Agreement does not have a rectangular configuration where L2 is perpendicular to L1 as in Fernstrum's GRIDCOOLER keel cooler. It is further stipulated by the parties that in the event that Fernstrum no longer uses a header configuration consisting of a vertical edge at the aft and fore of the headers on its GRIDCOOLER keel cooler, then at such time Duramax and East Park shall not be required to use the header design modification as illustrated on Exhibit 1 and shall at that time be free to adopt and use the vertical edge header configuration previously utilized on Fernstrum's GRIDCOOLER keel cooler.

12. Upon the expiration of the ninety (90) day period set forth above, all parties hereto agree to permanently mark, affix or imprint their respective word marks (*e.g.*, GRIDCOOLER, DuraCooler, and DURAWELD) on their respective one-piece keel cooler products.

13. Upon the expiration of the ninety (90) day period set forth above, all advertising thereafter placed by Duramax and East Park that depicts their respective one-piece keel coolers will clearly display the beveled end(s) of the header(s) configured in accordance with the provisions of paragraph 11 of this Agreement; provided, however, without limitation or restriction, DMI, Duramax and East Park may exhaust their respective existing advertising materials depicting their respective keel coolers as presently configured. Fernstrum further stipulates and agrees that upon the expiration of the ninety (90) day period set forth above, DMI, Duramax and East Park shall not be required to recall, destroy or issue any disclaimers in connection therewith, any catalogs, promotional materials or other advertising materials depicting their respective one-piece keel coolers as presently configured.

14. DMI, East Park and Duramax each agree that their respective advertisements and/or promotional materials relating or featuring their respective one-piece keel coolers will not hereafter use the word or term "Grid."

15. Within ten (10) days of the entry of the Stipulated Order of Dismissal in the Litigation, Fernstrum shall take such action as may be necessary to effect the withdrawal, with prejudice, of its application (application Serial No. 75/382,250) to federally register the configuration of its one-piece keel cooler product as a trademark now pending before the Trademark Trial and Appeal Board of the U.S. Patent and Trademark Office (the "trademark proceedings"). Nothing

herein shall preclude Fernstrum from seeking to register, in two dimensional design format, its trademark logo featuring its one-piece keel cooler as part of said design.

16. In consideration of the foregoing, Fernstrum expressly covenants not to sue and does hereby release, waive and forever discharge Duramax and East Park, together with their successors, assigns, subsidiary and affiliated corporations, officers, directors, employees and agents, of and from any and all damages, attorneys' fees, punitive damages, equitable and injunctive relief, costs, demands, liability, rights, claims or causes of action of whatsoever kind, whether now known or hereafter discovered, arising in any way out of the facts and/or claims asserted by Fernstrum in the Litigation or which could have been asserted by Fernstrum in the Litigation.

17. In consideration of the foregoing release by Fernstrum, Duramax and East Park expressly covenant not to sue and do hereby release, waive and forever discharge Fernstrum, together with its successors, assigns, subsidiary and affiliated corporations, officers, directors, employees and agents, of and from any and all damages, attorneys' fees, punitive damages, equitable and injunctive relief, costs, demands, liability, rights, claims or causes of action of whatsoever kind, whether now known or hereafter discovered, arising in any way out of the facts and/or claims asserted (or which could have been asserted) by DMI, Fernstrum and East Park in the Litigation or arising in any way from the facts asserted in said Litigation.

18. Fernstrum stipulates and agrees that in the event Duramax or East Park files a trademark application(s) with the U.S. Patent and Trademark Office, which includes the two-dimensional design of their beveled one-piece keel cooler, Fernstrum will not oppose or otherwise contest said application and Fernstrum will not file a petition or other proceeding to cancel any registration issuing from said trademark application.

19. All parties to this Agreement agree that a copy of this Agreement shall be filed in the record of the Litigation, and that the Court in the Litigation shall retain jurisdiction over the parties hereto in order to effectuate and enforce the terms and provisions of this Agreement.

20. Within sixty (60) days after entry of the Stipulated Order of Dismissal in the Litigation, those objects, documents and other materials produced or designated as Confidential Information, and all reproductions thereof, shall be returned to the producing party, less and except those documents filed with the Court or presented to the Court a evidence in connection with the Litigation.

21. This Agreement is entered into without any admission of liability on the part of any party hereto (which said liability is expressly denied), and is entered into by Fernstrum, DMI, East Park and Duramax solely and only for the purposes of effecting the releases and settlements set forth herein and carrying out the provisions of the Term Sheet without the necessity of further legal action.

22. Each of the parties hereto hereby represents that said party has entered into this Agreement of its own free will, after reading same and conferring with its respective counsel, and has not been induced to execute this Agreement as a result of any action, promise or representation other than those which are expressly set forth in this Agreement.

23. Each of the parties to this Agreement shall bear their own costs, expenses and attorneys' fees incurred in connection with the Litigation and the trademark proceedings.

24. The terms and provisions of this Agreement shall inure to the benefit of, and shall be binding upon, all subsidiaries, affiliates, successors, assigns and/or related companies or entities controlled by the parties hereto (including but not limited to Progressive Allied Industries, Inc.) and

shall serve to protect and be for the express benefit of all customers, agents and other persons acting for the benefit of the parties with respect to the transactions and occurrences dealt with herein.

THUS DONE AND EXECUTED, in multiple originals on the dates hereinafter set forth but all as of May 5, 1999, which is the effective date hereof.

WITNESSES:

_____

_____

_____

_____

_____

_____

_____

_____

R.W. Fernstrum & Company

By: Paul W. Fernstrum

Paul W. Fernstrum, President

Date: 7/21/99

Donovan Marine, Inc.

By: James A. Dicks

James A. Dicks, Executive Vice-President

Date: 7-16-99

East Park Radiator & Battery Shop, Inc.

By: Todd R. Boudreaux

Todd Boudreaux, President

Date: 8/3/99

Duramax, Inc.

By: P.C. Miller

P.C. Miller, Jr., President

Date: 29 July 1999

CONFIDENTIAL

MIKE BRAKEY

5/5/99

Illustration of proposed header chamfer configuration for 2.5" tall rectangular tube.

Michael W Brakey

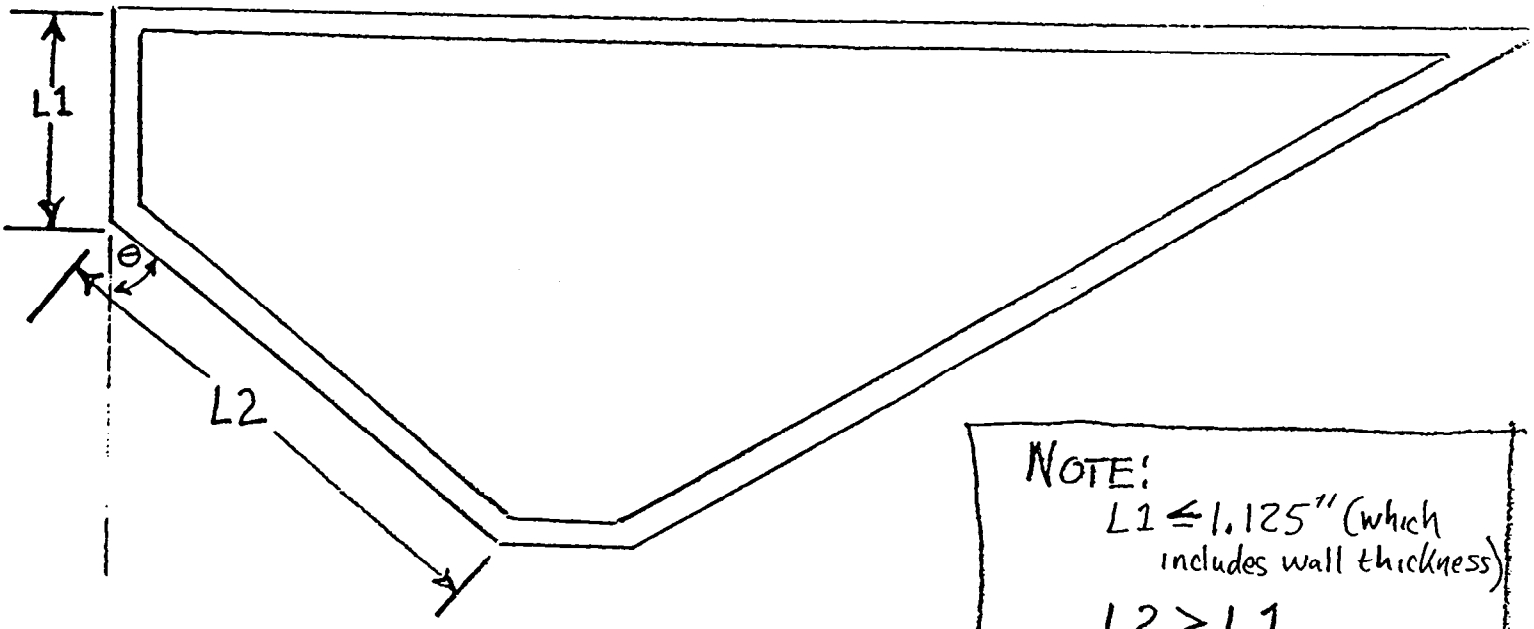

NOTE:

$L1 \leq 1.125"$ (which includes wall thickness)

$L2 > L1$

$\theta \geq 40°$

Applies to all B, C, D Models

EXHIBIT

"1"

IN THE UNITED STATES PATENT AND TRADEMARK OFFICE
BEFORE THE TRADEMARK TRIAL AND APPEAL BOARD

DURAMAX MARINE, LLC ,	)	
	)	
Opposer,	)	
	)	
v.	)	Opposition No. 119,899
	)	
R.W. FERNSTRUM & COMPANY,	)	
	)	
Applicant.	)	

04 JUL 30 PM 12:16

APPLICANT'S SECOND NOTICE OF
RELIANCE UNDER TRADEMARK RULE 2.120(j)

Applicant hereby notifies Opposer of its reliance on Opposer's Answers To Applicant's Fourth Set Of Requests For Admission in accordance with Trademark Rule 2.120(j)(3)(i). Specifically, Applicant relies on Opposer's responses to Requests for Admission Nos. 78 – 81, 83 – 92, 95 – 121, 128, 129, and 132 – 135. Applicant served its Fourth Set Of Requests For Admission on November 15, 2001.[1] Opposer failed to serve responses. Pursuant to FED.R.CIV.P. 36(a) each matter for which an admission is requested is deemed admitted.[2]

---

[1] Attached as Exhibit G are the documents Opposer produced pursuant to FED.R.CIV.P. 34 document production and on which Applicant is relying. These documents were authenticated by Opposer through FED.R.CIV.P. 36 Requests for Admission.

[2] Applicant's Fourth Set Of Requests For Admission were the subject of a telephone conference between Applicant and Opposer before the Trademark Trial and Appeal Board on January 8, 2002. The Board denied Applicant's motion to modify the November 29, 2001 Suspension Order ("opposer is not required to respond at this time to applicant's most recent discovery requests")(emphasis added). January 8, 2002 Order. Subsequently, in its February 5, 2003 Order, the Board held that "The parties are allowed THIRTY DAYS from the mailing date of this order serve responses to any outstanding discovery requests not already addressed in this order." Accordingly, Opposer was allowed until March 7, 2003 to serve its responses.

R. W. FERNSTRUM & COMPANY

Date: July 26, 2004

Samuel D. Littlepage, Esq.
Marc A. Bergsman, Esq.
Dickinson Wright PLLC
1901 L Street, N.W., Suite 800
Washington, D.C. 20036
(202) 659-6944
Mbergsman@dickinsonwright.com

Attorneys for Applicant

Certificate Of Service

I hereby certify that one copy of Applicant's Second Notice Of Reliance Under Trademark Rule 2.120(j) was mailed by first class mail, postage prepaid, this 30th day of July, 2004, to:

D. Peter Hochberg, Esq.
D. Peter Hochberg Co., L.P.A.
The Baker Building, Sixth Floor
1940 East Sixth Street
Cleveland, Ohio 44114

Regina Matt

DC 71119-37 85841

IN THE UNITED STATES PATENT AND TRADEMARK OFFICE
BEFORE THE TRADEMARK TRIAL AND APPEAL BOARD

DURAMAX MARINE, L.L.C., Opposer, v. **R. W. FERNSTRUM & COMPANY,** Applicant.	**Opposition No. 119,899**

APPLICANT'S FOURTH SET OF REQUESTS FOR ADMISSIONS

Pursuant to Rule 36 of the Federal Rules of Civil Procedure, Applicant, R.W. Fernstrum & Company, through its undersigned counsel, hereby requests Opposer, Duramax Marine, L.L.C., to admit or deny the truth of the following matters within thirty (30) days after service of this request.

This request for admissions is to be interpreted and responded to in accordance with the "Definition of Terms" set forth hereinafter.

Definitions

A. The term "Applicant" means R. W. Fernstrum & Company.

B. The term "Opposer" means Duramax Marine, L.L.C., as well as any predecessors, subsidiary, divisions, or other entities owned or controlled by it (and also includes Opposer's present and former officers, directors, agents, partners, employees, representatives, consultants and attorneys, and all persons acting or purporting to act

on their behalf or under Opposer's control), and any related companies (as the latter term is defined in 15 U.S.C. § 1127).

C. The term "Applicant's Mark" means, unless otherwise stated, the subject of Application Serial No. 75/701,707, Drawing of a Marine Heat Exchanger.

Admissions Requests

Request No. 78

Keel coolers are not restricted to one design.

Request No. 79

Keel coolers are not restricted to one size.

Request No. 80

Keel coolers are not restricted to one shape.

Request No. 81

The most common keel coolers are channels (half – tubes) welded to the hull of a vessel.

Request No. 83

Marine heat exchangers or keel coolers may have headers that have an oval shape.

Request No. 84

Marine heat exchangers or keel coolers may have headers that comprise a tube or pipe extending in and out of the hull of a vessel.

Request No. 85

Marine heat exchangers or keel coolers may have headers that have beveled ends such as those sold by Opposer.

Request No. 86

The mark sought to be registered in application Serial No. 75/701,707 is not disclosed in Patent No. 2,383,318.

Request No. 87

The mark sought to be registered in application Serial No. 75/701,707 is not disclosed in Patent No. 4,338,993.

Request No. 88

Document Nos. 0004 – 00008, 00010 – 00012, 00015 – 00028, 00030 – 00033, and 00036 – 00063 are true and accurate copies of advertising and promotional materials distributed by Opposer since August 5, 1999.

Request No. 89

Document Nos. 00064 – 00086 and 00088 are true and accurate copies of advertising and promotional materials distributed and used by Opposer since August 5, 1999.

Request No. 90

Document Nos. 00002 – 00003, 00004 – 00008, 00011 – 000012, 00023 – 00027, 00030 – 000033, 000036 – 000038, 000053, 00092 – 001112 and 00116 are true and accurate copies of documents that explain the utilitarian advantages of bevelded headers on a one-piece keel cooler.

Request No. 91

Document Nos. 00001 – 00003 are true and accurate copies of documents that explain why a beveled keel cooler are superior in function vis-à-vis a one-piece keel cooler with rectangular headers.

Request No. 92

Document Nos. 00486 – 00517 are true and accurate copies of documents from "one other independent manufacturer and marketer" of one-piece keel coolers referred to by Opposer in Paragraph Nos. 13 and 14 of the Notice of Opposition as amended.

Request No. 95

Exhibit C attached hereto is a true and accurate copy of a catalog for keel coolers manufactured and sold by The Walter Machine Company, Inc.

Request No. 96

Exhibit D attached hereto is a true and accurate copy of a catalog for keel coolers manufactured by Johnson Rubber Company.

Request No. 97

The keel coolers described in the catalog attached hereto as Exhibit D are sold by Duramax Marine LLC, the Opposer.

Request No. 98

Exhibit E attached hereto is a true and accurate copy of representative pages from Opposer's web site at www.duramaxmarine.com.

Request No. 99

Exhibit F attached hereto is a true and accurate copy of the installation manual for Opposer's DuraCooler keel that is available from Opposer's web site at www.duramaxmarine.com.

Request No. 100

Opposer's keel coolers are manufactured using a two – piece header design so the keel cooler can be brazed together both on the inside and outside.

Request No. 101

Opposer's use of a two – piece header design allowing the keel cooler to be brazed together both on the inside and outside is more efficient than the process used for manufacturing a traditional rectangular header.

Request No. 102

Opposer's use of a two – piece header design allowing the keel cooler to be brazed together both on the inside and outside is a simpler manufacturing method than the process used for manufacturing a traditional rectangular header.

Request No. 103

Opposer's use of two – piece header design allowing the keel cooler to be brazed together both on the inside and outside is a less expensive method of manufacturing than the process used for manufacturing a traditional rectangular header.

Request No. 104

Opposer's use of beveled headers in its keel coolers enhances the internal coolant flow as compared to keel coolers with rectangular headers.

Request No. 105

Opposer's use of beveled headers in its keel coolers enhances the external water flow over and around the keel coolers as compared to keel coolers with rectangular headers..

Request No. 106

Opposer's use of beveled headers in its keel coolers reduces the pressure drop in the keel coolers as compared to keel coolers with rectangular headers..

Request No. 107

Opposer's use of beveled headers in its keel coolers provides optimum heat transfer efficiency as compared to keel coolers with rectangular headers.

Request No. 108

Opposer's use of beleved headers in its keel coolers results in a smaller keel cooler requirements as compared to keel coolers with rectangular headers.

Request No. 109

Opposer's use of beveled headers in its keel coolers results in a reduction in cooling system costs as compared to keel coolers with rectangular headers.

Request No. 110

Opposer's use of beveled headers in its keel coolers for replacment retrofits will result in increased cooling capacity within the same installation as compared to keel coolers with rectangular headers.

Request No. 111

Opposer's use of beveled headers in its keel coolers in replacement retrofits will result in an additional cooling safety factor within the same installation as compared to keel coolers with rectangular headers.

Request No. 112

Opposer's use of beveled headers in its keel coolers will result in better fuel efficiency for the vessel as compared to keel coolers with rectangular headers.

Request No. 113

Opposer's use of beveled headers in its keel coolers will result in less drag for the vessel as compared to keel coolers with rectangular headers.

Request No. 114

Opposer's use of beveled headers in its keel coolers will deflect more debris away from the cooler as compared to keel coolers with rectangular headers.

Request No. 115

Opposer's use of beveled headers in its keel coolers means that the anodes may be mounted on the streamlined edge of the headers.

Request No. 116

Opposer's use of bevelded headers in its keel coolers allows the the anodes to be mounted on the streamlined edge of the headers which provides less standoff distance from the hull as compared to keel coolers with rectangular headers.

Request No. 117

Opposer's use of bevelded headers in its keel coolers allows the the anodes to be mounted on the streamlined edge of the headers which provides less drag as compared to keel coolers with rectangular headers.

Request No. 118

Opposer's use of bevelded headers in its keel coolers allows the the anodes to be mounted on the streamlined edge of the headers which provides better fuel efficiency for the vessel as compared to keel coolers with rectangular headers.

Request No. 119

Opposer's use of bevelded headers in its keel coolers allows the the anodes to be mounted on the streamlined edge of the headers which reduces the chance for damage by debris as compared to keel coolers with rectangular headers.

Request No. 120

Opposer's keel coolers featuring beveled headers is more durable than keel coolers manufactured with rectangular headers.

Request No. 121

Opposer's keel coolers featuring beveled headers rather than rectangular headers increase the coolant flow to the outside tubes that had been used less efficiently in keel coolers with the rectangular headers.

Request No. 128

Opposer intends to use the design of its keel cooler as a trademark.

Request No. 129

Opposer intends to use the design of its keel cooler as service mark.

Request No. 132

Opposer intends to use the design of the header of its keel cooler as a trademark.

Request No. 133

Opposer intends to use the design of the header of its keel cooler as a service mark.

Request No. 134

The "fair use" defense as enumerated in 15 U.S.C. §1115(b)(4) allows Opposer to display and demonstrate its one-piece keel cooler without being liable for trademark infringement.

Request No. 135

The "fair use" defense as enumerated in 15 U.S.C. §1115(b)(4) allows Opposer to publish photographs and drawings of its marine heat exchanger without being liable for trademark infringement

R. W. FERNSTRUM & COMPANY

Date: November 14, 2001

By: Marc A. Bergsman

Samuel D. Littlepage, Esq.
Marc A. Bergsman, Esq.
Nicole M. Meyer, Esq.
DICKINSON WRIGHT PLLC
1901 "L" Street, N.W., Suite 800
Washington, D.C. 20036-3541
(Tel.) 202.457.0160
(Fax) 202.659.1559

ATTORNEYS FOR APPLICANT

CERTIFICATE OF SERVICE

I HEREBY CERTIFY that on this 15th day of November, 2001, a true and correct copy of the foregoing ***APPLICANT'S FOURTH SET OF REQUESTS FOR ADMISSION*** was served via U.S. certified mail, return receipt requested, upon:

D. Peter Hochberg, Esq.
D. Peter Hochberg Co., L.P.A.
The Baker Building, Sixth Floor
1940 East Sixth Street
Cleveland, Ohio 44114

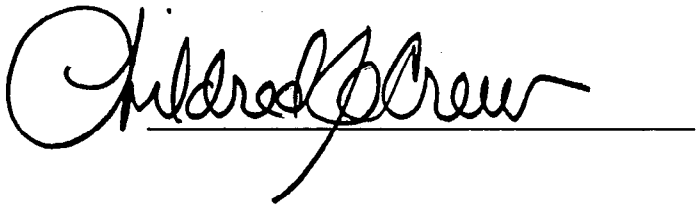

DC 71119-37 73431-2

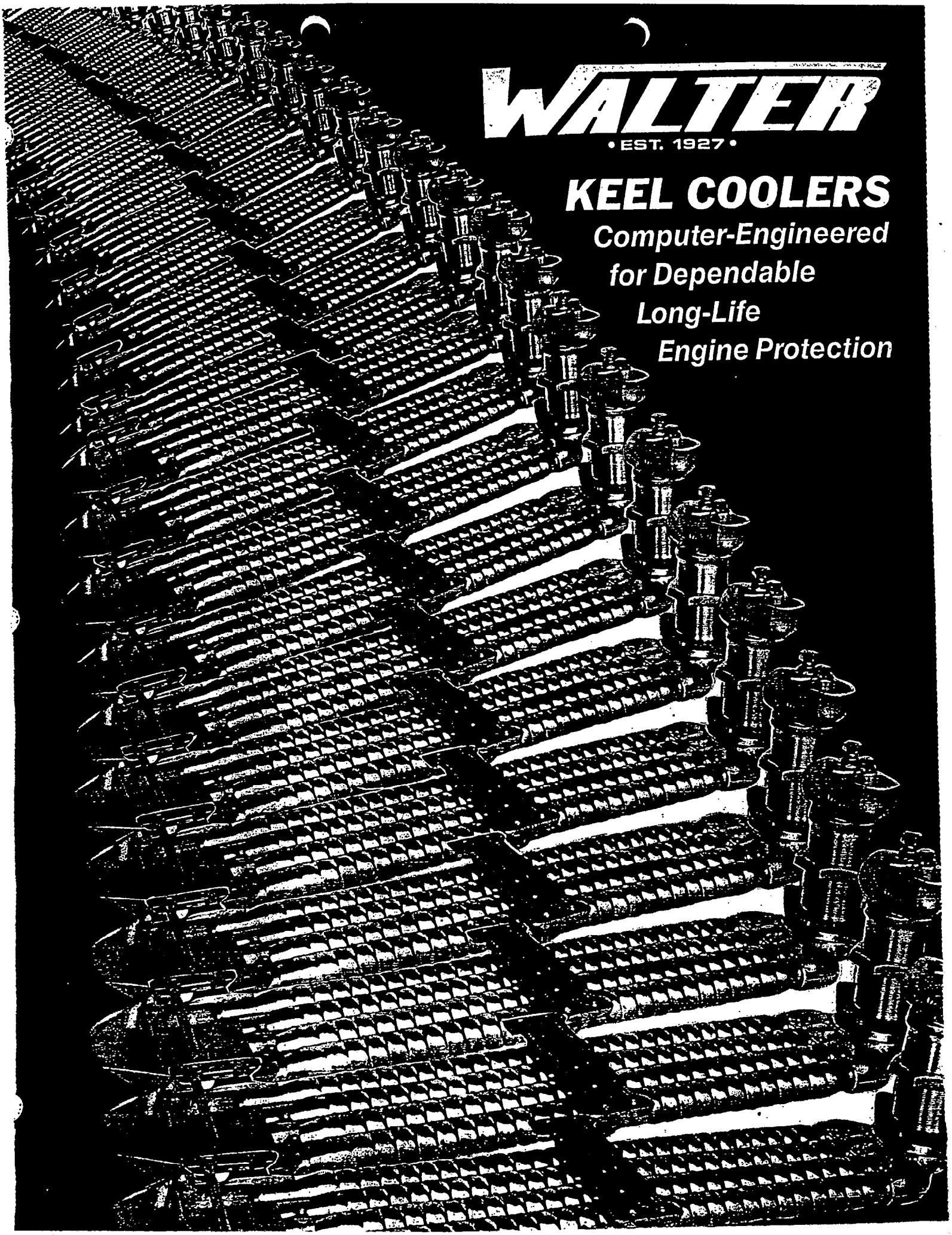
WALTER
• EST. 1927 •
KEEL COOLERS
Computer-Engineered
for Dependable
Long-Life
Engine Protection

WALTER KEEL COOLERS

• EST. 1927 •

PROTECT YOUR ENGINE INVESTMENT!
WALTER Keel Coolers are outboard type freshwater closed cooling systems which are designed for years of reliable and trouble-free operation. By eliminating salt, silt and sand deposits in the engine jackets, WALTER Keel Coolers extend the life of your engines.

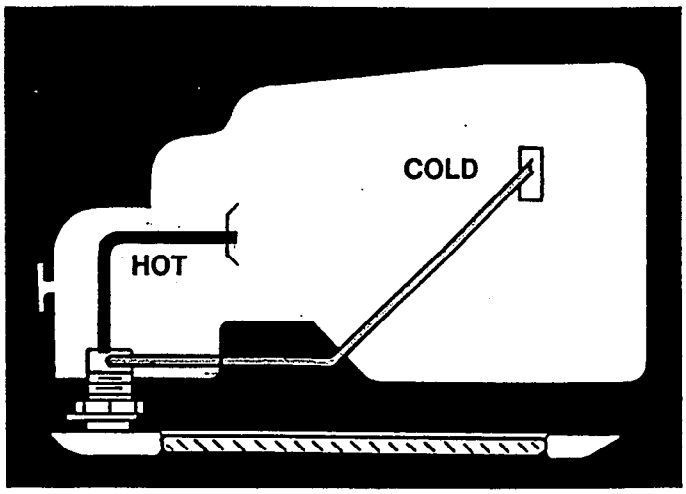

CUT DOWNTIME & OPERATE TROUBLE FREE!
Unlike inboard heat exchangers, WALTER Keel Coolers eliminate the possibility of the clogging of your strainers and fresh water pump. Since you can add anti-freeze, there is no need to drain the cooling system ever!

SAVE ON FUEL & MAINTENANCE COSTS!
Proper cooling without salt, mud, and sand allows your engine to run more efficiently, saving on fuel and maintenance costs. Lightweight and streamlined design means increased operating efficiency through the reduction of drag and weight when compared with cooling systems made of channel iron and bulky grid-type coolers.

PROVEN RELIABLE FOR OVER 50 YEARS!
Thousands of WALTER Keel Coolers have demonstrated their proven designs on ocean-going commercial, fishing, and naval vessels of up to 10,000 horsepower. Fifty years of experience in cooler design and manufacture goes into every WALTER Keel Cooler sold.

COMPUTER-AIDED ENGINEERING & CUSTOM SIZING!
The engineering staff of THE WALTER MACHINE COMPANY uses advanced computer programs to accurately recommend the proper WALTER Keel Cooler for each application based upon the worst possible operating conditions. Each WALTER Keel Cooler is sized for a minimum pressure drop so that there is no restriction to the coolant flow.

CAN THE COMPETITION MAKE THESE CLAIMS?

3 STYLES, 2 WITH ONLY 1 THRU-HULL FITTING!
WALTER Keel Coolers are available in 3 models, 19 sizes, and over 200 standard configurations to ensure a perfect fit for every cooling application from small generator sets to 10,000 HP propulsion engines to marine transmissions, aftercoolers, and intercoolers. The END MODEL and CENTER MODEL have only one thru-hull fitting, thereby greatly simplifying installation and inboard plumbing and reducing installation costs. Single stem model coolers feature a "temperature adjusting screw" to allow for engine temperature adjustment. Examples of each model are shown below; each model comes in various sizes.

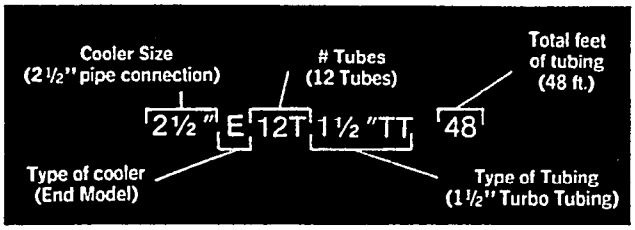

END MODEL

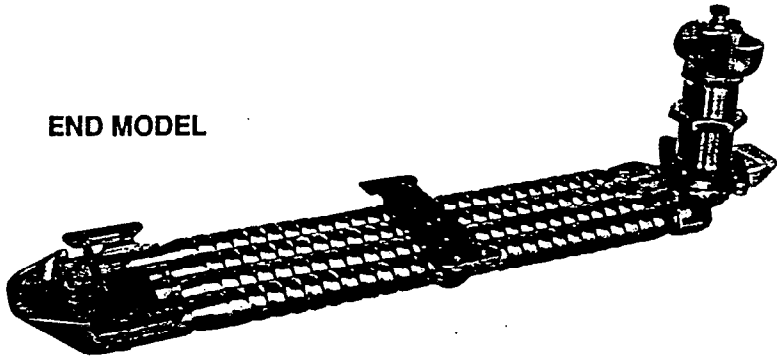

DOUBLE STEM MODEL

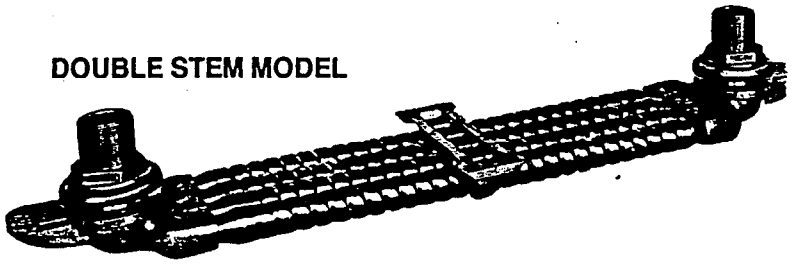

CENTER MODEL

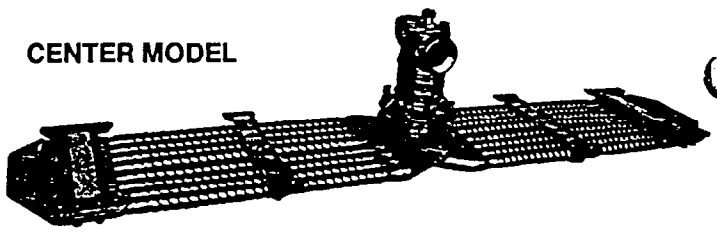

ENGINEERED ENGINE COOLING

TURBO TUBE MAXIMIZES HEAT EXCHANGE AND ALLOWS FOR COMPACT KEEL COOLER SIZE!
All WALTER Keel Coolers feature WALTER TURBO TUBE which has spiral grooves on the outer wall and spiral ridges on the inner wall. The spirals force the coolant flow to become turbulent, continually propelling and swirling the coolant against the inner wall of the tube, thereby greatly increasing heat transfer. The turbulating action makes WALTER TURBO TUBE much more efficient for heat transfer than smooth rectangular or round tube in which most of the coolant flows through the center of the tube without contacting the inner tube wall. Because TURBO TUBE is so efficient, a much more compact WALTER Keel Cooler can be used when compared with coolers using smooth rectangular or round tube.

TURBO TUBE

THE MOST CORROSION RESISTANT MATERIALS!
WALTER TURBO TUBE is made of the premium 70/30 cupronickel alloy (70% copper, 30% nickel) which is stronger and more corrosion resistant than competitor's 90/10 cupronickel tubing. All WALTER Keel Coolers have headers made of solid bronze which, unlike rubber coolers, cannot possibly deform or become brittle due to temperature differences or age hardening. All coolers are supplied with monel fastenings and gaskets necessary for installation. High grade zinc anodes are attached at either end of every cooler to protect against galvanic corrosion.

NO CRACKED BRAZED JOINTS TO LEAK!
WALTER Keel Coolers are engineered with flexible double o-ring aircraft-type pressure seals which have proven completely reliable in thousands of installations. The tube is simply slipped into the header socket for a watertight connection. This eliminates the problem of brazed joints cracking in heavy seas as the hull flexes. Repairing cracked brazed joints is not only expensive but also requires skilled labor. Flexible WALTER design allows the tubes to conform to the hull curvatures. Should the vessel be repowered with a larger engine, the cooling capacity of the WALTER Keel Cooler can be increased by using WALTER Tube Couplings and additional tubes, possibly eliminating the need for an entire new cooling system.

PRECISION MANUFACTURE!
The WALTER MACHINE COMPANY combines the use of the most highly advanced and accurate computerized "CNC" machinery with old-world craftsmanship and know-how in the manufacture of every WALTER Keel Cooler. For the shipbuilder and owner this means economical prices and replacement parts available from stock!

STREAMLINED DESIGN!
WALTER Keel Coolers have tube headers which are streamlined, unlike bulky box-type coolers which can create drag. It is not uncommon for WALTER Keel Coolers to be used on vessels with top speeds of 30 knots or more. WALTER Keel Coolers may also be easily recessed for flush-with-hull installations.

FOULPROOF DESIGN!
Due to the streamlined design, it is improbable for debris or mud to stay attached to WALTER Keel Coolers. Since there is a space between the hull and the round tube surface, seawater circulates between and down through the round tubes, continuously washing debris away from the cooling surfaces.

DEMOUNTABLE DESIGN!
WALTER Keel Coolers are designed to be demounted in minutes. This feature allows the cooler headers and tubing to be demounted without disturbing the inside thru-hull fittings or inboard plumbing. A vessel with spare TURBO TUBES aboard can quickly get back into operation should the cooler become damaged; there is no need to haul the boat since divers can remove the cooler underwater. No skilled labor is required to replace the damaged tubes; an ordinary wrench is all that is required.

DOUBLE STACK COOLERS
All 12 and 16 tube WALTER Keel Coolers consist of two layers of tubing in order to provide the maximum amount of cooling in the shortest assembly possible.

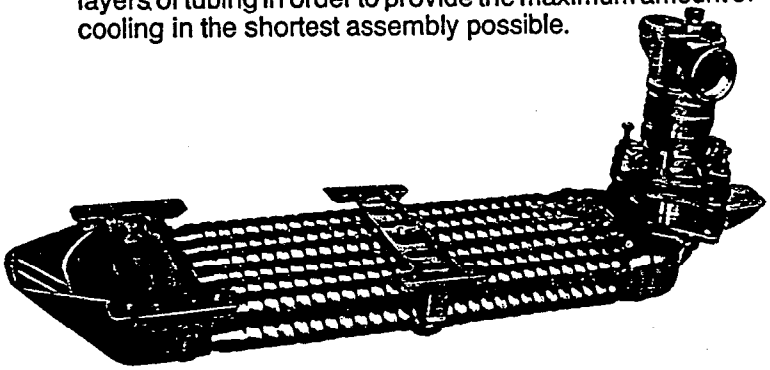

POSITIVE INSULATION FROM STEEL HULLS!
Insulating plates, bushings and washers are provided for installations on steel hulls in order to insulate the non-ferrous cooler fittings from the ferrous steel hull. Spacer plates and collars are provided for welding to the steel hull so that the need for small bolts through the hull, which are susceptible to leaks, is completely eliminated.

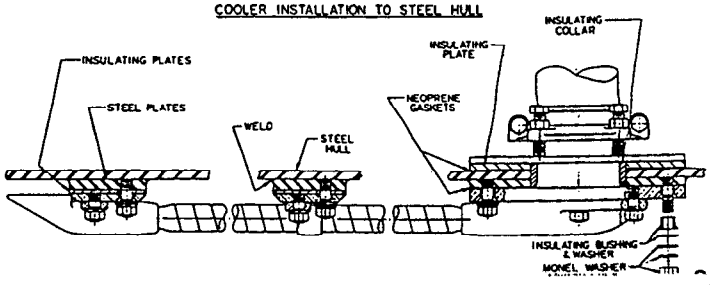

WALTER •EST. 1927• END MODEL KEEL COOLERS

ID MODELS Our most popular, shortest, and easiest keel oler model to install, the WALTER END MODEL Keel Cooler has ly one thru-hull fitting located at the end of the cooler which ntains both the inlet and outlet water connections. Size 1¼" and ger END MODEL coolers feature a temperature adjusting screw d standard female pipe threads equal to the cooler size number easy connection with standard pipe fittings (1½"E 4T has 1½" T pipe connections). END MODEL coolers are available in 2, 4, 8, , and 16 tube configurations depending upon the size of the gine's fresh water pump; the 12 and 16 tube coolers consist of a ouble stack".

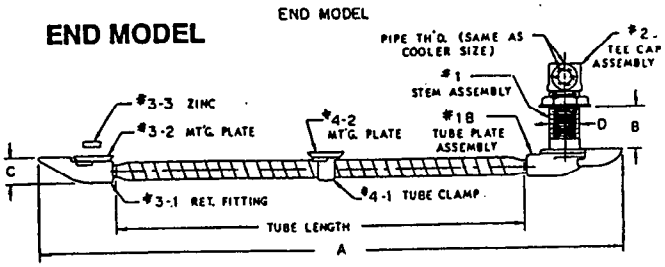

COOLER GROUP END MODELS	NO. OF TUBE CLAMPS	NO. AND LENGTH PER TUBE	MAX. WIDTH	A	B	C	D
¾" E 2T 1½ TT- 6	0	2- 3'	5¾	47½	2¼	1⅞	1¾
8	0	2- 4'	"	59½	"	"	"
10	0	2- 5'	"	71½	"	"	"
12	1	2- 6'	"	83½	"	"	"
14	1	2- 7'	"	95½	"	"	"
16	1	2- 8'	"	107½	"	"	"
20	1	2-10'	"	131½	"	"	"
1" E 2T 1½ TT- 6	0	2- 3'	5¾	47½	2¼	1⅞	2⅛
8	0	2- 4'	"	59½	"	"	"
10	0	2- 5'	"	71½	"	"	"
12	1	2- 6'	"	83½	"	"	"
14	1	2- 7'	"	95½	"	"	"
16	1	2- 8'	"	107½	"	"	"
20	1	2-10'	"	131½	"	"	"
1" E 4T 1½ TT- 12	0	4- 3'	9⅛	51	2¼	2	2⅛
16	0	4- 4'	"	63	"	"	"
20	0	4- 5'	"	75	"	"	"
24	1	4- 6'	"	87	"	"	"
28	1	4- 7'	"	99	"	"	"
32	1	4- 8'	"	111	"	"	"
40	1	4-10'	"	135	"	"	"
48	2	4-12'	"	159	"	"	"
56	2	4-14'	"	183	"	"	"
64	2	4-16'	"	207	"	"	"
80	3	4-20'	"	255	"	"	"
1¼" E 4T 1½TT- 12	0	4- 3'	9⅛"	51¼	3	2	2⅜
16	0	4- 4'	"	63¼	"	"	"
20	0	4- 5'	"	75¼	"	"	"
24	1	4- 6'	"	87¼	"	"	"
28	1	4- 7'	"	99¼	"	"	"
32	1	4- 8'	"	111¼	"	"	"
40	1	4-10'	"	135¼	"	"	"
48	2	4-12'	"	159¼	"	"	"
56	2	4-14'	"	183¼	"	"	"
64	2	4-16'	"	207¼	"	"	"
80	3	4-20'	"	255¼	"	"	"
1½" E 4T 1½ TT- 12	0	4- 3'	9⅛	51¼	3¼	2	2⅞
16	0	4- 4'	"	63¼	"	"	"
20	0	4- 5'	"	75¼	"	"	"
24	1	4- 6'	"	87¼	"	"	"
28	1	4- 7'	"	99¼	"	"	"
32	1	4- 8'	"	111¼	"	"	"
40	1	4-10'	"	135¼	"	"	"
48	2	4-12'	"	159¼	"	"	"
56	2	4-14'	"	183¼	"	"	"
64	2	4-16'	"	207¼	"	"	"
80	3	4-20'	"	255¼	"	"	"
2" E 8T 1½ TT- 24	0	8- 3'	16⅜	57	4	2¼	3¾
32	0	8- 4'	"	69	"	"	"
40	0	8- 5'	"	81	"	"	"
48	1	8- 6'	"	93	"	"	"
56	1	8- 7'	"	105	"	"	"
64	1	8- 8'	"	117	"	"	"
80	1	8-10'	"	141	"	"	"
96	2	8-12'	"	165	"	"	"
112	2	8-14'	"	189	"	"	"
128	2	8-16'	"	213	"	"	"
160	3	8-20'	"	261	"	"	"
2½" E 12T 1½ TT- 36	0	12- 3'	12⅞	58½	4⅛	3⅜	4½
48	0	12- 4'	"	70½	"	"	"
60	0	12- 5'	"	82½	"	"	"
72	1	12- 6'	"	94½	"	"	"
84	1	12- 7'	"	106½	"	"	"

COOLER GROUP END MODELS (Cont.)	NO. OF TUBE CLAMPS	NO. AND LENGTH PER TUBE	MAX. WIDTH	A	B	C	D
2½" E 12T 1½ TT- 96	1	12- 8'	12⅞	118½	4⅛	3⅜	4½
120	1	12-10'	"	142½	"	"	"
144	2	12-12'	"	166½	"	"	"
168	2	12-14'	"	190½	"	"	"
192	2	12-16'	"	214½	"	"	"
240	3	12-20'	"	262½	"	"	"
3" E 16T 1½ TT- 48	0	16- 3'	18⅜	59¾	5¼	3⅞	5⅛
64	0	16- 4'	"	71¾	"	"	"
80	0	16- 5'	"	83¾	"	"	"
96	1	16- 6'	"	95¾	"	"	"
112	1	16- 7'	"	107¾	"	"	"
128	1	16- 8'	"	119¾	"	"	"
160	1	16-10'	"	143¾	"	"	"
192	2	16-12'	"	167¾	"	"	"
224	2	16-14'	"	191¾	"	"	"
256	2	16-16'	"	215¾	"	"	"
320	3	16-20'	"	263¾	"	"	"

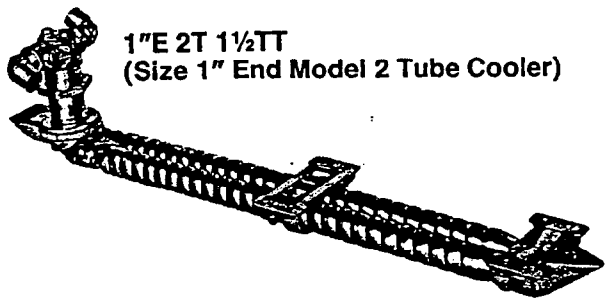

1"E 2T 1½TT
(Size 1" End Model 2 Tube Cooler)

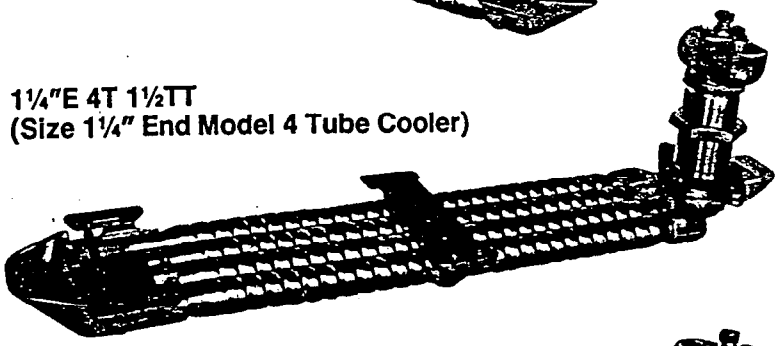

1¼"E 4T 1½TT
(Size 1¼" End Model 4 Tube Cooler)

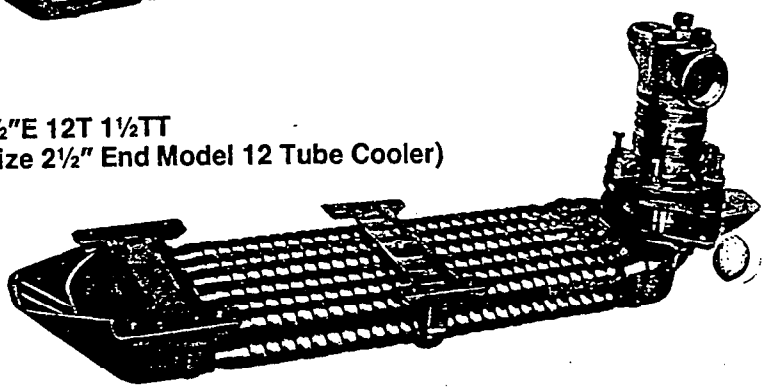

2½"E 12T 1½TT
(Size 2½" End Model 12 Tube Cooler)

WALTER CENTER MODEL KEEL COOLERS

•EST. 1927•

CENTER MODEL

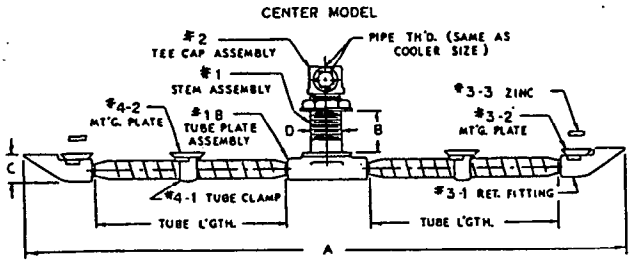

CENTER MODELS The totally unique WALTER CENTER MODEL Keel Coolers have only one thru-hull fitting which is located in the center of the cooler and contains both the inlet and outlet water connections. The CENTER MODEL coolers are half as wide but twice as long as the END MODEL coolers. All CENTER MODEL coolers feature a temperature adjusting screw and standard female pipe threads equal to the cooler size number for easy connection with standard pipe fittings (2"C 4T has 2" NPT pipe connections). CENTER MODEL coolers are available with 2, 4, 8, 12 and 16 tube configurations depending upon the size of the engine's fresh water pump; the 12 and 16 tube coolers consist of a "double stack."

COOLER GROUP CENTER MODELS	NO. OF TUBE CLAMPS	NO. AND LENGTH PER TUBE	MAX. WIDTH	A	B	C	D
1¼" C 2T 1½ TT- 12	0	4- 3'	6⅜	86¾	3	2	2⅜
16	0	4- 4'	"	110¾	"	"	"
20	0	4- 5'	"	134¾	"	"	"
24	2	4- 6'	"	158¾	"	"	"
28	2	4- 7'	"	182¾	"	"	"
32	2	4- 8'	"	206¾	"	"	"
40	2	4-10'	"	254¾	"	"	"
48	4	4-12'	"	302¾	"	"	"
56	4	4-14'	"	350¾	"	"	"
64	4	4-16'	"	398¾	"	"	"
80	6	4-20'	"	494¾	"	"	"

3"C 8T 1½TT
(Size 3" Center Model 8 Tube Cooler)

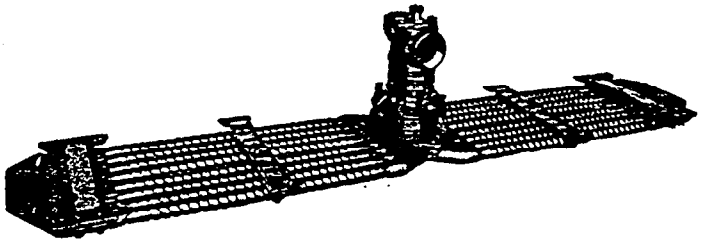

OVER 1000 COMPUTER-AIDED RECOMMENDATIONS!
All WALTER Keel Coolers are computer-aided designed for your specific operating conditions. Based on computer analysis and over 50 years of experience, our engineering staff is so confident that we publish over 1000 standard recommendations for all popular domestic and foreign engines, making it quick and simple to know which WALTER Keel Cooler is right for your application. Our standard recommendations are based on a maximum sea water temperature of 85°F (29.4°C) for worldwide operation. Propulsion engine recommendations are provided for 2, 5, and 10 knot minimum hull speeds under full rated power. Gen-set recommendations are for dockside service and assume a ½ knot current or thermal flow. If your vessel will operate exclusively in colder waters or has unusual operating conditions, W.M.C. engineers will be happy to recommend a specific cooler for your application. Please note that the cooling capacities of the END, CENTER and DOUBLE STEM models are equivalent as long as the size of the keel cooler and the amount of tubing are equal.

COOLER GROUP CENTER MODELS (Cont.)	NO. OF TUBE CLAMPS	NO. AND LENGTH PER TUBE	MAX. WIDTH	A	B	C	D
1½" C 2T 1½ TT- 12	0	4- 3'	6⅜"	86¾	3¼	2	2⅞
16	0	4- 4'	"	110¾	"	"	"
20	0	4- 5'	"	134¾	"	"	"
24	2	4- 6'	"	158¾	"	"	"
28	2	4- 7'	"	182¾	"	"	"
32	2	4- 8'	"	206¾	"	"	"
40	2	4-10'	"	254¾	"	"	"
48	4	4-12'	"	302¾	"	"	"
56	4	4-14'	"	350¾	"	"	"
64	4	4-16'	"	398¾	"	"	"
80	6	4-20'	"	494¾	"	"	"
2" C 4T 1½ TT- 24	0	8- 3'	10	96¾	4	2⅛	3¾
32	0	8- 4'	"	120¾	"	"	"
40	0	8- 5'	"	144¾	"	"	"
48	2	8- 6'	"	168¾	"	"	"
56	2	8- 7'	"	192¾	"	"	"
64	2	8- 8'	"	216¾	"	"	"
80	2	8- 10'	"	264¾	"	"	"
96	4	8- 12'	"	312¾	"	"	"
112	4	8- 14'	"	360¾	"	"	"
128	4	8- 16'	"	408¾	"	"	"
160	6	8- 20'	"	504¾	"	"	"
2½" C 6T 1½ TT- 36	0	12- 3'	12¾	99¾	4⅛	2¼	4½
48	0	12- 4'	"	123¾	"	"	"
60	0	12- 5'	"	147¾	"	"	"
72	2	12- 6'	"	171¾	"	"	"
84	2	12- 7'	"	195¾	"	"	"
96	2	12- 8'	"	219¾	"	"	"
120	2	12-10'	"	267¾	"	"	"
144	4	12-12'	"	315¾	"	"	"
168	4	12-14'	"	363¾	"	"	"
192	4	12-16'	"	411¾	"	"	"
240	6	12-20'	"	507¾	"	"	"
3" C 8T 1½ TT- 48	0	16- 3'	16⅜	100½	5¼	2¼	5⅛
64	0	16- 4'	"	124½	"	"	"
80	0	16- 5'	"	148½	"	"	"
96	2	16- 6'	"	172½	"	"	"
112	2	16- 7'	"	196½	"	"	"
128	2	16- 8'	"	220½	"	"	"
160	2	16-10'	"	268½	"	"	"
192	4	16-12'	"	316½	"	"	"
224	4	16-14'	"	364½	"	"	"
256	4	16-16'	"	412½	"	"	"
320	6	16-20'	"	508½	"	"	"
4" C 16T 1½ TT- 96	0	32- 3'	18⅜	106½	4¾	4	6¾
128	0	32- 4'	"	130½	"	"	"
160	0	32- 5'	"	154½	"	"	"
192	2	32- 6'	"	178½	"	"	"
224	2	32- 7'	"	202½	"	"	"
256	2	32- 8'	"	226½	"	"	"
320	2	32-10'	"	274½	"	"	"
384	4	32-12'	"	322½	"	"	"
448	4	32-14'	"	370½	"	"	"
512	4	32-16'	"	418½	"	"	"
640	6	32-20'	"	514½	"	"	"

WALTER DOUBLE STEM KEEL COOLERS

• EST. 1927 •

Our Most Economical Keel Cooler!

DOUBLE STEM MODEL

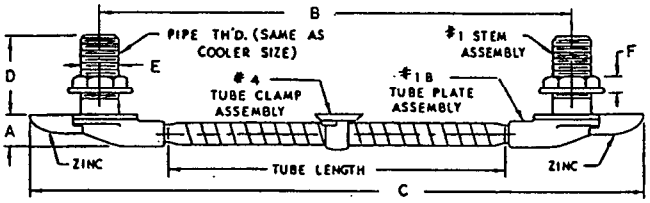

DOUBLE STEM MODELS The low prices of our double stem coolers make them a very economical keel cooling system, especially when compared with box-type coolers. The DOUBLE STEM MODEL coolers have two thru-hull fittings, one at either end of the cooler, which have standard male pipe threads equal to the cooler size number for easy connection with standard pipe fittings (3"D 8T has 3" NPT pipe connections). DOUBLE STEM MODEL coolers are available in 4, 6, 8, 12, and 16 tube configurations depending upon the size of the engine's fresh water pump; the 12 and 16 tube coolers consist of a "double stack".

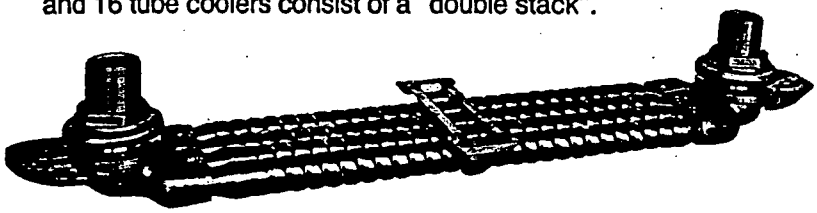

COOLER GROUP	NO. OF TUBE CLAMPS	NO. AND LENGTH PER TUBE	ZINCS (2 REQ'D)	MAX. WIDTH	A	B	C	D	E	F
2" D 4T 1½ TT- 12	0	4-3 ft.	Z-2	9⅛"	2 1/16"	44"	52¾"	3⅞"	2⅜"	15/16"
16	0	4-4 ft.	"	"	"	56"	64¾"	"	"	"
20	0	4-5 ft.	"	"	"	68"	76¾"	"	"	"
24	1	4-6 ft.	"	"	"	80"	88¾"	"	"	"
28	1	4-7 ft.	"	"	"	92"	100¾"	"	"	"
32	1	4-8 ft.	"	"	"	104"	112¾"	"	"	"
40	1	4-10 ft.	"	"	"	128"	136¾"	"	"	"
48	2	4-12 ft.	"	"	"	152"	160¾"	"	"	"
56	2	4-14 ft.	"	"	"	176"	184¾"	"	"	"
64	2	4-16 ft.	"	"	"	200"	208¾"	"	"	"
80	3	4-20 ft.	"	"	"	248"	256¾"	"	"	"
2½" D 6T 1½ TT- 18	0	6-3 ft.	Z-2	12¾"	2 3/16"	44¾"	54"	4⅛"	2⅞"	1"
24	0	6-4 ft.	"	"	"	56¾"	66"	"	"	"
30	0	6-5 ft.	"	"	"	68¾"	78"	"	"	"
36	1	6-6 ft.	"	"	"	80¾"	90"	"	"	"
42	1	6-7 ft.	"	"	"	92¾"	102"	"	"	"
48	1	6-8 ft.	"	"	"	104¾"	114"	"	"	"
60	1	6-10 ft.	"	"	"	128¾"	138"	"	"	"
72	2	6-12 ft.	"	"	"	152¾"	162"	"	"	"
84	2	6-14 ft.	"	"	"	176¾"	186"	"	"	"
96	2	6-16 ft.	"	"	"	200¾"	210"	"	"	"
120	3	6-20 ft.	"	"	"	248¾"	258"	"	"	"
3" D 8T 1½ TT- 24	0	8-3 ft.	Z-3	16⅜"	2⅛"	47¼"	60⅜"	6"	3⅝"	1⅛"
32	0	8-4 ft.	"	"	"	59¼"	72⅜"	"	"	"
40	0	8-5 ft.	"	"	"	71¼"	84⅜"	"	"	"
48	1	8-6 ft.	"	"	"	83¼"	96⅜"	"	"	"
56	1	8-7 ft.	"	"	"	95¼"	108⅜"	"	"	"
64	1	8-8 ft.	"	"	"	107¼"	120⅜"	"	"	"
80	1	8-10 ft.	"	"	"	131¼"	144⅜"	"	"	"
96	2	8-12 ft.	"	"	"	155¼"	168⅜"	"	"	"
112	2	8-14 ft.	"	"	"	179¼"	192⅜"	"	"	"
128	2	8-16 ft.	"	"	"	203¼"	216⅜"	"	"	"
160	3	8-20 ft.	"	"	"	251¼"	264⅜"	"	"	"
3½" D 12T 1½ TT- 36	0	12-3 ft.	Z-3	12¾"	3 11/16"	47⅞"	62"	6¾"	4⅛"	1¼"
48	0	12-4 ft.	"	"	"	59⅞"	74"	"	"	"
60	0	12-5 ft.	"	"	"	71⅞"	86"	"	"	"
72	1	12-6 ft.	"	"	"	83⅞"	98"	"	"	"
84	1	12-7 ft.	"	"	"	95⅞"	110"	"	"	"
96	1	12-8 ft.	"	"	"	107⅞"	122"	"	"	"
120	1	12-10 ft.	"	"	"	131⅞"	146"	"	"	"
144	2	12-12 ft.	"	"	"	155⅞"	170"	"	"	"
168	2	12-14 ft.	"	"	"	179⅞"	194"	"	"	"
192	2	12-16 ft.	"	"	"	203⅞"	218"	"	"	"
240	3	12-20 ft.	"	"	"	251⅞"	266"	"	"	"
4" D 16T 1½ TT- 48	0	16-3 ft.	Z-3	16⅜"	3⅞"	48¼"	63¼"	7 7/16"	4⅝"	1¼"
64	0	16-4 ft.	"	"	"	60¼"	75¼"	"	"	"
80	0	16-5 ft.	"	"	"	72¼"	87¼"	"	"	"
96	1	16-6 ft.	"	"	"	84¼"	99¼"	"	"	"
112	1	16-7 ft.	"	"	"	96¼"	111¼"	"	"	"
128	1	16-8 ft.	"	"	"	108¼"	123¼"	"	"	"
160	1	16-10 ft.	"	"	"	132¼"	147¼"	"	"	"
192	2	16-12 ft.	"	"	"	156¼"	171¼"	"	"	"
224	2	16-14 ft.	"	"	"	180¼"	195¼"	"	"	"
256	2	16-16 ft.	"	"	"	204¼"	219¼"	"	"	"
320	3	16-20 ft.	"	"	"	252¼"	267¼"	"	"	"

NEGLIGIBLE DRAG FROM WALTER • EST. 1927 • KEEL COOLERS

Due to the streamlined design of WALTER Keel Coolers, speed loss due to drag is much less than generally assumed by the average boat owner, and much less than with bulky box-type keel coolers. To determine the actual speed loss, we conducted a test on a planing hull powered by two 200 H.P. V-8 engines before and after installation of two 1"E 4T 1-1/8F-24 (Size 1" End Model 4 tube coolers with 24 feet of tubing) WALTER Keel Coolers. Under the same conditions (four full 50 gallon fuel tanks, operator and timer aboard), the boat was tested over the measured statute mile. Results of this test are as follows:

ENGINE RPM	WITHOUT KEEL COOLERS	WITH KEEL COOLERS
2800 RPM	16.48 mph	16.40 mph
3300 RPM	20.85 mph	20.62 mph
4000 RPM	25.40 mph	25.25 mph

Only a .15mph loss of boat speed at 25 mph with two WALTER Keel Coolers!

1"E 4T 1-1/2TT
(Size 1" End Model 4 Tube Cooler)

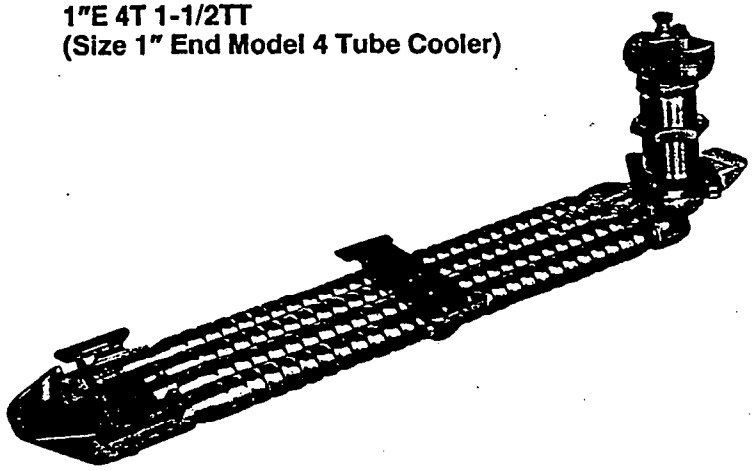

WALTER • EST. 1927 • REFRIGERANT KEEL COOLERS

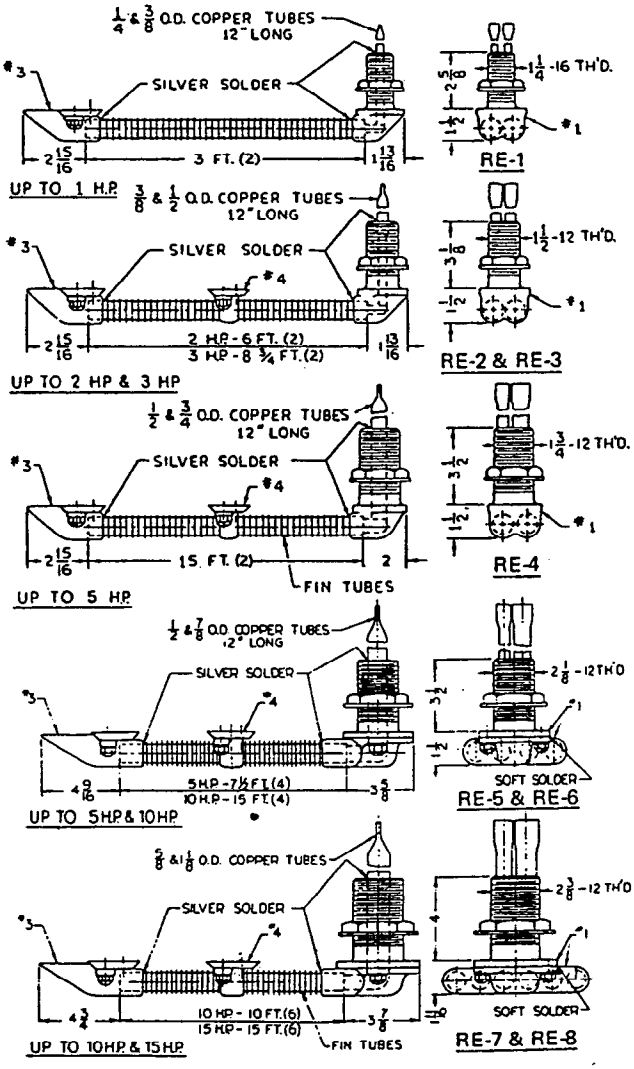

WALTER Refrigerant Keel Coolers are efficient and completely reliable for cooling marine refrigeration and air conditioning equipment. The refrigerant (freon) is pumped directly through the cooler by the compressor where it is cooled by the outside sea water. Troublesome strainers and raw water pumps are completely eliminated. 90-10 cupro/nickel finned tubing and monel fastenings ensure reliable operation. All joints are silver soldered, high pressure tested, and then the system is dehydrated.

RE-1

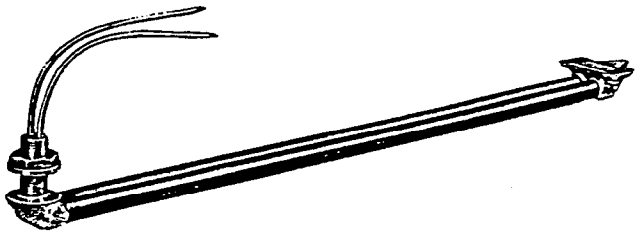

Recommendations

REFRIGERANT KEEL COOLERS

GROUP #	Suitable for up To	Size copper tube connections inside boat	Amount tubing required	#4 Tube clamps required
RE-1	1 H.P.	¼" & ⅜"	6 ft. (2 pcs. 3')	0
RE-2	2 H.P.	⅜" & ½"	12 ft. (2 pcs. 6')	1
RE-3	3 H.P.	⅜" & ½"	17½ ft. (2 pcs. 8¾')	1
RE-4	5 H.P.	½" & ¾"	30 ft. (2 pcs. 15')	2
RE-5	5 H.P.	½" & ⅞"	30 ft. (4 pcs. 7½')	1
RE-6	10 H.P.	½" & ⅞"	60 ft. (4 pcs. 15')	2
RE-7	10 H.P.	⅝" & 1⅛"	60 ft. (6 pcs. 10')	1
RE-8	15 H.P.	⅝" & 1⅛"	90 ft. (6 pcs. 15')	2

THER WALTER PRODUCTS...

• EST. 1927 •

V-DRIVES

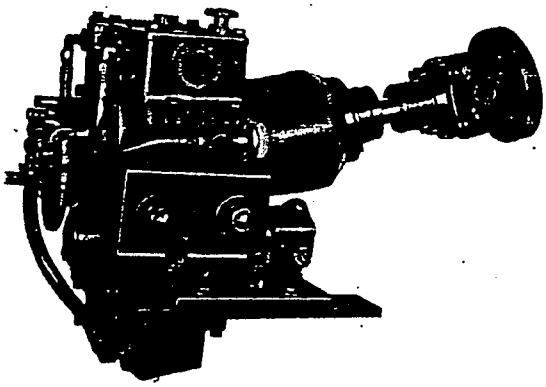

GEAR DRIVES

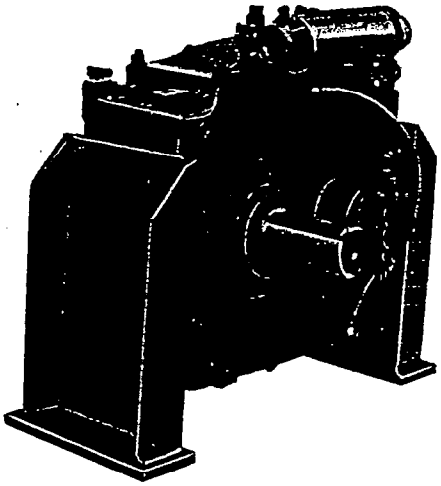

COUPLINGS

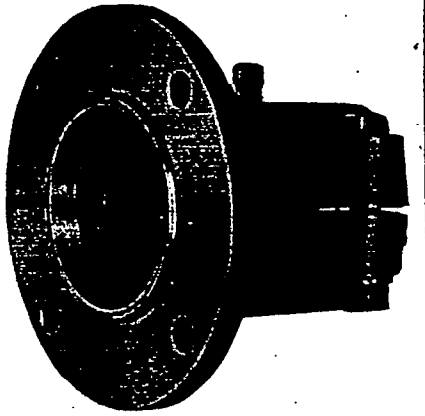

LIMITED WARRANTY

WALTER Keel Coolers are warranted against defective material or workmanship for a period of twelve months from date of delivery. The Walter Machine Co., Inc. obligation under this warranty is limited to replacement or repair of any defective material when returned prepaid to our factory in Jersey City, and shall be subject to our inspection and verification of claim. This warranty will not apply to any failure which results from accident, neglect, sinking, abuse, abnormal service, lack of maintenance, or improper installation or service. This warranty will not apply to haul-out, labor, launch, towing or storage charges, mechanic travel time, inconvenience, loss of time or income, removal and replacement and/or modification of any boat parts to facilitate repairs. The Walter Machine Co., Inc. will not accept responsibility for contingent liability through failure of any complete unit or part.

THE WALTER MACHINE COMPANY, INC.

• EST. 1927 •

P.O. BOX 7700, 84-98 CAMBRIDGE AVE.
JERSEY CITY, NEW JERSEY 07307
U.S.A.

TELEPHONE: (201) 656-5654
TELEFAX: (201) 656-0318
TELEX: 12065 WALTERCO JCTY

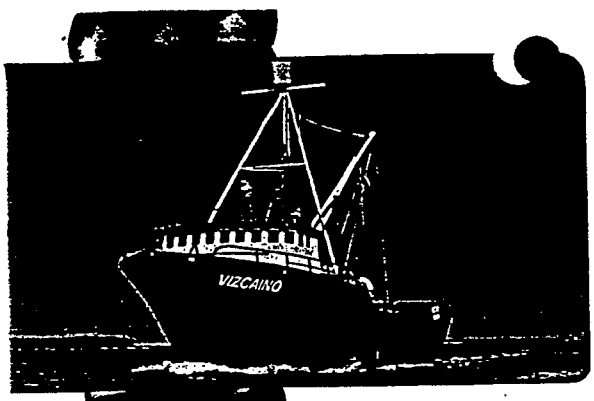

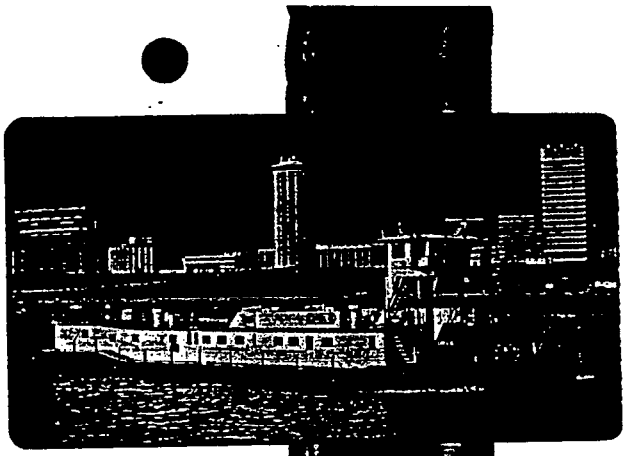

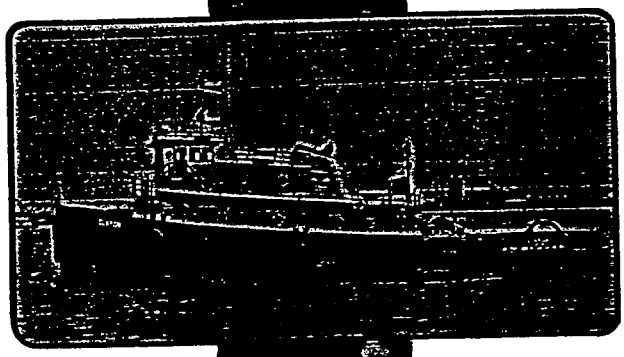

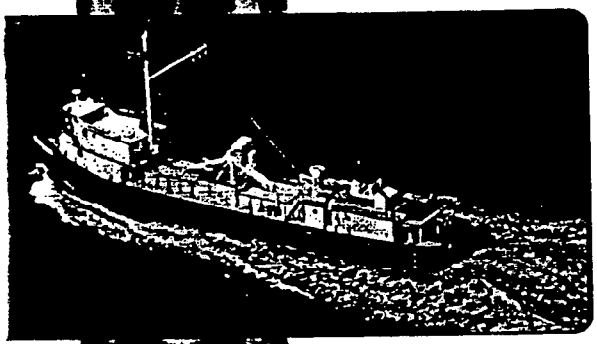

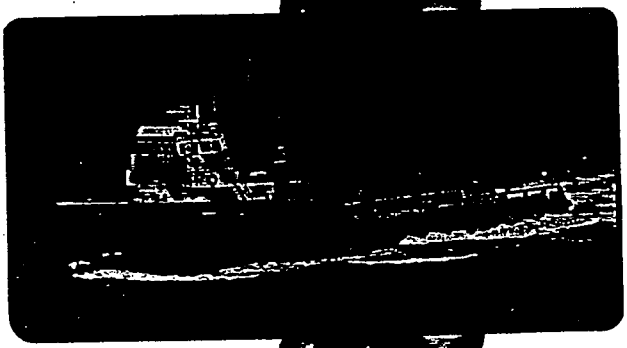

Johnson® DURAMAX®

Spiral Tube Keel Coolers

Positive Cooling Protection For Ship Engines At All Operating Levels

DURAMAX® KEEL COOLERS

THE ADVANCED OUTBOARD COOLERS FOR OWNERS AND BUILDERS WHO WANT ALL THE PROTECTION THEY CAN GET

To provide the most advantages available in a modern outboard cooler, including cost savings, Johnson engineers have incorporated important design innovations in the Duramax Keel Cooler. Of these, the most distinguishing and unique is the use of 90/10 cupro-nickel spiral tubes in a compact, easily mounted modular arrangement for the heat exchanger. The superior heat transfer capacity of spiral tubes ensures optimum cooling under the most demanding requirements of engine operation.

12 REASONS WHY DURAMAX KEEL COOLERS GIVE YOU ASSURED PROTECTION AND COST SAVINGS

Duramax Keel Coolers for cooling of main engines and auxiliary equipment on all types of vessels offer shipbuilders and owners the advantages of:

1. Superior Heat Transfer
2. Low initial cost
3. Multiple systems combined
4. Low operating cost
5. Simplified installation
6. Modular design
7. Wide range of cooling capacities
8. Custom sizing
9. Demountable tubes
10. Electrolysis protection plus corrosion resistant components
11. Expandable capacity
12. No through-the-hull fittings

Johnson Duramax outboard coolers provide a superior alternative to channel steel and conventional straight tubing coolers in terms of:

Efficient Heat Transfer: The helical flow motion imparted to the coolant by the spiral configuration of Duramax tubing creates turbulence which greatly reduces the heat transfer inefficiencies common to conventional smooth-wall tubing. Also, Duramax Sprial Tubes provide greater cooling surface area than plain tubing. As a result, Duramax Keel Coolers offer greater cooling efficiency than conventional straight tube systems and take less hull space for maximum cooling.

Low Initial Cost: Duramax Keel Coolers generally cost less than channel steel coolers, often by substantial amounts. The potential for savings in both labor and materials costs are shown on page 8.

Multiple Systems Combined: Through the additional feature of separators, coolant flow may not only be manipulated for higher and lower coolant velocities resulting in more efficient heat transfer, Johnson-Duramax Coolers can, in many cases, be broken into multiple systems eliminating the cost for additional headers — a substantial savings in initial construction costs, materials and space. See pages 4 and 5 for cost-saving combinations.

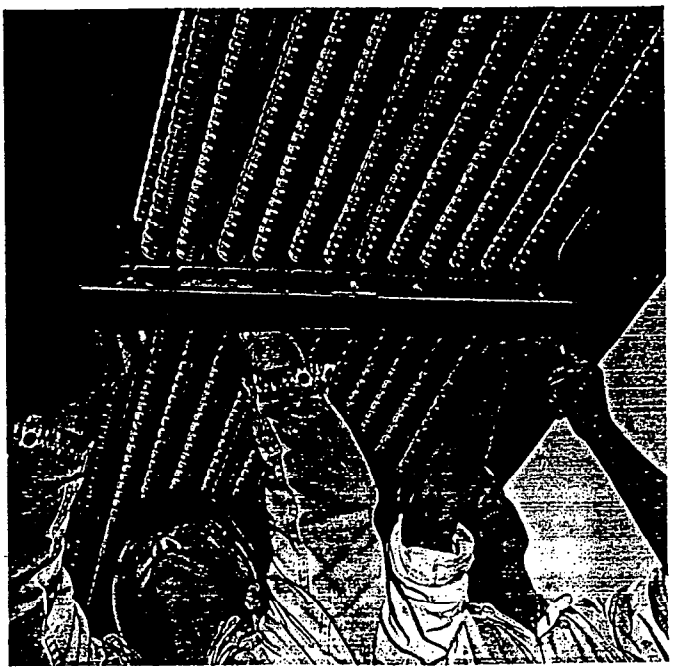

Workmen bolt in bottom Support Bracket on 12 tube double bank Spiral Tube Cooler. See page 8 for cost savings comparisons.

®Johnson and Duramax are Registered Trademarks.
©Copyright — The Johnson Rubber Co. 1978

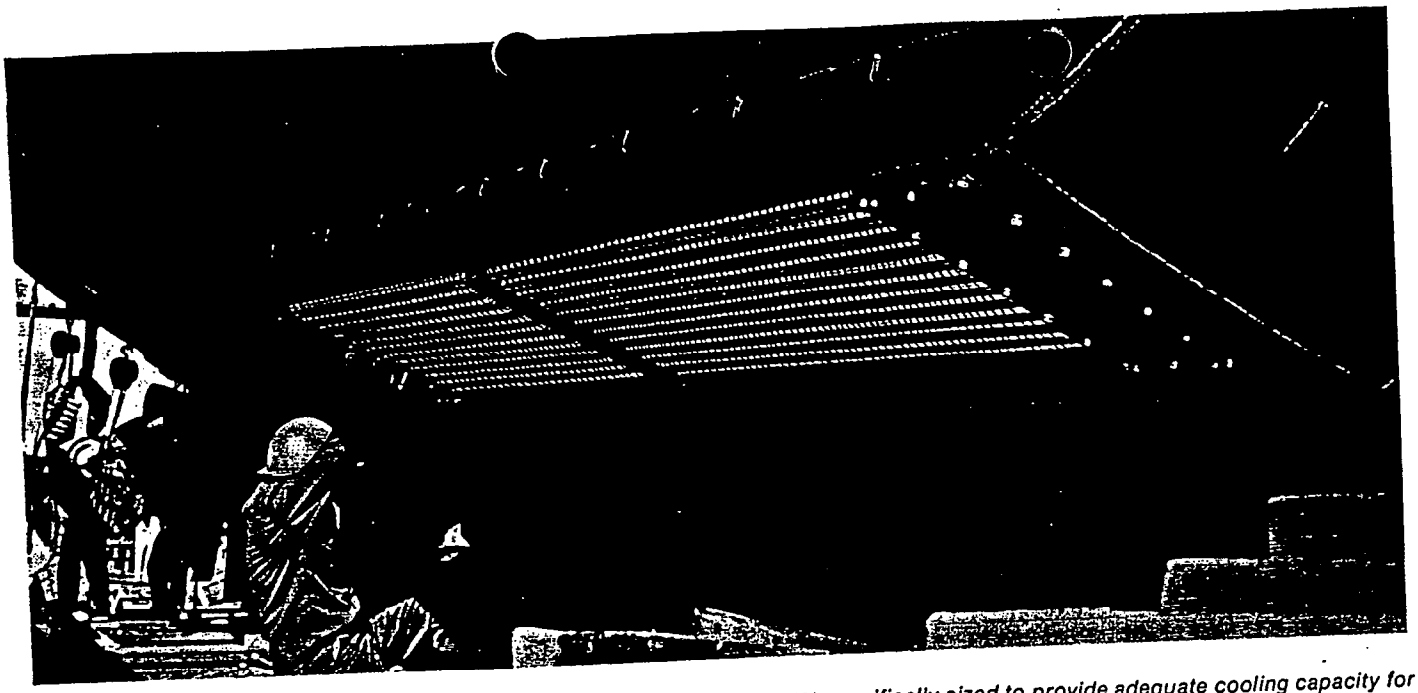

Spiral tube units have (1) flexibility to conform with hull contour, and are (2) specifically sized to provide adequate cooling capacity for main engines and auxiliary equipment under "worse case" conditions unless otherwise specified by customer.*

*(Minimum knots, maximum water temperatures at full RPM.)

Low Operating Cost: Reduction in operating costs is realized from improved operating efficiency obtained through reduction of drag and weight. The weight difference can be significant. For example, a cooling system made of channel steel would weigh approximately 39,000 pounds compared with slightly less than 1,200 pounds for a Duramax Sprial Tube Cooler producing the same amount of cooling.

Simplified Installation: Pre-fitted system components are quickly and easily assembled, generally in one-fourth to one-tenth of the time required to install channel steel keel coolers.

Modular Design: Standardized components enable the construction of Duramax Keel Coolers of the required cooling capacity.

Range of Cooling Capacities: Availability of tubes in a range of lengths together with flexibility in the configuration and number of their arrangement provide means for meeting capacity requirements.

Custom Sizing: Johnson Duramax Keel Coolers are sized to individual application. Computerized sizing ensures the selection of correct cooling capacity for maximum engine loads and total operating efficiency. The simplified selection procedure used for Duramax Keel Coolers is described on pages 12 and 13 of this brochure.

Demountable Tubes: Individually demountable tubes facilitate cleaning or replacement if ever damaged. The system can be readily expanded at any time if additional equipment requiring cooling is later installed on the vessel. The original cooler usually need not be replaced. For instance, a single bank system can be expanded to a double system without changing piping and/or header locations.

Electrolysis Protection: System is fully grounded with the use of a special support bracket to reduce electrolysis between heat exchanger components and vessel.

Saves Inboard Fittings: The Duramax Keel Cooler does not use through-the-hull fittings, which simplifies and speeds installation and eliminates the need for inboard sea chest.

Protective Shielding: Protective shielding is recommended for all Duramax Keel Cooler installations. The type of shielding required depends on the service conditions the vessel will meet. For example, the tube protection for vessels operating on seas amid floating ice has to be more substantial than for vessels that may churn up shells or small debris from harbor bottoms.

Also, location of the cooler on the hull will influence the type of protection that is to be used. Preferred locations for keel coolers are in protective areas of the hull (rake for example). If bow thrusters require their coolers to be located in the bow, they must be fully protected from pounding seas. When coolers are situated near the plane of rotation of the vessel's screws, protection from cavitation should be provided.

MULTIPLE SYSTEMS COMBINED

SAMPLES OF MULTIPLE SYSTEMS COMBINED

Caterpillar D379TA 565 BHP @ 1225 RPM at 2 Knots

A. JACKET WATER RECOMMENDATIONS:

1. Inlet-outlet plumbing same end: DC-1202-05-11
2. Inlet-outlet plumbing at opposite ends:..... DC-402-15-06

B. SEPARATE AFTERCOOLER

1. Inlet-outlet plumbing same end: DC-402-12-15
2. Inlet-outlet plumbing opposite ends:..... DC-601-16-03

C. COMBINING SYSTEMS A1 and B1, A2 and B2.

1. Inlets-outlets plumbing same end: DC-1202-10-44
2. Inlets-outlets plumbing opposite ends:..... DC-1201-18-28

C1 DURAMAX COOLER MODEL 1202-10-44

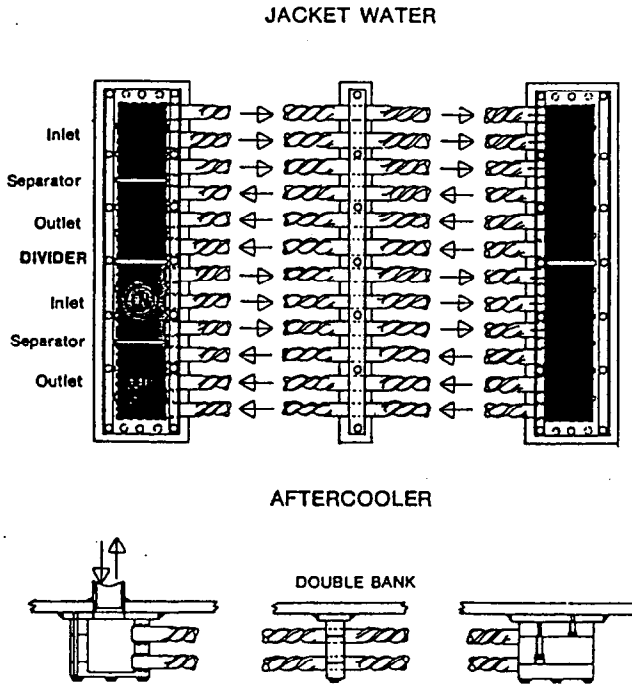

- A savings of 15+% in net costs of Coolers
- INSTALLATION COSTS CUT IN HALF
- 40% savings in required hull area

C2 DURAMAX COOLER MODEL 1201-18-28

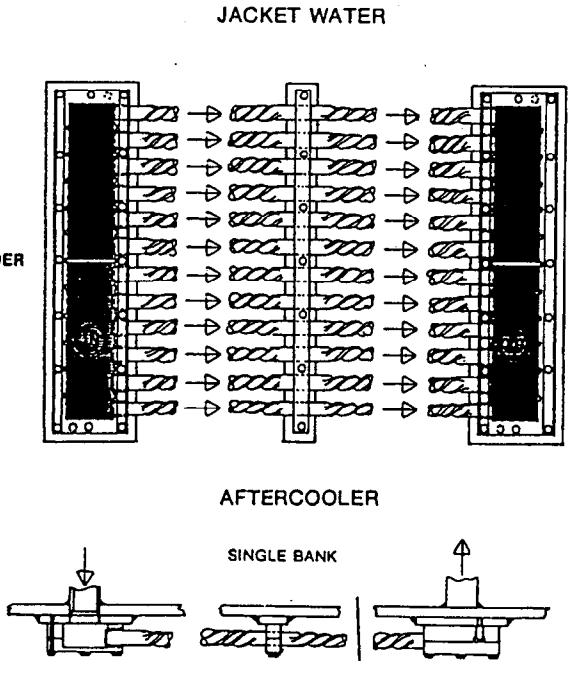

- A savings of 7+% in net cost of Coolers
- INSTALLATION COSTS CUT IN HALF
- 25% savings in required hull area

Through the additional feature of separators, coolant flow may not only be manipulated for higher and lower coolant velocities resulting in more efficient heat transfer, Johnson Coolers can, in many cases, be broken into multiple systems eliminating the cost for additional headers — a substantial savings in initial construction costs, materials and space.

SAMPLES OF MULTIPLE SYSTEMS COMBINED

DETROIT DIESEL **ENGINE** 12V-71 340SHP @ 1800 RPM

A. RECOMMEND

1. Inlet-outlet plumbing at same end: DC-1201-05-11
2. Inlet-outlet plumbing at opposite ends:..... DC-601-10-02

DETROIT DIESEL **GENERATOR** 8V-71 200KW @ 1800 RPM

B. RECOMMEND

1. Inlet-outlet plumbing at same end: DC-601-12-12
2. Inlet-outlet plumbing at opposite ends:..... DC-601-12-02

C. COMBINING SYSTEMS A1 and B1, A2 and B2

1. Inlets-outlets plumbing at same end:..... DC-1202-06-42
2. Inlets-outlets plumbing at opposite ends:..... DC-1201-12-24

C1 DURAMAX COOLER MODEL DC-1202-06-42

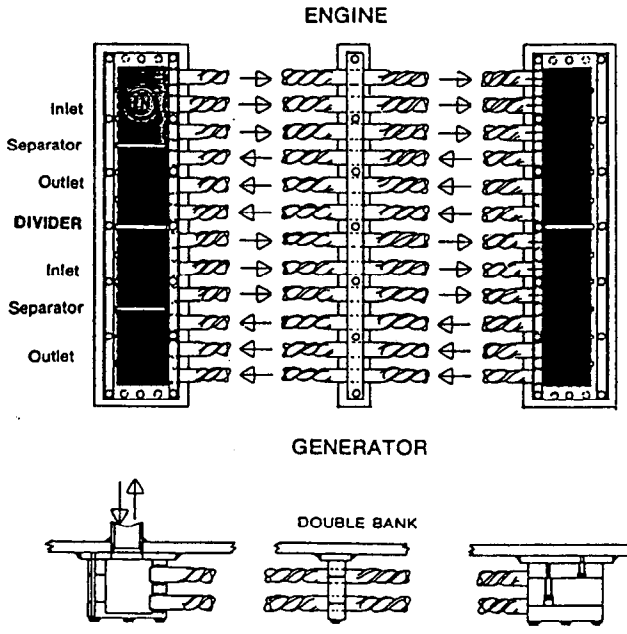

- A savings of 4+% in net costs of Coolers
- INSTALLATION COSTS CUT IN HALF
- 60% savings in required hull space

C2 DURAMAX COOLER MODEL DC-1201-12-24

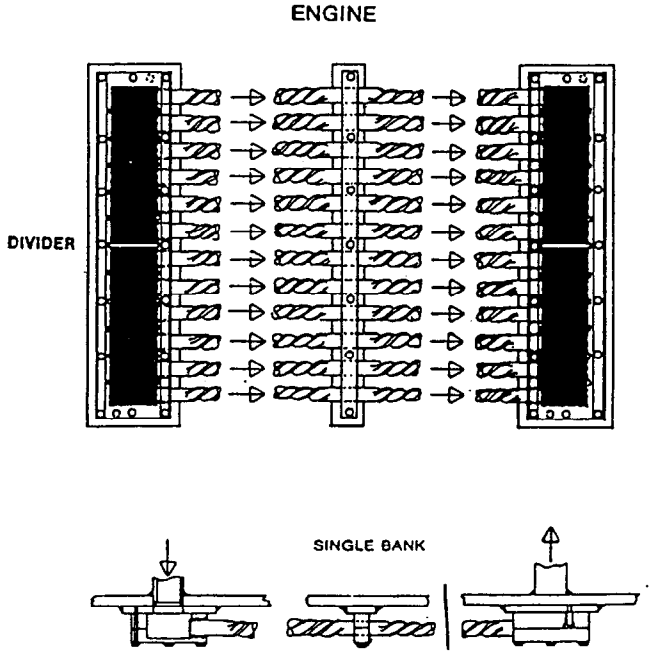

- A savings of 6+% in net costs of Coolers
- INSTALLATION COSTS CUT IN HALF
- 30% savings in required hull space

UNIQUE COMPONENTS FOR SUPERIOR PERFORMANCE

To deliver long-term performance with total effectiveness, Johnson introduced important design innovations in its Duramax outboard keel cooler. The spiral tubes which provide more surface area and create a turbulent flow to boost the tube's heat transfer capabilities, is the heart of its cooler system. The tubes, of tough 90/10 cupro-nickel alloy, are light in weight and have excellent resistance to corrosive and erosive effects of seawater.

Spiraled tubing produces a forced helical motion to the coolant flow. Resulting in a turbulent action that extracts heat almost twice as efficiently as a smooth-walled grid. The spiraled tubing affords the bending strength of thicker tubing, yet allows the flexure needed to follow hull contours without significant stress.

Headers are molded rubber over a solid bronze insert, fitted internally with adjustable separators which clamp the cooling tubes in any desired combination of groupings. Units are available in four, six, eight, twelve, sixteen and twenty-four tube systems.

Stud plates for attachment to the hull are 3/4-in. steel plate, supplied drilled and tapped. Special stainless washer-head bolts are provided for single or double-bank assemblies. No through-hull fittings are required.

STUDPLATES (2). *Plates 3/4-in. thick of mild steel (SAE 1010 - 1020) are welded to hull. They are tapped for 3/8-in. 18-8 stainless steel bolts with washers, for mounting deckheader assemblies.*

TOP DECKHEADS (2). *Solid cast bronze frames have molded nitrile rubber bonded to surface for sealing and protection.*

INTERDECKS. *For double-bank units, or expansion. Nitrile rubber-covered bronze interdeck can be placed between upper and lower decks, providing for an additional bank of heat-exchange tubing. Cooling capacity can thus be doubled with minimum cost and labor.*

BOTTOM DECKHEADS (2). *Nitrile-covered cast bronze boxes mate with top deckhead or interdecks to form an enclosed header with tubes clamped between.*

TUBING. *Spiraled tubing of 90/10 cupro-nickel, available in 1-ft. increments from 3-ft. to 20-ft. lengths. Tube ends are round, and are fitted with nitrile rubber sleeve seals.*

SLEEVE SEALS. *Nitrile sleeves have raised beading which compresses to form a seal in the header tube openings for watertight integrity.*

SEPARATORS. *To manipulate flow and provide separate cooling of main engines and auxiliaries, headers may be compartmented using rubber-coated steel partitions which fit into slots located between all tubes.*

SUPPORT BRACKETS. *Support structure of steel studplate and nitrile-covered mating brackets, for tubing support between headers. One grounding type support bracket is supplied with each cooler.*

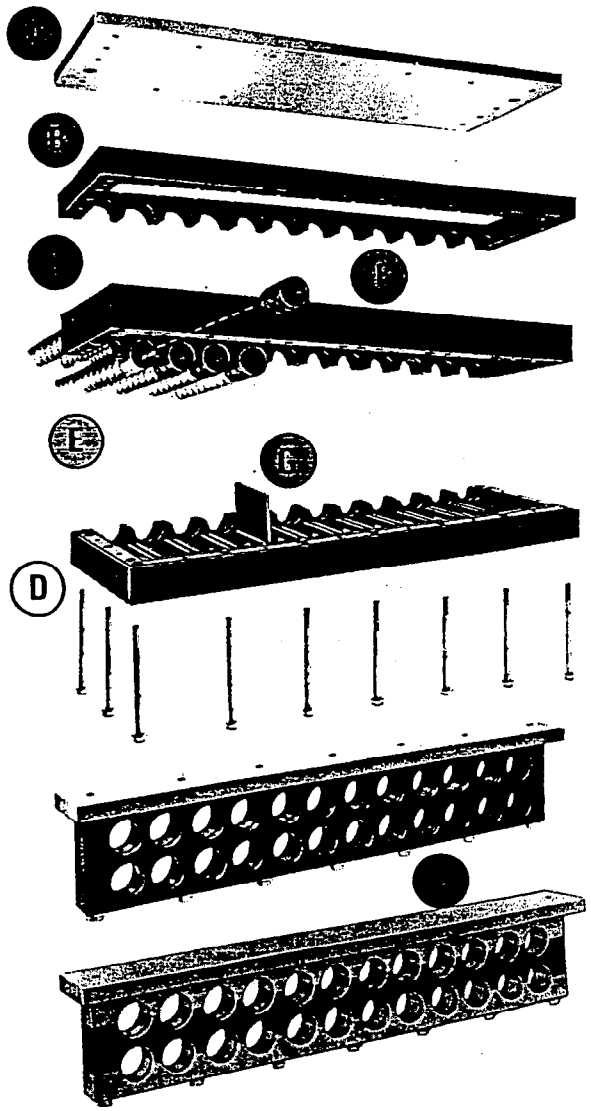

The 212-ft. "Ocean Marlin" offshore supply vessel built by American Marine Corporation, New Orleans, La., for Ocean Marine Service, Inc., Houston, Texas, is equipped with Duramax Spiral Tube Coolers in a series of 24-tube, double-bank units for cooling the main engines, and a series of various units for bow thruster, generators, winch engines and air conditioning compressors.

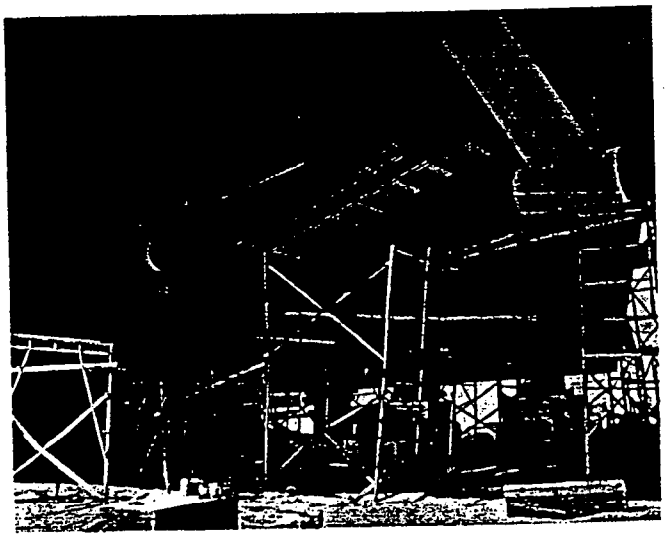

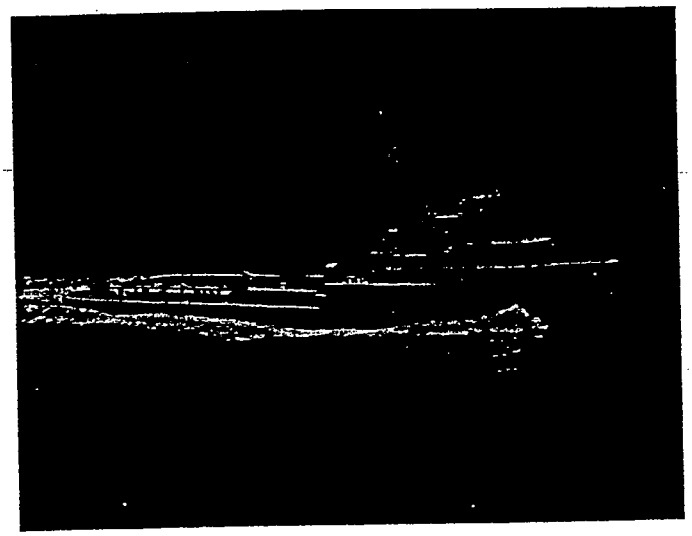

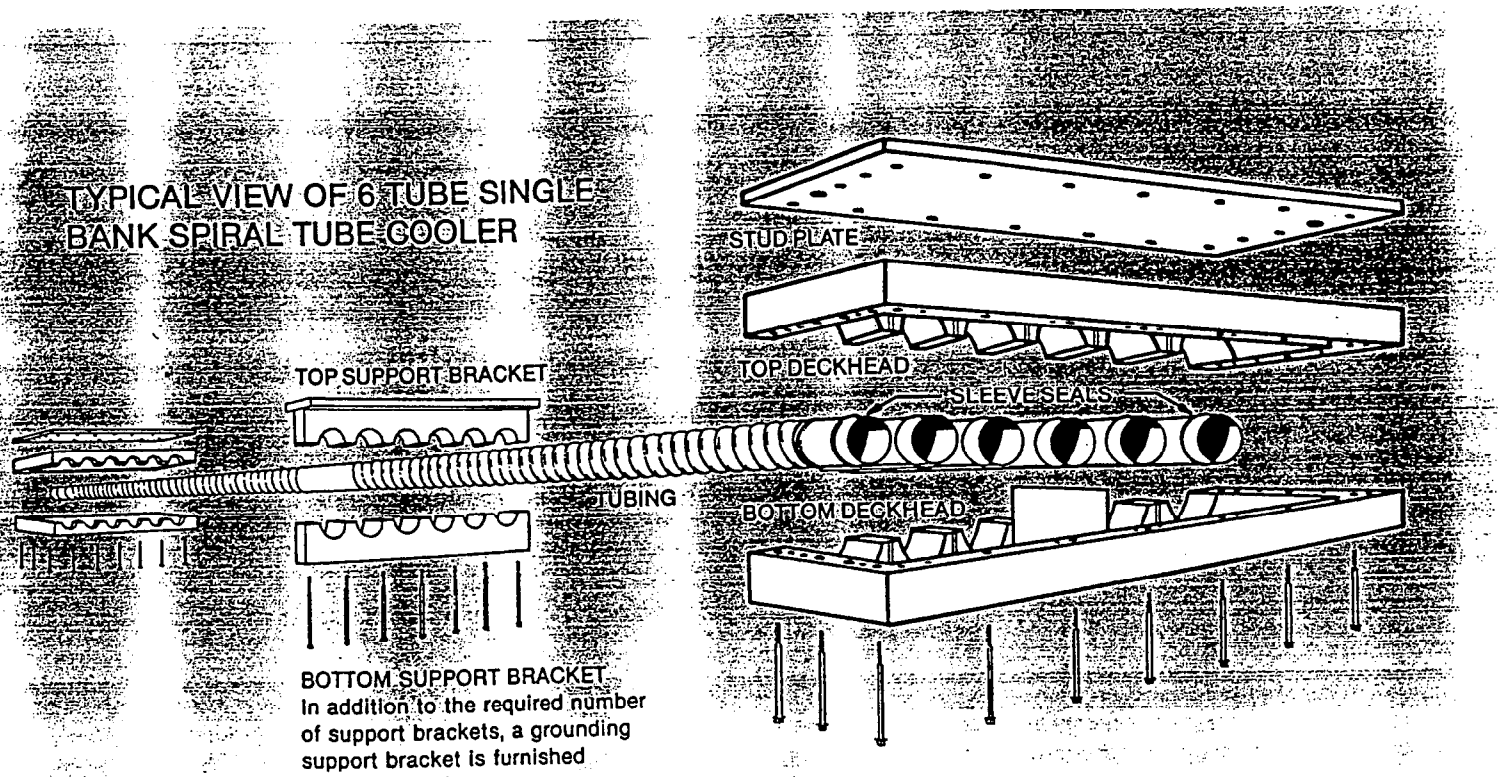

ENGINEERED FOR FAST ECONOMICAL INSTALLATION

Installation of the Duramax Keel Cooler is fast and inexpensive compared to the time and cost spent on weld fabricating a keel cooler from channel steel. See cost comparisons in table below. Welding on Duramax Coolers is limited to joining stud plates to the hull. The remaining operations consist essentially of assembling the headers and tubes, and tightening the assembly bolts, which fasten to pre-threaded holes in the stud plates.

Water pipes to the inlet and outlet of the heat exchanger are welded to openings in the hull, thereby eliminating through-the-hull fittings and inboard sea chest.

As shown here, key to quick assembly and maintenance is the use of nitrile sleeves which compress

COMPARISON OF TYPICAL INSTALLATION COSTS AND MATERIAL/LABOR REQUIREMENTS FOR CHANNEL STEEL COOLER VS. DURAMAX KEEL COOLER

	Caterpillar		General Motors		Wichmann	
Engine BHP @ RPM:	1000 @ 1225		2500 @ 900		3000 @ 800	
Cooler Sized at Vessel Speed of:	4 Knots		4 Knots		4 Knots	
Heat Rejection to Coolant:	45,800 $\frac{BTU}{Min}$		90,200 $\frac{BTU}{Min}$		45,850 $\frac{BTU}{Min}$	
Fresh Water Pump Flow:Gal/Min	380		965		317	
Water Temperature to Cooler	185° F		180° F		170° F	
Water Temperature from Cooler	170° F		168° F		152° F	
Max. Anticipated Sea Water Temp.	85° F		85° F		90° F	
	CHANNEL STEEL	**DURAMAX KEEL COOLER**	**CHANNEL STEEL**	**DURAMAX KEEL COOLER**	**CHANNEL STEEL**	**DURAMAX KEEL COOLER**
Linear Feet	334 ft.	144 ft.	834 ft.	288 ft.	1000 ft.	216 ft.
Weight of Material	7,682 lb.	894 lb.	19,182 lb.	1150 lb.	22,993 lbs.	1120 lbs.
Hull Space Required	503 ft.²	35 ft.²	1,275 ft.²	35 ft.²	1500 ft.²	28 ft.²
Additional Surface Area Exposed to Drag	167 ft.²	25 ft.²	424 ft.²	25 ft.²	500 ft.²	25 ft.²
Coolant Needed to Supply System, Gallons (pounds)	625 gal. (4,680 lb.)	20 gal. (150 lb.)	1,560 gal. (13,000 lb.)	34 gal. (280 lb.)	1870 gal. (14,004 lbs.)	30 gal. (247 lbs.)
Total Weight of System	12,362 lb.	1044 lb.	32,182 lb.	1,430 lb.	36,997 lbs.	1,367 lbs.
Cost of Materials (Steel - 25¢/lb.)	$1,920.00	$2,060.00 (Cooler) $ 240.00 (Shroud)	$4,795.00	$3,350.00 (Cooler) $ 250.00 (Shroud)	$5,751.00	$3,381.00 (Cooler) $ 250.00 (Shroud)
Cost of Labor (Welders, laborers, overhead @ $6.00/ft.)	$2,004.00	$ 400.00	$5,004.00	$ 400.00	$6,000.00	$ 400.00
TOTAL COST	**$3,924.00**	**$2,700.00**	**$9,799.00**	**$4,000.00**	**$11,751.00**	**$4,031.00**

to form a watertight seal between tubing and headers. This method of connecting tubes to heads eliminates the use of unwieldy permanently assembled structures.

Combinations of single-bank units of 4, 6, 8, or 12 tubes or double-bank units of 8, 12, 16, or 24 tubes are available to match cooling capacity to need. Tube length can be specified in 1-ft. increments from 3-ft. up to 20-ft. Separate or individual cooling of main engines and/or auxiliaries is readily provided by inserting partitions within the head, layered between the tubes to form separated compartments.

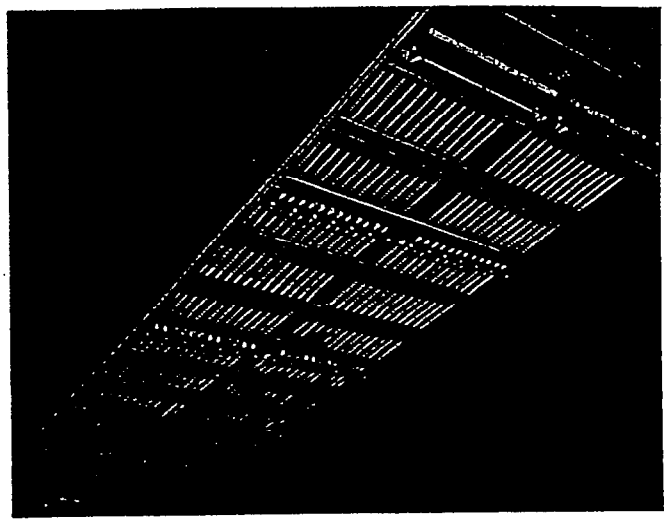

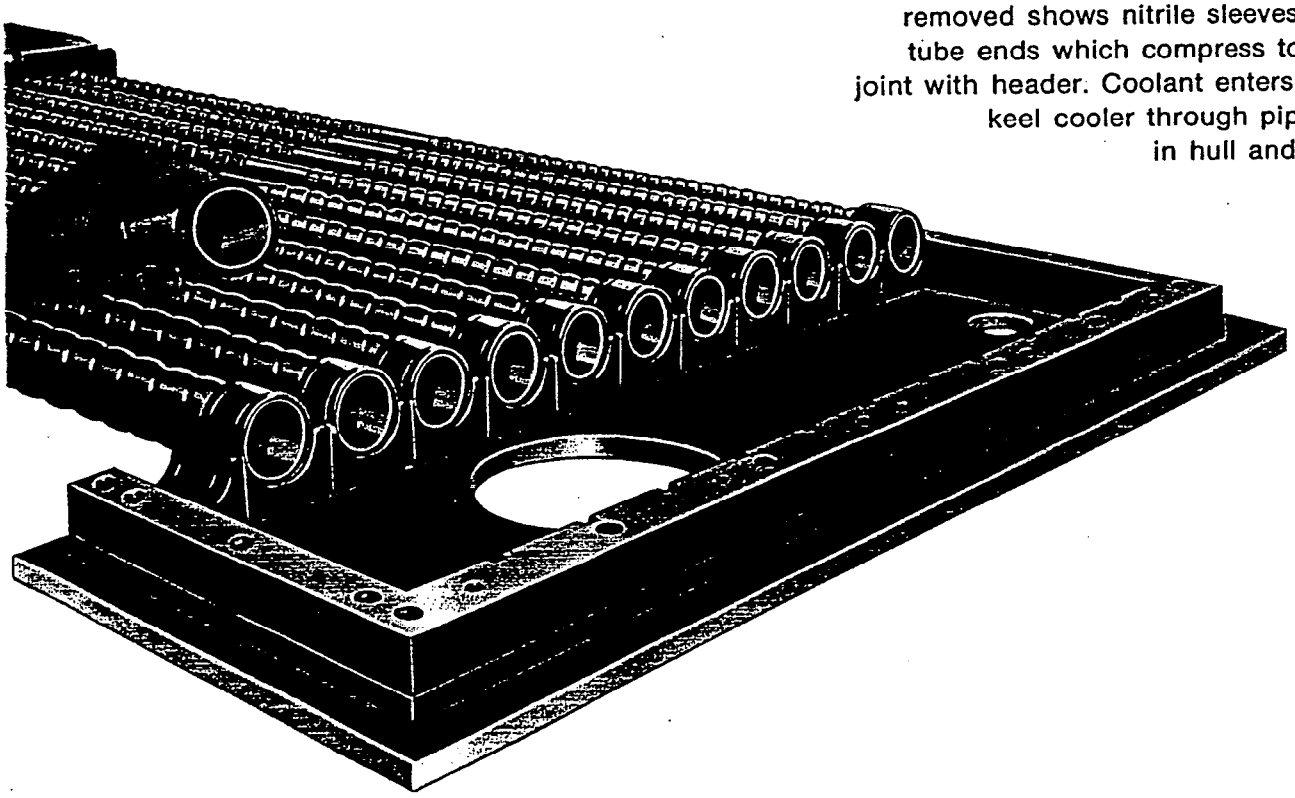

Duramax Keel Cooler with head cover removed shows nitrile sleeves fitted over tube ends which compress to form tight joint with header. Coolant enters and leaves keel cooler through pipe openings in hull and stud plate.

FLEXIBILITY OF INSTALLATION

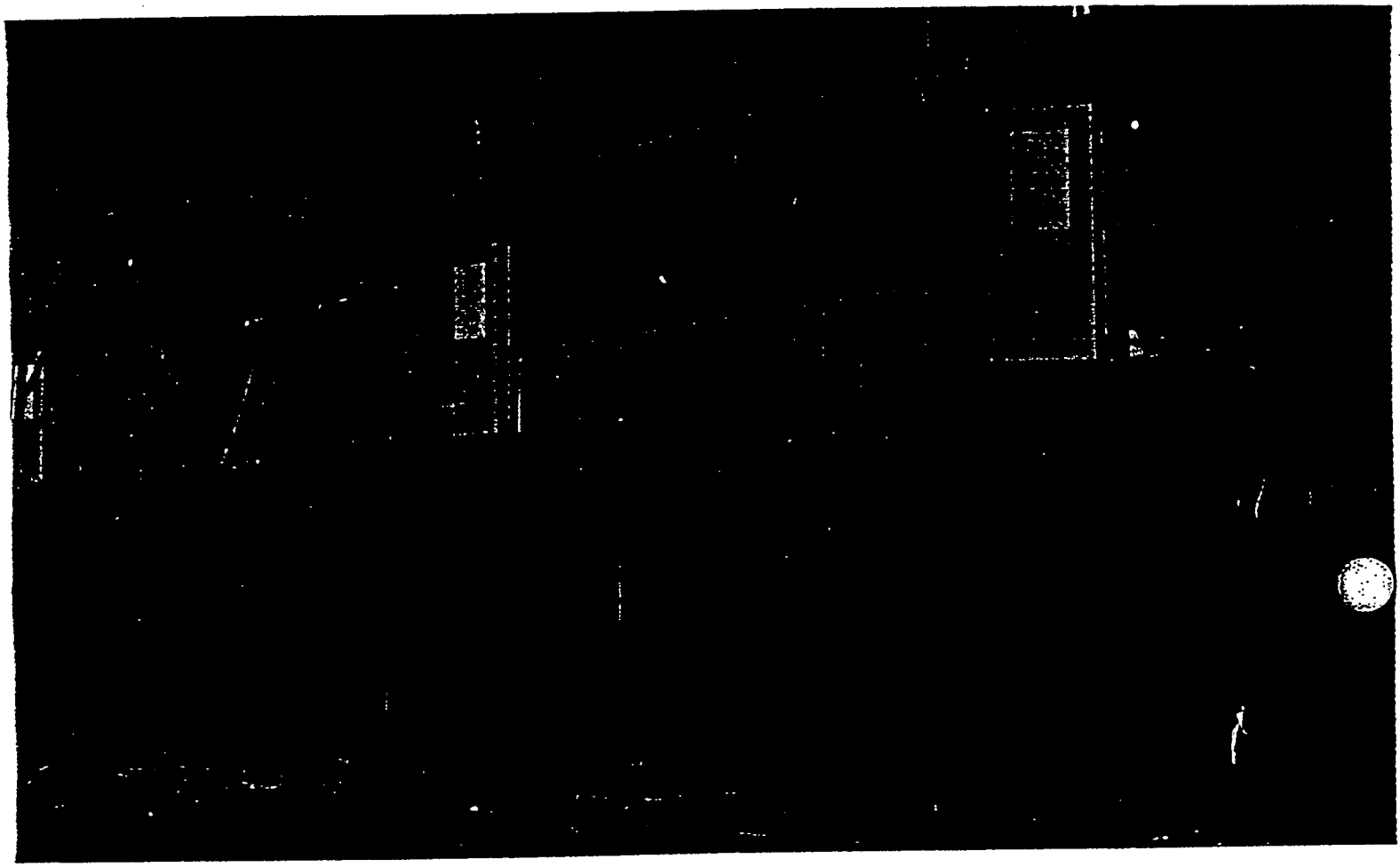

Johnson-Duramax Spiral Tube Coolers are engineered to allow for installation at various locations on the vessel's hull. The strong spiral tubes will flex depending on length of tubing, to fit hull contour. Tubing length from 3 to 20 feet, are in increments of 1 foot, Johnson's computerized method of Cooler "Sizing" to meet your vessel's requirements ensures a more precise method of Cooler selection and provides the correct cooling capacity for maximum engine loads and operating efficiency. The result is less cost for a "Cooler" that will cool more in less space.

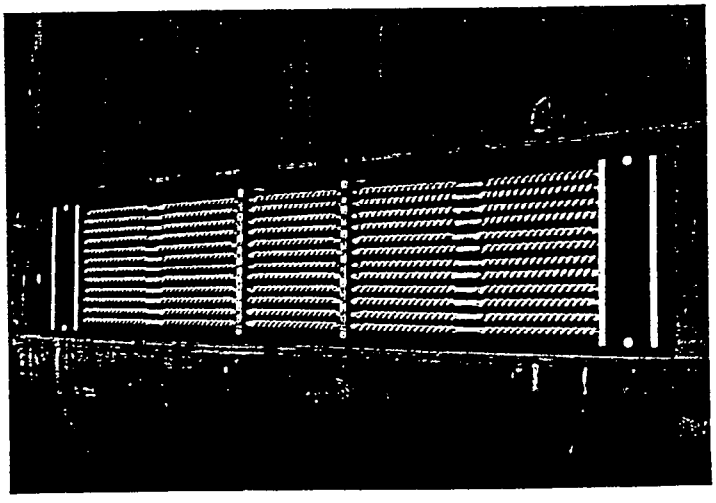

Twelve Tube Cooler — recessed into hull before protective shroud is added. Johnson Duramax Coolers are available in single bank systems of 4, 6, 8, or 12 tubes; or double bank systems of 8, 12, 16, or 24 tubes.

Photos Courtesy Skeet R. Sanders, Brent Marine Supply Co., Inc.

Sprial Tube Coolers, consisting of a series of 24 tube double bank coolers, are used on this 212-foot offshore supply vessel to cool Main Engines, Bow Thruster, Generators, Winch Engine and Air Conditioner Compressors. No through-the-hull fittings are required with Duramax Coolers, resulting in additional material and labor savings.

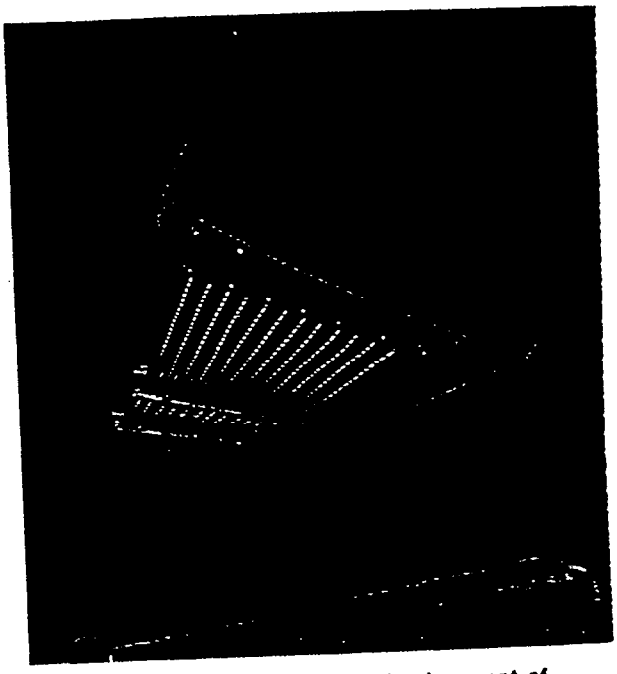

Johnson-Duramax Coolers simplify placement of cooler on the hull. Tubes allow for stress-free accommodation to hull curvature.

Varying
ng needs
erated by
vessels
erating in
ous water
'itions are
>y groups
Duramax
>iral Tube
>olers due
to their
antages of
exibility in
cement on
>ull — side
de banking
placed in
tandem.

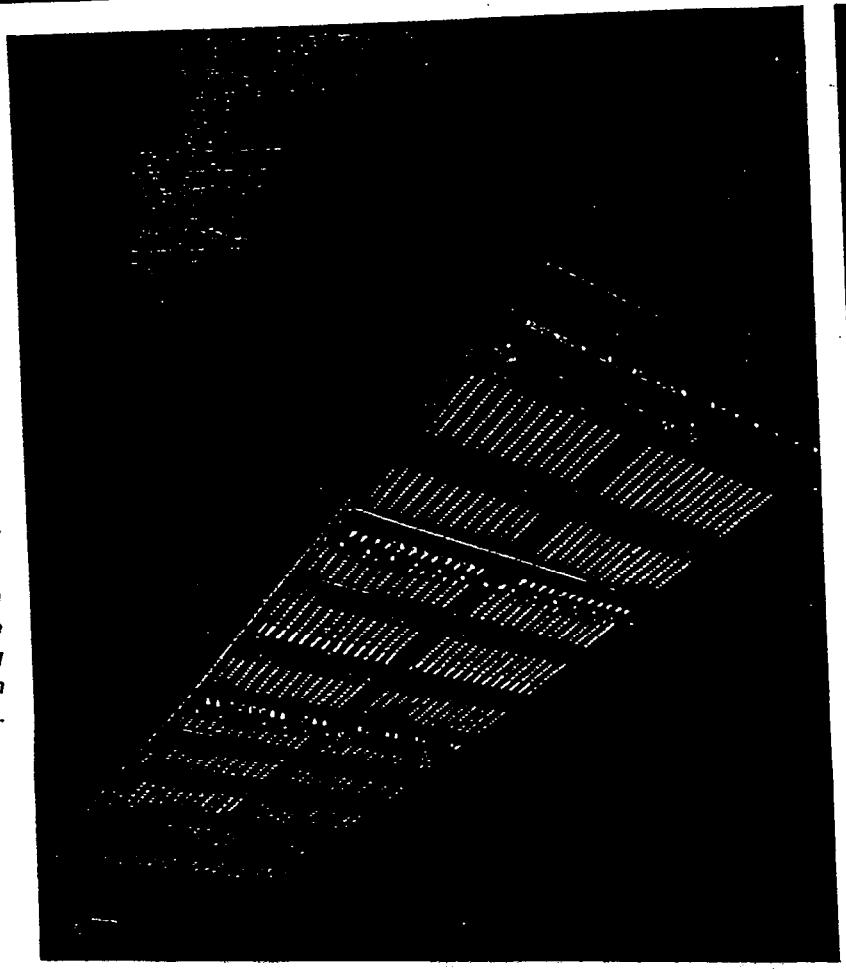

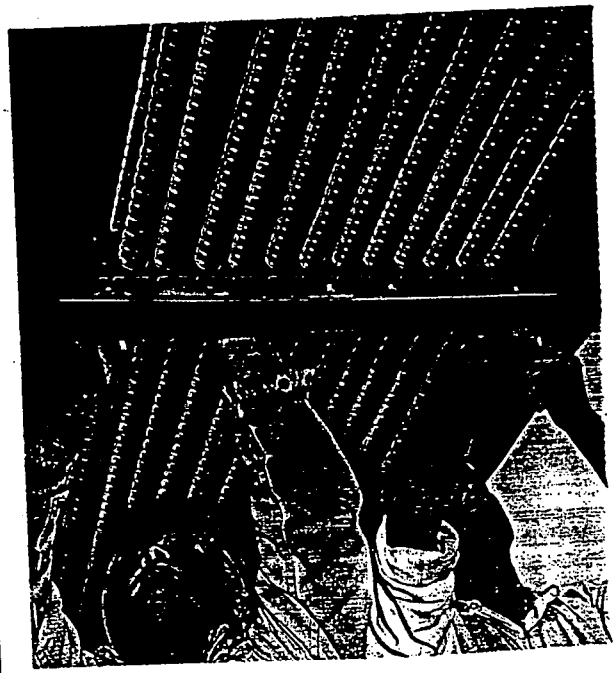

Although various types of protective shrouding are used, should a tube or tubes ever become damaged, they are easily replaced. Additionally, if auxiliary equipment requiring cooling is added, Johnson—Duramax provides for the selection of the optimum sized cooler which provides more cooling — in less space for less costs compared to ordinary straight channel.

DURAMAX KEEL COOLER SELECTION GUIDE

Determining the optimum size of Johnson Duramax Keel Cooler for a given set of operating conditions is a relatively simple procedure. Only two sets totalling five pieces of information are needed:

Operating Data

1. Minimum hull speed at full RPM (knots)
2. Ambient temperature of water in which vessel will work. (We use 85° F unless specified otherwise)

Engine Operating Data

3. Coolant temperature requirement for entering or exiting the engine, gear or aftercooler.
4. Unit's heat rejection (BTU/min)
5. Coolant flow (gpm)

Match these data with the corresponding information given in the appropriate Duramax Keel Cooler Selection Guide for the engine make and model you will be using, and the Duramax Keel Cooler model is identified for these operating conditions.

The Duramax Keel Cooler models that are recommended in the Selection Guide for specific engine makes and models provide the requisite cooling capacity according to computer calculations using the basic equation, $Q = hA\Delta T$, where:

Q = heat rejection, BTU/min

h = heat transfer coefficient, BTU per min. per °F per ft²

A = surface area of spiral tubing, ft²

T = the "appropriate" temperature difference (here, the logarithmic mean temperature difference "LMTD") °F

These relationships are shown in the following heat flow diagram for an engine-keel cooler circuit. The computer print-out reproduced here shows calculations using these relationships to determine the Duramax Keel Cooler to use with the engine and ship operating conditions noted in the example.

MFR = min. feet required

KT = knots

Duramax Keel Cooler Selection Guides are available for the most commonly specified domestic and overseas makes of engines and generator sets. The guides give data on each factor that affects keel cooler selection (heat rejection, temperature into cooler, temperature out of cooler, coolant pump flow, ambient water temperature, hull speed) for the engine models produced by a manufacturer. Tabular presentations of the data make the guides fast and easy to use.

"Duramax Cooler Installation Instructions" are available in a separate brochure as part of the total information package supplied with Duramax Keel Coolers.

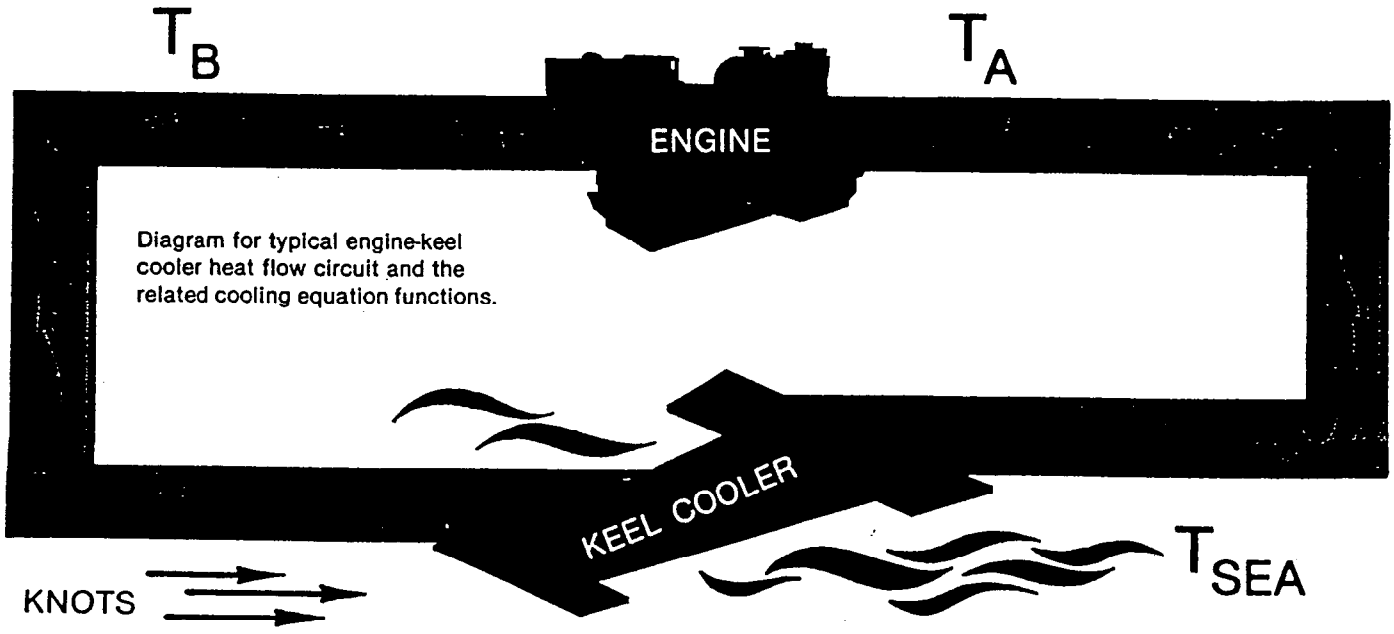

Diagram for typical engine-keel cooler heat flow circuit and the related cooling equation functions.

ENGINE: D353TA

375 BHP @ 1225 RPM
DESCRIPTION
J. W. — A. C.

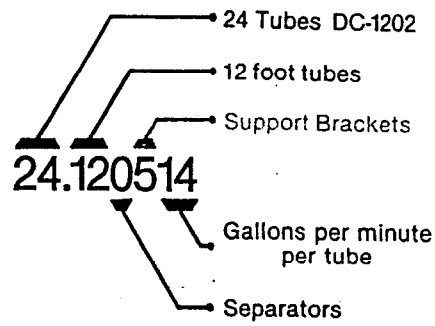

18[illegible]57 ***	T_A
170.00 ***	T_B
85.00 ***	T_{SEA}
145.00 ***	GPM
15000.00 ***	Q_E
91.14 ***	ΔT_{LMTD}

83.65 ***	T_A
76.67 ***	T_B
29.44 ***	T_{SEA}
551.00 ***	GPM
226800.00 ***	Q_E
	ΔT_{LMTD}

122.36	MFR
0.00	KT
24.061212	***
-24.062218	***
24.063224	***
24.065236	***
-12.110412	***
12.111424	***
-12.112436	***
-8.160719	***
8.161736	***

64.95	MFR
2.00	KT
24.031112	***
-24.032118	***
24.033124	***
24.035136	***
-12.060212	***
12.061224	***
-12.062236	***
-8.090318	***
8.091336	***
-6.110224	***
-4.170436	***

47.11	MFR
4.00	KT
-12.040112	***
12.041124	***
-12.042136	***
-8.060218	***
8.061236	***
-6.080124	***
-4.120236	***

43.02	MFR
5.00	KT
-12.040112	***
12.041124	***
-12.042136	***
-8.060218	***
8.061236	***
-6.080124	***
-4.110236	***

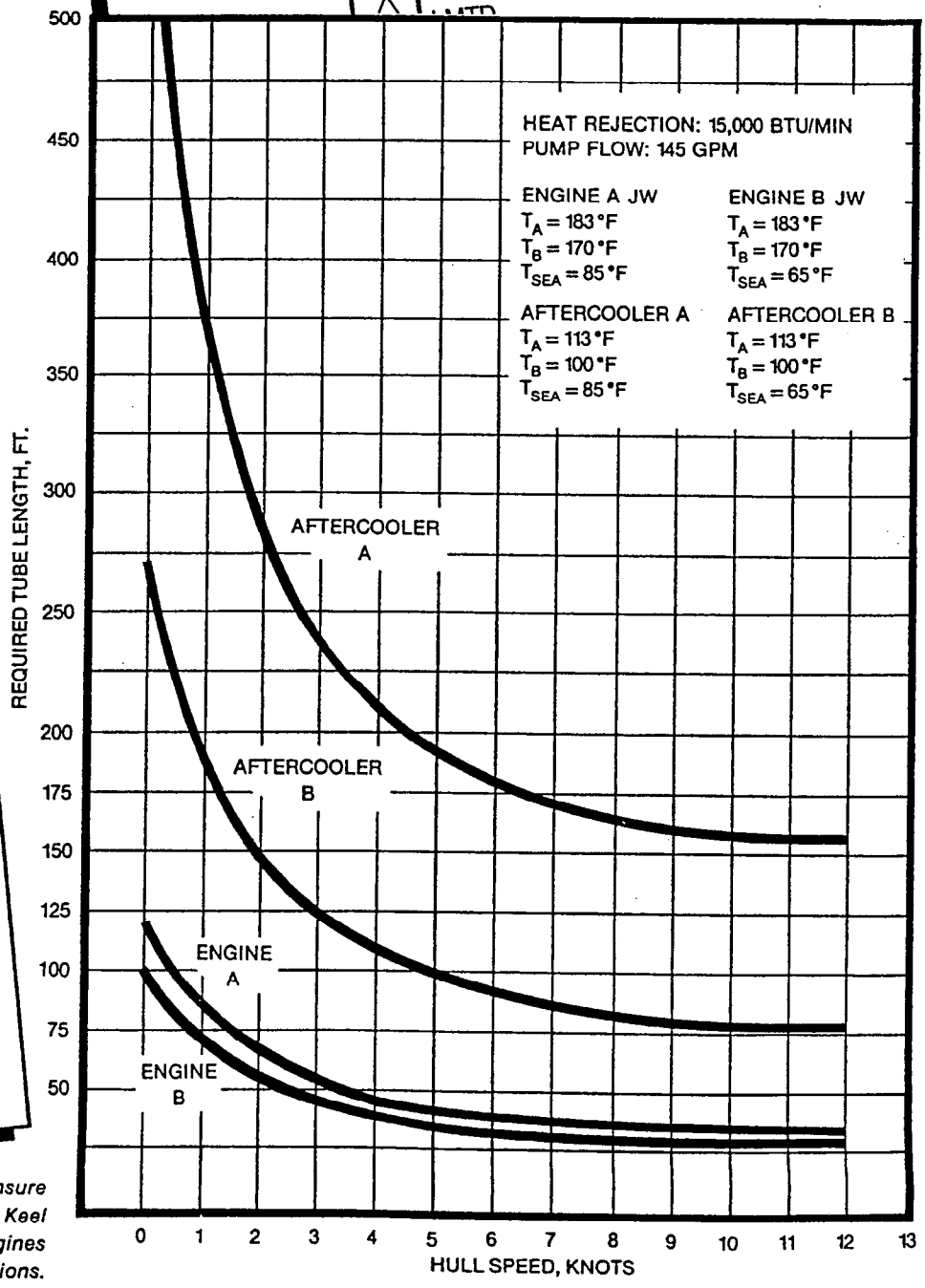

Computer-performed sizing calculations ensure precise matching of Johnson Duramax Keel Coolers with requirements of specific engines and vessel operating conditions.

The Johnson Rubber Company reserves the right to change design and specifications without notice or incurring obligation.

PERFORMANCE–THE ULTIMATE MEASURE OF TRUE VALUE

The best testimonials of reliable performance are records of successful applications. Duramax Keel Coolers are being selected in increasing numbers for a wide variety of vessels operating in various water environments. A few of the more recent installations are shown here.

"Cindy Brent", built by Superior Boat Works, Greenville, Miss., for Brent Towing Co., Inc. Greenville, Miss., is equipped with Duramax Coolers recessed into the hull.

CINDY BRENT

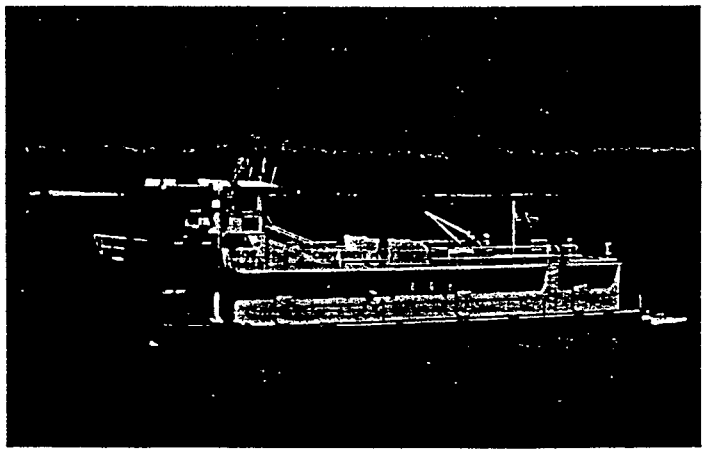

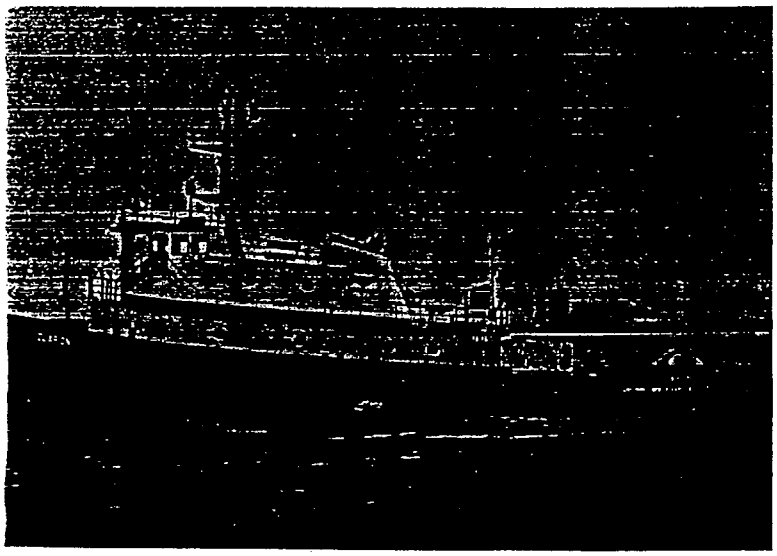

CLARION

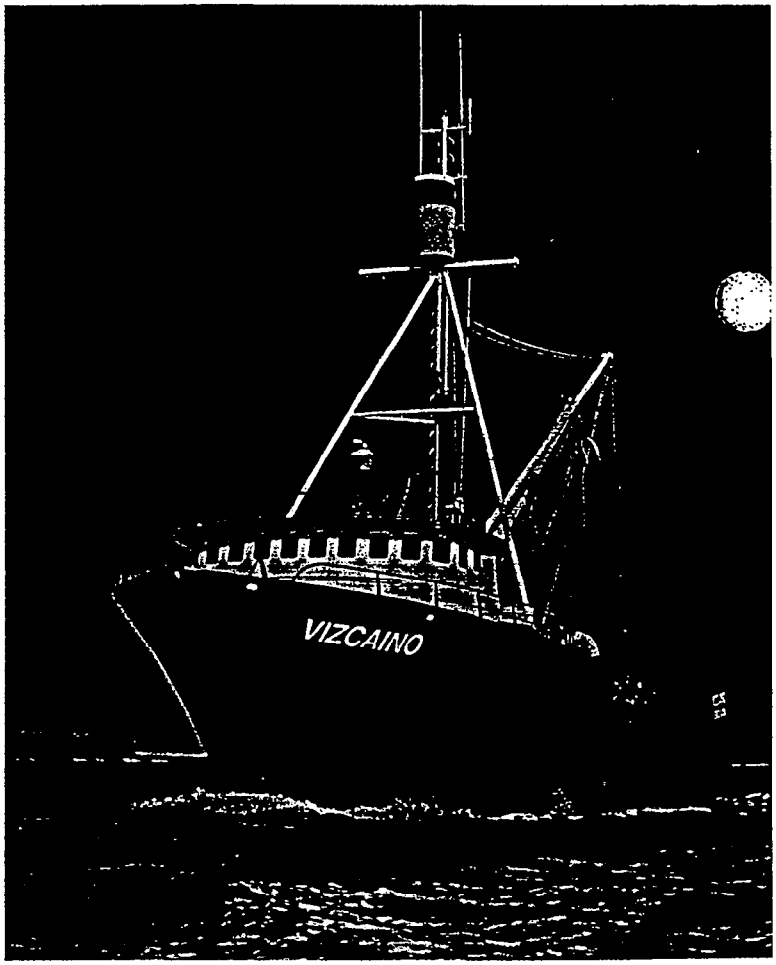

VIZCAINO

Recently built 114-ft. tug, **"Clarion"**, is equipped with Duramax Keel Coolers. She was built by Modern Marine Power, Inc. for Andre Ledoux, Inc., Hahnville, La.

The **"Vizcaino"**, one of six 108-ft. anchovy fishing vessels built for Pasquera Zapata, S.A. de C.V., Ensenada, Mexico, depends on Johnson Duramax Keel Coolers to cool her main engine. The vessels were designed by Marine Construction and Design Company.

The **"Shorty Baird"** has Duramax Coolers servicing the cooling needs of her main engine. Built by Superior Boat Works, Greenville, Mississippi for the U.S. Corps of Engineers, Little Rock District, the 86 foot vessel works 448 miles of the Arkansas and Verdigris Rivers.

The towboat, **"Carol G"**, built by Superior Boat Works, Greenville, Mississippi, for Apex Barge Co., St. Louis, Missouri, is equipped with a Duramax Keel Cooler.

Duramax Keel Coolers are used on the 176-ft. long offshore tug/supply vessel **"Stonington"**. Built by Wall Shipyard, Inc., Harvey, Louisiana, for The Seafarer Corp., Layfayette, Louisiana, this trim vessel is known for her strength and speed.

CAROL G

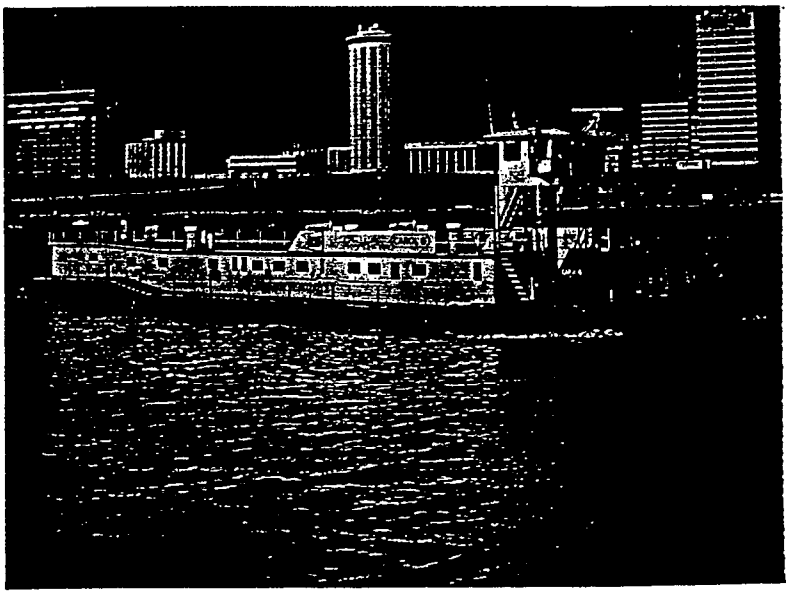

SHORTY BAIRD

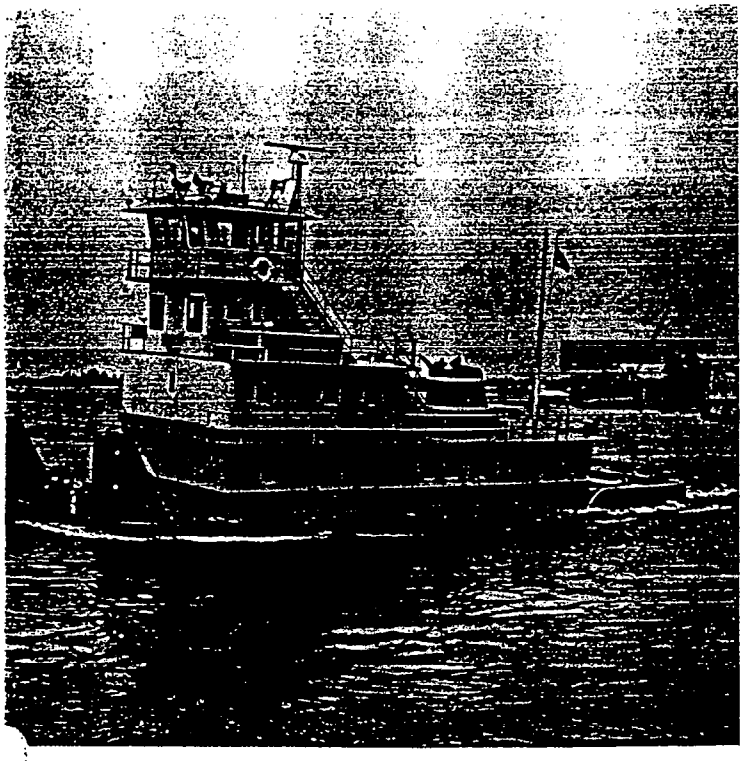

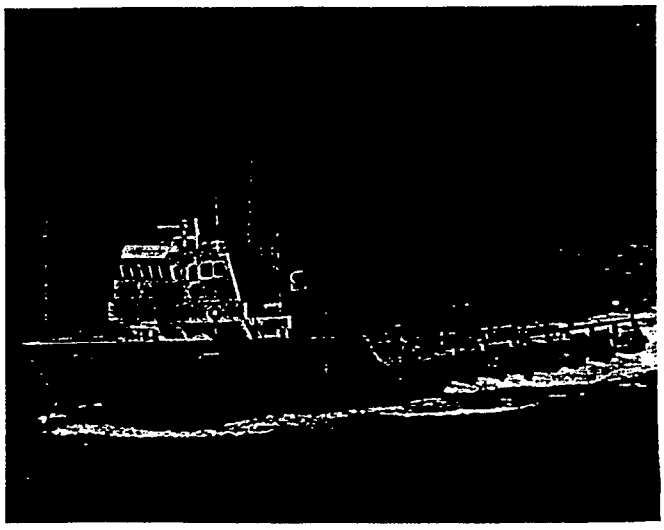

STONINGTON

LIMITED WARRANTY

The products referred to in this brochure are warranted to be free from defects in material and workmanship if installed and used in strict accordance with our installation instructions. Our liability is limited to our sale price of any products proved to be defective and which have not been altered, machined, finished, or stored in substandard warehouse, or at our option, to the replacement of such products upon their return to us. No product is to be returned prior to our inspection and written approval. All claims under this limited warranty must be in writing and submitted to us within one year after receipt of the product by you. THIS LIMITED WARRANTY IS EXPRESSLY IN LIEU OF ANY AND ALL REPRESENTATIONS AND WARRANTIES EXPRESS OR IMPLIED, INCLUDING ANY IMPLIED WARRANTY OF MERCHANTABILITY OR FITNESS FOR A PARTICULAR PURPOSE. The remedy set forth in this limited warranty shall be the exclusive remedy available to any person. No person has authority to bind us to any representation or warranty other than this limited warranty. We shall not be liable for any consequential damages resulting from the use of our products or caused by any defect, failure or malfunction of our products. (Some states do not allow the exclusion or limitation of incidental or consequential damages, so the above limitation or exclusion may not apply to you.

Johnson®

DURAMAX® MARINE
division of DURAMAX INC.

16025 Johnson Street, Middlefield, Ohio 44062 U.S.A.
Phone: (216) 632-1616 FAX: (216) 632-5265
FAX: (800) 497-9283 (U.S. and Canada)
Telex: 21-2564JRCM UR Cable: "DURAMAX"
Dependable Products For Ships Throughout The World

®T.M. Reg PRINTED IN U.S.A.

1-215-1192

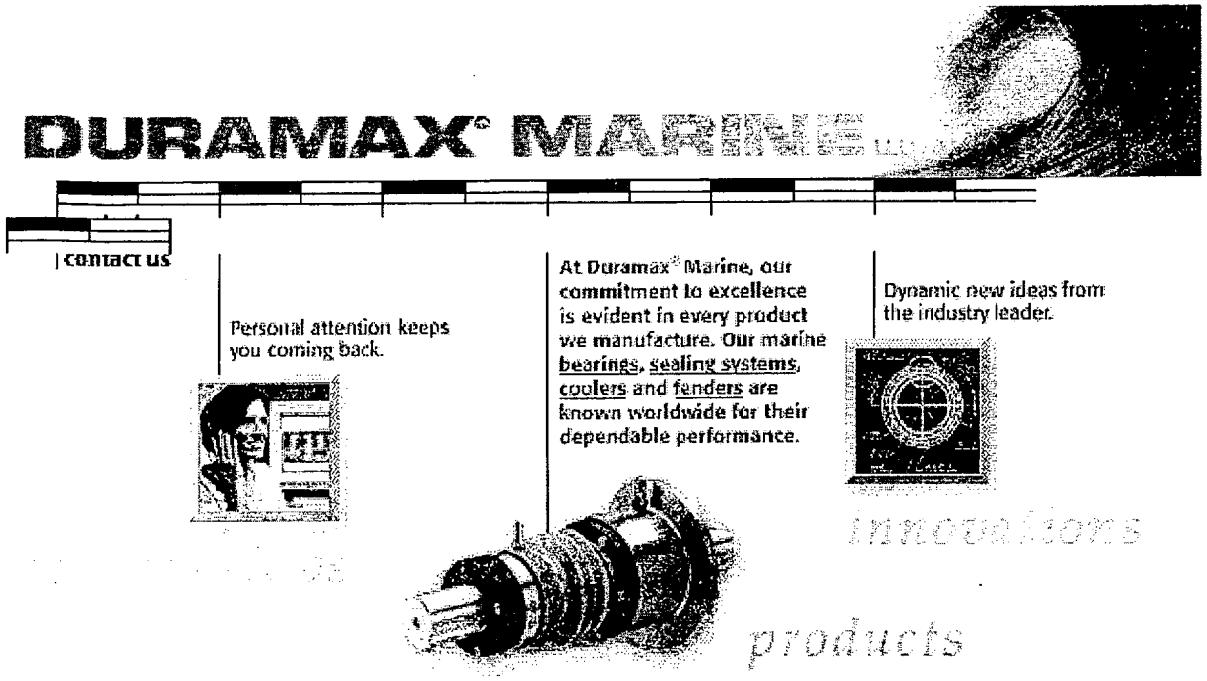

We moved! Contact us at our new manufacturing facility.

Details Below.

---

contact us | relationships | products | innovations | trade shows

Duramax® Marine LLC
17990 Great Lakes Parkway
Hiram, OH 44234 USA
Phone: 440.834.5400
Fax: 440.834.4950 or Fax: 800.497.9283 (US and Canada)
© 2001, Duramax® Marine LLC. All rights reserved.

This site designed and developed by Digital Navigation and Stein & Company

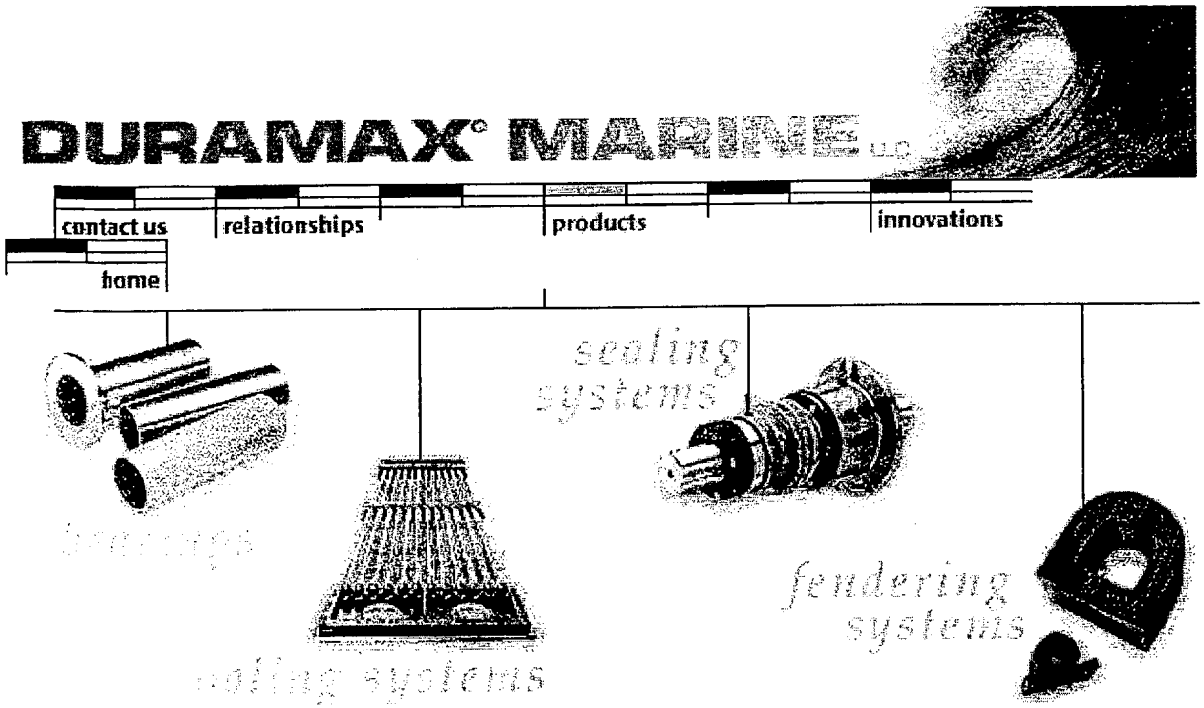

See our latest inspirations at a trade show near you.

---

contact us | relationships | products | innovations | trade shows | home
bearings | cooling systems | sealing systems
fendering systems

Duramax® Marine LLC
17990 Great Lakes Parkway
Hiram, OH 44234 USA
Phone: 440.834.5400
Fax: 440.834.4950 or Fax: 800.497.9283 (US and Canada)
© 2001, Duramax® Marine LLC. All rights reserved.

DURAMAX® MARINE

contact us | relationships | products | innovations

home

bearings | cooling systems | sealing systems | fendering systems

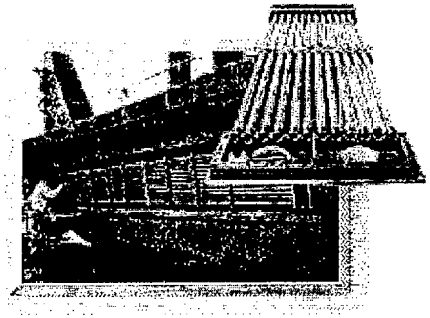

cooling systems

Duramax® Marine LLC offers you a choice of custom-sized marine engine cooling options. Whether you want a one-piece assembled, or a demountable type of cooler, through-hull fittings or non-through-hull connections, we offer you an engineered product that meets your design requirements and engine cooling needs. Our coolers are made with 90/10 cupro-nickel tubing in a wide range of models and cooling capacities.

DuraCooler®
Johnson Demountable Keel Coolers

---

contact us | relationships | products | innovations | trade shows | home
bearings | cooling systems | sealing systems
fendering systems

Duramax® Marine LLC
17990 Great Lakes Parkway
Hiram, OH 44234 USA

Phone: 440.834.5400
Fax: 440.834.4950 or Fax: 800.497.9283 (US and Canada)
© 2001, Duramax® Marine LLC. All rights reserved.

DuraCooler®

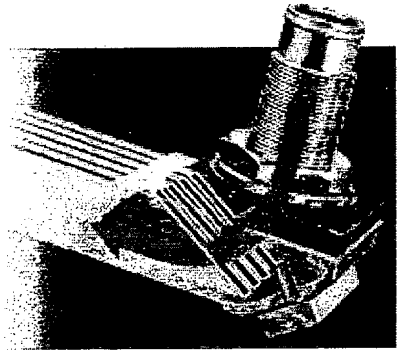

- 90/10 cupro-nickel tubing is resistant to waterflow erosion and serves as an antifoulant.
- Compact, one-piece design makes installation simple.
- Streamlined header design reduces pressure drop in water flowing through the cooler. External water travels more quickly to tubes increasing the heat transfer efficiency of the cooler.
- Custom-sized for your engine specifications and operational requirements.
- Available with through-hull type fittings or non-through-hull flanges.

Tube Cooler Success / Major Breakthrough Testing Results / Commitment to Design

DuraCooler® Sizing Sheet(s)

English	online	(download PDF)
Spanish	online	(download PDF)
Portuguese	online	(download PDF)

DuraCooler® CD Drawings

If you are a commercial boat builder or designer and would like to receive our DuraCooler® CD-ROM, (includes drawings to scale). Click Here to register.

DuraCooler®
Installation Manual

(download PDF)

Success of the Rectangular Tube Cooler

- In 1946, the first rectangular tube keel cooler came to the marine market.
- For nearly half a century, this design has enjoyed considerable success in the marine industry for keel cooling of heat sources on marine vessels.
- This type of cooler has been successful in the marine industry for three reasons:

1. Large amounts of tubing surface area in a relatively **small, compact footprint**. This equates to a highly efficient heat exchange device.
2. **Durability of design**: In many applications, the design has with stood more than twenty years of continuous use in severe marine environments.
3. **Ease of installation**: Shipyard workers appreciate the ease of installation of the one piece keel cooler.

back to top

First Major Breakthrough in Keel Cooling Technology

- In 1997, Duramax® Marine LLC initiated a **research and development program** to identify opportunities to improve the operational efficiency of the square-headed outboard keel cooler.
- **Finite element computer** studies were conducted to determine internal and external flow patterns, pressure drop and heat transfer characteristics for different heat exchanger geometries.
- Flow pattern studies determined that the outside tubes, tubes number 1 and number 8, **(the outside tubes) in the square-headed keel cooler tested were being used inefficiently** despite the fact these tubes have the greatest potential heat rejection per linear foot.
- The design of the existing square header is the reason for this inefficiency.
- Duramax® Marine LLC immediately **began to develop a more efficient header design.**
- Duramax® Marine LLC engineered the new streamlined header design to further **enhance interior and exterior flow patterns** and, at the same time, **reduce the overall pressure drop** within

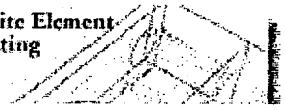
Finite Element Testing

the keel cooler unit.

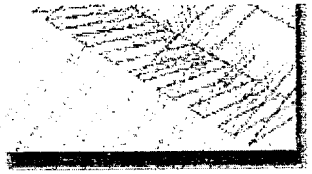

- In initial testing, the design also **increased coolant flow to the outside tubes** that had been used less efficiently in the traditional keel cooler design.
- Coolant flow distribution **in the outer tubes** increased 35% **after the geometry modifications**.
- Heat rejection **in the outer tubes** jumped 45%.
- Overall heat transfer **in the DuraCooler® SC-48-96** increased 17% over the square-headed unit of equal size in initial testing.
- The DuraCooler® design **with increased** coolant flow to the outside tubes will result in smaller units versus traditional square headers and lower costs.
- Overall **footprint** may be **reduced** as much as **42%** in some units.

(see graphs below)

back to top

Testing Results

Traditional Design Tested

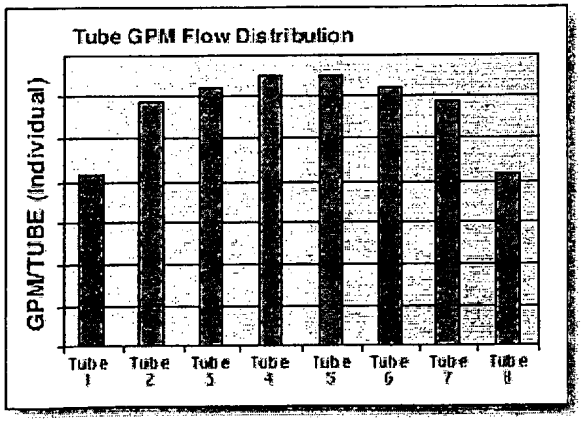

Computer modeling of the traditional design keel cooler tested showed poor coolant flow through tubes 1 & 8.

DuraCooler®

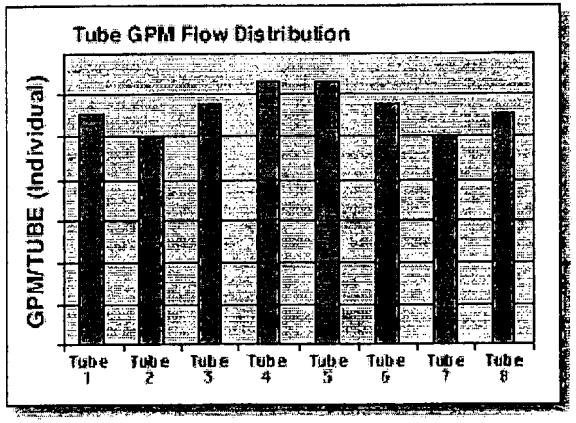

DuraCooler® header design change produced an increase of 35% in the outside tubes.

Traditional Design Tested

DuraCooler®

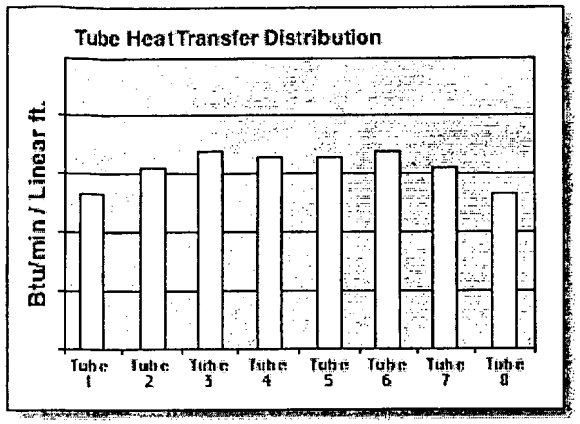

Computer modeling of the traditional design keel cooler tested indicated the outside tubes were being used least efficiently even though these tubes had the greatest potential heat rejection per linear foot.

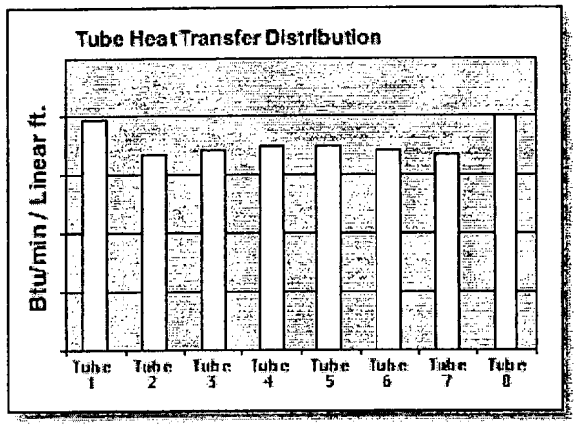

DuraCooler® header design increased heat transfer in the outside tubes by 45%!

Note: Study above conducted on a SC-48-96 and equivalent size square-head unit.
Studies conducted by: Flow Simulations Inc. e-mail: info@flowsimulations.com

Overall heat transfer in the DuraCooler SC-48-96 increased by 17% over the square-headed, traditional design keel cooler unit tested of equal size in initial testing.

Back to top

Commitment to Design Improvements

- Duramax® Marine LLC, with promising results from the finite element testing proceeded to the next phase of testing, actual unit testing in its research pond.
- In 1998, Duramax® Marine LLC built an **800,000-gallon testing facility** to better emulate marine conditions in a controlled

environment.

- Testing facility can test keel coolers **20 feet long and weighing as much as two tons.**
- Temperature drop, pressure drop and flow rates are monitored and recorded.
- Initial tests on the same size square-head keel cooler that was tested in the laboratory **validated the computerized testing.**

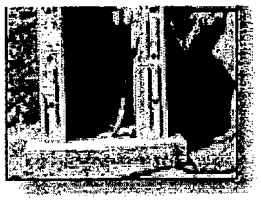

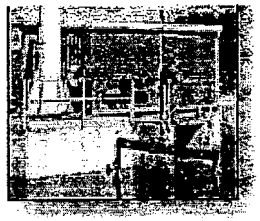

Back to top

---

contact us | relationships | products | innovations | trade shows | home
bearings | cooling systems | sealing systems
fendering systems

Duramax® Marine LLC
17990 Great Lakes Parkway
Hiram, OH 44234 USA
Phone: 440.834.5400
Fax: 440.834.4950 or Fax: 800.497.9283 (US and Canada)
© 2001, Duramax® Marine LLC. All rights reserved.

DuraCooler®

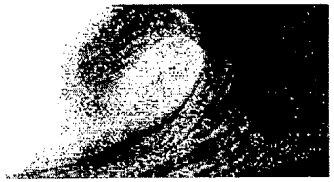

Instructions for requesting a DuraCooler quotation:

1. Complete the items shown in bold on the sizing sheet. This will enable Duramax Marine® to determine the correct DuraCooler® for your application.
2. If the information shown in "non-bold" is available, it may permit Duramax Marine® to quote a less expensive DuraCooler®. Please provide as much of this information as possible.

GENERAL INFORMATION

Customer _____ **Contact Name** _____

Phone ( ) _____ **Fax** ( ) _____ **E-mail** _____

Name of Vessel/Hull # _____ New Construction: Yes ○ or No ○

Type/Use of Vessel _____

Vessel Dimensions _____

Preferred Cooler: ◉ Single Pass ○ Double Pass

EXTERNAL CONDITIONS

Minimum Vessel Speed at Full Power _____ **knots**

Maximum Ambient Sea Water Temp _____ **F°**

Location of Coolers: bottom ◉ side ○ of hull.

Are there space restrictions on the hull? Yes ◉ or No ○

If yes, _____ (size restrictions)

MAIN ENGINE INFORMATION

Manufacturer **Model Number** **Quantity**

Model Year of Engine **HP** **@ RPM**

Total Heat Rejection **BTU/Min** **Coolant Temp.** to Engine

Pump Flow Rate or Range **GPM** to cooler

Exhaust Wet ◉ Dry ○ **Aftercooler Circuit: Separate** ○ **Combined** ○

Method of attachment to hull: Flanged Nozzle ○ **Inlet/Outlet** ○

Manufacturer of Gear (if gear to be cooled by DuraCooler®)

If Reintjes gear, provide water pump flow **GPM**

System pressure drop requirements:

GENERATOR

Manufacturer **Model Number** **Quantity**

Model Year of Engine **HP:** ◉ **KW** ○ **@RPM**

Method of attachment to hull: Flanged Nozzle ◉ **Inlet/outlet** ○

System pressure drop requirements:
(will be sized for 0 knots unless otherwise directed.)

OTHER (Pump, thruster, etc.)

Manufacturer **Model Number** **Quantity**

Model Year of Engine **HP:** ◉ **KW** ○ **@RPM**

Method of attachment to hull: Flanged Nozzle ◉ **Inlet/outlet** ○

System pressure drop requirements:
(will be sized for 0 knots unless otherwise directed.)

submit clear

contact us | relationships | products | innovations | trade shows | home
bearings | cooling systems | sealing systems
fendering systems

Duramax® Marine LLC
17990 Great Lakes Parkway
Hiram, OH 44234 USA
Phone: 440.834.5400
Fax: 440.834.4950 or Fax: 800.497.9283 (US and Canada)
© 2001, Duramax® Marine LLC. All rights reserved.

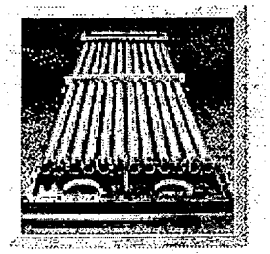

Johnson Demountable Keel Coolers

- Demountable, modular design.
- Available in 4, 6, 8, 12, and 24 tube units.
- Can be sized for multiple engines on one cooler.
- No through-hull fittings.
- Individual tubes can be replaced if damaged.
- Custom sized to your engine specifications and operational requirements.
- 90/10 cupro-nickel spiral tubing, resistant to salt water corrosion and sea growth.

Close Window

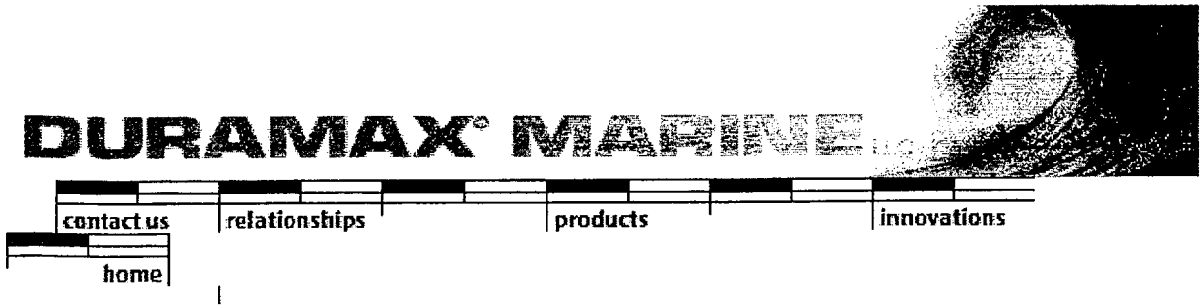

2001 Trade Show Schedule

IBEX-2001 Ft. Lauderdale, Florida	February 7-9, 2001
Work Boat World Asia 2001 Suntec City, Singapore	February 20-22, 2001
Eastern Canadian Fisheries Expo Yarmouth, Nova Scotia, Canada	April 6-8, 2001
SNAME Orlando, Florida	October 25-26, 2001
Ft. Lauderdale International Boat Show Ft. Lauderdale, Florida	October 25-29, 2001
FISH EXPO & WorkBoat Northwest Seattle, Washington	November 15-17, 2001
International WorkBoat Show New Orleans, Louisiana	November 28-30, 2001

contact us | relationships | products | innovations | trade shows | home

Duramax® Marine LLC
17990 Great Lakes Parkway
Hiram, OH 44234 USA
Phone: 440.834.5400
Fax: 440.834.4950 or Fax: 800.497.9283 (US and Canada)
© 2001, Duramax® Marine LLC. All rights reserved.

DURAMAX® MARINE LLC

contact us | relationships | products | innovations | home

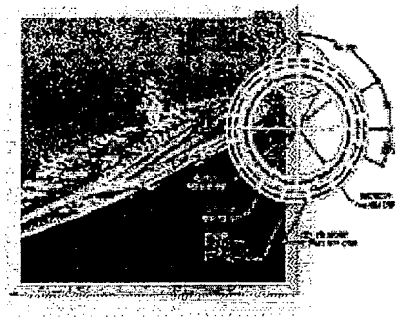

You're our greatest inspiration.

To excel in business today, you've got to be a leader. That's why we continue to engineer product solutions to solve your specific problems, and do it quickly to meet your schedule and keep your ship running smoothly. Here are just a few of our latest product and service innovations designed to help your business: Johnson® Cutless® Stern Tube Filler.

---

contact us | relationships | products | innovations | trade shows | home

Duramax® Marine LLC
17990 Great Lakes Parkway
Hiram, OH 44234 USA
Phone: 440.834.5400
Fax: 440.834.4950 or Fax: 800.497.9283 (US and Canada)
© 2001, Duramax® Marine LLC. All rights reserved.

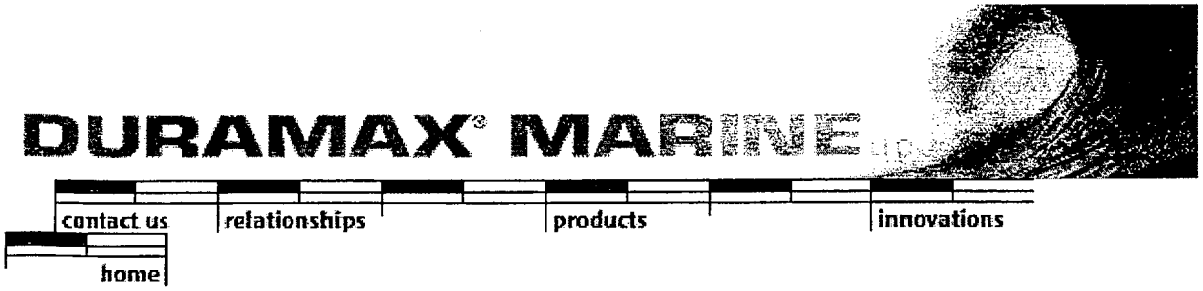

We're here for you.

At Duramax® Marine LLC, we take pride in our commitment to customer service. Let us answer all your questions, or just let us know how we're doing! We want to hear from you.

Duramax® Marine LLC
17990 Great Lakes Parkway
Hiram, OH 44234 USA
Phone: 440.834.5400
Fax: 800.834.9283 (US and Canada)
Fax: 440.834.4950

Name:

Company:

Title:

E-mail Address:

Company:

Company Address:

City:

State: Zip Code:

Phone:

Please send me information regarding:

Please contact me about:

Comments/Questions:

submit

17990 Great Lakes Parkway
Hiram, OH 44234 USA
Phone: 440.834.5400
Fax: 800.497.9283 (US and Canada) or, Fax: 440.834.4950
© 2001, Duramax® Marine LLC. All rights reserved.

DuraCooler™ by DURAMAX® MARINE LLC

DURACOOLER™ INSTALLATION MANUAL

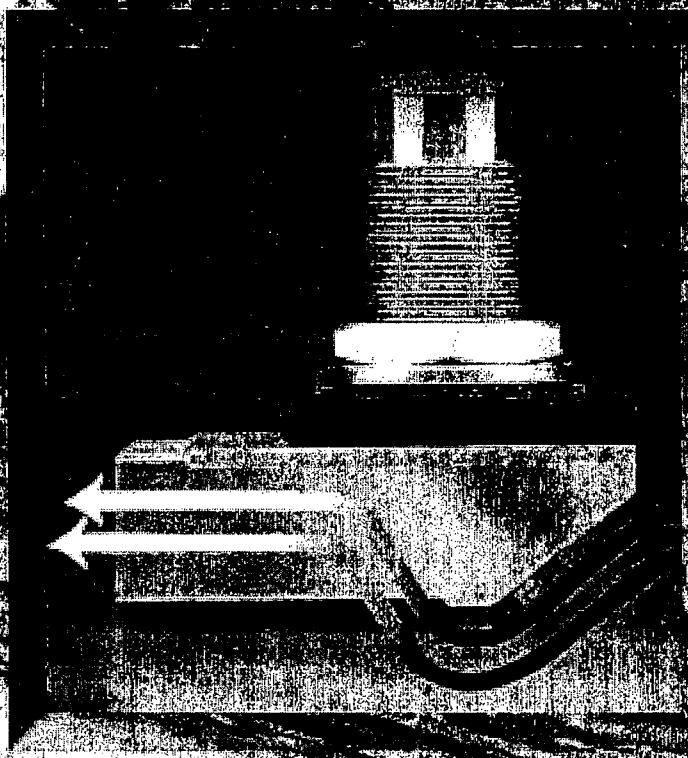

Get the edge

BASIC DURACOOLER™ INSTALLATION INSTRUCTIONS

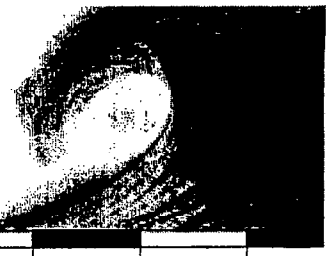

Please use these instructions as a supplement and general guideline to the full set of instructions for installation. Installation instructions in this section are based on a typical DuraCooler™ installation and may not be the only acceptable method of installation. Please read the complete DuraCooler™ Installation Instructions for a complete set of instructions.

Typical Installation

1. Select appropriate hull location for the DuraCooler.™ Refer to DuraCooler™ Installation Planning section for further details on this step.
2. Consult with local A.B.S., Coast Guard or other approval agency representatives to see if a sea chest (cofferdam) installation is required.
3. If a sea chest is used, make sure there is adequate clearance inside hull for sea chest plumbing.
4. Use the DuraCooler™ or make a template to mark hole locations on the hull. Follow instructions in Details of DuraCooler™ Installation – Exterior Details.
5. Burn holes in the hull per step 4 & 5 of Details of DuraCooler™ Installation – Exterior Details.
6. Make sure the DuraCooler™ nozzles fit into the holes in the hull without contact with the hull.
7. Build sea chest inside hull according to A.B.S., Coast Guard or other approval agency regulations. A sea chest should protect internal plumbing and prevent internal flooding in the event of the DuraCooler™ being knocked off of the hull.
8. Install the DuraCooler™ to the hull using only the hardware provided with the DuraCooler™ by Duramax® Marine and a polysulfide sealant such as BoatLIFE® Caulk.
9. The square or rectangular rubber gasket should be positioned between the DuraCooler™ and the exterior of the hull. The circular reinforced rubber gasket should be installed between the nozzle nut and the inside of the hull.
10. Tighten the nozzle nuts securely per the recommended torque values in the installation manual.
11. Close sea chest.
12. Install internal plumbing per the instructions in the Details of DuraCooler™ Installation – Interior Details Section.
13. Fill the system with water and/or water/glycol mixture. Bleed air from the system before replacing upper drain plug.
14. Pressure test the water-filled system to 30 psi (2.04 bar). Do not exceed 30 psi.
15. Build suitable protection around the DuraCooler™ per the instructions in the DuraCooler™ Installation Planning – Surface-Mounted DuraCoolers™ Section.

The recommended torques are:

	THREAD SIZE INCHES	TORQUE RANGE
Nozzle Nuts	3/4"	50 - 60 foot lbs.
	1" - 1 1/2"	70 - 100 foot lbs.
	2"	125 - 150 foot lbs.
	2 1/2" - 3 1/2"	200 - 250 foot lbs.
Header Stud Nuts	5/8" - 3/4"	30 - 40 foot lbs.
	1"	50 - 60 foot lbs.
Support Bracket Stud Nuts	1/2" - 3/4"	20 - 25 foot lbs.

DURACOOLER™ INSTALLATION PLANNING

All DuraCoolers™

1. Specifications for cooling capacity are based on ambient water (seawater) flow along the entire length of the DuraCooler.™ Installation where the DuraCooler™ tubes are perpendicular to the water flow may cause overheating.
2. Avoid mounting the DuraCooler™ where flex or severe vibration could be a problem, as this could cause damage to the DuraCooler.™
3. Efficient keel cooling depends on the continuous water flow over the DuraCooler,™ which can be enhanced by mounting the DuraCooler™ near the propeller. Since air is an insulator, aerated ambient water will diminish cooling capacity. Mounting the DuraCooler™ ahead or forward of the propeller and sufficiently below the water line will help avoid aerated ambient water. *(see illustration A)*

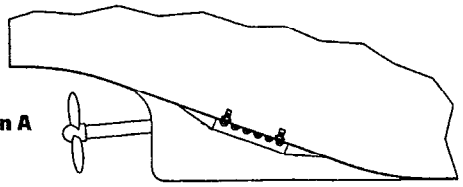

Illustration A

4. Free circulation of ambient water over the DuraCooler™ tubes is essential for proper operation. When operation occurs at zero knots, heat from the DuraCooler™ is carried away via convection currents.
5. Classification agencies may require a sea chest for certain installations. If a sea chest is required, side piping should be designed into the system for ease of installation and maintenance. *(see illustration B)*

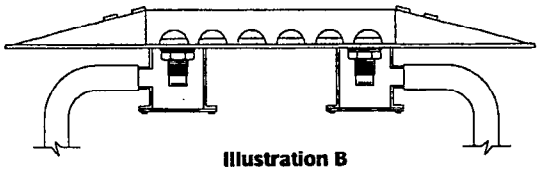

Illustration B

6. Locate the DuraCooler™ away from any hot water discharges to provide the coolest possible environment for the unit.

DuraCoolers™ Multiple Units

1. Do not artificially raise ambient water temperature surrounding the DuraCooler.™ Since DuraCoolers™ can be used to cool multiple circuits (such as jacket water and aftercooler water), there can be a DuraCooler™ located in the close proximity to another DuraCooler™ with a different operating temperature. Always locate the DuraCooler™ with the lower operating temperature forward or lower relevant to the water line of the other units or separated with a separator plate and mounted side by side and closer to the keel.

Recessed DuraCoolers™

1. Although mounting the DuraCooler™ on the hull surface provides better heat transfer efficiency, all planing hulls and vessels operating at speeds equal to or greater than 12 knots require recessed mounting. Recessing the DuraCooler™ into the hull and covering it with bar grating provides protection to the unit from flotsam and mechanical damage from pounding seas. There should be at least 1.50 inches (38 mm) of clearance on all sides of the recessed DuraCooler™ and the recess should be no deeper than .500 inches more than the cooler thickness. The recess should be constructed so that the ends and top side are flared out from the unit on a 45-degree angle to aid flow toward the DuraCooler™. This will allow heated water to escape. *(see illustration C.1 & C.2)*

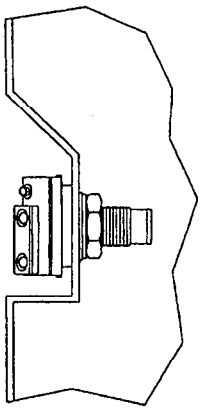

Illustration C.1

Illustration C.2

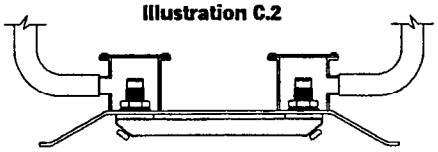

2. For zero knot applications, do not recess the DuraCooler™ on the bottom of a vessel unless the mounting surface inclines a minimum of 20° from forward to aft. Any protective shrouding around the DuraCooler™ must be constructed to allow for free flow of convection currents and other flows. *(see illustration A)*

Surface-Mounted DuraCoolers™

1. If the DuraCooler™ is to be surface-mounted, it should be properly protected using fairing blocks, side plates and a protective grill over the cooler. Fairing blocks can be constructed of bar grating or solid plates with suitable spacing. *(see illustration E)*

Illustration E

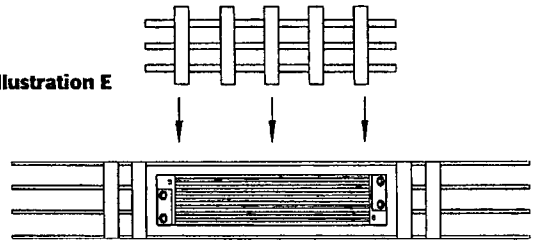

2. Fairing blocks should be constructed with a 4 to 1 slope. Holes should be cut in the fairing blocks to promote proper water flow across the DuraCooler.™ Any protective bar grating or grill should never block more than 25% of the area across the opening around the DuraCooler.™ Doing so could reduce cooling efficiency and cause overheating. *(see illustration F)*

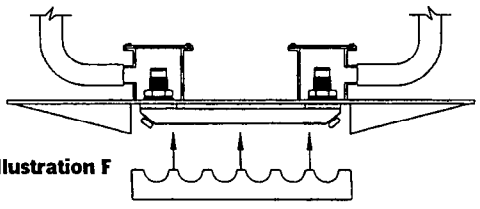

Illustration F

Details of DuraCooler™ Installation

Exterior Details

1. Never pressure test or operate the DuraCoolers™ at pressures in excess of 30 psi (2.1kg/cm 2) gauge.
2. The mounting gaskets supplied by Duramax® Marine with every DuraCooler™ are required to provide the proper spacing between the DuraCooler™ and the hull.
3. All DuraCoolers™ are supplied with zinc anodes. Zinc anodes minimize the galvanic corrosion of the DuraCooler™ and must be replaced during the ship's regular maintenance schedule to preserve the life of the DuraCooler.™ Stray electrical currents can cause galvanic corrosion and rapidly deteriorate the DuraCooler™ if anodes are not used. Replacement anodes complete with mounting kits can be obtained from your Duramax® Marine DuraCooler™ distributor.
4. Prior to cutting holes in the hull of the ship, measure the distance from center to center of the inlet and outlet nozzles on each end, and the distance to any support studs. Make the holes in the hull for the inlet and outlet nozzles .25 inches (6.4 mm) oversized. *(see Illustration G)*
5. After cutting holes in the hull for mounting the DuraCooler,™ grind the edges of the holes smooth to allow the entire length of the DuraCooler™ gaskets to lie flat on the surface of the hull.

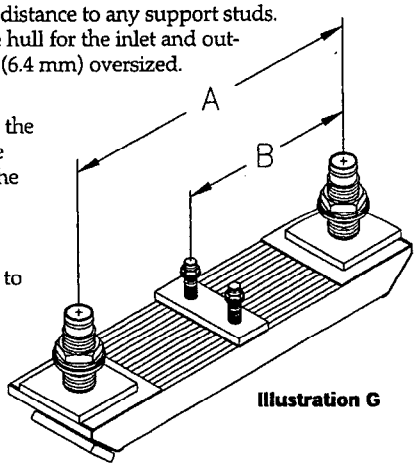

Illustration G

6. Use a polysulfide rubber sealant such as BoatLIFE® Caulk around mounting gaskets, washers, nuts on the DuraCooler™ and hull penetrations to make a water tight seal between the hull and the DuraCooler.™ After the sealant has cured, verify all torque settings on the hardware. Do not overtighten the hardware.
7. Use only the special bolts and washers provided by Duramax® Marine to attach the zinc anodes to the streamlined headers of the DuraCooler.™ *(see illustration H)*

Illustration H

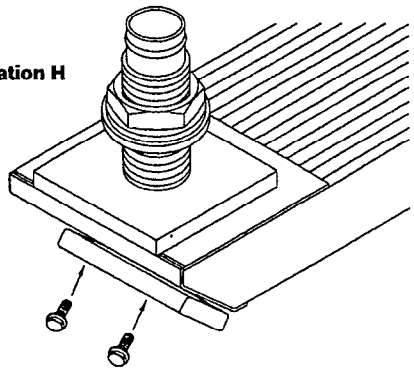

Interior Details

1. If you are retrofitting a DuraCooler™ to a system that previously used an inboard heat exchanger, the DuraCooler™ piping should bypass the heat exchanger and connect directly to the engine. Install self-venting piping between the DuraCooler™ and the engine to eliminate air pockets in the cooling system. Do not use tubing or fittings that are smaller in diameter than those on the engine or the DuraCooler.™ If the fittings on the engine are larger than the fittings on the DuraCooler,™ reduce the piping at the DuraCooler,™ not the engine. Use the fewest number of elbows to minimize pressure drop. *(see illustration I)*

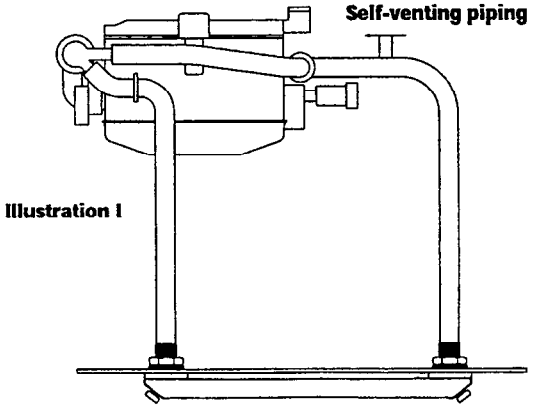

Illustration I

2. If you are connecting the engine piping directly to the DuraCooler™ nozzle, use wire-reinforced rubber hoses. The reinforcement will prevent hose collapse and interruption of water flow to the cooler. The connection hoses will help isolate the DuraCooler™ from engine vibration.
3. A bottom hull installation: Two-pass type DuraCoolers™ should be installed with the inlet and outlet at the high end relative to the water line.
4. A side hull installation: Connect the DuraCooler™ inlet hose to the lower connection tube to minimize air entrapment in the DuraCooler.™ It is important to completely fill the unit with water and pressure test prior to launching the vessel. Use the following procedure:
   - **A.** Remove the upper drain plug at the outlet end (preferably) of the DuraCooler.™
   - **B.** Fill the DuraCooler™ with coolant.
   - **C.** When coolant exits the drain opening, replace the plug.
   - **D.** Repeat this procedure to refill the DuraCooler™ every time it is drained.
5. See "Recommended Torques" chart for proper tightening on mounting hardware. Do not overtighten hardware.

TROUBLESHOOTING AN OVERHEATED DURACOOLER™ KEEL COOLING SYSTEM

Contamination & Performance Interference

A. Air in System:
Was all air purged from the DuraCooler™ during installation? If a two-pass DuraCooler™ is used, was it installed with the inlet and outlet nozzles at the highest location relative to the water line?

B. Foreign Obstructions:
Verify that there is no foreign matter blocking the DuraCooler™ nozzles. Objects that fall into the inlet or outlet openings prior to or during installation could reduce water flow through the DuraCooler.™

C. Deposits:
- **Oil** - If engine problems have occurred that allowed oil to enter the cooling system, your DuraCooler™ may have an internal coating of oil. This will interfere with heat transfer and may be corrected using a radiator flush procedure.
- **Mineral** - Hard water in the coolant system can cause mineral deposits to form in your DuraCooler.™ This may be corrected by using a radiator flush procedure.

D. Marine Growth:
Marine growth on the exterior of the DuraCooler™ will interfere with heat transfer. This problem is more likely if the vessel has not been operated for several months or more. If marine growth is present on the DuraCooler,™ the cooler should be cleaned by carefully scraping, using a high-pressure water spray or sand-blasting.

E. External Coating:
Verify that the DuraCooler™ has not been painted or coated with any other material. Any coatings will act as insulation and interfere with the heat transfer.

F. Antifreeze:
Was the DuraCooler™ sized for the concentration of antifreeze (glycol) in your system? Always premix any antifreeze solutions before adding them to your system. This will avoid unmixed antifreeze in the system.

Mechanical Causes of Overheating

A. Thermostat:
Is the thermostat opening properly?

B. Connections:
- **Hoses** - Make sure that wire-reinforced hoses are being used. Verify that none of the hoses have collapsed. Collapsed hoses interfere with coolant flow.
- **Piping** - Confirm that the piping between the engine and your DuraCooler™ is at least as large as the engine and the DuraCooler™ connections. The piping should be self-venting and contain the minimum number of elbows or bends.

C. Tubes:
- **Crushed** - Crushed or pinched tubes could interfere with coolant flow. Confirm all tubes are in good condition.
- **Blown** - Excess internal pressure can cause tubes to bulge. Bulging tubes could block the flow of ambient water across the cooler. Inspect the cooler for bulged tubes.

D. Water Pump:
Verify that the water pump is operating properly.

E. Expansion Tank:
Verify that the coolant level in the expansion tank is correct.

F. Mounting Gaskets:
Verify that the Duramax® Marine supplied mounting gaskets were used when the DuraCooler™ was installed. The gaskets act as spacers to provide room for the ambient water to properly circulate around the DuraCooler.™

G. Coolant:
Verify that the coolant is circulating through the DuraCooler.™ It may be following a path of least resistance through any bypass that may exist.

Ambient Factors That May Cause Overheating

A. Moored Vessel:
If the engine overheats while the vessel is moored, and if the DuraCooler™ is located near the propeller, engage the propeller to circulate ambient water past the DuraCooler,™ but only if this can be done safely.

B. Water Aeration:
Verify that the ambient water near the DuraCooler™ is not aerated. Aerated water will not transfer heat efficiently.

DuraCooler™ Limited Warranty & Terms and Conditions of Sale

Subject to all of the conditions of the Duramax® Marine, LLC Terms and Conditions of Sale, Duramax® Marine, LLC warrants that at its option Duramax® Marine, LLC will, refund the purchase price or repair or replace any part of a Duramax® Marine DuraCooler™ that is determined by Duramax® Marine, LLC to be defective in manufacturing workmanship and materials or fails to conform, at the time of its shipment by Duramax® Marine, LLC to the purchaser, to the description of such DuraCooler™ made by Duramax® Marine, LLC. Before becoming obligated under this warranty, Duramax® Marine, LLC: a) must receive, from the original purchaser, the allegedly defective DuraCooler™ at its manufacturing plant, freight prepaid, no later than the earlier of 12 months from the first use of the original, new DuraCooler™ or 18 months from the date of original shipment of the new DuraCooler™ to the purchaser; b) must receive the DuraCooler™ no more than 30 days after the alleged defect was discoverable by the purchaser; and c) have the right to inspect the DuraCooler™ and to determine, in its sole discretion, that a defect exists in manufacturing workmanship and materials or that the DuraCooler™ did not conform at the time of shipment by Duramax® Marine, LLC to the description made by Duramax® Marine, LLC. Repairs do not extend the original term of warranty specified above.

Duramax® Marine, LLC shall have no obligations hereunder for any claim for defects in a DuraCooler™ that are the result of shipping damage, corrosion, damage caused by conditions of service, accident, abuse, misuse, marine growth, oil, chemical or corrosive substances, repairs made by the purchaser or others, changes made by the purchaser or others, exposure to adverse conditions after shipment by Duramax® Marine, LLC, or any effect of installation on an aluminum hull vessel, use or installation in a manner not specified or recommended by Duramax® Marine, LLC, or improper or incorrect installation efforts. No DuraCooler™ will be accepted by Duramax® Marine, LLC for a warranty claim without being accompanied by a written claim of defects covered by this warranty and that also reference a Returned Goods Authorization (RGA) number that must be obtained by the customer from Duramax® Marine, LLC prior to shipment to Duramax® Marine, LLC.

Duramax® Marine, LLC shall have no liability under this warranty for any repairs, replacements or refund if the customer fails: a) to install the DuraCooler™ in accordance with the installation instructions provided by Duramax® Marine, LLC; b) to comply with the most stringent of generally accepted commercial practices for maintenance and protection of the DuraCooler™ or the maintenance and protection instructions provided by Duramax® Marine, LLC; c) to use and store the DuraCooler™ in environmental, mechanical, electrical and performance conditions specified by Duramax® Marine, LLC immediately in the event any DuraCooler™ exhibits a defect covered by this warranty. The customer acknowledges that the DuraCooler™ must be protected by an anode at all times and that any corrosion damage or failure caused or accelerated by the failure to maintain adequate anode protection will not be covered by this warranty and will be the sole responsibility of the customer.

Duramax® Marine, LLC reserves the right to substitute replaced DuraCoolers™ with DuraCoolers™ of similar characteristics and to change its product specifications and configuration at any time without notice to the customer.

This warranty provision is part of the Duramax® Marine, LLC Terms and Conditions of Sale which apply and govern all sales of our products. Installation or use of any Duramax® Marine DuraCooler™ product or any claim made under this warranty shall constitute acceptance by the purchaser of the Duramax® Marine, LLC Terms and Conditions of Sale as the sole terms and conditions applicable to the purchase and supply of the DuraCooler.™ A complete copy of the Terms and Conditions of Sale is available from Duramax® Marine, LLC upon request.

DURAMAX® MARINE, LLC WARRANTIES ARE EXPRESSLY IN LIEU OF ANY OTHER WARRANTIES, EXPRESSED OR IMPLIED, INCLUDING WITHOUT LIMITATION ANY WARRANTY OF MERCHANTABILITY OR FITNESS FOR PARTICULAR PURPOSE, EVEN IF THE PURPOSE IS KNOWN TO DURAMAX® MARINE, LLC, AND IN LIEU OF ANY OTHER OBLIGATIONS OR LIABILITY ON THE PART OF DURAMAX® MARINE, LLC. DURAMAX® MARINE, LLC NEITHER ASSUMES (NOR HAS AUTHORIZED ANYONE TO ASSUME FOR IT) ANY OTHER WARRANTY OR LIABILITY IN CONNECTION WITH ITS PRODUCTS.

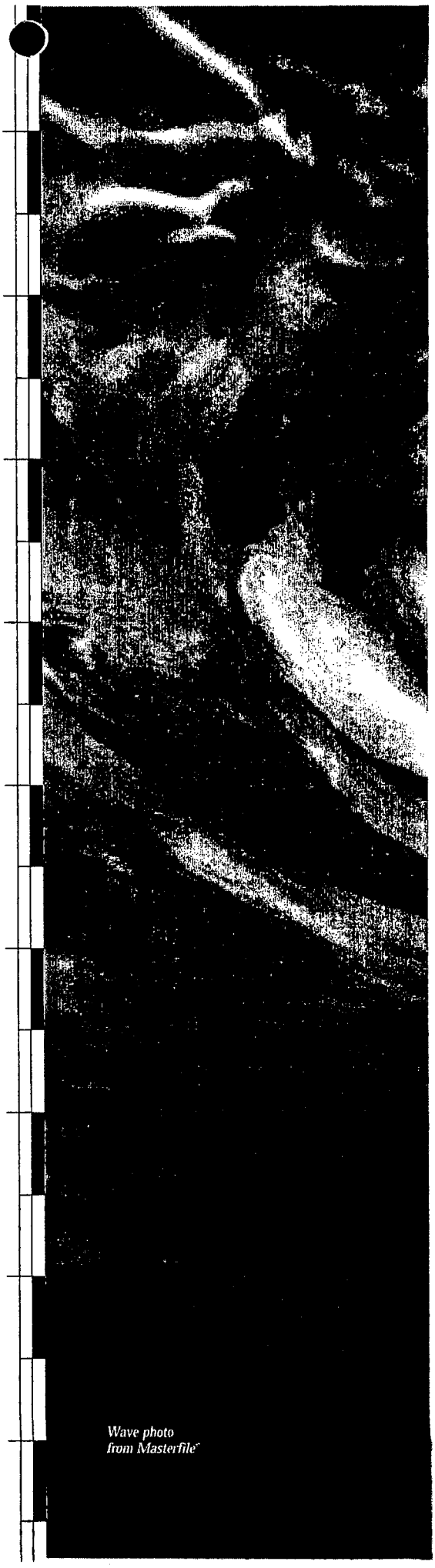

Wave photo from Masterfile®

15986 Valplast Road
P.O. Box 250
Middlefield, Ohio 44062-0250 USA

PHONE 440.632.1616

FAX 800.497.9283 *USA & Canada*
or 440.632.5265

E-MAIL info@duramaxmarine.com
WEB www.duramax-marine.com

DURAMAX® MARINE LLC

1199 P/N 830 000 044

DuraCooler™

Success of the Rectangular Tube Cooler

- In 1946, the first rectangular tube keel cooler came to the marine market.
- For nearly half a century, this design has enjoyed considerable success in the marine industry for keel cooling of heat sources on marine vessels.
- This type of cooler has been successful in the marine industry for three reasons:
  1. Large amounts of tubing surface area in a relatively **small, compact footprint**. This equates to a highly efficient heat exchange device, which is a smaller target to be damaged by underwater debris.
  2. **Durability of design**: In many applications, the design has stood up to more than twenty years of continuous use in severe marine environments.
  3. **Ease of installation**: Shipyard workers appreciate the ease of installation of the one piece keel cooler.

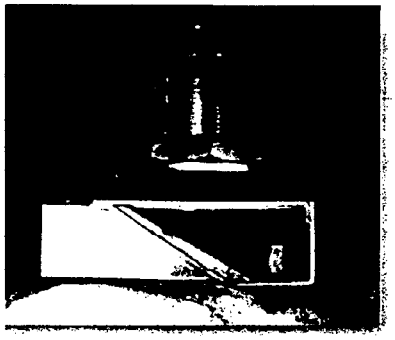

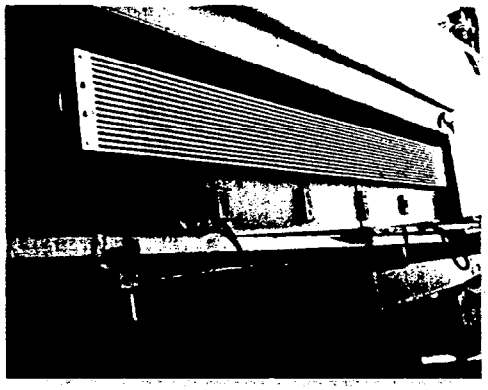

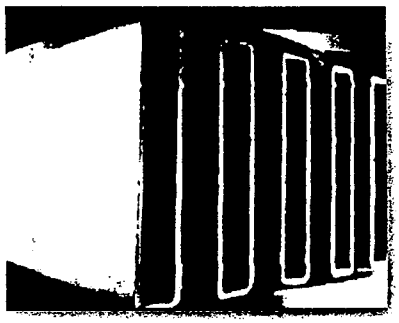

Why is the heat transfer so poor for the outer tubes?

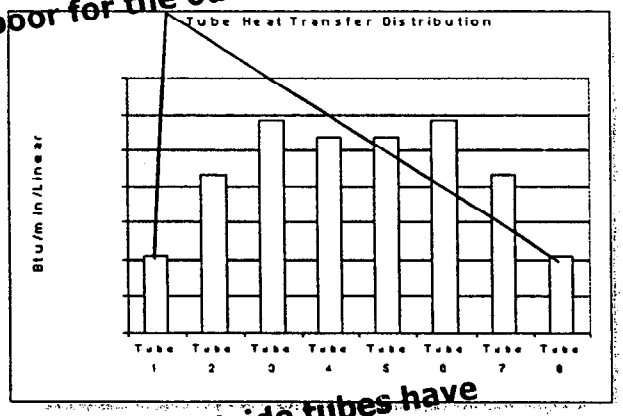

Why do the outside tubes have the lowest flow rates?

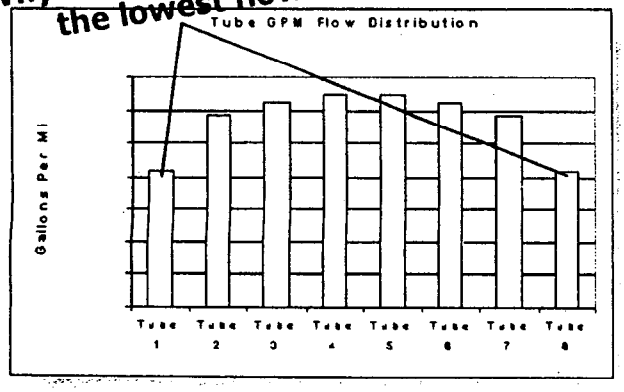

Consumers Request Improvements

- In 1997, Duramax® Marine LLC initiated a **research and development program** to identify opportunities to improve the operational efficiency of the square-headed outboard keel cooler.
- **Finite element computer** studies were conducted to determine internal and external flow patterns, pressure drop and heat transfer characteristics for different heat exchange geometries.
- Flow pattern studies determined that the outside tubes, tubes number 1 and number 8, **(the outside tubes) in the square-headed, traditional keel cooler were being used inefficiently** despite the fact these tubes have the greatest potential heat rejection per linear foot.
- The design of the existing square header is the reason for this inefficiency.
- Duramax® Marine LLC immediately **began to develop a more efficient header design.**

00001

© 2000 by Duramax® Marine LLC file: pm/bk/c/mydoc/duracoolersalestool0417

DuraCooler™

First Major Breakthrough in Keel Cooling Technology

- Duramax® Marine LLC engineered the new streamlined header design to further **enhance interior and exterior flow patterns** and, at the same time, **reduce the overall pressure drop** within the keel cooler unit.
- In initial testing, the design also **increased coolant flow to the outside tubes** that were used less efficiently in the traditional keel cooler design.

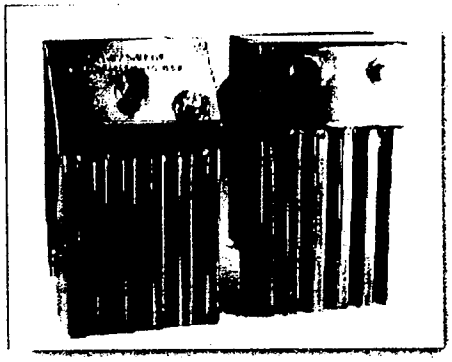

Finite Element Testing on Streamlined DuraCooler™

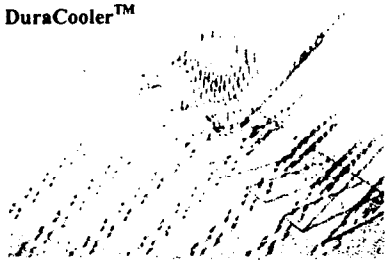

Streamlined DuraCooler™ Demonstrates Increased Efficiency

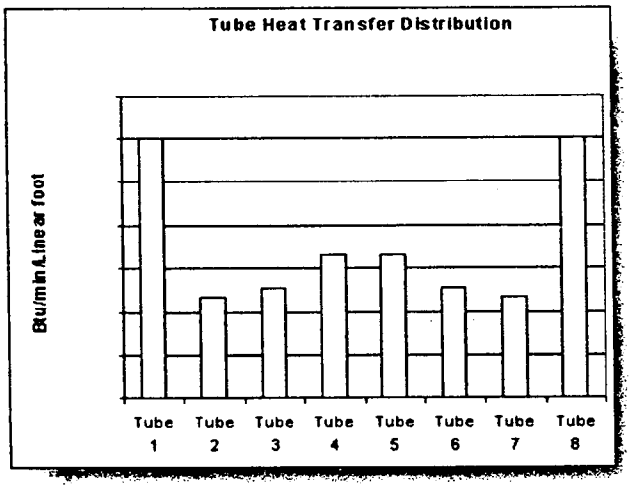

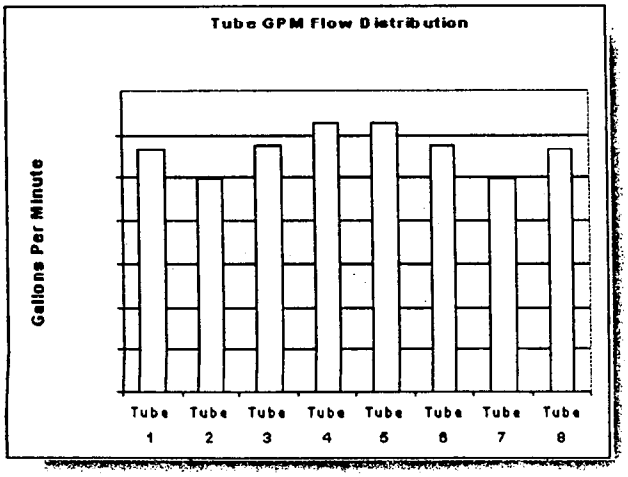

- Coolant flow distribution **in the outer tubes** increased 35% **after the geometry modifications.**
- Heat rejection **in the outer tubes** jumped 45%.
- Overall heat transfer **in the DuraCooler™ SC-48-96** increased 17% **over the square-headed unit** of equal size in initial testing.

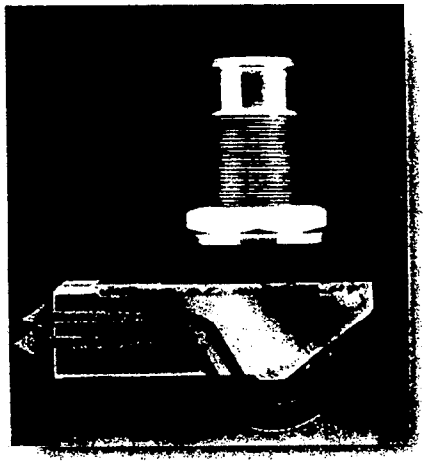

- The DuraCooler™ design **with increased** coolant flow to the outside tubes will result in **major savings** for two-pass cooler alteratives.
  1. Smaller units versus traditional square headers.
  2. Lower costs.
- Overall **footprint** may be **reduced** as much as **42%** in some units.
- Duramax® Marine LLC, with promising results from the finite element testing proceeded to the next phase of testing, actual unit testing in its research pond.

00002

© 2000 by Duramax® Marine LLC file: pm/bk/c/mydoc/duracoolersalestool041700

DuraCooler™

Commitment to Design Improvements

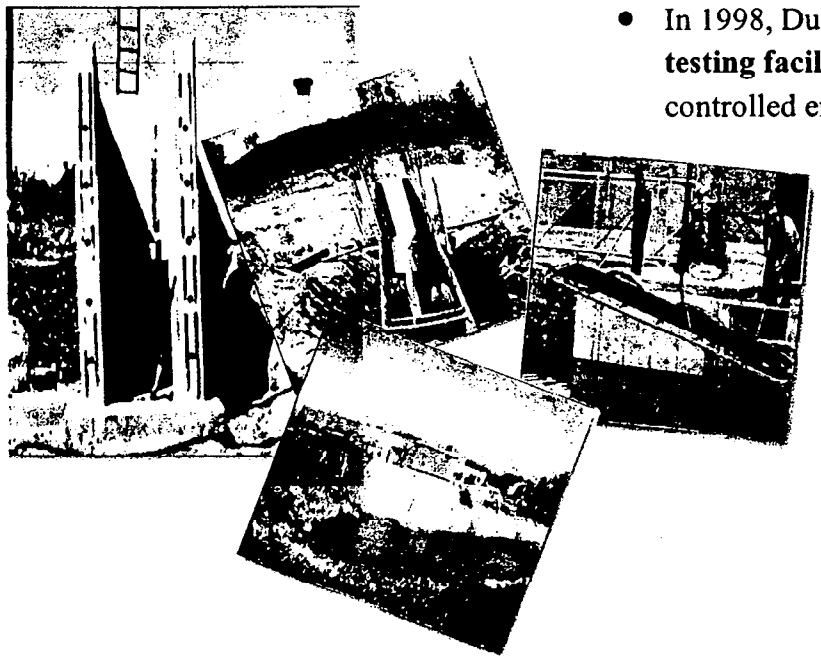

- In 1998, Duramax® Marine LLC built an **800,000-gallon testing facility** to better emulate marine conditions in a controlled environment.
  - Testing facility can test keel coolers **20 feet long and weighing as much as two tons.**
  - Temperature drop, pressure drop and flow rates are monitored and recorded.
  - Initial tests on the same size square-head keel cooler that was tested in the laboratory **validated the computerized testing.**

Quality Manufacturing Processes

- DuraCoolers™ are manufactured using a **two- piece header design** so the keel cooler header can be brazed together on both the inside and outside.
- Two piece headers and tubes are manufactured using **90/10 cupro-nickel**, which has excellent heat transfer properties and sea growth resistant strength.
- Duramax® Marine LLC uses premium grade **silver solder** for maximum cooler **flexibility** at cooler joints.
- Unlike the traditional keel coolers, DuraCoolers™ have **coarsely-threaded nozzles**, which is preferred by keel cooler installers.
- **Every DuraCooler™ is pressure and vibration-tested** before being shipped to ensure the cooler is free from leaks.

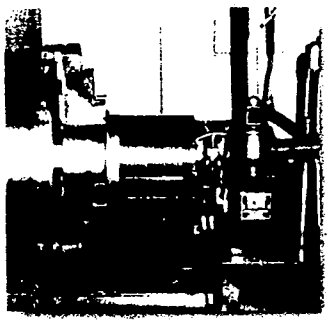

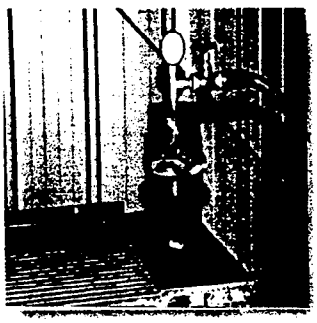

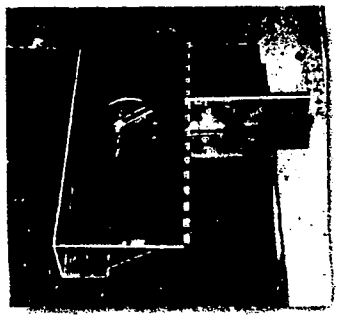

00003

© 2000 by Duramax® Marine LLC file: pm/bk/c/mydoc/duracoolersalestool041700

DuraCooler™

PATENT PENDING

A new angle on cooling technology

Get the edge with DuraCooler.™ In the commercial marine industry you need every competitive advantage you can get. That's why we've developed the DuraCooler™—one of the most innovative and efficient keel coolers on the market today. DuraCooler's™ unique streamlined header design enhances internal coolant and external seawater flow while reducing system pressure drop. The new design also provides optimum heat transfer efficiency, resulting in smaller keel cooler requirements and a reduction in cooling system costs. On replacement retrofits, this increased cooling capacity within the same installation footprints provides the vessel owner an additional cooling safety factor.

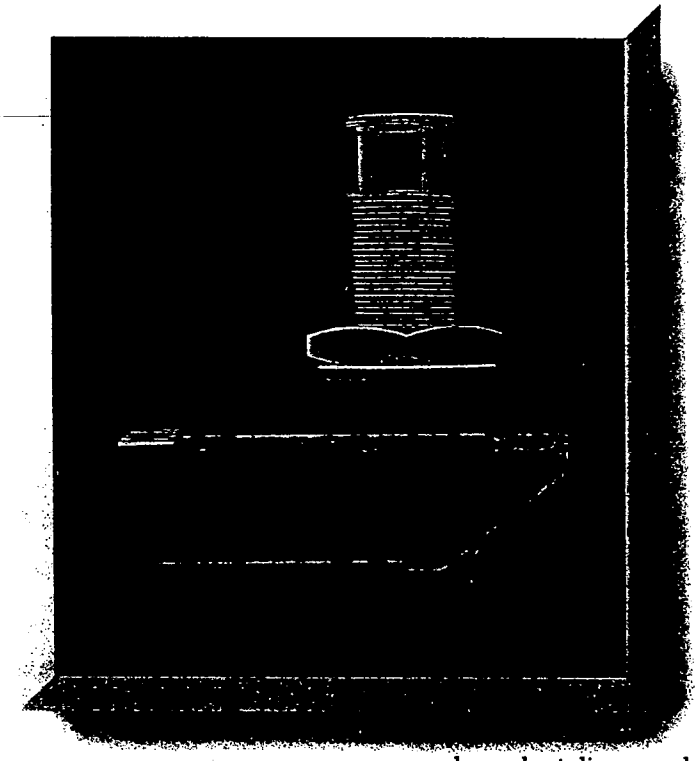

Superior Materials. Superior Performance. We understand the demands of the commercial marine market. That's why we manufacture every DuraCooler™ with 90/10 cupronickel tubing; a high-strength material with exceptional heat transfer properties that has excellent resistance to corrosive and erosive effects of seawater. Each header is manufactured with heavy gage material for exceptional strength and durability. Plus, our two-piece header design allows for brazing seams inside and outside with premium-grade silver solder—providing maximum strength and leak resistance in a single-piece structure that is easier to install. And every DuraCooler™ is pressure tested before we ship from the factory.

Custom sized for your vessel's needs. Whether new construction or retrofit, the DuraCooler™ is the perfect fit for your needs. Our computerized sizing system uses engine specification data, hull location and your vessel's operating conditions to provide a more precise method of keel cooler selection and provides the correct cooling capacity for maximum engine loads and operational efficiency. The end result is an effectively sized keel cooling system, without guesswork.

Unparalleled product support. For over 35 years, Duramax® Marine has been a leading manufacturer in the commercial marine industry. We are proud to offer you high quality, engineered product lines such as Johnson Cutless® Rubber Bearings, Duramax® Sealing Systems, Johnson Commercial Dock Bumpers and now, the new DuraCooler.™ We are continuously searching for ways to improve all our products in our extensive research and development facilities. At Duramax® Marine, you'll receive an unparalleled level of service from professional staff who stay in touch and understand that your success is our success. Duramax® Marine. We'll help you get the edge.

00004

CALL TODAY FOR A FREE SIZING.

DuraCooler™

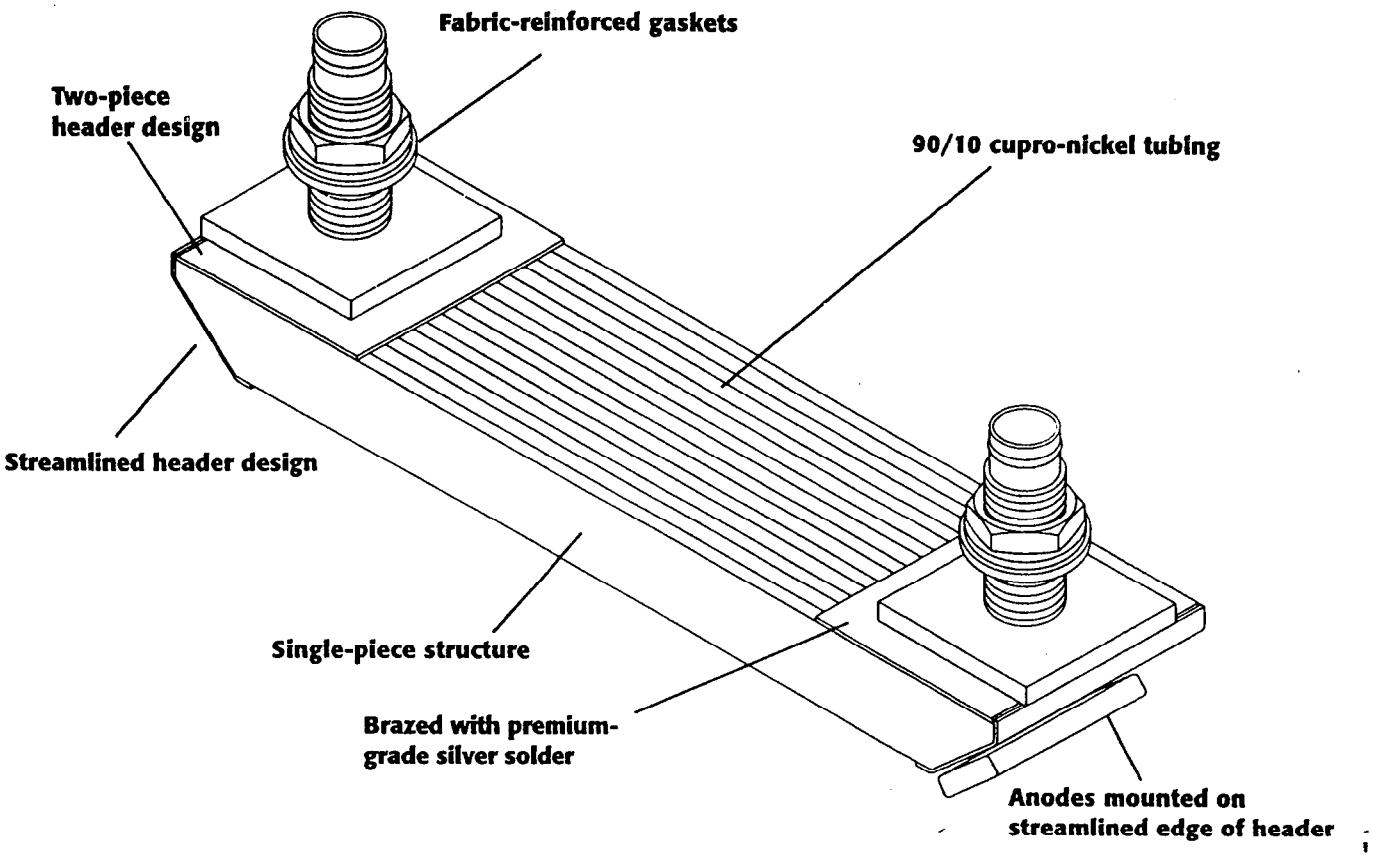

Features/Benefits

- **90/10 cupro-nickel tubing** is resistant to waterflow erosion and serves as an antifoulant.
- **Heavy gage material for headers** gives maximum strength and durability.
- **Two-piece header design** allows access for brazing on inside and outside of header which, in turn, increases the integrity and reduces the chance of leakage.
- **Streamlined header design** allows less pressure drop of water flowing through the cooler. External water travels more quickly to tubes increasing the heat transfer efficiency of the cooler. Streamlined design provides better fuel efficiency and less drag. Deflects debris away from the cooler.
- **Brazed with premium-grade silver solder** for flexibility.
- **Footprint retrofitable to alternative cooler installations** makes for ease of installation and minimal assembly.
- **Fabric-reinforced gaskets** offer better gasket integrity and longer life.
- **Anodes mounted on streamlined edge of header** provide less stand-off distance from hull, less drag, better fuel efficiency and are less likely to be damaged by debris.
- **Computerized sizing program** finds the most efficiently sized cooler for each application without the risk of overheating.
- **Half-million dollar research facility** enables full-scale in-house testing on actual units under various conditions. Allows us to continually improve our keel cooler and provide a better product, and more reliable information to the customer.
- **Vertically integrated company** provides added control over product design and quality.

00005

16025 Johnson Street
P.O. Box 67
Middlefield, Ohio 44062-0067 USA
PHONE 440.632.1616
FAX 800.497.9283 *USA & Canada*
or 440.632.5265
E-MAIL info@duramaxmarine.com
WEB www.duramax-marine.com

DURAMAX® MARINE

Bow: FVI

DuraCooler

DURAMAX® MARINE LLC
Flange Mounted DuraCooler® Installation Instructions

These instructions are intended as a supplement to our DuraCooler® installation instructions. If additional information is required, please refer to our through-hull DuraCooler® installation instructions or contact Duramax® Marine LLC. Please read this installation instruction from start to finish before attempting to install your flanged DuraCooler®.

Exterior Details:

1. Never pressure test or operate the DuraCooler® at pressures in excess of 30 psi (2.1 kg/cm 2) gauge.

2. All DuraCoolers® are supplied with zinc anodes. Zinc anodes minimize possible galvanic corrosion of the DuraCooler® and must be replaced during the ship's regular maintenance schedule to preserve the life of the DuraCooler®. Stray electrical currents can cause galvanic corrosion and rapidly deteriorate the DuraCooler® if anodes are not used. Replacement anodes complete with mounting kits can be obtained from your Duramax® Marine DuraCooler® distributor.

3. Use the DuraCooler® as template:
   Remove steel mounting flange supplied with your DuraCooler®.
   Use Schedule 80 steel pipe to mount flange to hull.
   Weld pipe onto steel mounting flange.

   Caution: The pipe may not project through the base of the mounting flange. If the pipe projects through the mounting flange, leakage will occur between flanges.

   Bolt the pipe/flange to the DuraCooler®.
   Position the DuraCooler® against the hull.
   Scribe the hull.
   Remove the DuraCooler®.
   Cut holes in the hull.
   Re-position pipes in the holes (with the DuraCooler® attached).
   Tack weld the pipe in place.
   Unbolt and remove the DuraCooler®.
   Finish weld the pipe in place both inside and outside of the hull.

*** **Pipe length** must create enough clearance "space" to install the nuts between hull and stud ends. Pipe should not be so long as to weaken the connection between pipe and hull.
See illustration:

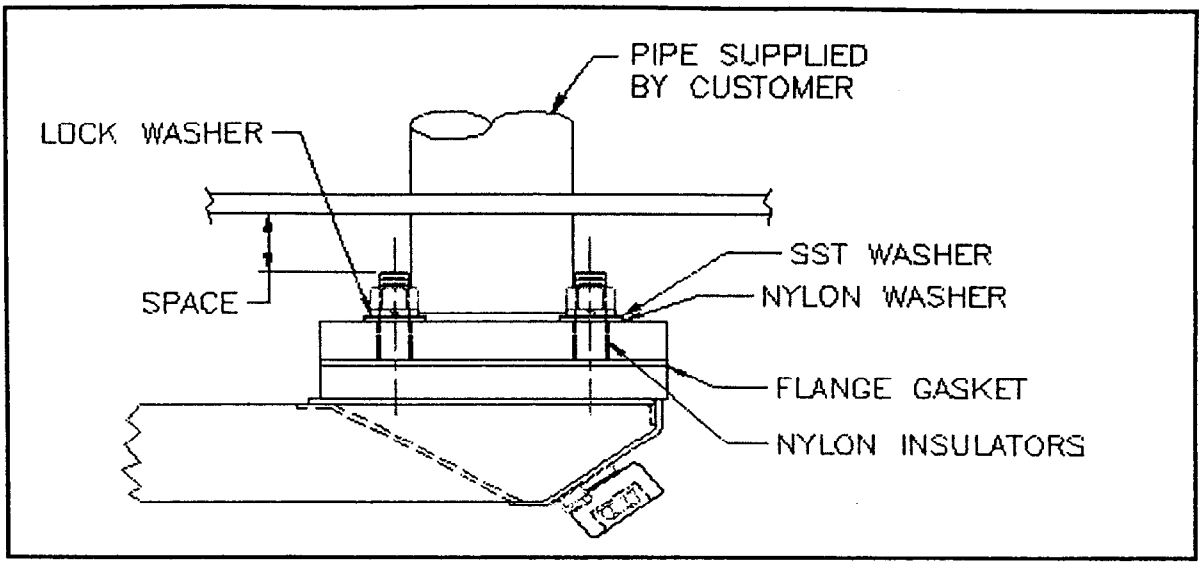

4. The mounting gaskets supplied by Duramax® Marine with every DuraCooler® are required to provide insulation between the mounting flanges.

5. Flanged DuraCoolers® are supplied with nylon insulating washers for all bolt locations. All these washers must be in place to properly isolate the DuraCooler from the hull and to minimize galvanic corrosion.

6. Brackets or studs should be mounted to hull to provide mounting support. See illustration:

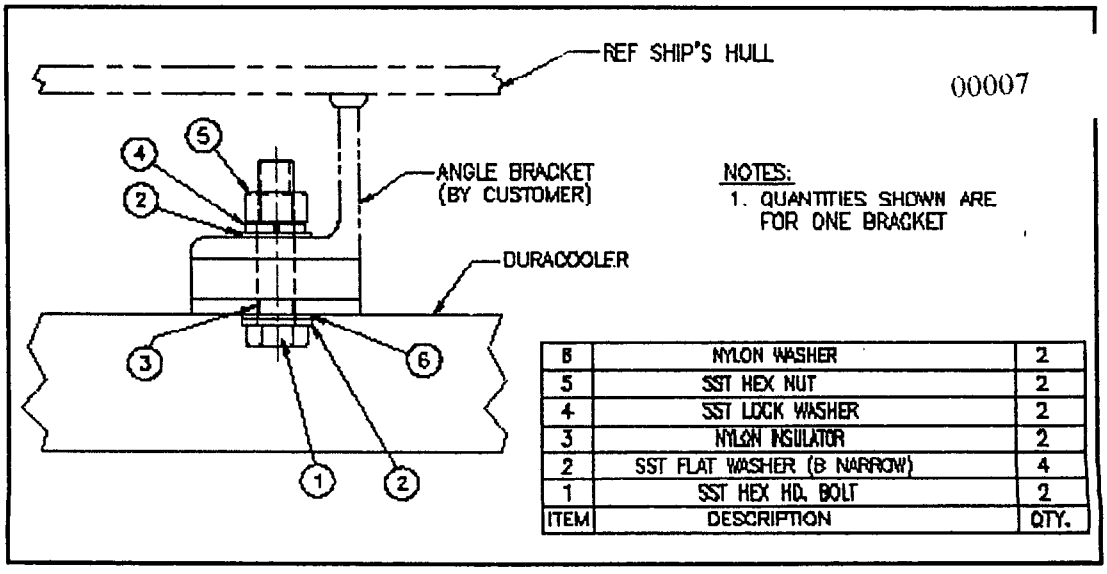

ITEM	DESCRIPTION	QTY.
6	NYLON WASHER	2
5	SST HEX NUT	2
4	SST LOCK WASHER	2
3	NYLON INSULATOR	2
2	SST FLAT WASHER (6 NARROW)	4
1	SST HEX HD. BOLT	2

7. Use only the special bolts and washers provided by Duramax® Marine to attach the zinc anodes to the streamlined headers of the DuraCooler®. (see illustration H in printed installation manual)

8. Recommended torque values for mounting flanges and brackets:

Recommended Torque:

SST Stud / Nut Size	Minimum	Maximum
1/2 - 13 UNC	30 foot lbs	34 foot lbs
5/8 - 11 UNC	56 foot lbs	63 foot lbs
3/4 - 10 UNC	80 foot lbs	86 foot lbs

Interior Details:

1. If you are retrofitting a DuraCooler® to a system that previously used an inboard heat exchanger, the DuraCooler® piping should bypass the heat exchanger and connect directly to the engine. Install self-venting piping between the DuraCooler® and the engine to eliminate air pockets in the cooling system. Do not use tubing or fittings that are smaller in diameter than those on the engine. If the fittings on the engine are larger than the fittings on the DuraCooler®, reduce the piping at the DuraCooler®, not the engine. Use the fewest number of elbows to minimize pressure drop. (see illustration I in printed installation manual)

2. For bottom hull installations: Two-pass type DuraCoolers® should be installed with the inlet and outlet at the high end relative to the water line.

3. For side hull installation: Connect the inlet hose to the lower connection tube to minimize air entrapment in the DuraCooler®. It is important to completely fill the unit with water and pressure test prior to launching the vessel. Use the following procedure:

A. Remove the upper drain plug at the outlet end (preferably) of the DuraCooler®.
B. Fill the DuraCooler® with coolant
C. When coolant exits the drain opening, replace the plug.
D. Repeat this procedure to refill the DuraCooler® every time it is drained.

Memorandum

Date : June 25, 2001

To : RCS, RJL, BK, AB, DH, Chuck Miller

From : Lew Foster

Subject : Maprom Engineering – article in HSB International

Attached find a copy of an article Maprom created in Holland Shipbuilding Magazine. I picked this up during my last visit to Maprom.

MAPROM ENGINEERING

Presents New Products & Systems from Duramax Marine

Maprom Engineering BV is a.o. representative for Europe of Duramax Marine products. The Dutch company with its premises in Dordrecht specialises in water-lubricated sterntube systems and other marine products including rubber sleeves, flanged and stave bearings, sterntube seals, hard-coated shaft sleeves, centrifugal lube oil filters, diesel fuel filter/water separators and associated marine products such as keel coolers, fendering systems and tow knee pusher plates.
With a wide knowledge and a vast experience gained over 30 years of its successful existence the company offers first class products for a wide variety of marine applications. Service and delivery is combined with the availability of a team of specialists ready to assist customers when it comes to applying the company's products. This unique combination in conjunction with the quality, durability, and - last but not least - environmental awareness has caused the increasing demand for products and services of Maprom Engineering.

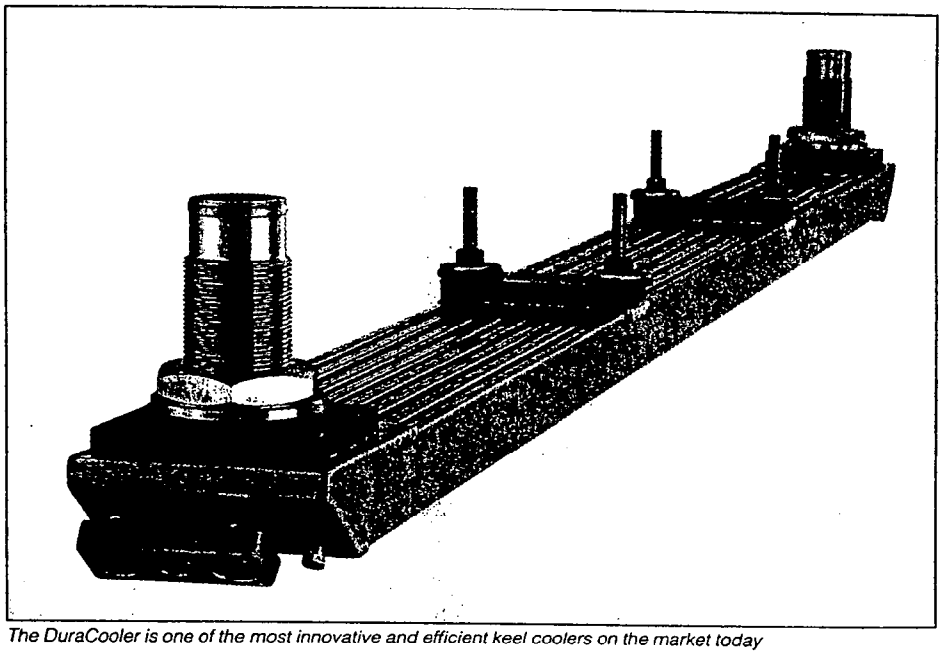

The DuraCooler is one of the most innovative and efficient keel coolers on the market today

New Advanced Polymer

A new engineering product brought to market is the new advanced polymer DMX. As new raw material for improved bearing and shaft life in abrasive conditions, DMX has proven to be one of the best materials available for abrasive laden environments. In laboratory testing by both Duramax Marine LLC and independent laboratories, grit had minimal effect on DMX. Wear rates were very low even after extended testing. In addition, DMX substantially reduces shaft/sleeve wear.
DMX has a low coefficient of friction at both breakaway and throughout the full operating range of shaft speeds. Laboratory tests confirm that DMX performs very well through multiple shaft reversal procedures and far better than US military specification, MIL-B-17901B (SH), requires. Lower friction means engines will operate more efficiently and conserve fuel. Furthermore, because of its low coefficient of friction, DMX performs very well at low shaft speed operations. The material produced very little noise in the shaft reversal tests, unlike other materials available on the market.
DMX has been successfully tested under operating pressures of 40 to 240 npsi and is recommended for use in a 2:1 L/D configuration. This means less material, a smaller housing and less weight.

Installation Made Easier

The DMX Locking Stave System does not require a bearing shell. Instead DMX staves equal in length to the housing are alternated with rubber staves that are axially longer than the bearing housing.
A retaining ring bolted on the end of the housing axially compresses the rubber staves, which in turn expand circumferentially to tightly lock all the staves in place. This prevents rotation of the bearing.
Furthermore, since the bearing breaks down into staves, installation and removal is easier. It is not necessary to remove the shaft to replace the bearing staves. DMX can replace oil-lubricated babbit bearings in many applications. This means oil lubricated systems are no longer necessary. If an application requires periods of no lubrication, DMX performs well under operating conditions with little to no lubrication.

Cutless Bearings

Another novel engineering product marketed by Maprom Engineering concerns one of the best bearings available, the Johnson Cutless Bearing.
Some bearing manufacturers use centerless grinding to finish the outside diameter. Centerless grinding the shell on a sleeve bearing provides a fine finish, but it may not be an indication of a high quality bearing. Since the centerless grinding process does not take the inside diameter of the bearing into account, the centers of the outside diameter and inside diameter may not be the same. When installing a bearing like this into a housing, the shaft may be off-center in the bearing.
Johnson Cutless Bearings are machined on the inside diameter. Once the inside diameter is bored to the correct dimension, a mandrel is inserted and the outside diameter is turned to the correct dimension. This results in good bearing concentricity and provides a quality product one can trust.

Quality Inspection

After machining the bearings, Duramax Marine LLC inspects them to verify the accuracy of the dimensions. Plug gages, the most accuraat way to measure a rubber bearing, are used on bearings for shaft sizes under 6-inches in diameter. For larger sizes, Duramax Marine LLC inspectors use ID micrometers. The bearings are also inspected for blemishes, imperfections and delamination in both the rubber and shell material. The bond between the rubber and shell material is also checked.
Duramax Marine LLC has gone to even greater lengths to provide the best quality and highest performing bearings available. Johnson Cutless Bearing materials meet all requirements of MIL-B17901B Class II. This United States military specification is more than just a classification approval; it is a stringent set of tests that a bearing must pass to become approved. No other bearing manufacturer in the world has passed every aspect of this test and is currently on the Qualified Products List.
When a company is dedicated to producing the highest quality bearings, R&D becomes a critical aspect of creating technology for the industry. Duramax Marine LLC has 40 years of experience in the bearing business and operates a bearing test laboratory for the development of new bearing materials and performance testing of competitive materials. As a result, Duramax

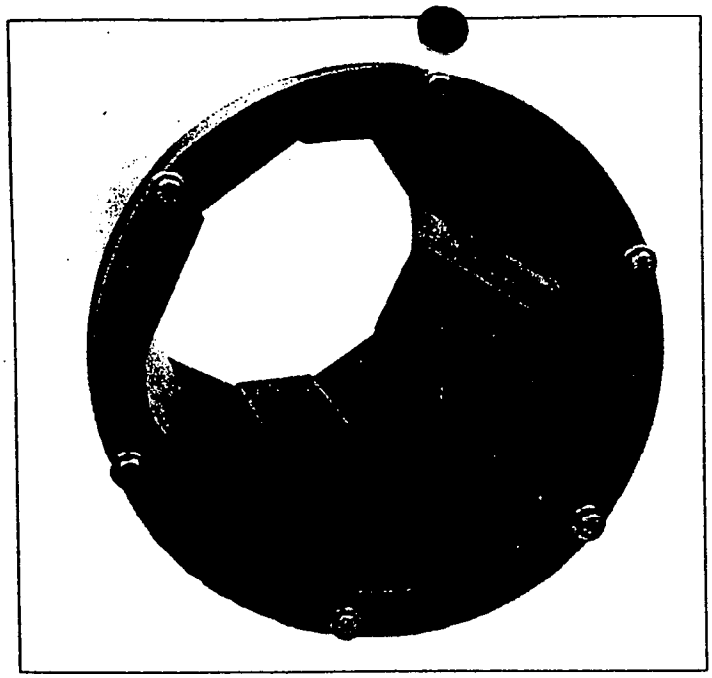

The advanced polymer DMX has proven to be one of the best materials available for abrasive laden environments

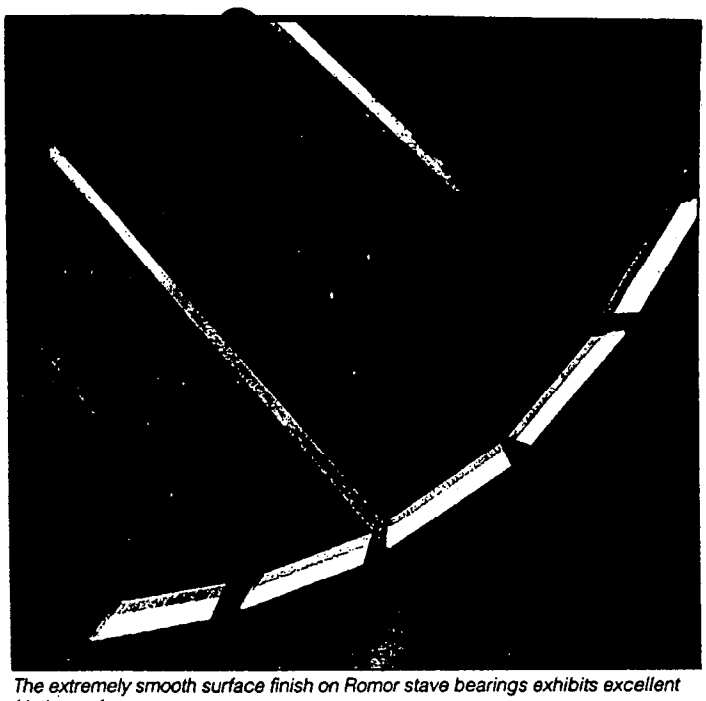

The extremely smooth surface finish on Romor stave bearings exhibits excellent friction peformance

Marine LLC is looked to as the leader in bearing technology and will continue to innovate and to provide you with longer lasting, better-performing bearings.

In addition to high quality bearings, Duramax Marine LLC is committed to having the bearings available whenever needed. This is accomplished with field warehouses around the world. Duramax Marine LLC also has one of the largest distribution networks in the industry. The answer to bearing needs is only a telephone call, fax or email away. If the bearing is not available locally, chances are it can be shipped from another location from stock.

Romor Stave Bearing

Romor stave bearings have been used in US Navy and industrial applications for over 20 years with exceptional results. Romor I continuously meets or exceeds the stringent operational expectations of both military and civilian customers. The landed rubber bearing design has been in service for approximately 80 years. While there have been significant improvements to materials and design, the basic principle lives on.

The elastic characteristic unique to rubber enables the bearing surface to deform and create a natural pocket encouraging the generation of a hydrodynamic lubricating water film. Since the rubber is elastic, it creates a seal on both the leading and trailing edges, as well as, the ends of the bearing land areas. It is this action that provides the superior hydrodynamic grit rejection performance that can be seen in landed rubber bearings. Romor I is used in particle contaminated water with excellent results. These attributes are only a few of the reasons why rubber provides superior performance versus hard surfaced, non-elastic bearings. Romor I stave bearings routinely last for 8-9 years in rugged US Navy applications.

Excellent Friction Performance

The extremely smooth surface finish on Romor I stave bearings, 15-20 micro inches, exhibits excellent friction performance at both very low shaft revolutions and extremely high shaft revolutions. This smooth surface also accelerates the break-in or run-in period that all bearings must go through in order to operate at the highest efficiency.

Duramax Marine LLC manufactures Romor I bearings to US Department of the Navy, Naval Ship Systems Command specification drawing 803-1385664. This specification identifies ten standard stave widths that are machined with 10 degree side angles. Individual stave thickness is generally finished in standard 1/16 and 1/8 inch oversized increments to accommodate shaft or journal wear. However, if an application requires a non-standard thickness and/or side angles, the company's flexibility allows to meet all needs. This makes retrofitting applications, such as lignum vitae bearing systems, possible.

Duramax Marine LLC is dedicated to continuing research and development to introduce new products and to improve existing products. It works closely with the US Navy and other Navies to meet their constantly evolving requirements. The scope of this work includes joint design and laboratory testing of new concepts and ideas. The company is fully equipped with an in-house test facility and has multiple test beds that are operated on a full time basis. The focus is on "system wear" which takes into account both bearing and journal wear. Measuring system wear provides a complete picture of performance. Even if a bearing lasted forever, if it wears the journal at an accelerated rate, the effects of long bearing life are negated.

Rectangular Tube Cooler

In the commercial marine industry one needs every competitive advantage one can get. That's why Duramax Marine has developed the DuraCooler - one of the most innovative and efficient keel coolers on the market today. DuraCooler's unique streamlined header design enhances internal coolant and external seawater flow while reducing system pressure drop. The new design also provides optimum heat transfer efficiency, resulting in smaller keel cooler requirements and a reduction in cooling system costs. On replacement retrofits, this increased cooling capacity within the same installation footprints provides the vessel owner an additional cooling safety factor.

Every DuraCooler is manufactured with 90/10 CuNi tubing; a high-strength material with exceptional heat transfer properties that has excellent resistance to corrosive and erosive effects of seawater. Each header is manufactured with heavy gage material for exceptional strength and durability. Moreover, the two-piece header design allows for brazing seams inside and outside with premium-grade silver solder - providing maximum strength and leak resistance in a single-piece structure that is easier to install. Every DuraCooler is pressure tested before it is shipped from the factory.

Whether new construction or retrofit, the DuraCooler is probably the perfect fit for all needs. A computerized sizing system is used for processing engine specification data, hull location and one's vessel's operating conditions to provide a more precise method of keel cooler selection and provides the correct cooling capacity for maximum engine loads and operational efficiency. The end result is an effectively sized keel cooling system, without guesswork.

Product Support

For over 35 years, Duramax Marine has been a leading manufacturer in the commercial marine industry. The company is proud to offer high quality, engineered product lines such as Johnson Cutless Rubber Bearings, Duramax Sealing Systems, Johnson Commercial Dock Bumpers and now, the new DuraCooler. Duramax Marine is continuously searching for ways to improve all products in its extensive research and development facilities.

Through Maprom Engineering one receives an unparalleled level of service from professional staff who stay in touch and understand that the client's success is Maprom's success. Maprom Engineering and Duramax Marine, the perfect match to help you get the competitive edge.

For further details, please contact:
Maprom Engineering, Dordrecht,
The Netherlands; Phone +31 78 618 0877,
Fax +31 78 618 3034.

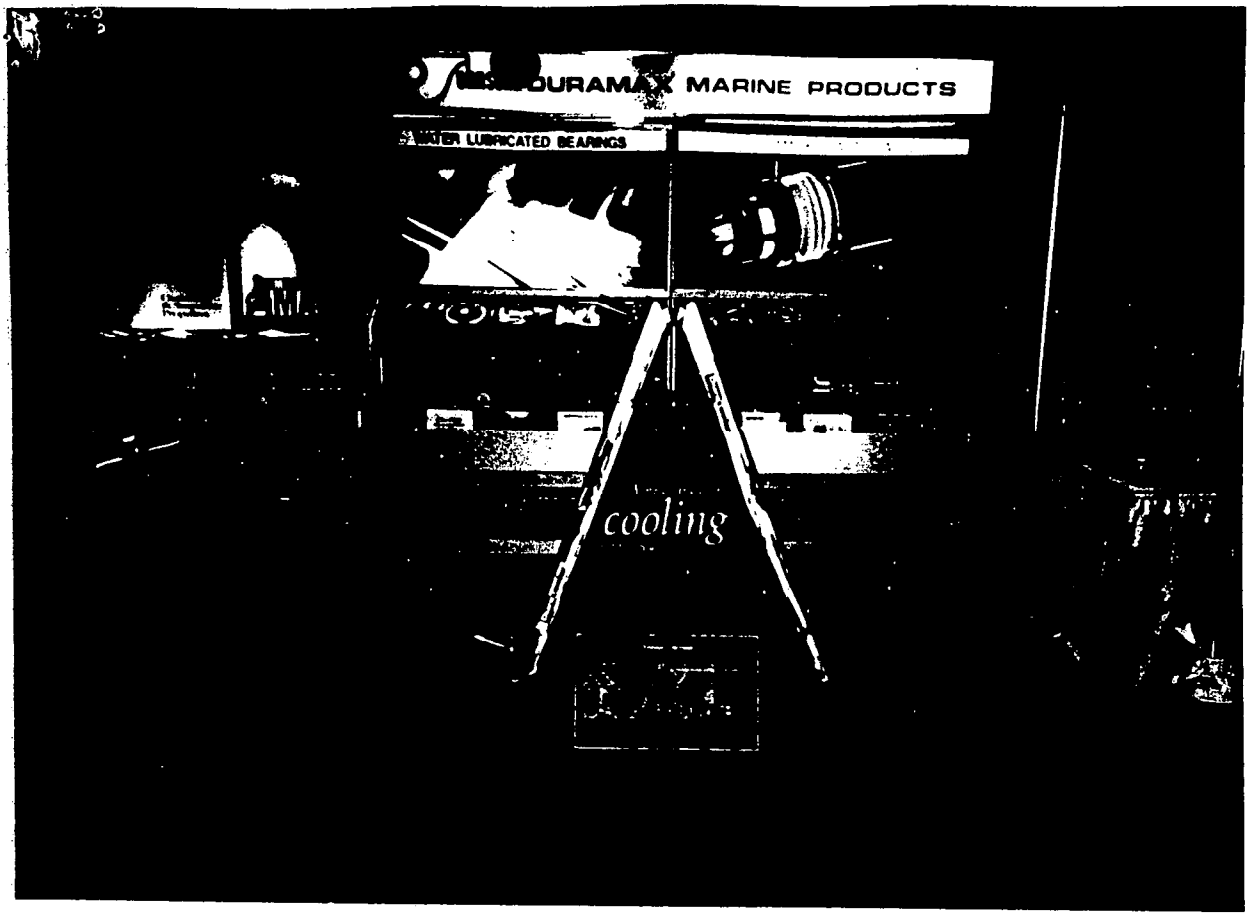
MARINE PRODUCTS
WATER LUBRICATED BEARINGS
cooling

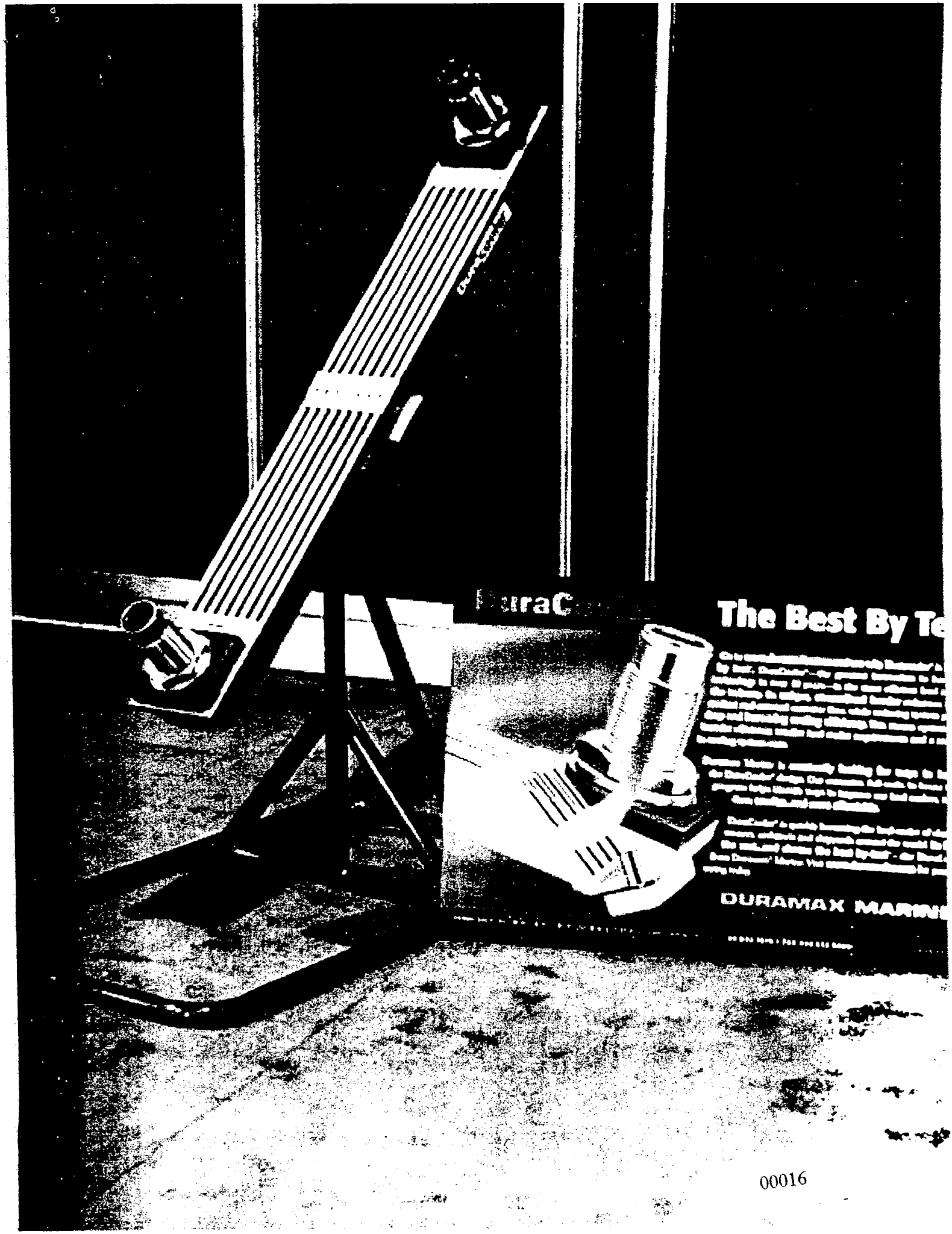
The Best By Te
DURAMAX MARIN

The Best By Test™

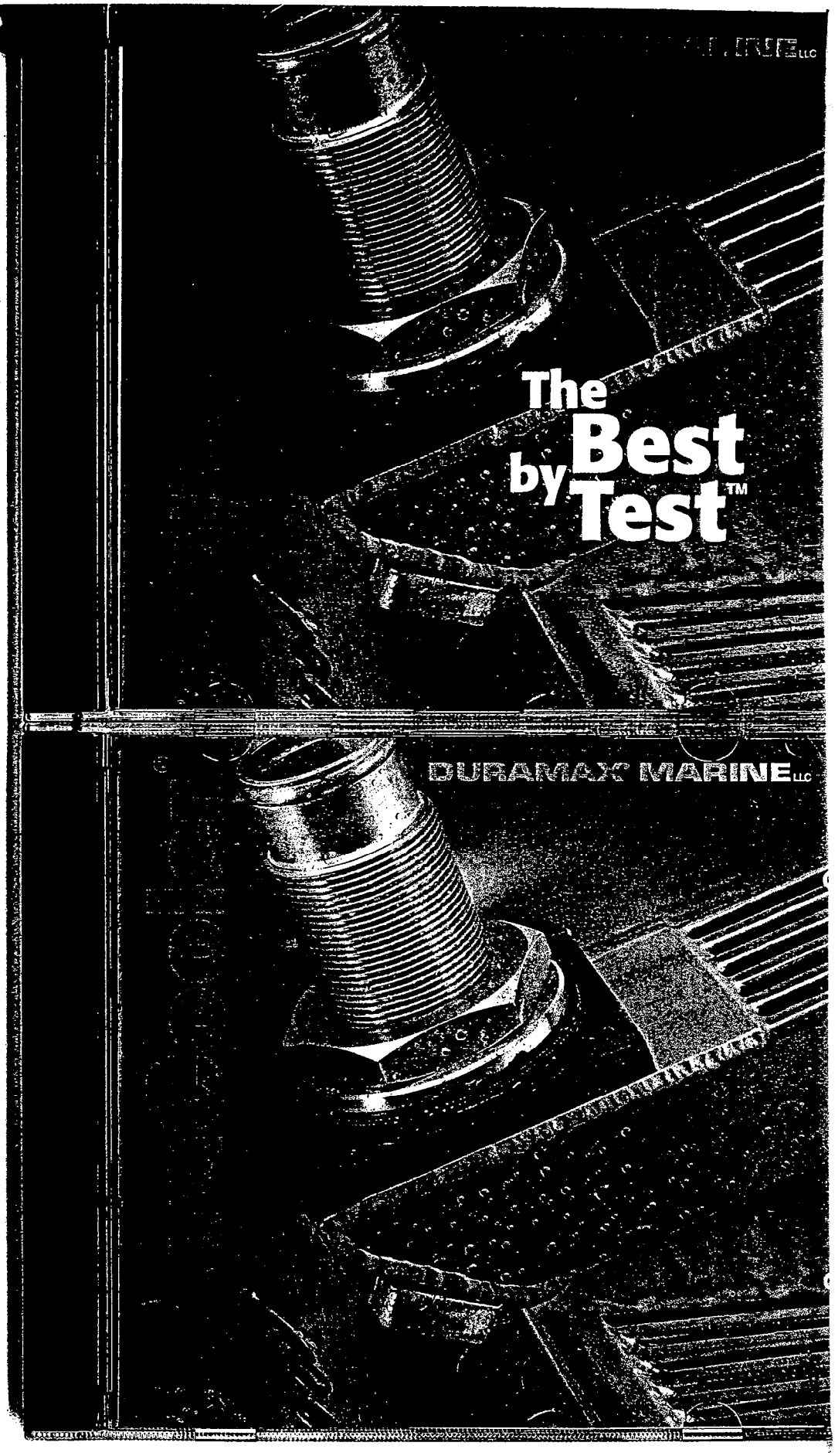
The Best by Test™
DURAMAX MARINE LLC

READING MODEL NUMBERS

SC-418DP-196 ***(Double Pass DuraCooler®)***
SC - Streamlined Cooler
4 - Number 4 Size Tube
18 - Number of Tubes
DP - Double Pass DuraCooler®
196 - Inches in Length from Center of Nozzles to Center of Studs

SC-418-196 ***(Single Pass DuraCooler®)***
SC - Streamlined Cooler
4 - Number 4 Size Tube
18 - Number of Tubes
196 - Inches in Length from Center of Nozzle to Center of Nozzle

SC-418PF-196 ***(Flanged Mount DuraCooler®)***
SC - Streamlined Cooler
4 - Number 4 Size Tube
18 - Number of Tubes
PF - Pipe Flange Mount
196 - Inches in Length from Center of Flange to Center of Flange

SC-418H-196 ***(H-Bracket Fasteners)***
SC - Streamlined Cooler
4 - Number 4 Size Tube
18 - Number of Tubes
H - H-Bracket Mounting
196 - Inches in Length from Center of Nozzles to Center of Nozzle

00019

AutoCAD® is a registered trademark of AutoDesk®, Inc.

REGISTRATION

Thank you for using DuraCooler® keel coolers in your vessel design. Our goal is to help you "streamline" your future design projects. If you have any questions about this CD-ROM, please contact us at ***info@duramaxmarine.com.***

This CD-ROM must be activated for use by registering online at ***www.duracooler.com.*** Registration requires your company's consent and agreement to the following Conditions of Use and will allow you to receive periodic updates and revisions to the DuraCooler® drawings that Duramax® Marine elects to provide in connection with this CD-ROM.

DURACOOLER® DRAWINGS CONDITIONS OF USE

BY REQUESTING OR USING THE DURAMAX® MARINE CD-ROM CONTAINING DURACOOLER® DESIGN DRAWINGS, WE AGREE TO THE FOLLOWING CONDITIONS OF USE OF THE CD-ROM:

1. All rights in the contents of and the CD-ROM belong to Duramax® Marine, including all intellectual property rights. The CD-ROM is subject to a copyright interest in Duramax® Marine.
2. My company may use the contents of the CD-ROM solely for my actual application design drawings specifying a Duramax® Marine DuraCooler® and for no other purpose.
3. We may use the drawings only after we have contacted Duramax® Marine and obtained sizing recommendations from Duramax® Marine for the specific design drawing and related application.
4. Before any use of the CD-ROM contents, we must verify with Duramax® Marine that the CD-ROM contains the most current version of the drawings of the DuraCooler® products.
5. We may not use the drawings for our own promotional, advertising or other purposes without the prior written consent of Duramax® Marine.
6. We must preserve and reproduce the Duramax® Marine copyright notice on all drawings and if none is present, affix a copyright notice to any reproductions as follows: Copyright 2000 Duramax® Marine.
7. **YOUR COMPANY AGREES TO HOLD HARMLESS DURAMAX® MARINE FROM ANY LIABILITY OR LOSSES ASSOCIATED WITH YOUR USE OR LOSS OF THE CD-ROM.**
8. **THE CD-ROM AND ALL OF THE INFORMATION CONTAINED THEREIN REGARDING DURAMAX® MARINE DURACOOLERS® IS PROVIDED AS-IS WITH NO WARRANTIES AND ALL IMPLIED WARRANTIES OF MERCHANTABILITY OR FITNESS FOR A PARTICULAR PURPOSE ARE HEREBY EXCLUDED.**

CONTENTS

- DuraCooler® DXF and DWG files for Single and Double Pass Nozzle-type coolers for tube sizes 2 and 4.
- Please contact Duramax® Marine LLC for Flanged-mount, H-Bracket and size 3 tube drawings.

AUTOCAD® 14 USER INSTRUCTIONS

If you have not done so already, please visit ***www.duracooler.com*** and fill out a sizing request form on the DuraCooler® page. Duramax® Marine LLC will provide you with a computer sizing and recommend a suitable model number for your project.

To insert a scaled DuraCooler® drawing file into your current project:

- Start AutoCAD® 14.
- Open the drawing file for the vessel you are designing.
- Click on the "Insert" command in AutoCAD®.
- When popup window appears, insert DuraCooler® CD-ROM into CD-ROM drive.
- Click on the CD-ROM drive and a list of cooler drawings will appear.
- The cooler drawings are stored by model number in AutoCAD® 14 DWG and DXF format on the CD-ROM. Note: The model number will be void of dashes and have an "A" on the end to designate revision and drawing type.
- Please refer to the recommendation sheet for the DuraCooler® model recommended by Duramax® Marine LLC for your application.
- Locate file on list of model sizes from CD-ROM.
- Click "Open."
- Click "OK."
- Pick an insertion point on the drawing.
- Verify the X & Y scale factors are 1.
- Click "Enter."
- Verify rotation is 0.
- Click "Enter." The file will be inserted as a block.
- The block must be exploded before you can move the views and nut/washer details into place.

USING WITH OTHER TYPES OF CAD SOFTWARE

- The cooler drawings are stored in AutoCAD® 14 DWG and DXF format on the CD-ROM. Choose the required DWG file by DuraCooler® model number. Note: The model number will be void of dashes and have an "A" on the end to designate revision and drawing type.
- Use your CAD Software's DXF translator to convert either an AutoCAD® DXF or DWG file to a supported and insertable file type.
- Insert the translated file like a block or open as a drawing.

DURACOOLER1.TIF

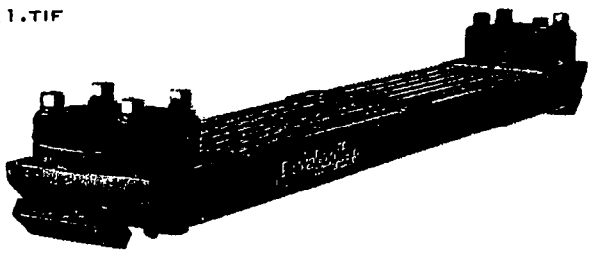

DURACOOLER2.TIF

DURACOOLER3.TIF

DuraCooler® PRODUCT IMAGES 9/00

Duracool.tif

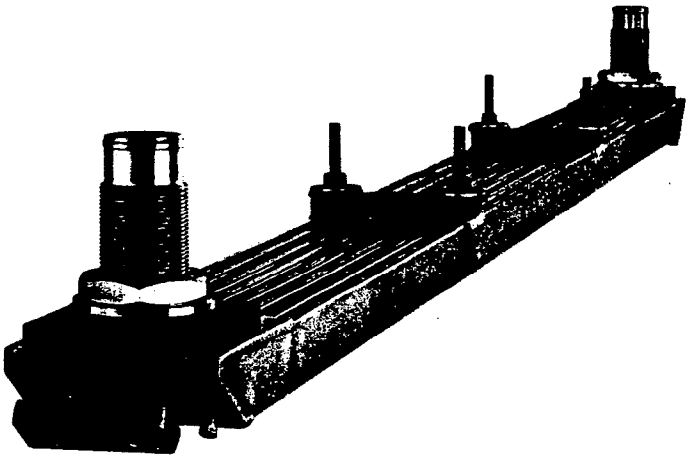

DuraCooler®

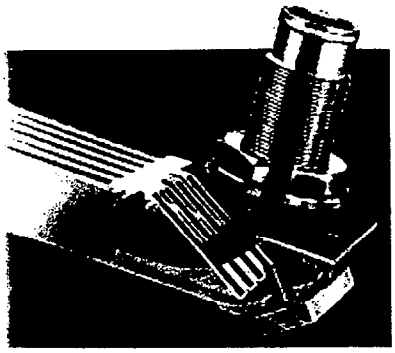

- 90/10 cupro-nickel tubing is resistant to waterflow erosion and serves as an antifoulant.
- Compact, one-piece design makes installation simple.
- Streamlined header design reduces pressure drop in water flowing through the cooler. External water travels more quickly to tubes increasing the heat transfer efficiency of the cooler.
- Custom-sized for your engine specifications and operational requirements.
- Available with through-hull type fittings or non-through-hull flanges.

Tube Cooler Success / Major Breakthrough Testing Results / Commitment to Design

DuraCooler® Sizing Sheet(s)

English	online	(download PDF)
Spanish	online	(download PDF)
Portuguese	online	(download PDF)

DuraCooler® CD Drawings

If you are a commercial boat builder or designer and would like to receive our DuraCooler® CD-ROM, (includes drawings to scale). Click Here to register.

DuraCooler® Installation Manual

(download PDF)

Success of the Rectangular Tube Cooler

- In 1946, the first rectangular tube keel cooler came to the marine market.
- For nearly half a century, this design has enjoyed considerable success in the marine industry for keel cooling of heat sources on marine vessels.
- This type of cooler has been successful in the marine industry for three reasons:

00023

1. Large amounts of tubing surface area in a relatively **small, compact footprint**. This equates to a highly efficient heat exchange device.
2. **Durability of design**: In many applications, the design has with stood more than twenty years of continuous use in severe marine environments.
3. **Ease of installation**: Shipyard workers appreciate the ease of installation of the one piece keel cooler.

back to top

First Major Breakthrough in Keel Cooling Technology

- In 1997, Duramax® Marine LLC initiated a **research and development program** to identify opportunities to improve the operational efficiency of the square-headed outboard keel cooler.
- **Finite element computer** studies were conducted to determine internal and external flow patterns, pressure drop and heat transfer characteristics for different heat exchanger geometries.
- Flow pattern studies determined that the outside tubes, tubes number 1 and number 8, **(the outside tubes) in the square-headed keel cooler tested were being used inefficiently** despite the fact these tubes have the greatest potential heat rejection per linear foot.
- The design of the existing square header is the reason for this inefficiency.
- Duramax® Marine LLC immediately **began to develop a more efficient header design**.
- Duramax® Marine LLC engineered the new streamlined header design to further **enhance interior and exterior flow patterns** and, at the same time, **reduce the overall pressure drop** within the keel cooler unit.

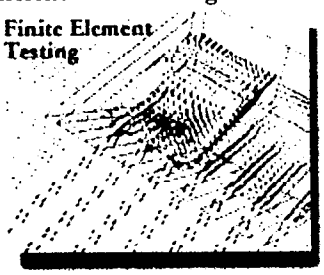

- In initial testing, the design also **increased coolant flow to the outside tubes** that had been used less efficiently in the traditional keel cooler design.
- Coolant flow distribution **in the outer tubes** increased 35% **after the geometry modifications**.
- Heat rejection **in the outer tubes** jumped 45%.
- Overall heat transfer **in the DuraCooler® SC-48-96** increased 17% over the square-headed unit of equal size in initial testing.
- The DuraCooler® design **with increased** coolant flow to the outside tubes will result in smaller units versus traditional square headers and lower costs.
- Overall **footprint** may be **reduced** as much as **42%** in some units.

(see graphs below)

back to top

Testing Results

Traditional Design Tested

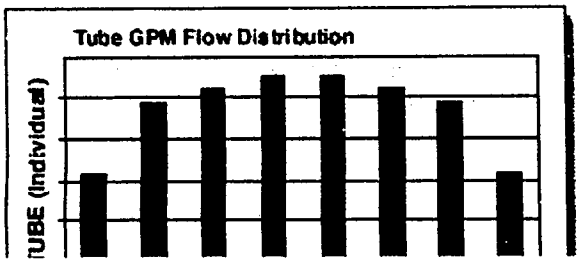

DuraCooler®

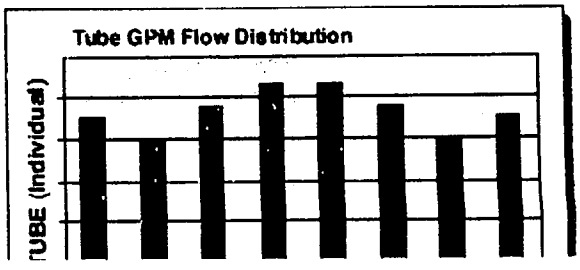

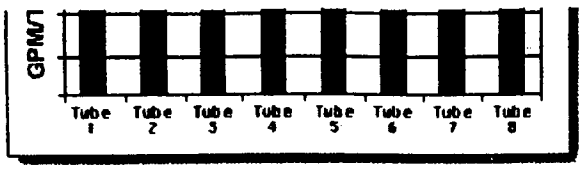

Computer modeling of the traditional design keel cooler tested showed poor coolant flow through tubes 1 & 8.

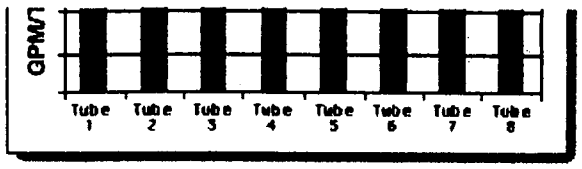

DuraCooler® header design change produced an increase of 35% in the outside tubes.

Traditional Design Tested

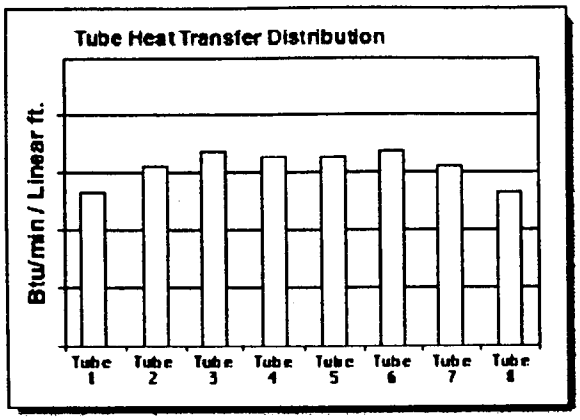

Computer modeling of the traditional design keel cooler tested indicated the outside tubes were being used least efficiently even though these tubes had the greatest potential heat rejection per linear foot.

DuraCooler®

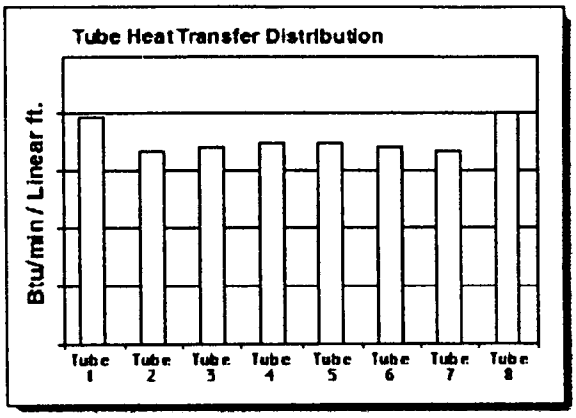

DuraCooler® header design increased heat transfer in the outside tubes by 45%!

Note: Study above conducted on a SC-48-96 and equivalent size square-head unit.
Studies conducted by: Flow Simulations Inc. e-mail: info@flowsimulations.com

Overall heat transfer in the DuraCooler SC-48-96 increased by 17% over the square-headed, traditional design keel cooler unit tested of equal size in initial testing.

Back to top

Commitment to Design Improvements

- Duramax® Marine LLC, with promising results from the finite element testing proceeded to the next phase of testing, actual unit testing in its research pond.
- In 1998, Duramax® Marine LLC built an **800,000-gallon testing facility** to better emulate marine conditions in a controlled environment.
- Testing facility can test keel coolers **20 feet long and weighing as much as two tons**

- Temperature drop, pressure drop and flow rates are monitored and recorded.
- Initial tests on the same size square-head keel cooler that was tested in the laboratory **validated the computerized testing**.

Back to top

Duramax® Marine LLC
17990 Great Lakes Parkway
Hiram, OH 44234 USA
Phone: 440.834.5400
Fax: 440.834.4950 or Fax: 800.497.9283 (US and Canada)
© 2001, Duramax® Marine LLC. All rights reserved.

00026

VERSION 2 NATIONAL FISHERMAN

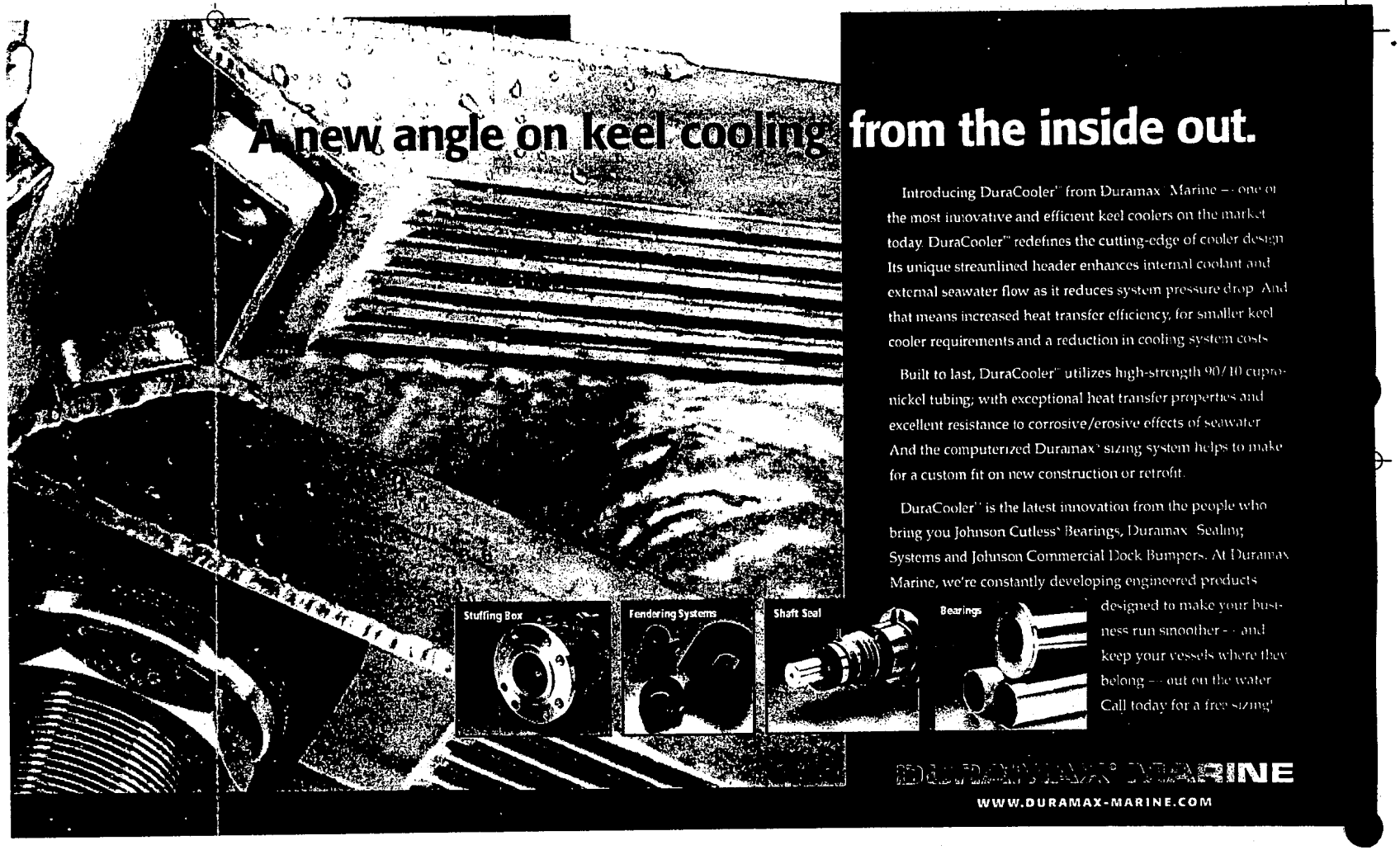

A new al
Buckeye
16025 JOHNSON STREET • P.O. BOX 67 • MIDDLEFIELD, OHIO 44062-0067 • 440.632.1616 • FAX 440.632.5265

INLAND RIVER GUIDE

DURAMAX® MARINE

Quality Engineered For Better Performance

JOHNSON CUTLESS® DEMOUNTABLE RUBBER STAVE BEARINGS

Individual staves install around shaft in stern tube or strut. Assembly can be made with shaft in place.

REVOLUTIONARY NEW COOLING TECHNOLOGY—DURACOOLER(M)(R)

With an innovative streamlined header, the DuraCooler(M)(R) increases cooling efficiency for new construction and retrofit. The new design enhances internal coolant and external seawater flow, increasing heat transfer efficiency while reducing system pressure drop. For new construction, this results in smaller keel cooler requirements and a reduction in cooling system costs.

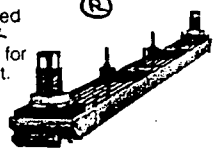

JOHNSON CUTLESS® SLEEVE AND FLANGED BEARINGS

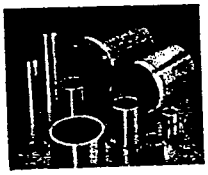

Cut maintenance time with naval brass Sleeve or Flanged Bearings. Non-Metallic Sleeve Bearings, also available, are ideal where corrosion or electrolysis is a problem. Full range of sizes.

JOHNSON HEAVY STUFFING BOXES AND STERN CASTINGS

Select from bronze, steel or aluminum. "Air-Seal" type features inflatable rubber ring which seals around shaft, allows packing change without dry docking. Full range of types and sizes.

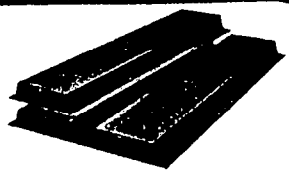

JOHNSON TOW KNEES
Single Tow Knee Pusher Plates

Quality engineered Johnson Tow Knee Pusher Plates provide superior protection. These impact absorbing bumpers help give vessels longer and better service life. Choice of steel or aluminum plate.

Double Tow Knee Pusher Plates

Double your protection plus mounting and welding ease with twin 2 inch thick rubber pads securely vulcanized to a single steel or aluminum plate. Count on tough Johnson Tow Knees to stand up under rugged operating conditions.

Precurved and Segmented Corner Tow Knee Pusher Plates

These curved tow knees designed for maximum corner protection are engineered to absorb and cushion impact over long periods and varied operating conditions. Their 2-inch quality rubber pad is securely bonded to the plate, assuring long-lasting trouble-free service.

JOHNSON COMMERCIAL DOCK BUMPERS

Duramax offers a wide variety of durable rubber fendering for vessels and docks including D-sections, O-sections, Rectangular and Wing Types – all featuring built-in absorbing qualities.

DURAMAX® MARINE LLC

15986 Valpast Road
P.O. Box 250
Middlefield, Ohio 44062-0250 U.S.A.

Phone: (440) 632-1616 Fax: (440) 632-5265 Fax: (800) 497-9283 (US and Canada)

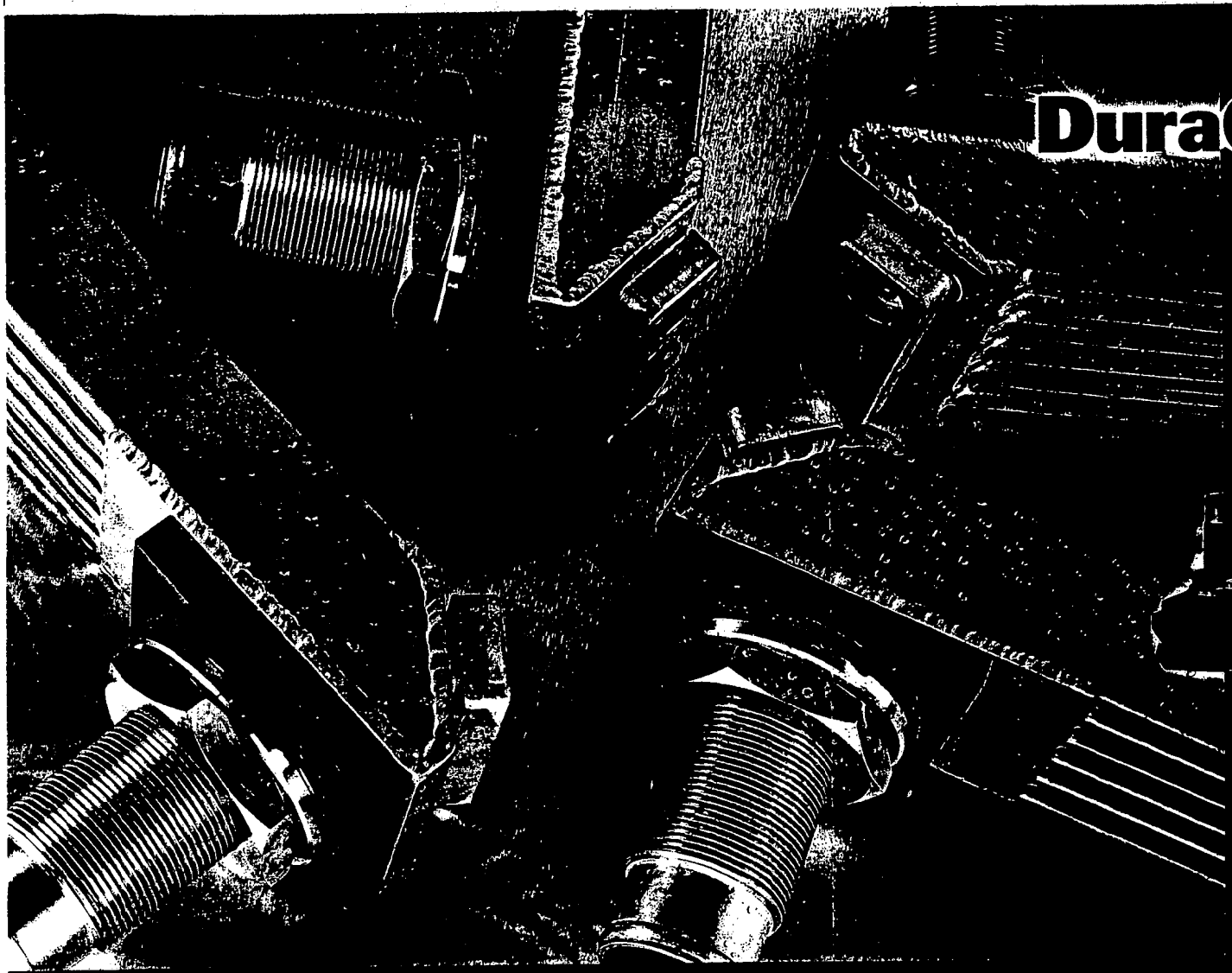

DuraCooler

The new angle on cooling technology.

- Reduced drag with streamlined header
- Brazed with premium-grade silver solder
- Optimum heat transfer efficiency
- Custom-sized for your vessel

16025 JOHNSON STREET • P.O. BOX 67 • MIDDLEFIELD, OHIO 44062 0067 • PHONE 440.632.1616 • FAX 440.632.5365

WWW.DURAMAX-MARINE.COM

As Seen In

National Fisherman

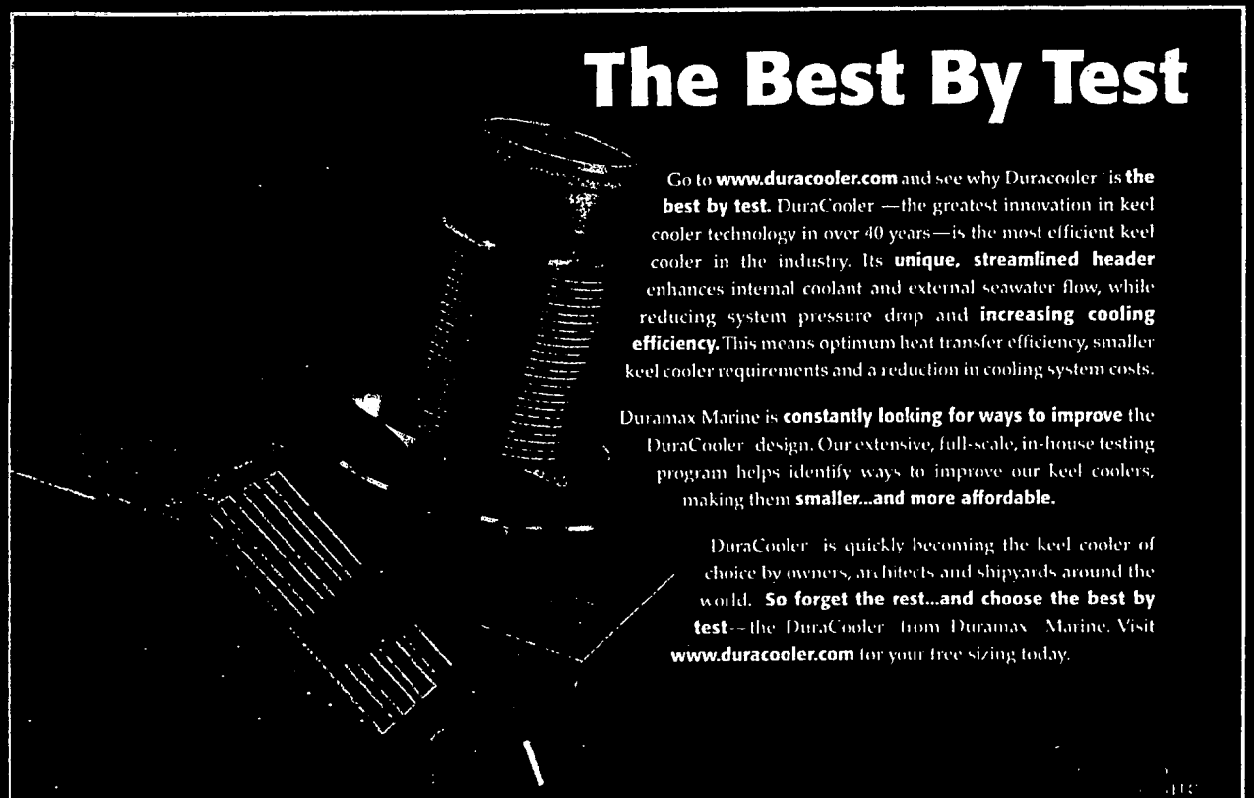

The Best By Test

Go to **www.duracooler.com** and see why Duracooler is **the best by test.** DuraCooler —the greatest innovation in keel cooler technology in over 40 years—is the most efficient keel cooler in the industry. Its **unique, streamlined header** enhances internal coolant and external seawater flow, while reducing system pressure drop and **increasing cooling efficiency.** This means optimum heat transfer efficiency, smaller keel cooler requirements and a reduction in cooling system costs.

Duramax Marine is **constantly looking for ways to improve** the DuraCooler design. Our extensive, full-scale, in-house testing program helps identify ways to improve our keel coolers, making them **smaller...and more affordable.**

DuraCooler is quickly becoming the keel cooler of choice by owners, architects and shipyards around the world. **So forget the rest...and choose the best by test**—the DuraCooler from Duramax Marine. Visit **www.duracooler.com** for your free sizing today.

FISH EXPO
NORTHWEST
Booth 446

440.632.1616 FAX 440.632.5265 WWW.DURAMAXMARINE.COM

00032

DuraCooler® keeps the pressure on!

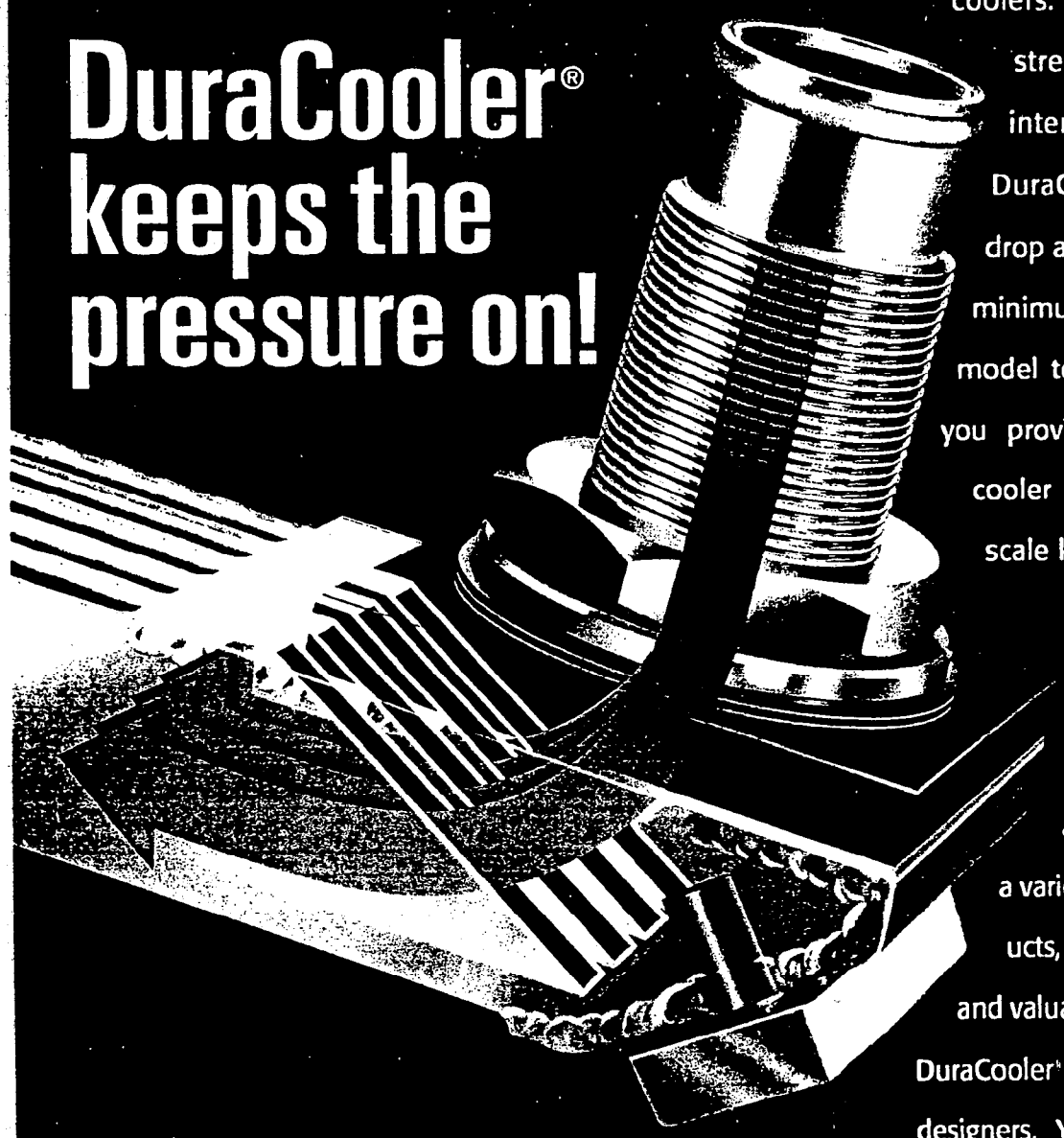

Large system pressure drops can mean larger, more expensive keel coolers. The smooth tubes, streamlined header and internal configuration of DuraCooler® keep pressure drop and keel cooler costs to a minimum. And to custom fit a model to the specifications that you provide, we base our keel cooler sizing system on full-scale keel cooler testing.

Duramax® Marine can provide you with heat exchange solutions that are field tested, along with a variety of quality marine products, customer-driven services and valuable tools, including scaled DuraCooler® drawings on CD-ROM for designers. You can depend on our commitment to innovation.

00033

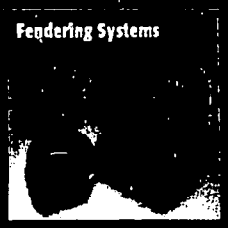

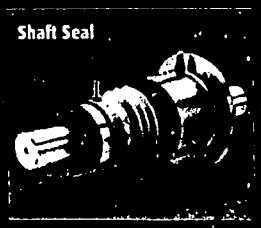

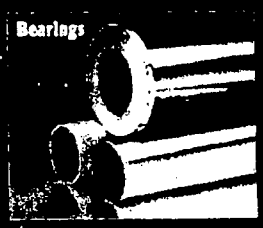

For your free sizing, or DuraCooler® designer CD-ROM, visit www.duracooler.com.

DURAMAX MARINE LLC WWW.DURAMAX-MARINE.COM

17990 GREAT LAKES PARKWAY . HIRAM, OHIO 44234 . PHONE 440.834.5400 . FAX 440.834.4950

with air filled, the collar around the boat is unlikely to be damaged or punctured if it strikes an obstruction.

Unlike Rigid Inflatable Boats (RIBs), which are easily damaged and require regular maintenance, the closed cell foam collars of the unique design are 'puncture proof' and capable of handling the kind of knocks and sheer hard work that rescue boats must withstand.

According to international expert Hamish McDonald, Director of Maritime Rescue International (MRI) at Stonehaven in Scotland, the T9000 provides an excellent combination of "a good working platform with plenty of deck space, good seakeeping and close-in handling".

The Holyhead-based company developed the new craft with the help of a 'Business Angel', following assistance from XENOS,

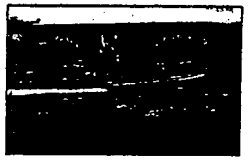

Five examples of the innovative T9000 will be built for use by the RNLI on the Thames.

Innovative, efficient DuraCooler® is redefining the cutting-edge of keel cooler design. Its **unique streamlined header** enhances internal coolant and external seawater flow to reduce system pressure drop and increase heat transfer efficiency—for smaller keel cooler requirements and a reduction in cooling system costs. DuraCooler® utilizes **high-strength 90/10 cupro-nickel tubing** for improved heat transfer and resistance to corrosive/erosive effects of seawater. Plus, the computerized Duramax® Marine sizing system helps make a custom fit on a new construction or retrofit.

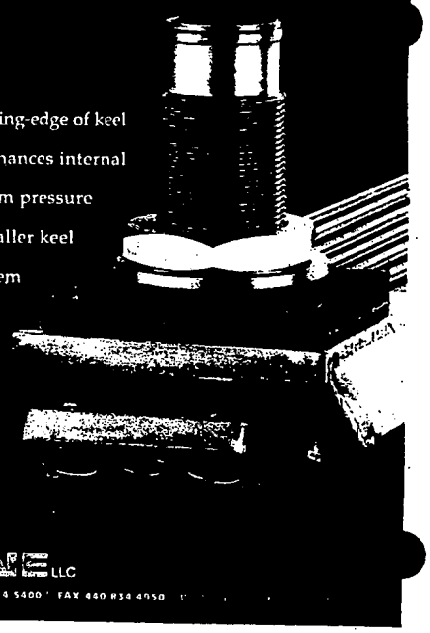

DURAMAX® MARINE LLC

17990 GREAT LAKES PARKWAY • HIRAM, OHIO 44234 USA • PHONE 440 834 5400 • FAX 440 834 4950

00036

DuraCooler™

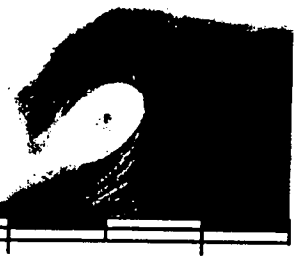

Northport Engineering LIMITED

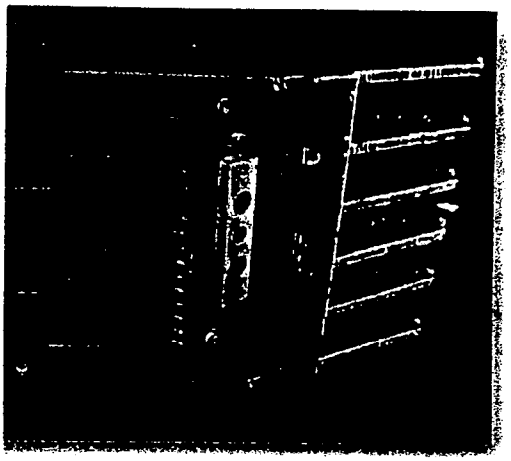

DuraCoolers™ are quickly becoming the keel cooler of choice around the world! Take, for example, Tug Waipapa, one of four harbour tugs being built at Northport Engineering Ltd in Whangarei, New Zealand. Three of these tugs are being built for Ports of Auckland Ltd and one for the Port of Tauranga Ltd. All are 22 meter vessels powered by twin CAT 3516 EIUs and will be operating in the North Island of New Zealand. The tugs will be push button controlled and each will be operated by a crew of two. The main engines are cooled by SC-418-168 units and the Ulstein propeller units, steering and winch hydraulics are cooled by SC-212-120 DuraCoolers by Duramax® Marine LLC and distributed by Morse Controls (NZ) Ltd.

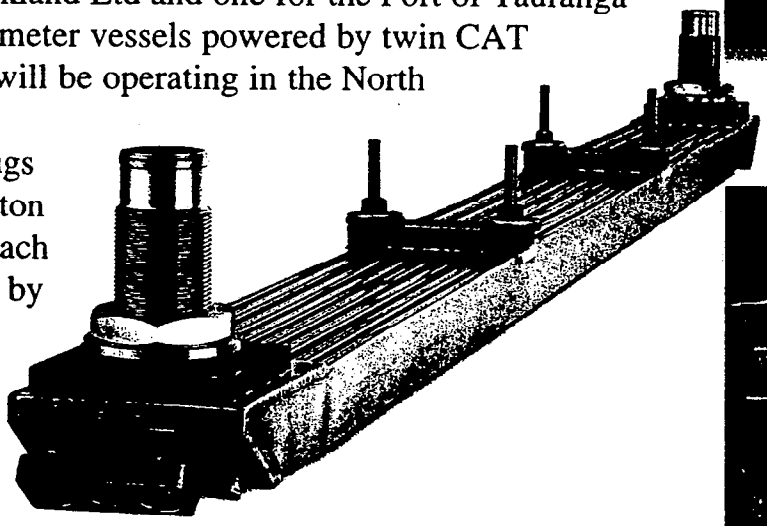

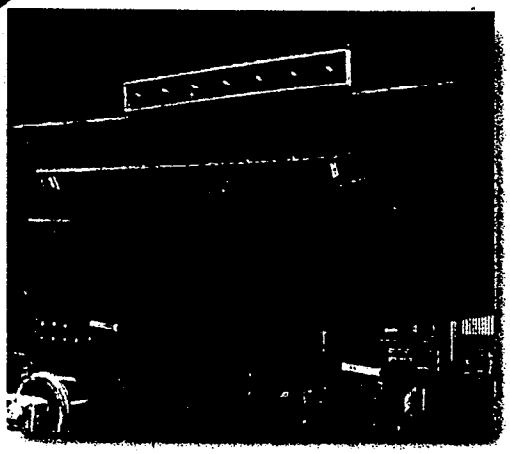

DuraCoolers are the first innovation in keel cooling technology in over half a century. Its streamlined header reduces pressure drops in the system and more efficiently uses the coolers' capacity to bring the customer a more efficient, durable keel cooler. And Duramax Marine LLC has taken the guess work out of keel cooler sizing with its years of research and development and in-house, computerized sizing system. Whether it is for retrofit or new construction, there is a size that meets your requirements.

Photos Courtesy of Ford Off Shore Services Ltd New Zealand

© 2000 by Duramax® Marine LLC file: bk/u/northport041700

DuraCooler®

MARCO SHIPYARD
SEATTLE

Broadening the scope of its shipbuilding activity, MARCO Shipyard Seattle signed a contract to design and build a pair of pilot station boats for San Francisco Bar Pilots. The all-steel, twin-screw boats will replace the two existing station boats in the Bar Pilots' total fleet of five vessels, each of which is designed to take pilots safely to and from ships entering, leaving, or transiting the San Francisco Bay waterways. One station boat is on duty outside the Golden Gate Bridge at all times, under all conditions, to provide this service.

The new MARCO pilot boats will be 104 feet long, with an overall beam of 29 feet 6 inches, and a depth of 12 feet 7 inches. They will be powered by CAT® 3508B diesels and keel cooled with SC-414-42, SC-420-84 and SC-28-54 DuraCoolers®, the latest innovation in keel cooling technology by Duramax® Marine LLC.

DuraCooler® keel coolers represent a significant advancement in keel cooling technology. Its streamlined header reduces pressure drops in the system and more efficiently uses the coolers' capacity to bring the customer a more efficient, durable keel cooler. And Duramax® Marine LLC has taken the guess work out of keel cooler sizing with its years of research and development and in-house, computerized sizing system. Visit www.duracooler.com to receive your free sizing today.

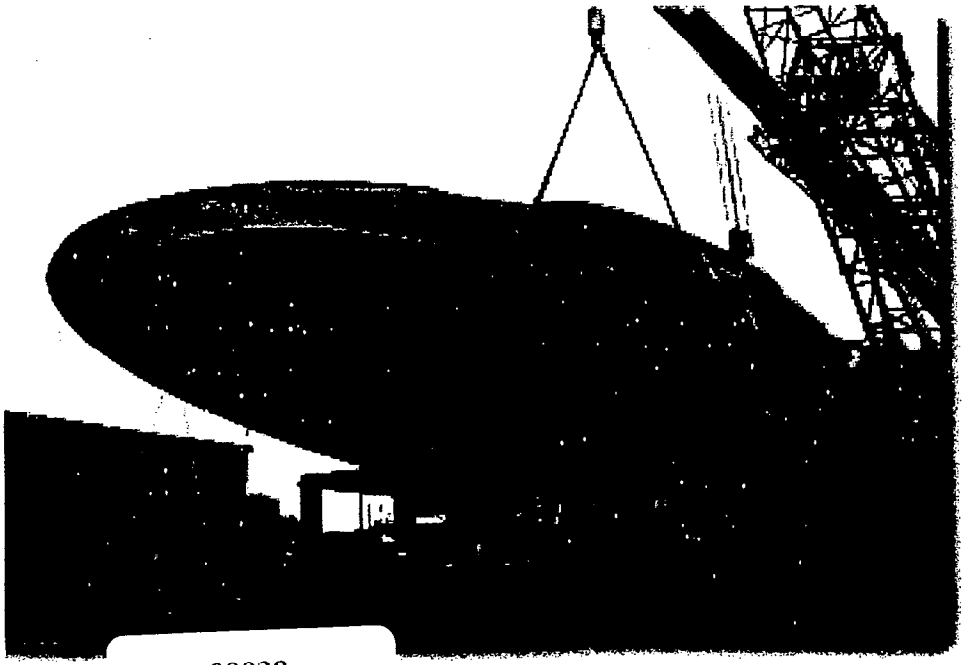

CAT® is a registered trademark of Caterpillar Inc.
Photo & Text compliments of Marco Shipyard

© 2000 by Duramax® Marine LLC
file: g/mar/admin/market/sellitools/marcosfpilots100500B

DuraCooler®

Single Pass Unit

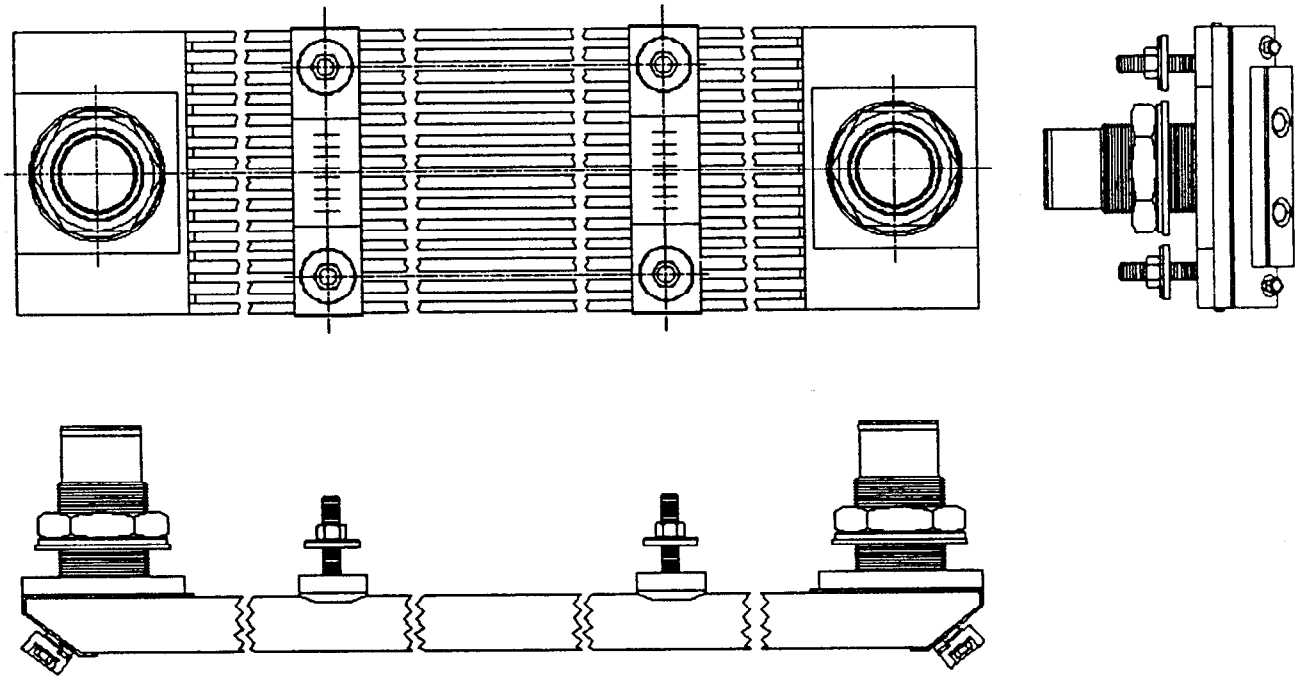

00039

file: bk/c/mydoc/duradwgexamp

DuraCooler®

Double Pass Unit

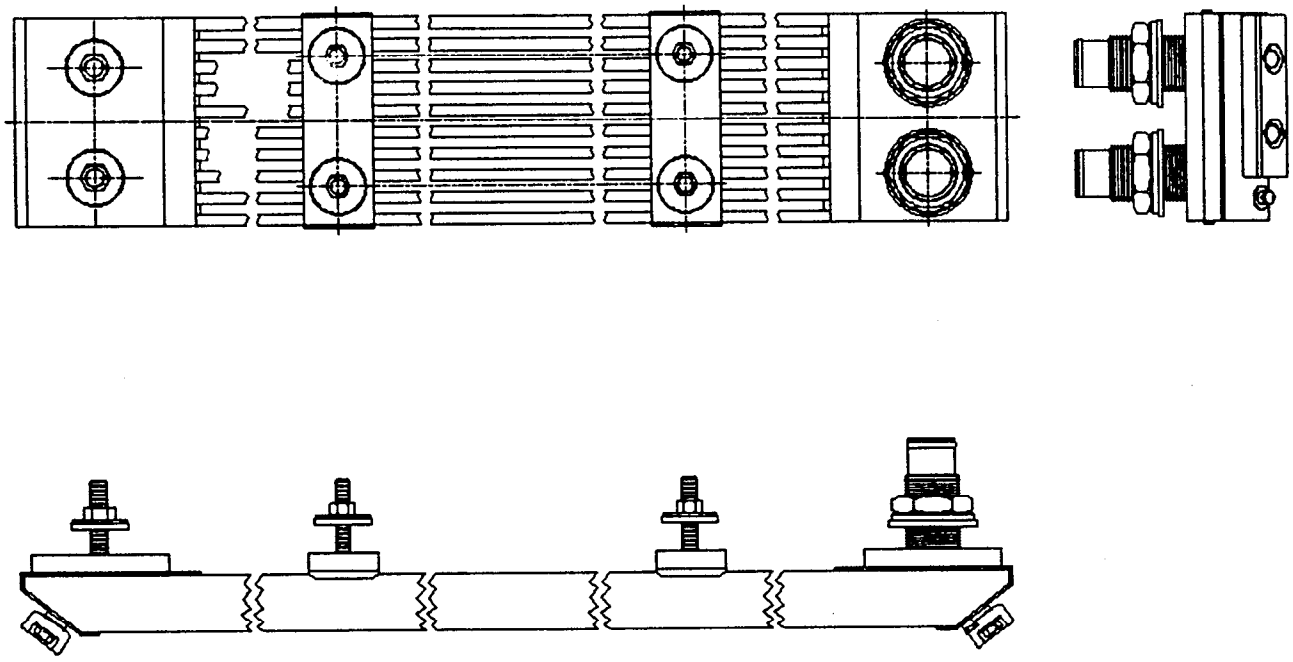

file: bk/c/mydoc/duradwgexamples041900

DuraCooler®

Flanged Unit

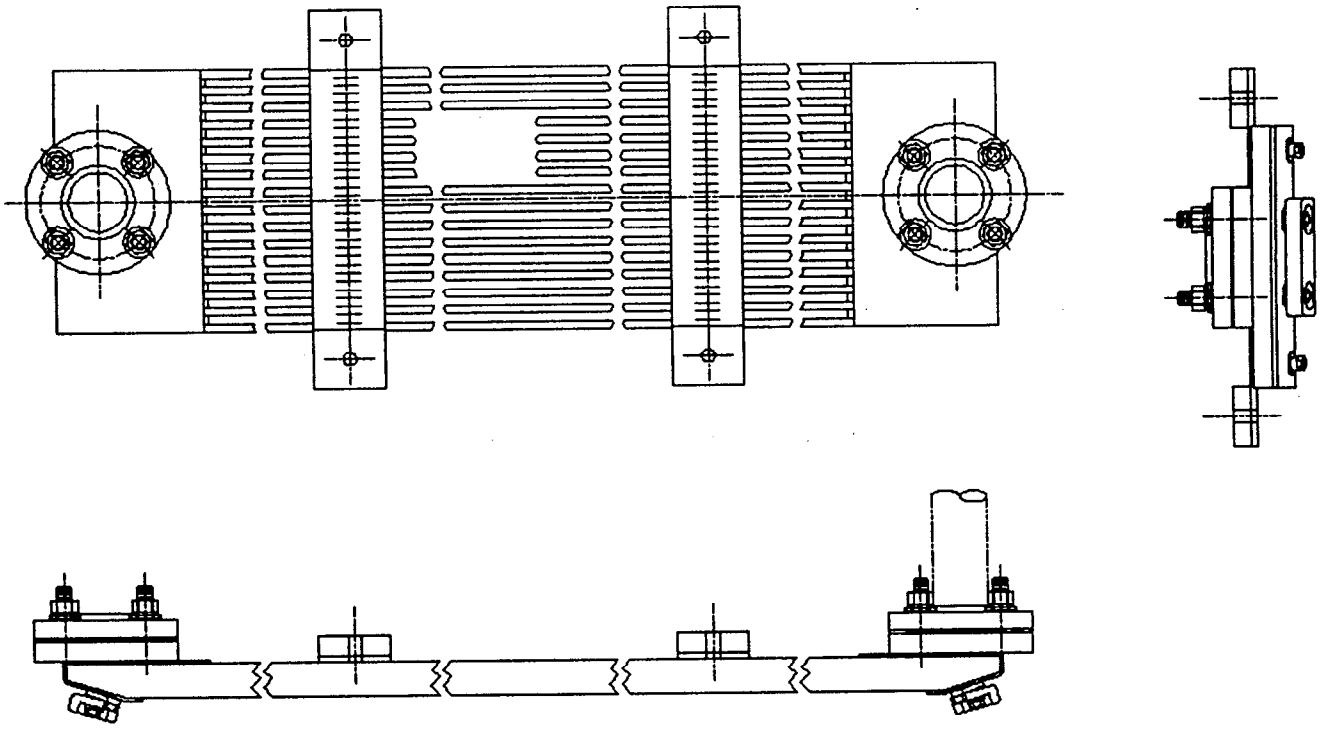

00041

file: bk/c/mydoc/duradwgexamples041900

DuraCooler®

H-Bracket Unit

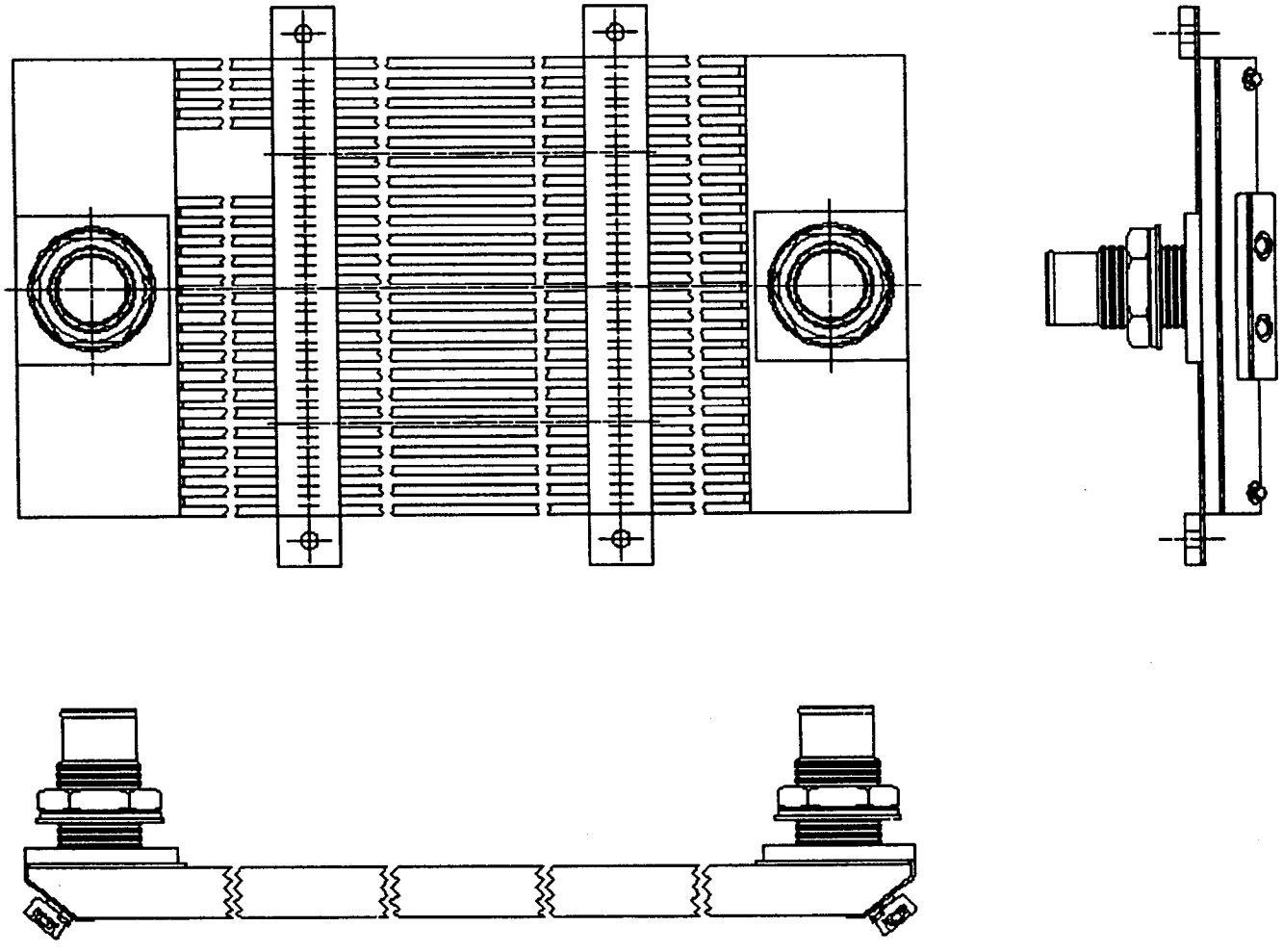

00042

file: bk/c/mydoc/duradwgexamples041900

Cooler™ by DURAMAX® MARINE LLC

DURACOOLER™ INSTALLATION MANUAL

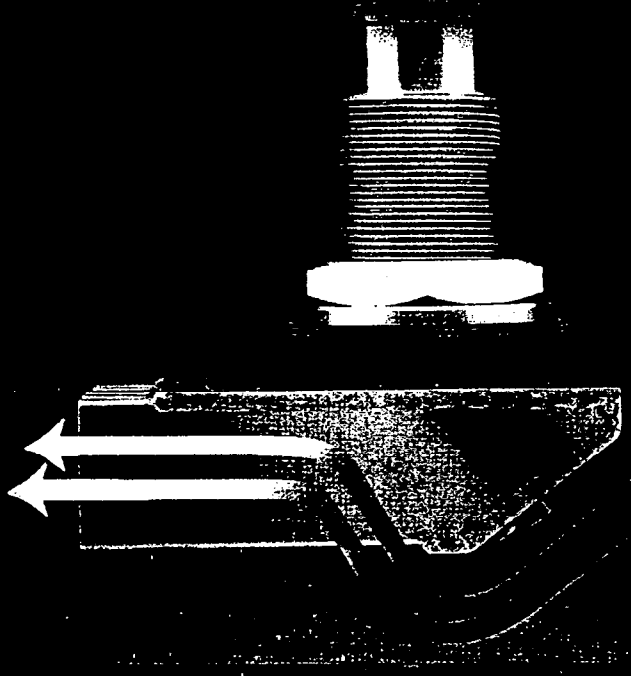

Get the edge

00043

BASIC DURACOOLER™ INSTALLATION INSTRUCTIONS

Please use these instructions as a supplement and general guideline to the full set of instructions for installation. Installation instructions in this section are based on a typical DuraCooler™ installation and may not be the only acceptable method of installation. Please read the complete DuraCooler™ Installation Instructions for a complete set of instructions.

Typical Installation

1. Select appropriate hull location for the DuraCooler.™ Refer to DuraCooler™ Installation Planning section for further details on this step.
2. Consult with local A.B.S., Coast Guard or other approval agency representatives to see if a sea chest (cofferdam) installation is required.
3. If a sea chest is used, make sure there is adequate clearance inside hull for sea chest plumbing.
4. Use the DuraCooler™ or make a template to mark hole locations on the hull. Follow instructions in Details of DuraCooler™ Installation – Exterior Details.
5. Burn holes in the hull per step 4 & 5 of Details of DuraCooler™ Installation – Exterior Details.
6. Make sure the DuraCooler™ nozzles fit into the holes in the hull without contact with the hull.
7. Build sea chest inside hull according to A.B.S., Coast Guard or other approval agency regulations. A sea chest should protect internal plumbing and prevent internal flooding in the event of the DuraCooler™ being knocked off of the hull.
8. Install the DuraCooler™ to the hull using only the hardware provided with the DuraCooler™ by Duramax® Marine and a polysulfide sealant such as BoatLIFE® Caulk.
9. The square or rectangular rubber gasket should be positioned between the DuraCooler™ and the exterior of the hull. The circular reinforced rubber gasket should be installed between the nozzle nut and the inside of the hull.
10. Tighten the nozzle nuts securely per the recommended torque values in the installation manual.
11. Close sea chest.
12. Install internal plumbing per the instructions in the Details of DuraCooler™ Installation – Interior Details Section.
13. Fill the system with water and/or water/glycol mixture. Bleed air from the system before replacing upper drain plug.
14. Pressure test the water-filled system to 30 psi (2.04 bar). **Do not exceed 30 psi.**
15. Build suitable protection around the DuraCooler™ per the instructions in the DuraCooler™ Installation Planning – Surface-Mounted DuraCoolers™ Section.

The recommended torques are:

	THREAD SIZE INCHES	TORQUE RANGE
Nozzle Nuts		**50 - 60 foot lbs.**
		70 - 100 foot lbs.
		125 - 150 foot lbs.
		200 - 250 foot lbs.
Header Stud Nuts	$^5/_8$" - $^3/_4$"	**30 - 40 foot lbs.**
	1"	**50 - 60 foot lbs.**
Support Bracket Stud Nuts		**20 - 25 foot lbs.**

00044

DURACOOLER™ INSTALLATION PLANNING

All DuraCoolers™

1. Specifications for cooling capacity are based on ambient water (seawater) flow along the entire length of the DuraCooler.™ Installation where the DuraCooler™ tubes are perpendicular to the water flow may cause overheating.
2. Avoid mounting the DuraCooler™ where flex or severe vibration could be a problem, as this could cause damage to the DuraCooler.™
3. Efficient keel cooling depends on the continuous water flow over the DuraCooler,™ which can be enhanced by mounting the DuraCooler™ near the propeller. Since air is an insulator, aerated ambient water will diminish cooling capacity. Mounting the DuraCooler™ ahead or forward of the propeller and sufficiently below the water line will help avoid aerated ambient water. *(see illustration A)*

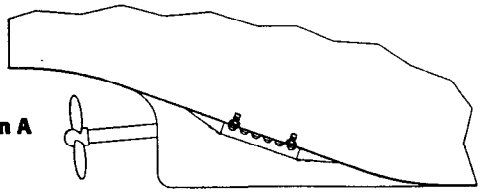

Illustration A

4. Free circulation of ambient water over the DuraCooler™ tubes is essential for proper operation. When operation occurs at zero knots, heat from the DuraCooler™ is carried away via convection currents.
5. Classification agencies may require a sea chest for certain installations. If a sea chest is required, side piping should be designed into the system for ease of installation and maintenance. *(see illustration B)*

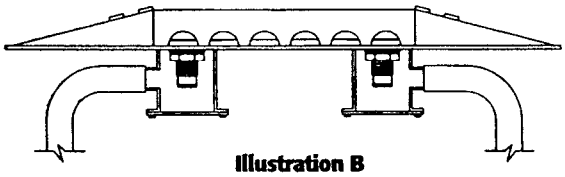

Illustration B

6. Locate the DuraCooler™ away from any hot water discharges to provide the coolest possible environment for the unit.

DuraCoolers™ Multiple Units

1. Do not artificially raise ambient water temperature surrounding the DuraCooler.™ Since DuraCoolers™ can be used to cool multiple circuits (such as jacket water and aftercooler water), there can be a DuraCooler™ located in the close proximity to another DuraCooler™ with a different operating temperature. Always locate the DuraCooler™ with the lower operating temperature forward or lower relevant to the water line of the other units or separated with a separator plate and mounted side by side and closer to the keel.

Recessed DuraCoolers™

1. Although mounting the DuraCooler™ on the hull surface provides better heat transfer efficiency, all planing hulls and vessels operating at speeds equal to or greater than 12 knots require recessed mounting. Recessing the DuraCooler™ into the hull and covering it with bar grating provides protection to the unit from flotsam and mechanical damage from pounding seas. There should be at least 1.50 inches (38 mm) of clearance on all sides of the recessed DuraCooler™ and the recess should be no deeper than .500 inches more than the cooler thickness. The recess should be constructed so that the ends and top side are flared out from the unit on a 45-degree angle to aid flow toward the DuraCooler™. This will allow heated water to escape. *(see illustration C.1 & C.2)*

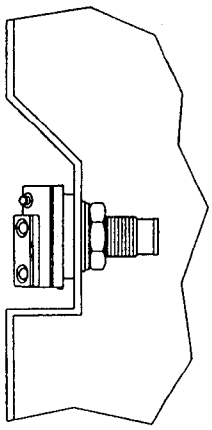

Illustration C.1

Illustration C.2

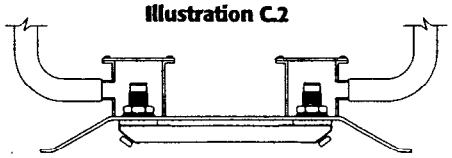

2. For zero knot applications, do not recess the DuraCooler™ on the bottom of a vessel unless the mounting surface inclines a minimum of 20° from forward to aft. Any protective shrouding around the DuraCooler™ must be constructed to allow for free flow of convection currents and other flows. *(see illustration A)*

Surface-Mounted DuraCoolers™

1. If the DuraCooler™ is to be surface-mounted, it should be properly protected using fairing blocks, side plates and a protective grill over the cooler. Fairing blocks can be constructed of bar grating or solid plates with suitable spacing. *(see illustration E)*

Illustration E

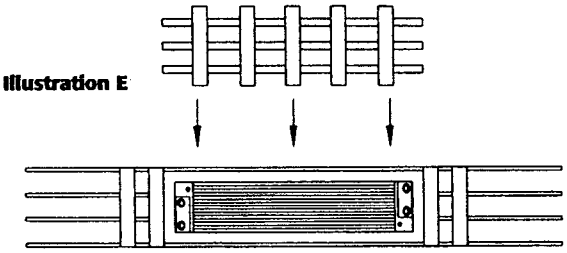

2. Fairing blocks should be constructed with a 4 to 1 slope. Holes should be cut in the fairing blocks to promote proper water flow across the DuraCooler.™ Any protective bar grating or grill should never block more than 25% of the area across the opening around the DuraCooler.™ Doing so could reduce cooling efficiency and cause overheating. *(see illustration F)*

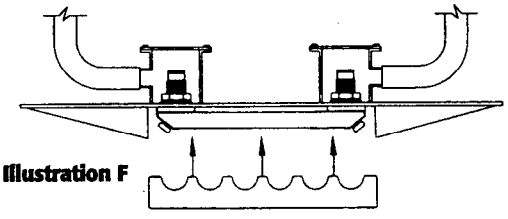

Illustration F

00045

Details of DuraCooler™ Installation

Exterior Details

1. Never pressure test or operate the DuraCoolers™ at pressures in excess of 30 psi (2.1kg/cm 2) gauge.
2. The mounting gaskets supplied by Duramax® Marine with every DuraCooler™ are required to provide the proper spacing between the DuraCooler™ and the hull.
3. All DuraCoolers™ are supplied with zinc anodes. Zinc anodes minimize the galvanic corrosion of the DuraCooler™ and must be replaced during the ship's regular maintenance schedule to preserve the life of the DuraCooler.™ Stray electrical currents can cause galvanic corrosion and rapidly deteriorate the DuraCooler™ if anodes are not used. Replacement anodes complete with mounting kits can be obtained from your Duramax® Marine DuraCooler™ distributor.
4. Prior to cutting holes in the hull of the ship, measure the distance from center to center of the inlet and outlet nozzles on each end, and the distance to any support studs. Make the holes in the hull for the inlet and outlet nozzles .25 inches (6.4 mm) oversized. *(see illustration G)*
5. After cutting holes in the hull for mounting the DuraCooler,™ grind the edges of the holes smooth to allow the entire length of the DuraCooler™ gaskets to lie flat on the surface of the hull.

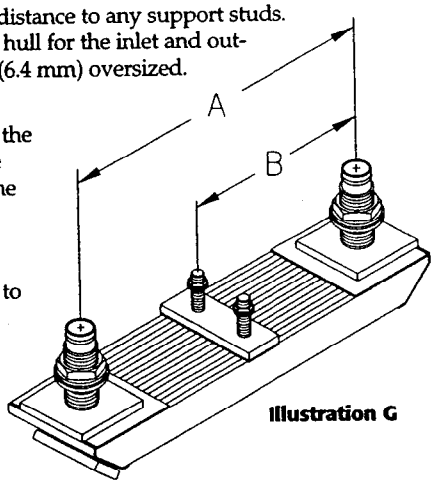

Illustration G

6. Use a polysulfide rubber sealant such as BoatLIFE® Caulk around mounting gaskets, washers, nuts on the DuraCooler™ and hull penetrations to make a water tight seal between the hull and the DuraCooler.™ After the sealant has cured, verify all torque settings on the hardware. Do not overtighten the hardware.
7. Use only the special bolts and washers provided by Duramax® Marine to attach the zinc anodes to the streamlined headers of the DuraCooler.™ *(see illustration H)*

Illustration H

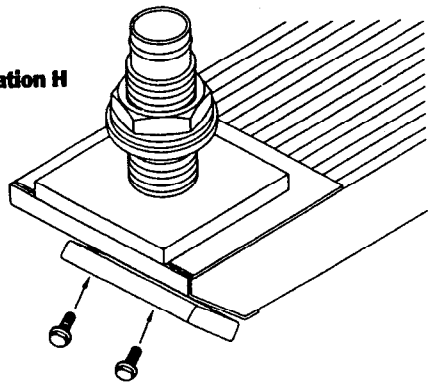

Interior Details

1. If you are retrofitting a DuraCooler™ to a system that previously used an inboard heat exchanger, the DuraCooler™ piping should bypass the heat exchanger and connect directly to the engine. Install self-venting piping between the DuraCooler™ and the engine to eliminate air pockets in the cooling system. Do not use tubing or fittings that are smaller in diameter than those on the engine or the DuraCooler.™ If the fittings on the engine are larger than the fittings on the DuraCooler,™ reduce the piping at the DuraCooler,™ not the engine. Use the fewest number of elbows to minimize pressure drop. *(see illustration I)*

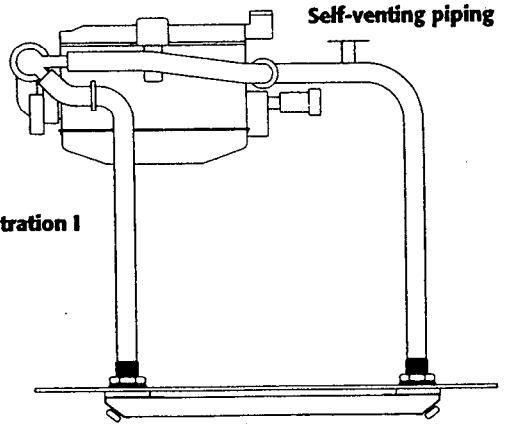

Illustration I

2. If you are connecting the engine piping directly to the DuraCooler™ nozzle, use wire-reinforced rubber hoses. The reinforcement will prevent hose collapse and interruption of water flow to the cooler. The connection hoses will help isolate the DuraCooler™ from engine vibration.
3. A bottom hull installation: Two-pass type DuraCoolers™ should be installed with the inlet and outlet at the high end relative to the water line.
4. A side hull installation: Connect the DuraCooler™ inlet hose to the lower connection tube to minimize air entrapment in the DuraCooler.™ It is important to completely fill the unit with water and pressure test prior to launching the vessel. Use the following procedure:
   - **A.** Remove the upper drain plug at the outlet end (preferably) of the DuraCooler.™
   - **B.** Fill the DuraCooler™ with coolant.
   - **C.** When coolant exits the drain opening, replace the plug.
   - **D.** Repeat this procedure to refill the DuraCooler™ every time it is drained.
5. See "Recommended Torques" chart for proper tightening on mounting hardware. Do not overtighten hardware.

00046

TROUBLESHOOTING AN OVERHEATED DURACOOLER™ KEEL COOLING SYSTEM

Contamination & Performance Interference

A. Air in System:
Was all air purged from the DuraCooler™ during installation? If a two-pass DuraCooler™ is used, was it installed with the inlet and outlet nozzles at the highest location relative to the water line?

B. Foreign Obstructions:
Verify that there is no foreign matter blocking the DuraCooler™ nozzles. Objects that fall into the inlet or outlet openings prior to or during installation could reduce water flow through the DuraCooler.™

C. Deposits:
- **Oil** - If engine problems have occurred that allowed oil to enter the cooling system, your DuraCooler™ may have an internal coating of oil. This will interfere with heat transfer and may be corrected using a radiator flush procedure.
- **Mineral** - Hard water in the coolant system can cause mineral deposits to form in your DuraCooler.™ This may be corrected by using a radiator flush procedure.

D. Marine Growth:
Marine growth on the exterior of the DuraCooler™ will interfere with heat transfer. This problem is more likely if the vessel has not been operated for several months or more. If marine growth is present on the DuraCooler,™ the cooler should be cleaned by carefully scraping, using a high-pressure water spray or sand-blasting.

E. External Coating:
Verify that the DuraCooler™ has not been painted or coated with any other material. Any coatings will act as insulation and interfere with the heat transfer.

F. Antifreeze:
Was the DuraCooler™ sized for the concentration of antifreeze (glycol) in your system? Always premix any antifreeze solutions before adding them to your system. This will avoid unmixed antifreeze in the system.

Mechanical Causes of Overheating

A. Thermostat:
Is the thermostat opening properly?

B. Connections:
- **Hoses** - Make sure that wire-reinforced hoses are being used. Verify that none of the hoses have collapsed. Collapsed hoses interfere with coolant flow.
- **Piping** - Confirm that the piping between the engine and your DuraCooler™ is at least as large as the engine and the DuraCooler™ connections. The piping should be self-venting and contain the minimum number of elbows or bends.

C. Tubes:
- **Crushed** - Crushed or pinched tubes could interfere with coolant flow. Confirm all tubes are in good condition.
- **Blown** - Excess internal pressure can cause tubes to bulge. Bulging tubes could block the flow of ambient water across the cooler. Inspect the cooler for bulged tubes.

D. Water Pump:
Verify that the water pump is operating properly.

E. Expansion Tank:
Verify that the coolant level in the expansion tank is correct.

F. Mounting Gaskets:
Verify that the Duramax® Marine supplied mounting gaskets were used when the DuraCooler™ was installed. The gaskets act as spacers to provide room for the ambient water to properly circulate around the DuraCooler.™

G. Coolant:
Verify that the coolant is circulating through the DuraCooler.™ It may be following a path of least resistance through any bypass that may exist.

Ambient Factors That May Cause Overheating

A. Moored Vessel:
If the engine overheats while the vessel is moored, and if the DuraCooler™ is located near the propeller, engage the propeller to circulate ambient water past the DuraCooler,™ but only if this can be done safely.

B. Water Aeration:
Verify that the ambient water near the DuraCooler™ is not aerated. Aerated water will not transfer heat efficiently.

00047

00048

WE'VE MOVED!!!!!!!
PLEASE MAKE NOTE:

17990 Great Lakes Parkway
Hiram, Ohio 44234
PHONE: 440.834.5400
FAX: 800.497.9283 *USA & Canada or* 440.834.4950
E-MAIL info@duramaxmarine.com WEB www.duramax-marine.com

DURAMAX® MARINE LLC

DURAMAX® MARINE

DURAMAX® MARINE FENDERING SYSTEMS

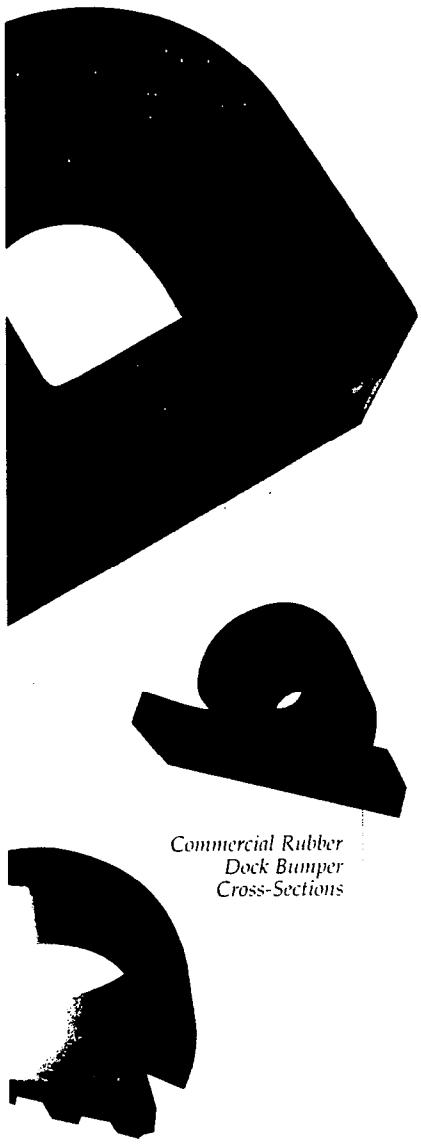

Commercial Rubber Dock Bumper Cross-Sections

To help protect vessels and dock facilities from impact damage, we've developed a variety of tough fendering products. You can count on Duramax® dock bumpers, tow knees, batterboard systems, fender pads and gaskets to withstand harsh marine environments. Choose from a variety of heavy duty sizes and materials designed to provide ultimate protection for your vessel.

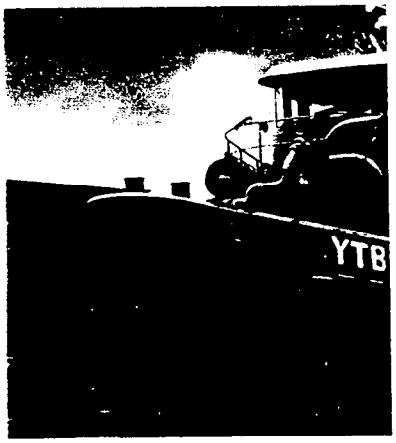

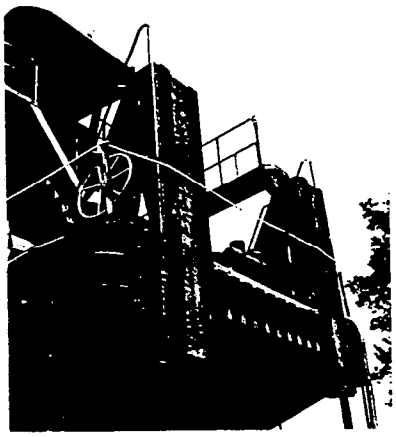

Johnson Commercial Dock Bumpers

- **EPDM rubber compound is formulated to resist weathering and ozone attack**
- **Black, non-marking grey and white EPDM compounds available**
- **Available in a variety of heavy duty extruded cross-sections and lengths**
- **Custom-designed cross-sections and special cutting and hole drilling available**

Johnson Tow Knees

- **Single, double or precurved models with several plate thickness options, for every application**
- **High quality durable natural rubber composition**
- **Securely vulcanized to steel plates**
- **Available from stock**

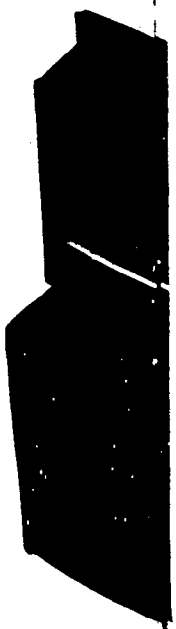

00050

DURAMAX® MARINE SEALING SYSTEMS

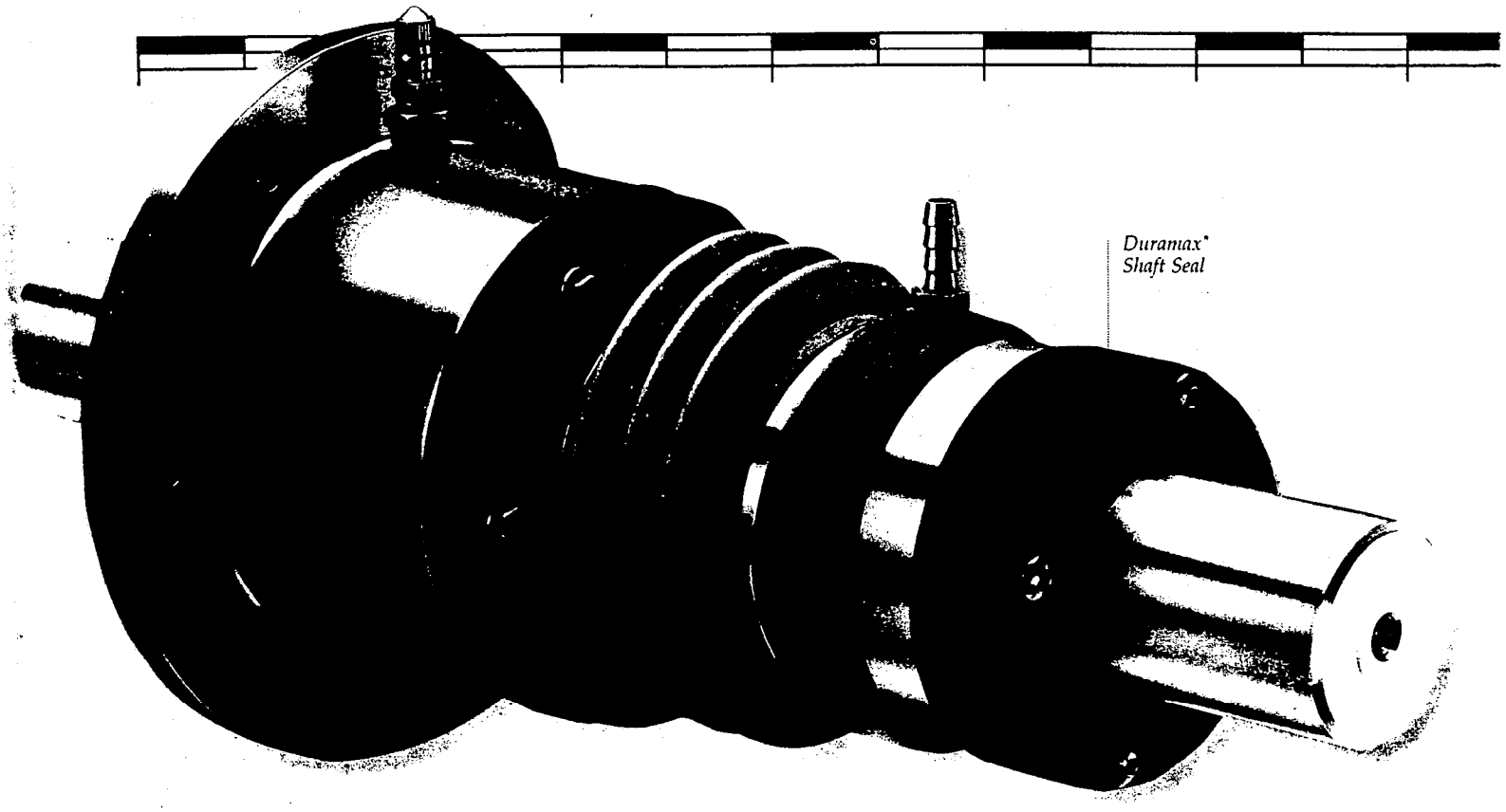

Duramax® Shaft Seal

Duramax® Marine offers an extensive choice of shaft sealing systems designed to accommodate a wide range of shaft sizes and system requirements. Whether you need traditional stuffing boxes, or our revolutionary Duramax® Shaft Seal, we offer products that keep your ship running its best.

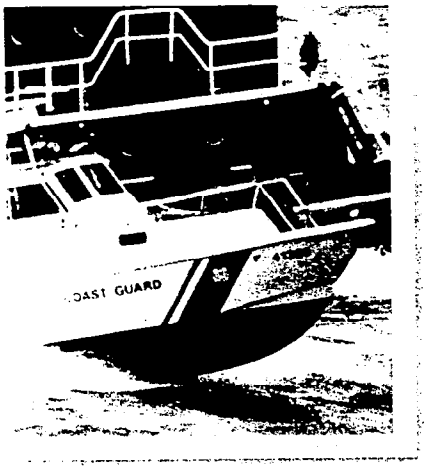

Duramax® Shaft Seal System

- **Special face seal design reduces maintenance and shaft wear**
- **Dripless seal technology reduces oily contaminated water in the bilge**
- **Specifically designed to solve problems associated with other types of shaft seals on the market**
- **Covered spring chamber provides secondary water seal for extra backup protection**
- **Available with different types of mounting adapters which simplify installation and reduce retrofit costs**
- **For propeller shaft applications**

00052

DURAMAX® MARINE COOLING SYSTEMS

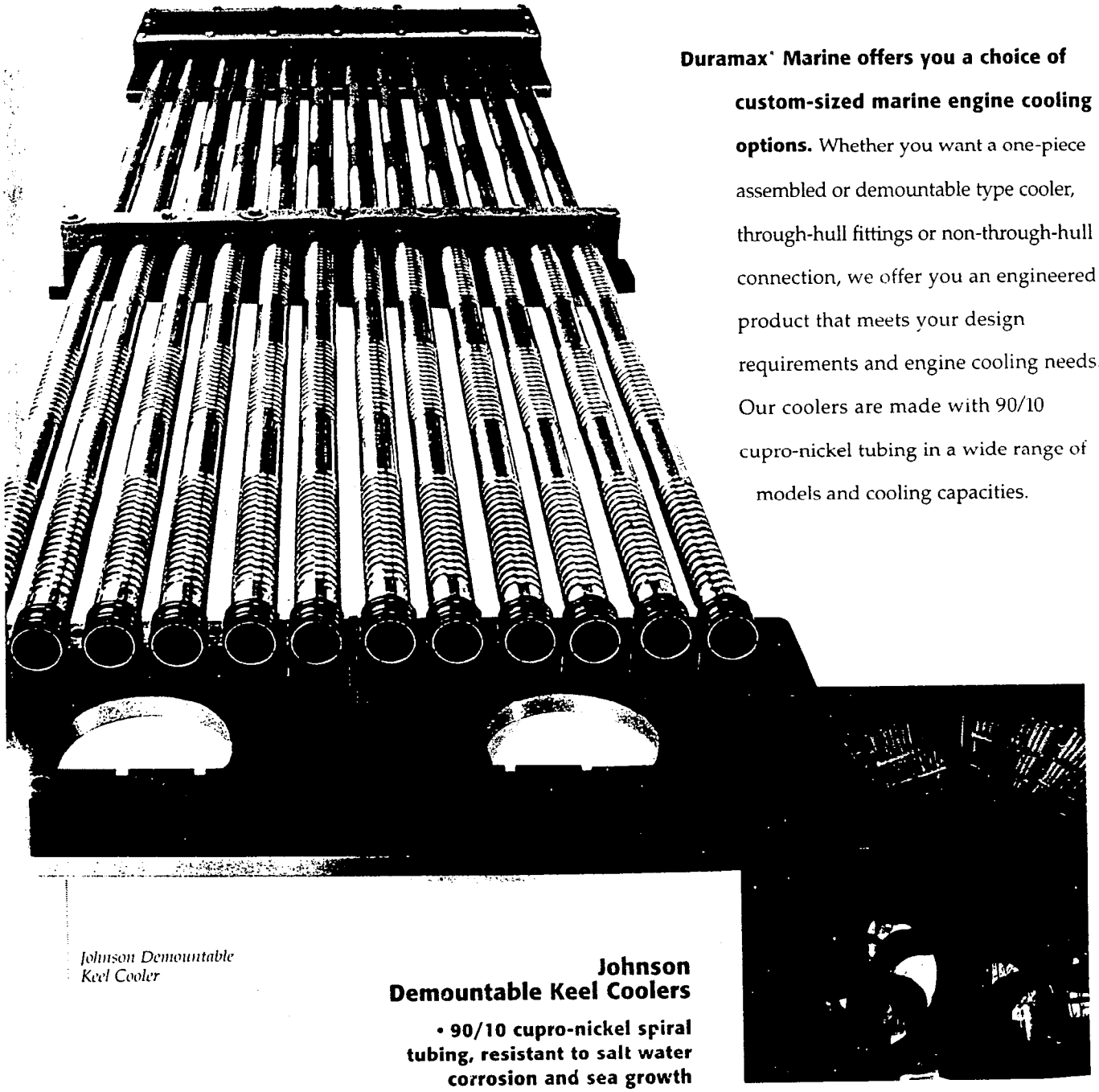

Johnson Demountable Keel Cooler

Duramax® Marine offers you a choice of custom-sized marine engine cooling options. Whether you want a one-piece assembled or demountable type cooler, through-hull fittings or non-through-hull connection, we offer you an engineered product that meets your design requirements and engine cooling needs. Our coolers are made with 90/10 cupro-nickel tubing in a wide range of models and cooling capacities.

Johnson Demountable Keel Coolers

- **90/10 cupro-nickel spiral tubing, resistant to salt water corrosion and sea growth**
- **Demountable, modular design**
- **Available in 4, 6, 8. 12 and 24 tube units**
- **Can be sized for multiple engines on one cooler**
- **No through-hull fittings**
- **Individual tubes can be replaced if damaged**
- **Custom sized to your engine specifications and operational requirements**

00054

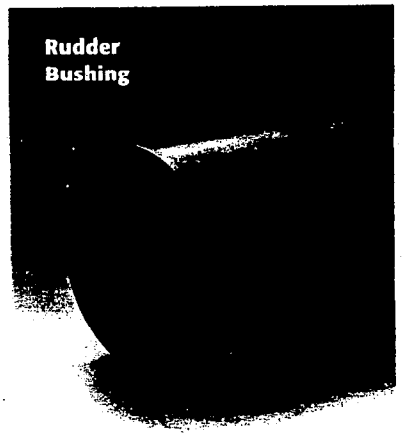

Romor® I Bearing Staves

- Specially formulated nitrile rubber bonded to Ultra High Molecular Weight Polyethylene (UHMW-PE) backing
- Special nitrile rubber bearing surface is engineered with a controlled thickness, 15 to 20 micro-inch glass-smooth finish and 80 Durometer, Shore A, hardness providing lower coefficient of friction, less break-in running time, vibration dampening, quiet operation and longer bearing and shaft life
- Special designed bearing profile provides a minimum approach angle between the bearing surface and the shaft, lowering the coefficient of friction and aiding in solid particle/grit rejection
- High impact-resistant UHMW-PE backing reduces corrosion between stave backing and bearing bushing
- Individually replaceable staves reduce maintenance costs
- Bearing lubricant (water) is non-polluting
- Meet MIL-B-17901B (SH) Class III type bearing specifications
- Fully interchangeable with brass backed Class I staves

Romor® Segmental Housings

- Centrifugally cast bronze housings are precision machined with keystone or dovetail slots
- Longitudinal water grooves between staves provide optimum water flushing and lubrication
- Available in split or solid configurations
- Custom lengths and diameters available

Duramax® "490" Rudder Bushings

- Hard nitrile rubber composition withstands rugged service conditions common to rudder steering applications
- Molded I.D. and O.D. dimensions allow ample material for finish machining at the job site
- Nitrile rubber provides high rigidity for maximum stability
- Lubricate with water, grease or oil

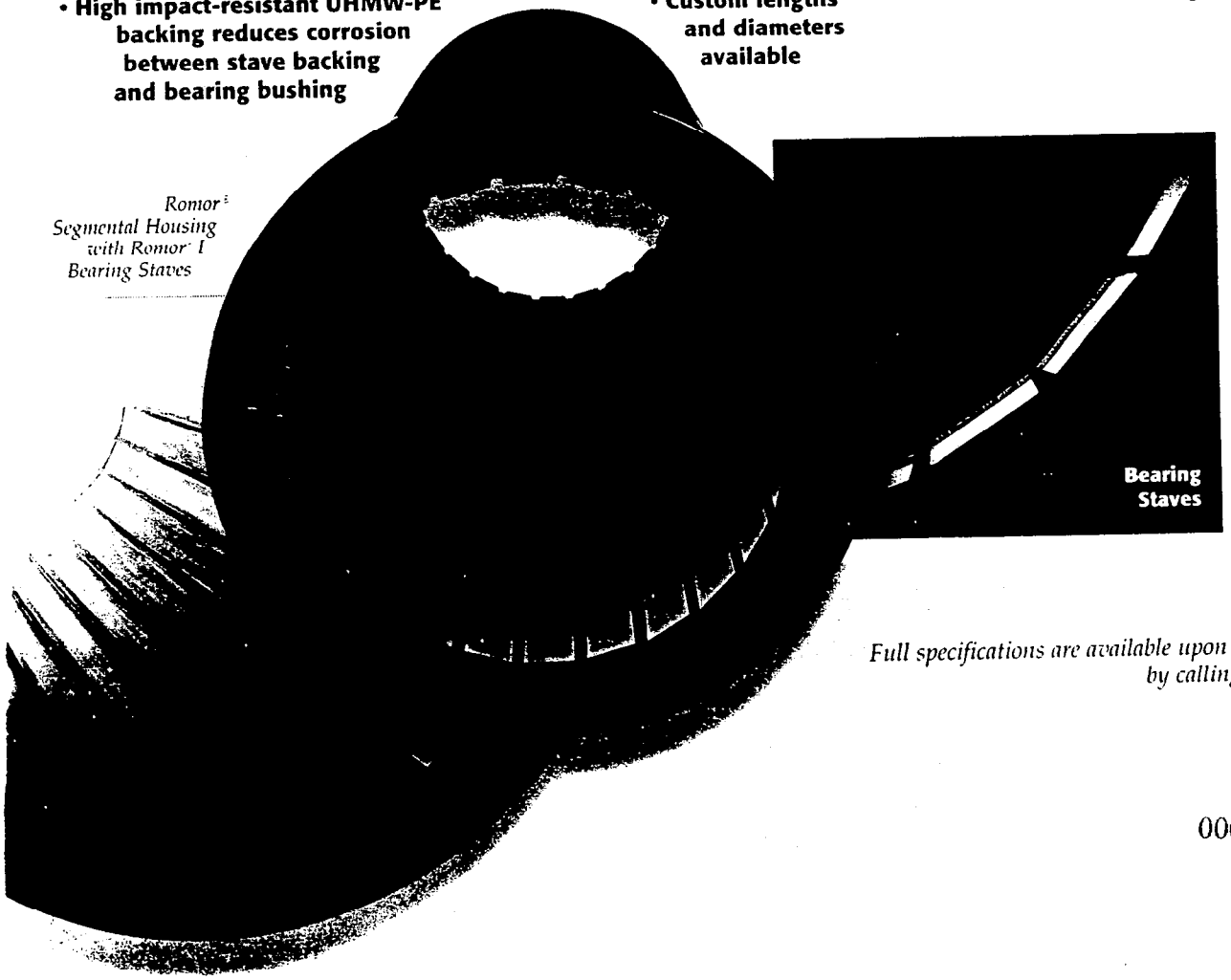

Romor® Segmental Housing with Romor® I Bearing Staves

Full specifications are available upon request by calling 1.440.632.1616.

00056

DURAMAX® MARINE BEARINGS

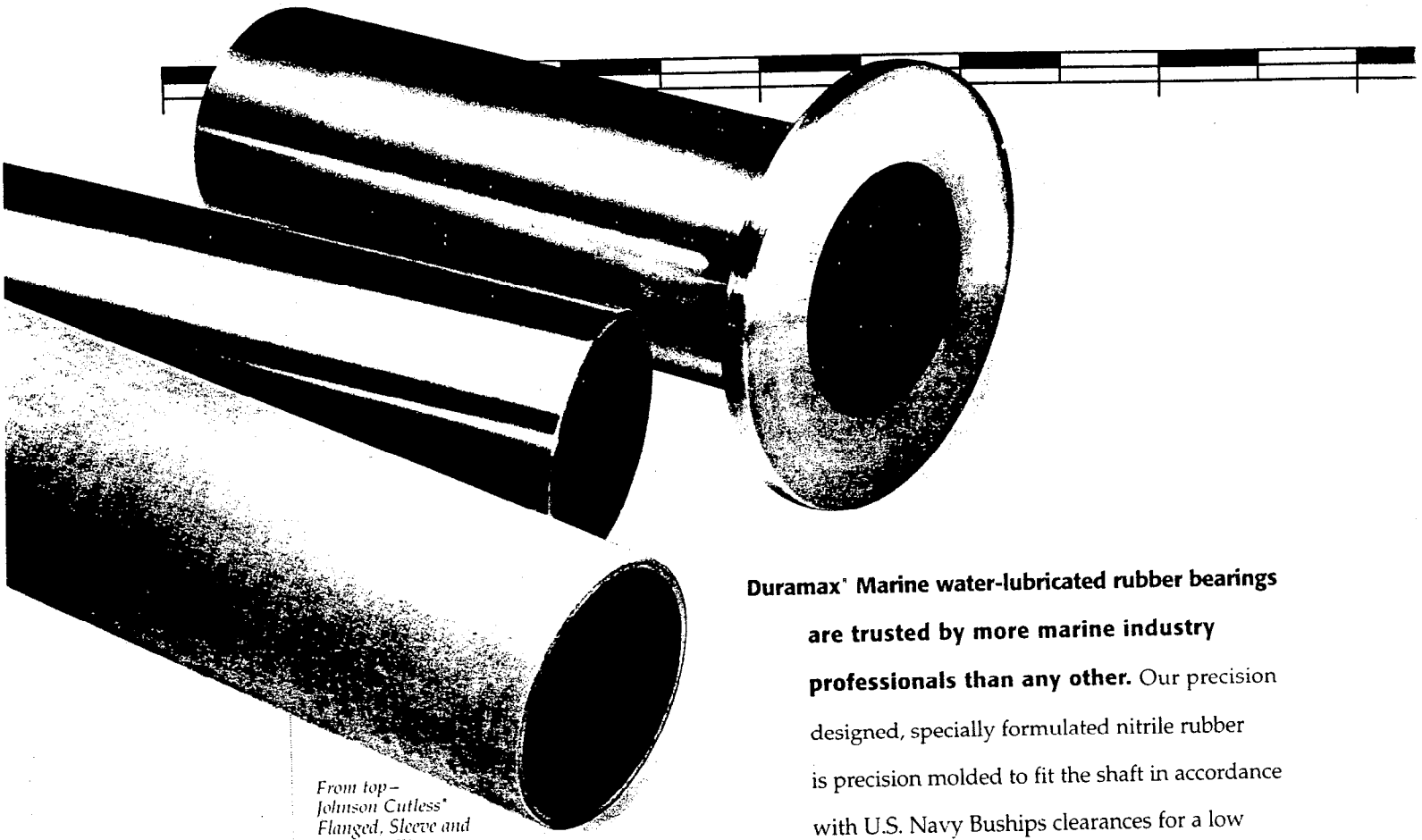

From top – Johnson Cutless® Flanged, Sleeve and Non-metallic Sleeve Bearings

Duramax® Marine water-lubricated rubber bearings are trusted by more marine industry professionals than any other. Our precision designed, specially formulated nitrile rubber is precision molded to fit the shaft in accordance with U.S. Navy Buships clearances for a low coefficient of friction. Available for marine propulsion, rudder and industrial pump applications, Duramax® bearings possess inherent vibration-dampening qualities and are non-polluting. Grit particles and other abrasives wash into the grooves and are flushed away, protecting the shaft and prolonging bearing life. Our standard bearings are readily available from stocking distributors and sales agents worldwide, or you can order custom materials and sizes to meet special applications.

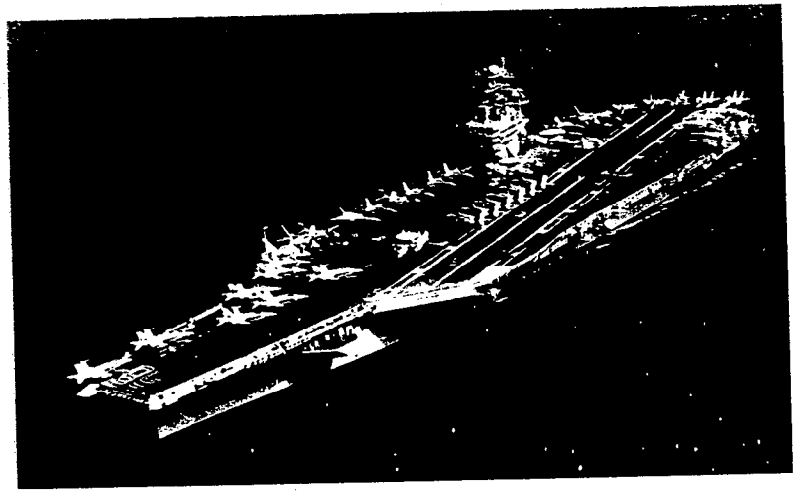

Official U.S. Navy photo.

00058

Cooling Systems
Sealing Systems
Fendering Systems
00060

Our mission is simple: to keep your business moving full speed ahead. With world-class products designed for superior performance and durability. Backed by our 100-year reputation for outstanding customer service. So when you call on us with a special request, we'll put our unique depth of experience to work—and deliver a custom solution designed to keep you doing business out on the water.

Our value-added approach means we build more than technologically advanced marine and industrial products—we build relationships with our clients—because your success is our success. That's why we've developed a network of sales representatives and customer service specialists that are the best in the business. These service professionals can answer your questions, from product compatibility to stock availability. And with our extensive worldwide network of stocking distributors and regional warehouses, delivery of standard products is immediate—so you don't waste time in dry dock.

Quick response with product and service innovations are what have made Duramax® Marine the world leader in water-lubricated rubber bearings. Whether you're an owner, shipbuilder, engineer, or technician, you are an appreciated customer. And our international sales network will be there for you when you need them with product and technical support.

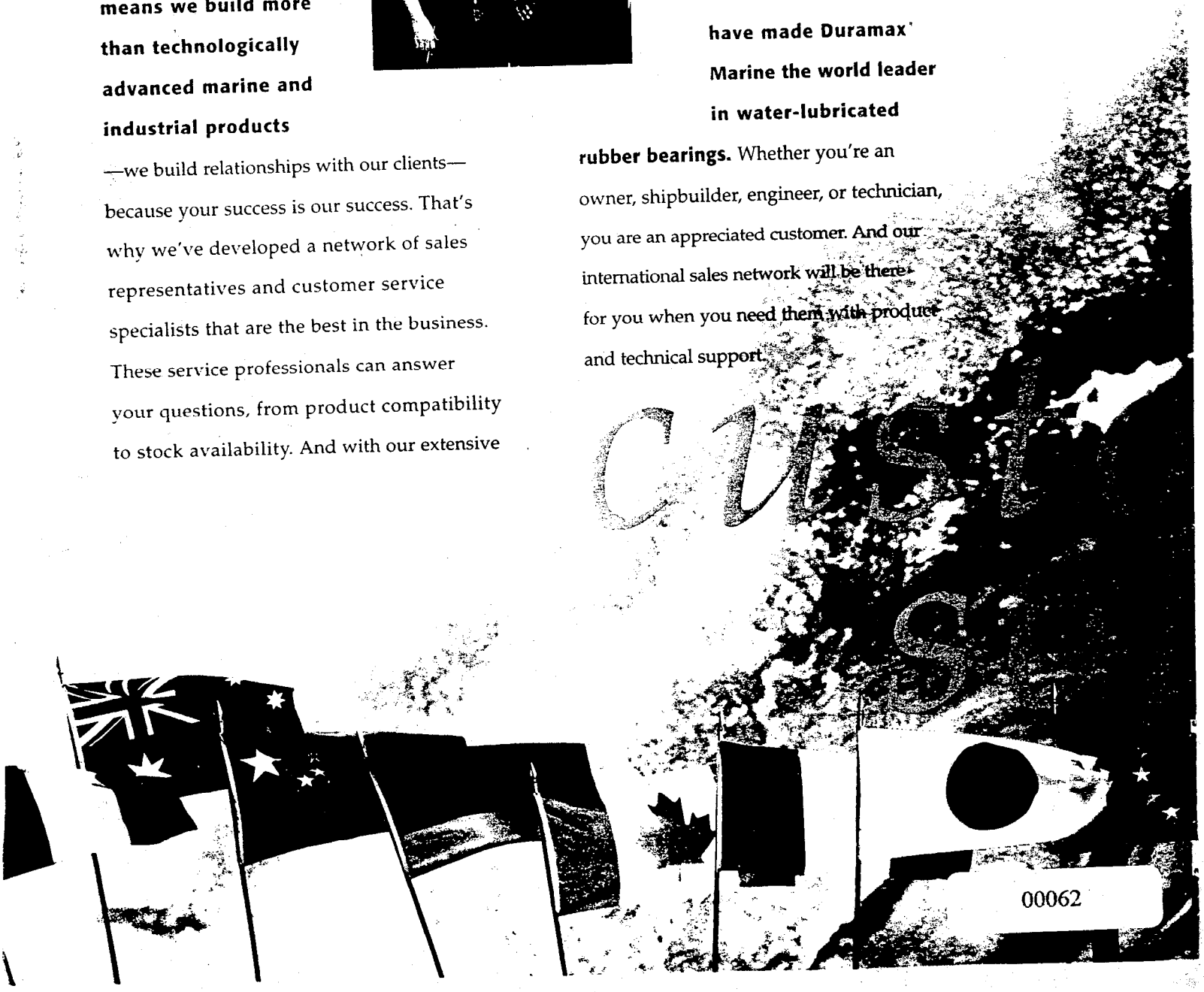

00062

00064

Sleeve and
Flanged Bearings
Attention to detail
is more than company
policy—it's a matter
of personal pride
with the people who
Demountable Stave Bearings
to Europe
re there serving
00066

When it comes to customer service, we're in deep. Our customers depend on us for more than product—they rely on our experience in the marine industry. Their ships simply can't function without propeller shaft bearings, stuffing boxes, shaft seals, keel coolers and fendering systems designed to meet exacting specifications. To us, this means we have a unique responsibility—and opportunity—to deliver when needed. So we go beyond routine customer service, providing customer focused representatives with extensive product knowledge. Even if you haven't placed an order, you'll get all the answers you need with one phone call—from one person. When you call 1.440.632.1616 the service professional on the other end of the line will take your call personally—and get results.

Quality that shows above and below the surface. Our commitment to excellence is evident in every product we manufacture. Our marine bearings, stuffing boxes, keel coolers, fenders, shaft seals and other products are known worldwide for their engineered quality and dependable performance.

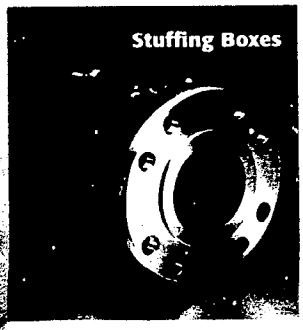

Using only high quality raw materials, we compound our own rubber and test it in our accredited lab. Through our proven, state-of-the-art production processes, we manufacture quality products you can trust, even before you put a micrometer to them. Compare our bearings to the competition and you'll appreciate the difference.

If there's a better way...we'll find it. To excel in business today you've got to be a leader. Duramax® Marine has led the industry for years, with product and service innovations that help you do business effectively. We engineer product solutions to solve your specific problems, and we do it quickly to meet your schedule and keep your ship running smoothly. Our commitment to you has also inspired service innovations, like real-time inventory and additional field warehouses. These ideas simplify ordering, reduce back orders and shorten shipping distances for faster delivery. Finally, with our in-house laboratory and testing facilities, we can ensure that your product will be of the highest quality available in the marine industry. That's commitment you can depend on.

DURAMAX M

00068

Johnson Cutless® Sleeve Bearings

- Precision machined, naval brass shell
- Features specially formulated, tough nitrile rubber
- Meet MIL-B-17901B (SH) Class II type bearing specifications
- Over 100 different sizes in stock, including inch and metric sizes
- Custom sizes available upon request

Johnson Cutless® Non-metallic Sleeve Bearings

- Non-metallic shell resists corrosion
- Features specially formulated, tough nitrile rubber
- Over 100 different sizes in stock, including inch and metric sizes
- Custom sizes available upon request

Johnson Cutless® Flanged Bearings

- Centrifugally cast naval brass shell with integral flange
- Meet MIL-B-17901B (SH) Class II type bearing specifications
- Solid and split types available
- Over 70 different sizes in stock
- Custom sizes available upon request

Johnson Cutless® Demountable Rubber Stave Bearings

- Tough, molded, nitrile rubber bearing staves
- Allow bearing change-out without shaft or propeller removal
- Choice of bearing sizes available for each bearing housing diameter
- More than 2,000 installations operating worldwide

Full specifications are available upon request by calling 1.440.632.1616.

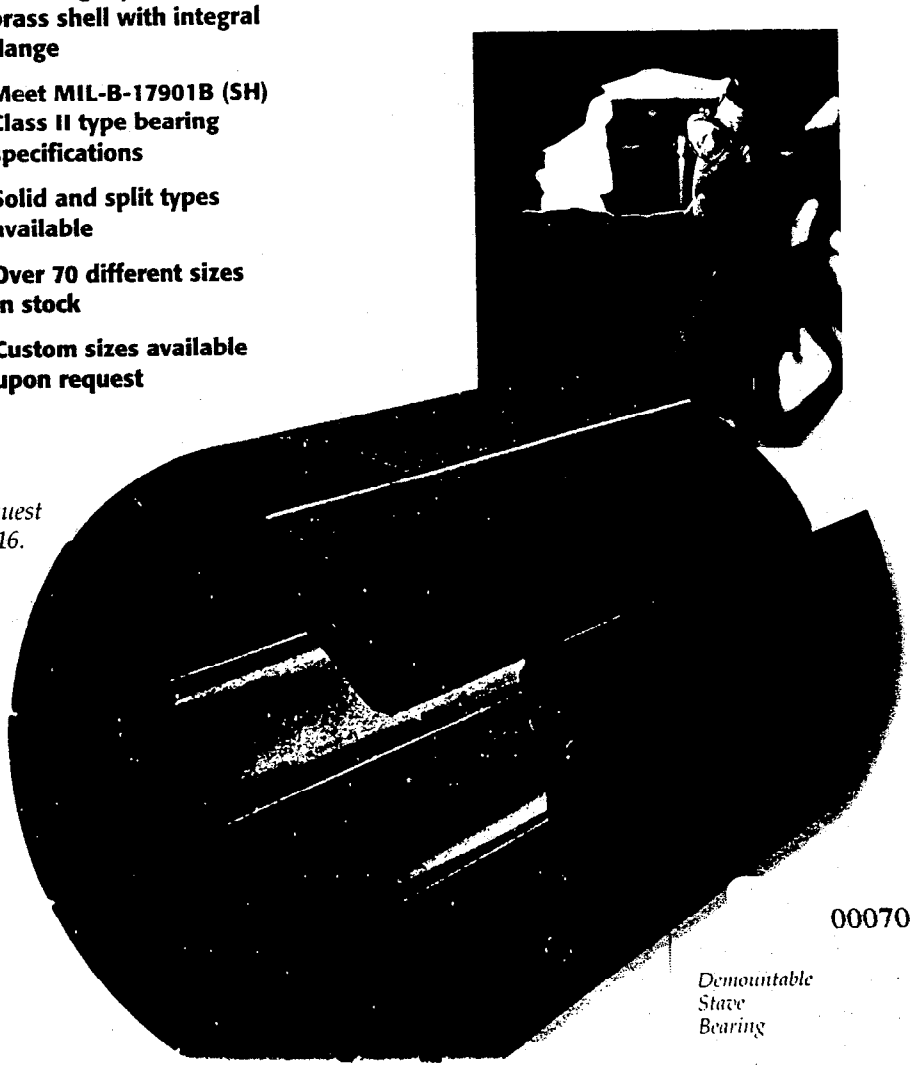

00070

Demountable Stave Bearing

industrial bearings

Duramax® Industrial Bearings

- **Ideal for pump installations where bearings are submerged or where water can be piped for lubrication**
- **Pump bearings available for centrifugal, horizontal and vertical applications**
- **Specially formulated polymers resist chemical corrosives and abrasives and absorb heavy impacts**
- **Bearing shells are available in various shell materials including: corrosion-resisting naval brass, stainless steel, aluminum, carbon steel, bronze and non-metallic**
- **Custom sizes and materials available upon request**

Naval Brass Shell/Nitrile Pump Bearing

00072

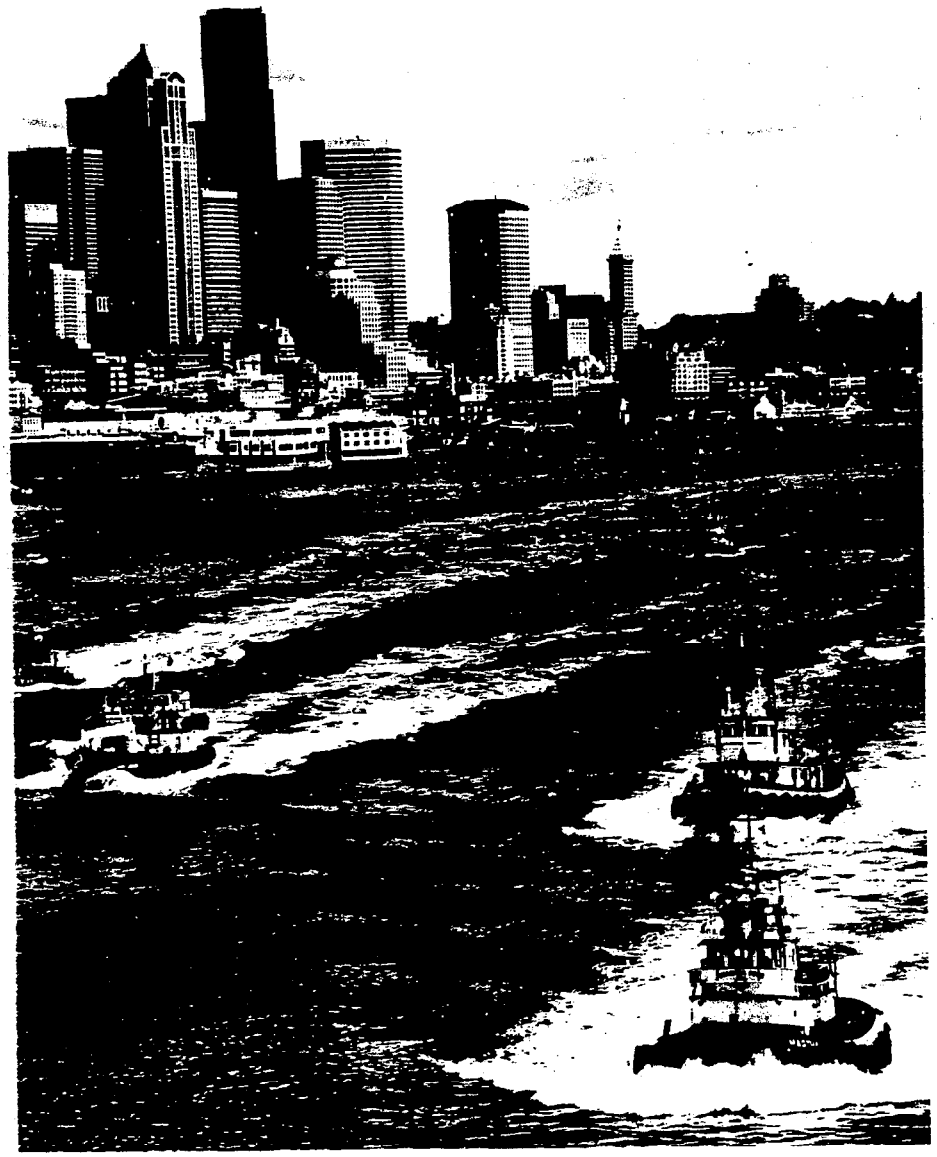

DuraCooler™

- **90/10 cupro-nickel rectangular tubing, resistant to salt water corrosion and sea growth**
- **Compact, one-piece design makes installation simple**
- **Through-hull type fittings**
- **Available in a wide range of models and different tubing sizes**
- **Custom sized to your engine specifications and operational requirements**

Full specifications are available upon request by calling 1.440.632.1616.

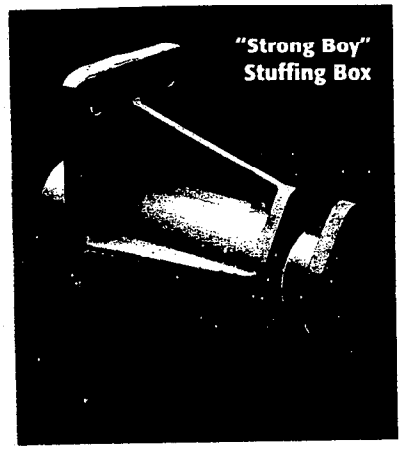

Johnson Stuffing Boxes

- Rugged construction offers dependable performance
- Water supply connection to lubricate rubber bearings
- Grease fittings and lantern ring for lubricating compression packing
- Innovative "air-seal" design allows packing change-out without dry-docking vessel
- Several models available for propeller and rudder applications
- Choose from bronze, aluminum or steel
- Air, water and grease services

Duramax® "Strong Boy" Stern Castings and Stuffing Boxes

- Bronze stern casting complete with Johnson Cutless® Sleeve Bearing manufactured in sizes from 1 inch through 6 inch shaft diameter
- Available with oval or rectangular base
- Designed to minimize overhang and distance between stern post and propeller
- Special ribbed design provides additional strength to support heavy propeller end loads
- Complete with water scoops for lubricating Johnson Cutless® Bearing
- Bronze "Strong Boy" stuffing boxes with rectangular mounting flange are available for shaft sizes of 4 inch to 6 inch diameter
- Available with compression packing, grease lantern ring and zerk fitting and ⅓ length Johnson Cutless® Sleeve Bearing

Johnson "Air-Seal" Stuffing Box

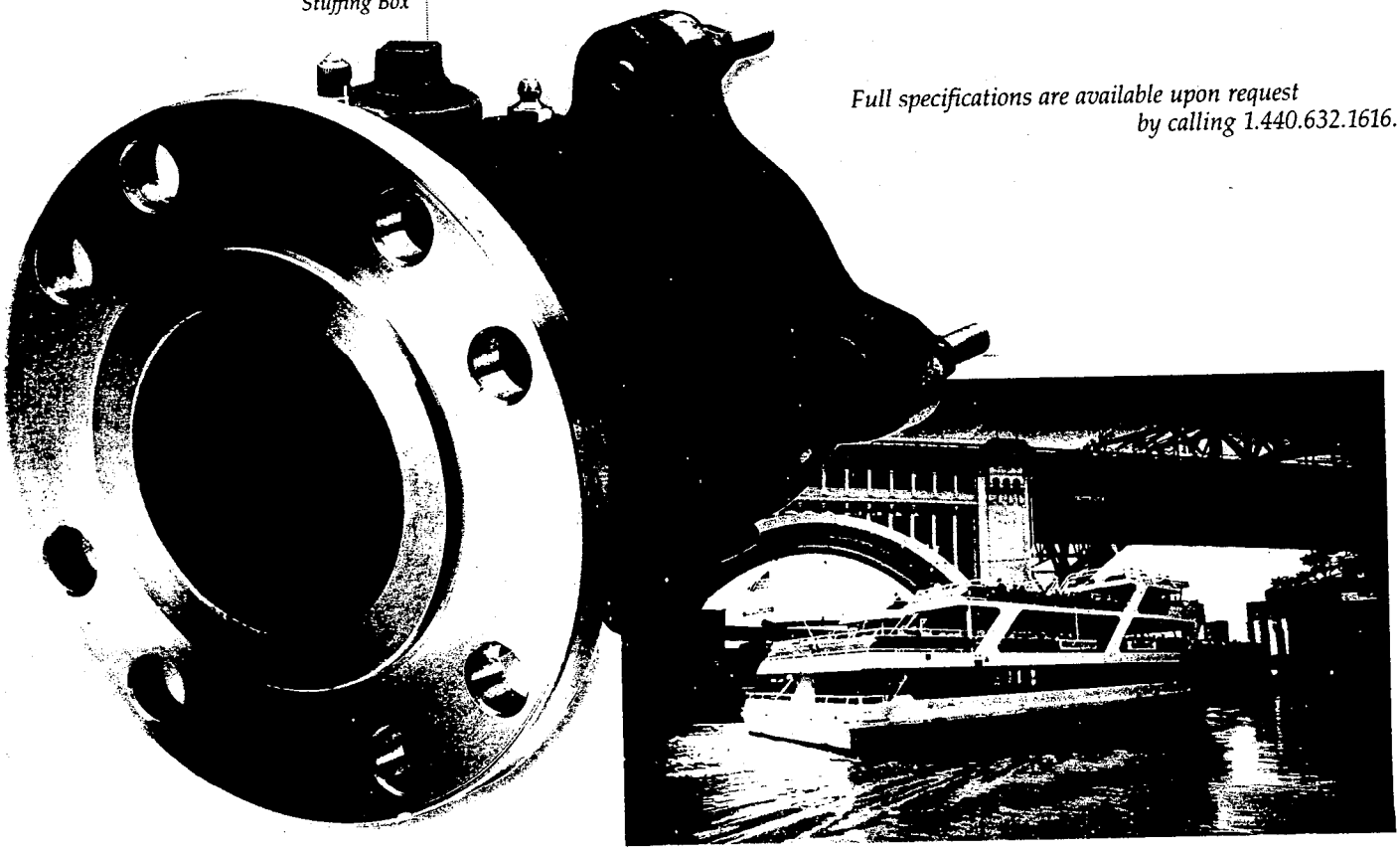

Full specifications are available upon request by calling 1.440.632.1616.

LINERITE® & LINERITE® II Composite Batterboard Systems

- **LINERITE® three layer engineered composite has two layers of Ultra High Molecular Weight Polyethylene (UHMW-PE) separated by one layer of elastomer**
- **LINERITE® II combines one layer of UHMW-PE and one layer of elastomer**
- **Special composite layer design provides a smooth abrasion-resistant surface that reduces friction during ship berthing operations and exceptional high-impact energy absorption with low deformation under docking load**
- **Features a special recessed stud fastener design that reduces bolt stress and fatigue**

(LINERITE® AND LINERITE® II are registered trademarks of the BF Goodrich Company)

Both systems:

- **Are non-absorbent, non-polluting and unaffected by most chemicals, marine organisms and freezing temperatures**
- **Are lightweight and easy to install**
- **Eliminate the problems of chemical leaching, rot and splintering associated with treated wood timbers**
- **Custom engineered for applications that include wharf, pier and dock fendering; dry dock pads; offshore pump station and pipeline fenders; floating docks; pilings and wing walls**

Johnson Weatherstrip Door Gaskets, Window Channel and Hatch Cover Gaskets

- **Hatch cover, doorframe gaskets and window channel for every application**
- **Designed for long lasting, durable sealing under the toughest marine environments**
- **Available in a variety of cross-sections and durometers**

From top – Single and Double Tow Knees

From top – Segmented and Precurved Tow Knees

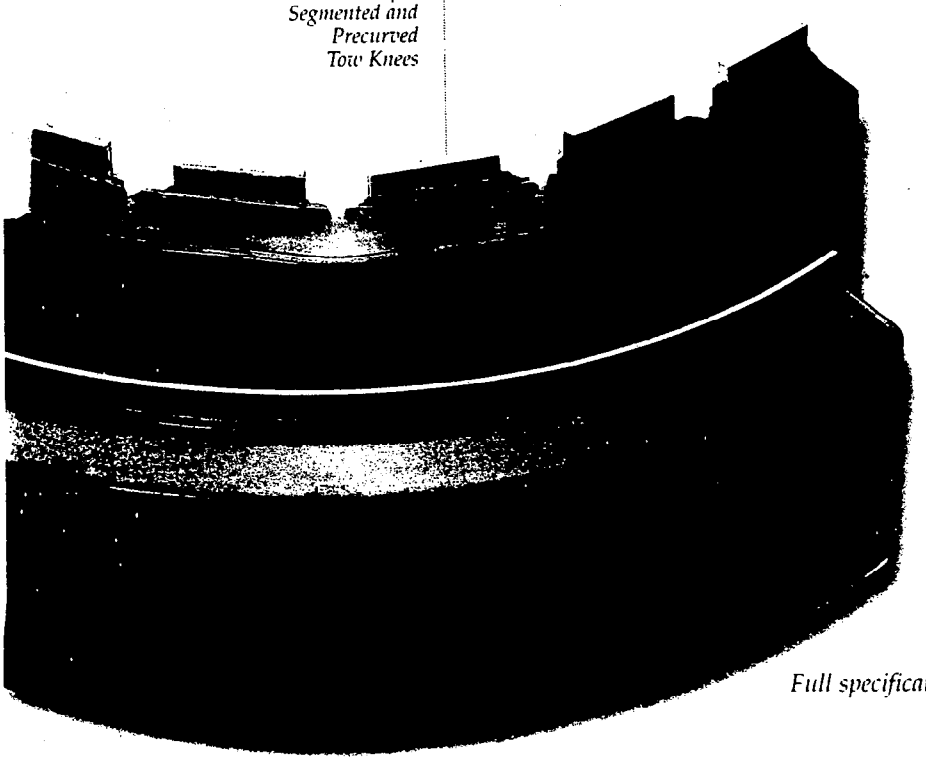

00078

Full specifications are available upon request by calling 1-440-632-1616.

MARCO Shipyard keeps its cool, delivers before expensive deadline

February 2001, Seattle, Washington - A few weeks before scheduled delivery of the first of two new pilot boats for the San Francisco Bar Pilots, Marco Shipyard Seattle managers were anticipating a smooth, on-time delivery. The contractual penalty for late delivery was the last thing on their minds.

But everything changed during the vessel's first sea trial.
"At that late date we realized that the keel coolers that we specified and purchased were not adequate to cool the diesel generators. After we had already purchased the generator sets and the keel coolers, the diesel engines' specifications, including heat rejection, were changed by their manufacturer," says Bob McMahon, Shipyard Vice President and General Manager at Marco Seattle.

McMahon contacted Duramax® Marine LLC, the manufacturer of the new DuraCooler® keel coolers used on the pilot boats. "This was the first time we had ever used the DuraCoolers® and we weren't sure if the people at Duramax® Marine would be able to fix our problem in time," adds McMahon.

Days later Marco had new keel coolers with special, extra-long nozzles to give the coolers more stand-off from the hull and extra tubes for more cooling capacity. According to McMahon, "Duramax® worked hard to accommodate our situation. They were able to fit the new coolers in the same footprint and get them to us much more quickly than any of us thought possible, allowing us to deliver on schedule. The people at Duramax® saved the day."

According to Duramax® Marine representative, Lew Foster, Duramax® was able to confidently recommend a fix because of the company's ongoing, full-scale testing program. "Before our testing, we wouldn't have known how much the additional stand-off distance would increase heat transfer. Now we know since we have tested DuraCoolers® under different stand-off distances and under various internal and external conditions. We were just glad we could figure it out and help Marco out of a serious situation.

MARCO Shipyard keeps its cool, delivers before expensive deadline

February 2001, Seattle, Washington - A few weeks before scheduled delivery of the first of two new pilot boats for the San Francisco Bar Pilots, Marco Shipyard Seattle managers were anticipating a smooth, on-time delivery. The contractual penalty for late delivery was the last thing on their minds.

But everything changed during the vessel's first sea trial.
"At that late date we realized that the keel coolers that we specified and purchased were not adequate to cool the diesel generators. After we had already purchased the generator sets and the keel coolers, the diesel engines' specifications, including heat rejection, were changed by their manufacturer," says Bob McMahon, Shipyard Vice President and General Manager at Marco Seattle.

McMahon contacted Duramax® Marine LLC, the manufacturer of the new DuraCooler® keel coolers used on the pilot boats. "This was the first time we had ever used the DuraCoolers® and we weren't sure if the people at Duramax® Marine would be able to fix our problem in time," adds McMahon.

Days later Marco had new keel coolers with special, extra-long nozzles to give the coolers more stand-off from the hull and extra tubes for more cooling capacity. According to McMahon, "Duramax® worked hard to accommodate our situation. They were able to fit the new coolers in the same footprint and get them to us much more quickly than any of us thought possible, allowing us to deliver on schedule. The people at Duramax® saved the day."

According to Duramax® Marine representative, Lew Foster, Duramax® was able to confidently recommend a fix because of the company's ongoing, full-scale testing program. "Before our testing, we wouldn't have known how much the additional stand-off distance would increase heat transfer. Now we know since we have tested DuraCoolers® under different stand-off distances and under various internal and external conditions. We were just glad we could figure it out and help Marco out of a serious situation.

PILOT

FOR IMMEDIATE RELEASE
CONTACT: BEN KINGERY 440-632-1616 Ext. 267

DURAMAX® MARINE INTRODUCES REVOLUTIONARY NEW COOLING TECHNOLOGY—DURACOOLER™.

Cleveland, Ohio—
Duramax® Marine, a leading manufacturer in the commercial marine industry, has introduced a revolutionary new keel cooler—the DuraCooler™. With an innovative streamlined header, the DuraCooler™ increases cooling efficiency for new construction and retrofit. The new design enhances internal coolant and external seawater flow, increasing heat transfer efficiency while reducing system pressure drop. For new construction, this results in smaller keel cooler requirements and a reduction in cooling system costs. And on replacement retrofits, increased cooling capacity within the same footprint provides the vessel owner an additional cooling safety factor.

Aside from new design improvements, the DuraCooler™ is improved by high-quality materials that withstand the demands of the commercial marine market. Tubes are constructed with 90/10 cupro-nickel tubing: a high-strength material with exceptional heat transfer properties that has excellent resistance to the corrosive and erosive effects of seawater. Each header is manufactured with heavy gage material for exceptional strength and durability. Plus, the two-piece header design allows for brazing seams inside and outside with premium-grade silver solder—providing maximum strength and leak resistance in a single piece structure that is easier to install. And every DuraCooler™ is pressure tested before being shipped from the factory.

Duramax® has made it easier to select the perfect DuraCooler™ for your vessel. Their computerized sizing system uses engine specification data, hull location and vessel operating conditions to ensure a more precise method of keel cooler selection. This provides the correct cooling capacity for maximum engine loads and operational efficiency, resulting in an effectively sized keel cooling system without guesswork.

For over 35 years, Duramax® Marine has been a leading manufacturer in the commercial marine industry, offering high quality, engineered product lines such as Johnson Cutless® Rubber Bearings, Duramax® Sealing Systems, Johnson Commercial Dock Bumpers and now, the new DuraCooler™. They are continuously searching for ways to improve all their products in extensive research and development facilities.
www.duramax-marine.com

###

DuraCooler®

Explanation of DuraCooler® Part Numbers

EXAMPLE: SC-210-120

SC = Streamlined Cooler
2 = Tube size
10 = Number of tubes
120 = Length of cooler from center of nozzle to center of nozzle

EXAMPLE: SC-210DP-120

SC = Streamlined Cooler
2 = Tube size
10 = Number of tubes
DP = Double Pass
120 = Length of cooler from center of nozzles to center of support studs

EXAMPLE: SC-210PF-120

SC = Streamlined Cooler
2 = Tube size
10 = Number of tubes
PF = Pipe Flanged Cooler
120 = Length of cooler from center of nozzles to center of support studs

EXAMPLE: SC-210H-120

SC = Streamlined Cooler
2 = Tube size
10 = Number of tubes
H = H-bracket mounting
120 = Length of cooler from center of nozzles to center of support studs

© 2000 D...
file: bk/u/dur...

00085

DuraCooler®

DuraCooler® Tube Sizes

- Manufactured with 90/10 cupro-nickel
- Come in three different sizes.
- Wall thickness on all three sizes is .062"

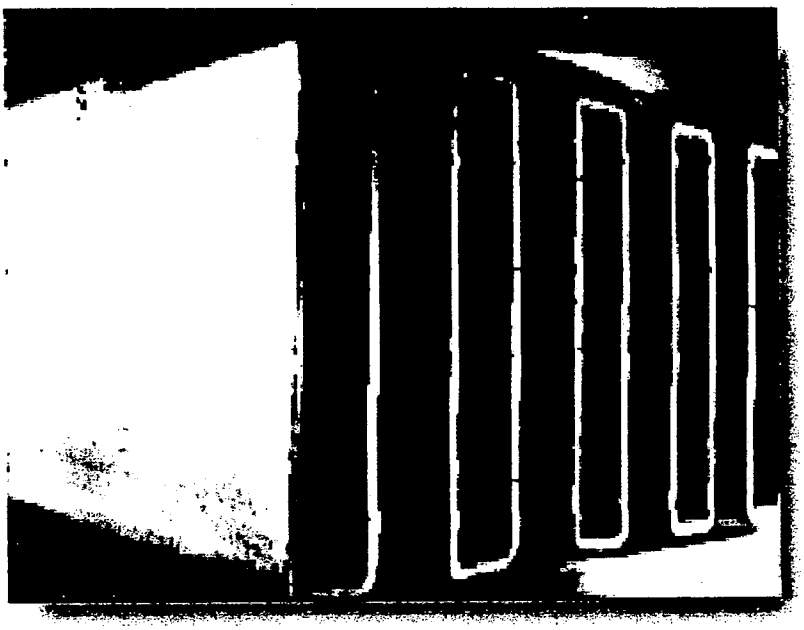

#2 Tubes: .343" wide x 1.50" high

#3 Tubes: .500" wide x 1.687" high

#4 Tubes: .500" wide x 2.50" high

© 2000 by Duramax® Marine LLC
file: bk/u/duracoolerrefhelpers050100

PATENT PENDING

DuraCooler®

by DURAMAX® MARINE

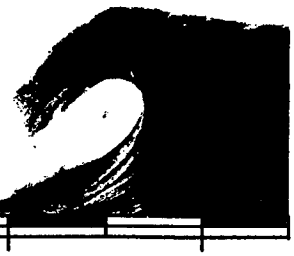

FAX FORM TO 440-834-4950

REQUIRED INFORMATION IN BOLD. ADDITIONAL INFORMATION COULD PRODUCE SMALLER COOLER.

GENERAL INFORMATION

Customer_____**Contact**
Name_____
Phone_____**Fax**_____**email**_____
Name of Vessel/Hull #_____New Construction Yes or No
Type/Use of Vessel_____Vessel Dimensions_____
Preferred Cooler ___Single Pass___Double Pass

EXTERNAL CONDITIONS

Minimum Vessel Speed at Full Power___**knots**
Maximum Ambient Sea Water Temp_____**°F**
Location of Coolers_____(bottom or side of hull)
Are there space restrictions on the hull?_____

MAIN ENGINE INFORMATION

Manufacturer_____**Model Number**_____**Quantity**_____
Model Year of Engine_____ **HP**_____**@ RPM**_____
Total Heat Rejection _____**BTU/Min** **Coolant Temp.** to Engine_____
Pump Flow Rate or Range_____**GPM** to Cooler_____
Exhaust Wet_____Dry____ **Aftercooler Circuit**___**Separate**____**Combined**
Flanged____**Nozzle**___**Inlet/Outlet**
Manufacturer of Gear_____(if gear to be cooled by DuraCooler)
If Reintjes gear, provide water pump flow_____**GPM**
System pressure drop requirements?_____

GENERATOR

Manufacturer_____**Model Number**_____**Quantity**_____
Model Year of Engine_____ **HP or KW**_____**@ RPM**_____
Flanged___**Nozzle**___**Inlet/Outlet**
System pressure drop requirements?_____ (will be sized for 0 knots unless otherwise directed)

00088

OTHER (Pump, thruster, etc.)

Manufacturer_____**Model Number**_____**Quantity**_____
Model Year of Engine_____ **HP or KW**_____**@ RPM**_____
Flanged___**Nozzle**___**Inlet/Outlet**
System pressure drop requirements?_____ (will be sized for 0 knots unless otherwise directed)

© 2001 by Duramax® Marine LLC 020101

FOR IMMEDIATE RELEASE
CONTACT: BEN KINGERY 440-632-1616 Ext. 267

DURAMAX® MARINE INTRODUCES REVOLUTIONARY NEW COOLING TECHNOLOGY—DURACOOLER™.

Cleveland, Ohio—
Duramax® Marine, a leading manufacturer in the commercial marine industry, has introduced a revolutionary new keel cooler—the DuraCooler™. With an innovative streamlined header, the DuraCooler™ increases cooling efficiency for new construction and retrofit. The new design enhances internal coolant and external seawater flow, increasing heat transfer efficiency while reducing system pressure drop. For new construction, this results in smaller keel cooler requirements and a reduction in cooling system costs. And on replacement retrofits, increased cooling capacity within the same footprint provides the vessel owner an additional cooling safety factor.

Aside from new design improvements, the DuraCooler™ is improved by high-quality materials that withstand the demands of the commercial marine market. Tubes are constructed with 90/10 cupro-nickel tubing: a high-strength material with exceptional heat transfer properties that has excellent resistance to the corrosive and erosive effects of seawater. Each header is manufactured with heavy gage material for exceptional strength and durability. Plus, the two-piece header design allows for brazing seams inside and outside with premium-grade silver solder—providing maximum strength and leak resistance in a single piece structure that is easier to install. And every DuraCooler™ is pressure tested before being shipped from the factory.

Duramax® has made it easier to select the perfect DuraCooler™ for your vessel. Their computerized sizing system uses engine specification data, hull location and vessel operating conditions to ensure a more precise method of keel cooler selection. This provides the correct cooling capacity for maximum engine loads and operational efficiency, resulting in an effectively sized keel cooling system without guesswork.

For over 35 years, Duramax® Marine has been a leading manufacturer in the commercial marine industry, offering high quality, engineered product lines such as Johnson Cutless® Rubber Bearings, Duramax® Sealing Systems, Johnson Commercial Dock Bumpers and now, the new DuraCooler™. They are continuously searching for ways to improve all their products in extensive research and development facilities.
www.duramax-marine.com

###

MARCO Shipyard keeps its cool, delivers before expensive deadline

February 2001, Seattle, Washington - A few weeks before scheduled delivery of the first of two new pilot boats for the San Francisco Bar Pilots, Marco Shipyard Seattle managers were anticipating a smooth, on-time delivery. The contractual penalty for late delivery was the last thing on their minds.

But everything changed during the vessel's first sea trial.
"At that late date we realized that the keel coolers that we specified and purchased were not adequate to cool the diesel generators. After we had already purchased the generator sets and the keel coolers, the diesel engines' specifications, including heat rejection, were changed by their manufacturer," says Bob McMahon, Shipyard Vice President and General Manager at Marco Seattle.

McMahon contacted Duramax® Marine LLC, the manufacturer of the new DuraCooler® keel coolers used on the pilot boats. "This was the first time we had ever used the DuraCoolers® and we weren't sure if the people at Duramax® Marine would be able to fix our problem in time," adds McMahon.

Days later Marco had new keel coolers with special, extra-long nozzles to give the coolers more stand-off from the hull and extra tubes for more cooling capacity. According to McMahon, "Duramax® worked hard to accommodate our situation. They were able to fit the new coolers in the same footprint and get them to us much more quickly than any of us thought possible, allowing us to deliver on schedule. The people at Duramax® saved the day."

According to Duramax® Marine representative, Lew Foster, Duramax® was able to confidently recommend a fix because of the company's ongoing, full-scale testing program. "Before our testing, we wouldn't have known how much the additional stand-off distance would increase heat transfer. Now we know since we have tested DuraCoolers® under different stand-off distances and under various internal and external conditions. We were just glad we could figure it out and help Marco out of a serious situation.

DuraCooler®

Photos courtesy of Morse Controls (NZ) Ltd. and Northport Engineering Limited.

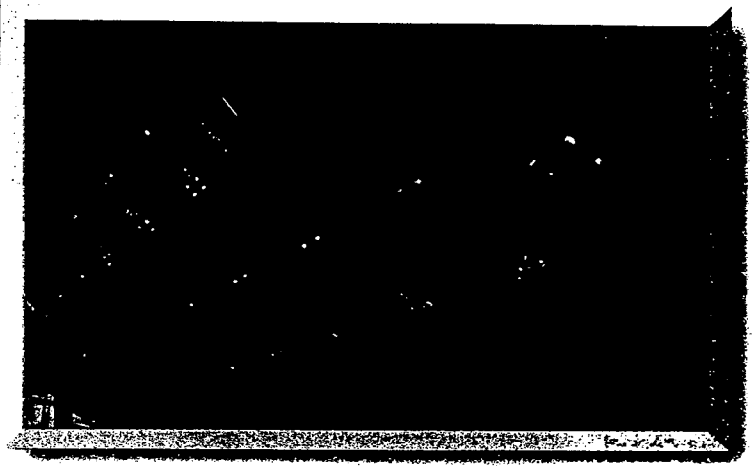

DuraCooler®

- **90/10 cupro-nickel tubing is resistant to waterflow erosion and serves as an antifoulant**
- **Compact, one-piece design makes installation simple**

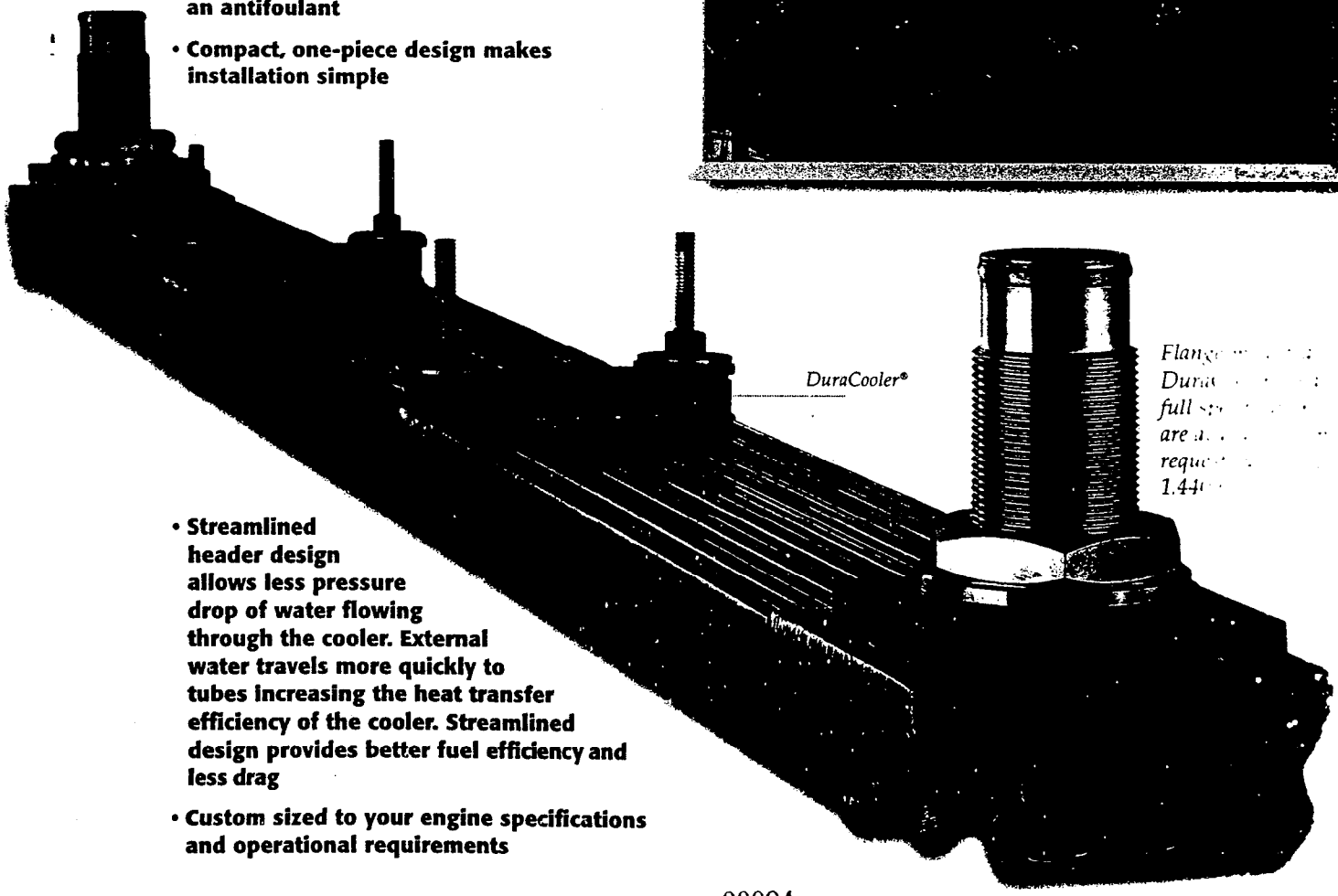

Flang
Dura
full
are
requ
1.44

- **Streamlined header design allows less pressure drop of water flowing through the cooler. External water travels more quickly to tubes increasing the heat transfer efficiency of the cooler. Streamlined design provides better fuel efficiency and less drag**
- **Custom sized to your engine specifications and operational requirements**

00094

DuraCooler™

Success of the Rectangular Tube Cooler

- In 1946, the first rectangular tube keel cooler came to the marine market.
- For nearly half a century, this design has enjoyed considerable success in the marine industry for keel cooling of heat sources on marine vessels.
- This type of cooler has been successful in the marine industry for three reasons:
  1. Large amounts of tubing surface area in a relatively **small, compact footprint**. This equates to a highly efficient heat exchange device, which is a smaller target to be damaged by underwater debris.
  2. **Durability of design**: In many applications, the design has stood up to more than twenty years of continuous use in severe marine environments.
  3. **Ease of installation**: Shipyard workers appreciate the ease of installation of the one piece keel cooler.

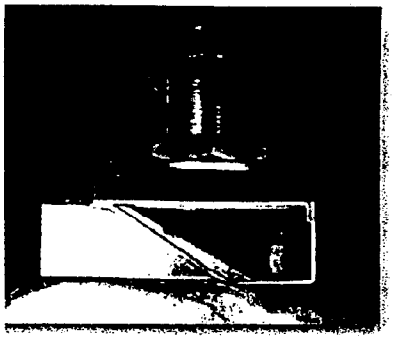

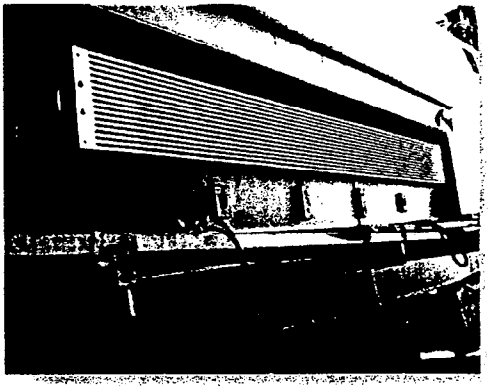

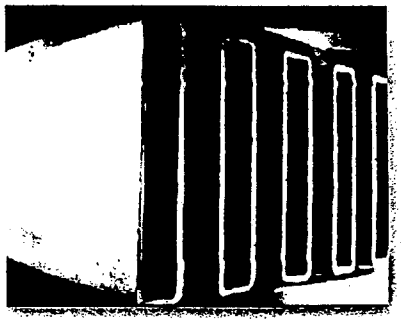

Why is the heat transfer so poor for the outer tubes?

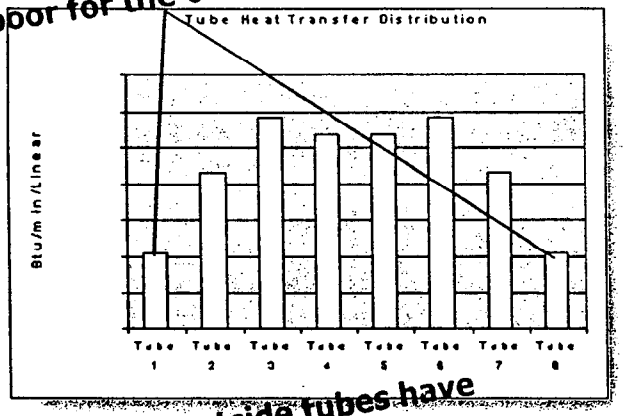

Why do the outside tubes have the lowest flow rates?

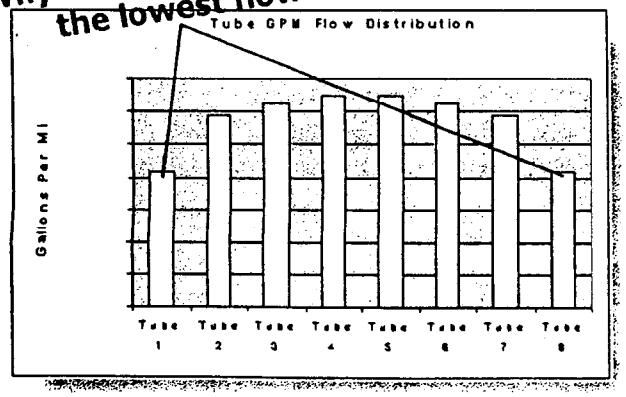

Consumers Request Improvements

- In 1997, Duramax® Marine LLC initiated a **research and development program** to identify opportunities to improve the operational efficiency of the square-headed outboard keel cooler.
- **Finite element computer** studies were conducted to determine internal and external flow patterns, pressure drop and heat transfer characteristics for different heat exchange geometries.
- Flow pattern studies determined that the outside tubes, tubes number 1 and number 8, **(the outside tubes) in the square-headed, traditional keel cooler were being used inefficiently** despite the fact these tubes have the greatest potential heat rejection per linear foot.
- The design of the existing square header is the reason for this inefficiency.
- Duramax® Marine LLC immediately **began to develop a more efficient header design.**

00095

© 2000 by Duramax® Marine LLC file: pm/bk/c/mydoc/duracoolersalestool041700

DuraCooler™

Commitment to Design Improvements

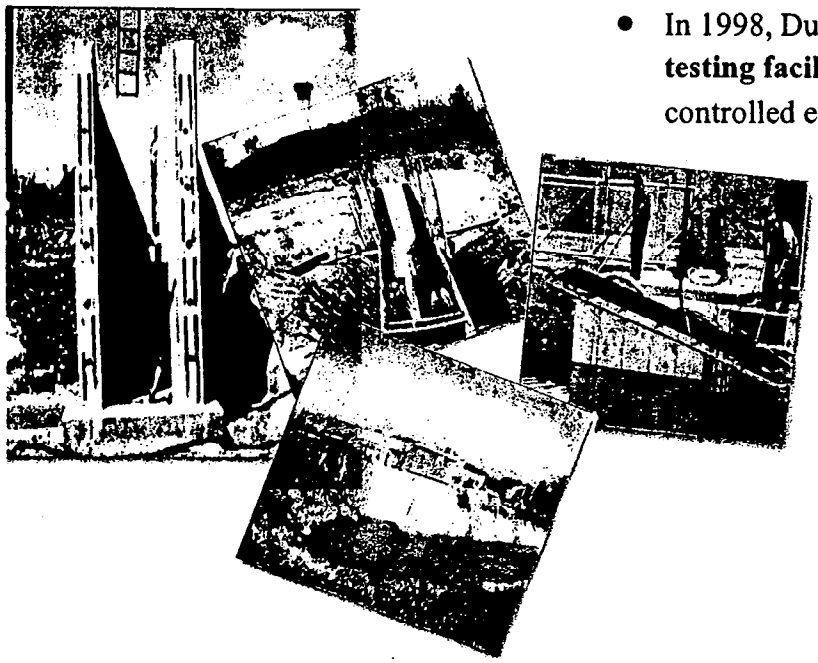

- In 1998, Duramax® Marine LLC built an **800,000-gallon testing facility** to better emulate marine conditions in a controlled environment.
  - Testing facility can test keel coolers **20 feet long and weighing as much as two tons.**
  - Temperature drop, pressure drop and flow rates are monitored and recorded.
  - Initial tests on the same size square-head keel cooler that was tested in the laboratory **validated the computerized testing.**

Quality Manufacturing Processes

- DuraCoolers™ are manufactured using a **two- piece header design** so the keel cooler header can be brazed together on both the inside and outside.
- Two piece headers and tubes are manufactured using **90/10 cupro-nickel**, which has excellent heat transfer properties and sea growth resistant strength.
- Duramax® Marine LLC uses premium grade **silver solder** for maximum cooler **flexibility** at cooler joints.
- Unlike the traditional keel coolers, DuraCoolers™ have **coarsely-threaded nozzles**, which is preferred by keel cooler installers.
- **Every DuraCooler™ is pressure and vibration-tested** before being shipped to ensure the cooler is free from leaks.

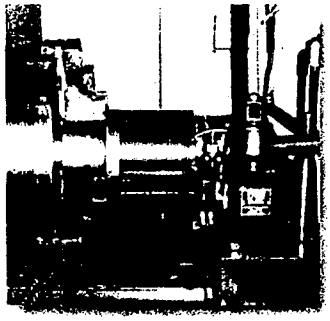

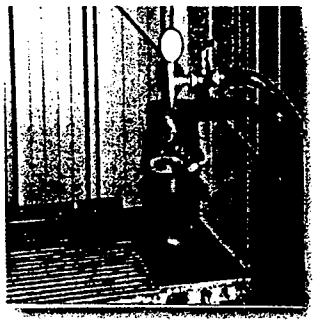

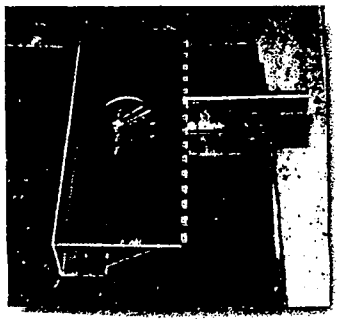

00096

© 2000 by Duramax® Marine LLC file: pm/bk/c/mydoc/duracoolersalestool041700

DuraCooler™

PATENT PENDING

A new angle on cooling technology

Get the edge with DuraCooler.™ In the commercial marine industry you need every competitive advantage you can get. That's why we've developed the DuraCooler™—one of the most innovative and efficient keel coolers on the market today. DuraCooler's™ unique streamlined header design enhances internal coolant and external seawater flow while reducing system pressure drop. The new design also provides optimum heat transfer efficiency, resulting in smaller keel cooler requirements and a reduction in cooling system costs. On replacement retrofits, this increased cooling capacity within the same installation footprints provides the vessel owner an additional cooling safety factor.

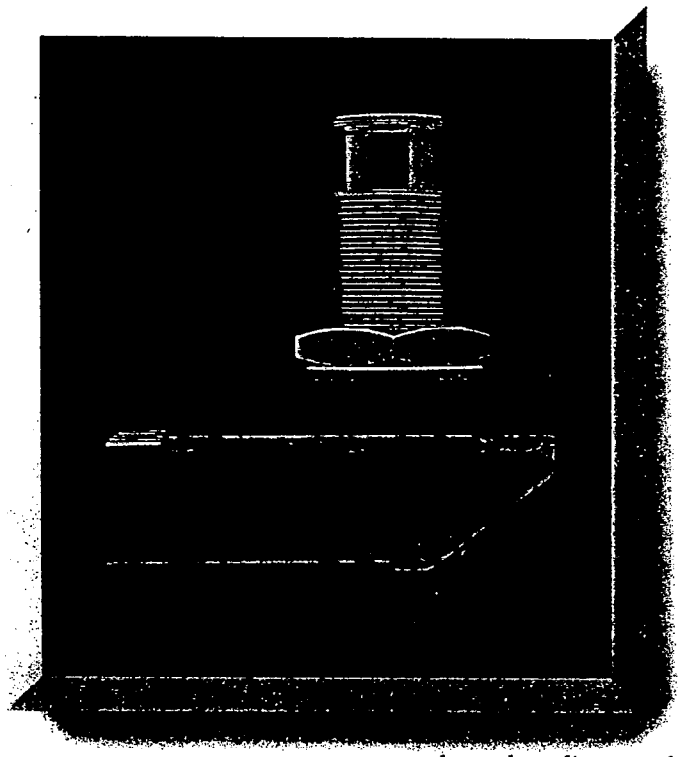

Superior Materials. Superior Performance. We understand the demands of the commercial marine market. That's why we manufacture every DuraCooler™ with 90/10 cupronickel tubing; a high-strength material with exceptional heat transfer properties that has excellent resistance to corrosive and erosive effects of seawater. Each header is manufactured with heavy gage material for exceptional strength and durability. Plus, our two-piece header design allows for brazing seams inside and outside with premium-grade silver solder—providing maximum strength and leak resistance in a single-piece structure that is easier to install. And every DuraCooler™ is pressure tested before we ship from the factory.

Custom sized for your vessel's needs. Whether new construction or retrofit, the DuraCooler™ is the perfect fit for your needs. Our computerized sizing system uses engine specification data, hull location and your vessel's operating conditions to provide a more precise method of keel cooler selection and provides the correct cooling capacity for maximum engine loads and operational efficiency. The end result is an effectively sized keel cooling system, without guesswork.

Unparalleled product support. For over 35 years, Duramax® Marine has been a leading manufacturer in the commercial marine industry. We are proud to offer you high quality, engineered product lines such as Johnson Cutless® Rubber Bearings, Duramax® Sealing Systems, Johnson Commercial Dock Bumpers and now, the new DuraCooler.™ We are continuously searching for ways to improve all our products in our extensive research and development facilities. At Duramax® Marine, you'll receive an unparalleled level of service from professional staff who stay in touch and understand that your success is our success. Duramax® Marine. We'll help you get the edge.

00097

CALL TODAY FOR A FREE SIZING.

DuraCooler®

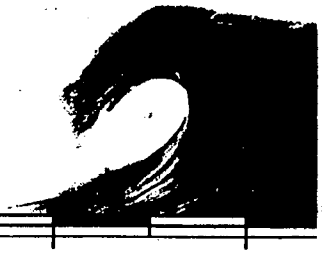

MARCO SHIPYARD
SEATTLE

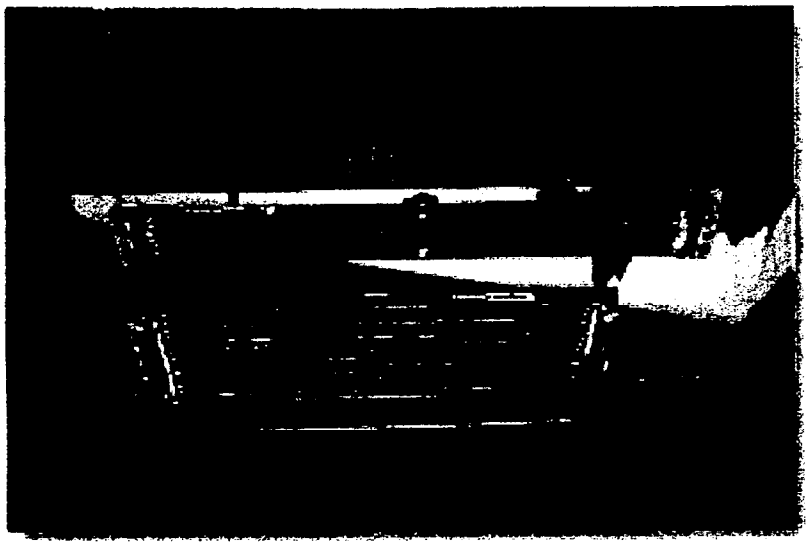

Broadening the scope of its shipbuilding activity, MARCO Shipyard Seattle signed a contract to design and build a pair of pilot station boats for San Francisco Bar Pilots. The all-steel, twin-screw boats will replace the two existing station boats in the Bar Pilots' total fleet of five vessels, each of which is designed to take pilots safely to and from ships entering, leaving, or transiting the San Francisco Bay waterways. One station boat is on duty outside the Golden Gate Bridge at all times, under all conditions, to provide this service.

The new MARCO pilot boats will be 104 feet long, with an overall beam of 29 feet 6 inches, and a depth of 12 feet 7 inches. They will be powered by CAT® 3508B diesels and keel cooled with SC-414-42, SC-420-84 and SC-28-54 DuraCoolers®, the latest innovation in keel cooling technology by Duramax® Marine LLC.

DuraCooler® keel coolers represent a significant advancement in keel cooling technology. Its streamlined header reduces pressure drops in the system and more efficiently uses the coolers' capacity to bring the customer a more efficient, durable keel cooler. And Duramax® Marine LLC has taken the guess work out of keel cooler sizing with its years of research and development and in-house, computerized sizing system. Visit www.duracooler.com to receive your free sizing today.

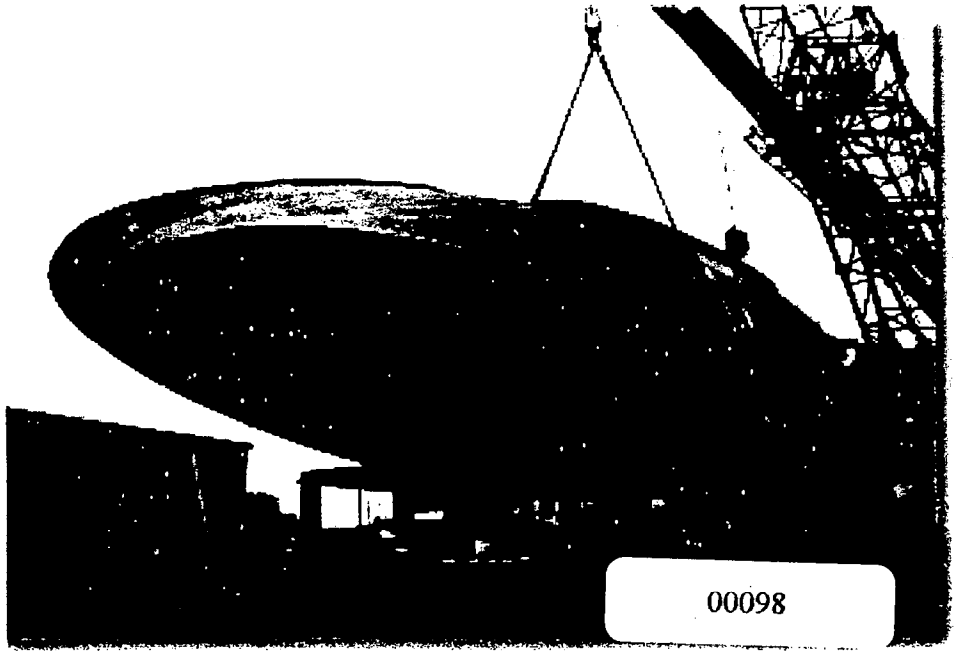

CAT® is a registered trademark of Caterpillar Inc.
Photos & Text compliments of Marco Shipyard

© 2000 by Duramax® Marine LLC
file: g/mar/admin/market/selltools/marcosfpilots100500B

DuraCooler™

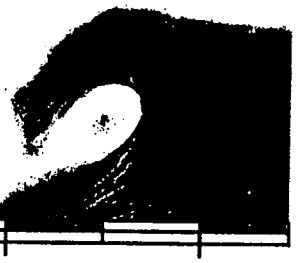

Northport Engineering LIMITED

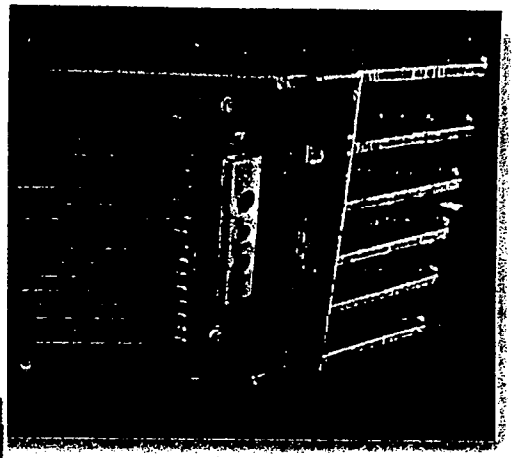

DuraCoolers™ are quickly becoming the keel cooler of choice around the world! Take, for example, Tug Waipapa, one of four harbour tugs being built at Northport Engineering Ltd in Whangarei, New Zealand. Three of these tugs are being built for Ports of Auckland Ltd and one for the Port of Tauranga Ltd. All are 22 meter vessels powered by twin CAT 3516 EIUs and will be operating in the North Island of New Zealand. The tugs will be push button controlled and each will be operated by a crew of two. The main engines are cooled by SC-418-168 units and the Ulstein propeller units, steering and winch hydraulics are cooled by SC-212-120 DuraCoolers by Duramax® Marine LLC and distributed by Morse Controls (NZ) Ltd.

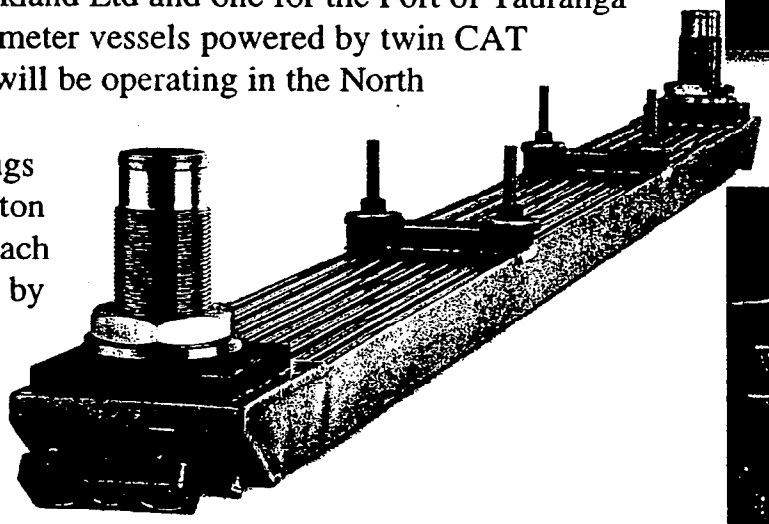

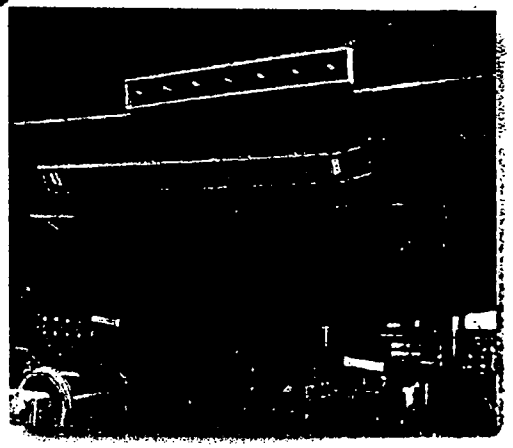

DuraCoolers are the first innovation in keel cooling technology in over half a century. Its streamlined header reduces pressure drops in the system and more efficiently uses the coolers' capacity to bring the customer a more efficient, durable keel cooler. And Duramax Marine LLC has taken the guess work out of keel cooler sizing with its years of research and development and in-house, computerized sizing system. Whether it is for retrofit or new construction, there is a size that meets your requirements.

© 2000 by Duramax® Marine LLC file: bk/u/northport041700

Photos Courtesy of Ford Off Shore Services Ltd New [illegible]

DuraCooler®

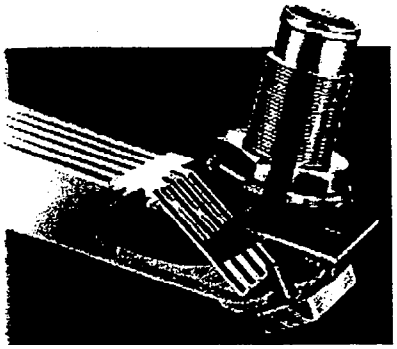

- 90/10 cupro-nickel tubing is resistant to waterflow erosion and serves as an antifoulant.
- Compact, one-piece design makes installation simple.
- Streamlined header design reduces pressure drop in water flowing through the cooler. External water travels more quickly to tubes increasing the heat transfer efficiency of the cooler.
- Custom-sized for your engine specifications and operational requirements.
- Available with through-hull type fittings or non-through-hull flanges.

Tube Cooler Success / Major Breakthrough Testing Results / Commitment to Design

DuraCooler® Sizing Sheet(s)

English	online	(download PDF)
Spanish	online	(download PDF)
Portuguese	online	(download PDF)

DuraCooler® CD Drawings

If you are a commercial boat builder or designer and would like to receive our DuraCooler® CD-ROM, (includes drawings to scale). Click Here to register.

DuraCooler® Installation Manual

(download PDF)

Success of the Rectangular Tube Cooler

- In 1946, the first rectangular tube keel cooler came to the marine market.
- For nearly half a century, this design has enjoyed considerable success in the marine industry for keel cooling of heat sources on marine vessels.
- This type of cooler has been successful in the marine industry for three reasons:

00100

1. Large amounts of tubing surface area in a relatively **small, compact footprint**. This equates to a highly efficient heat exchange device.
2. **Durability of design**: In many applications, the design has with stood more than twenty years of continuous use in severe marine environments.
3. **Ease of installation**: Shipyard workers appreciate the ease of installation of the one piece keel cooler.

back to top

First Major Breakthrough in Keel Cooling Technology

- In 1997, Duramax® Marine LLC initiated a **research and development program** to identify opportunities to improve the operational efficiency of the square-headed outboard keel cooler.
- **Finite element computer** studies were conducted to determine internal and external flow patterns, pressure drop and heat transfer characteristics for different heat exchanger geometries.
- Flow pattern studies determined that the outside tubes, tubes number 1 and number 8, **(the outside tubes) in the square-headed keel cooler tested were being used inefficiently** despite the fact these tubes have the greatest potential heat rejection per linear foot.
- The design of the existing square header is the reason for this inefficiency.
- Duramax® Marine LLC immediately **began to develop a more efficient header design**.
- Duramax® Marine LLC engineered the new streamlined header design to further **enhance interior and exterior flow patterns** and, at the same time, **reduce the overall pressure drop** within the keel cooler unit.

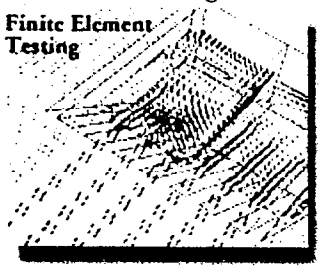
Finite Element Testing

- In initial testing, the design also **increased coolant flow to the outside tubes** that had been used less efficiently in the traditional keel cooler design.
- Coolant flow distribution **in the outer tubes** increased 35% **after the geometry modifications**.
- Heat rejection **in the outer tubes** jumped 45%.
- Overall heat transfer **in the DuraCooler® SC-48-96** increased 17% over the square-headed unit of equal size in initial testing.
- The DuraCooler® design **with increased** coolant flow to the outside tubes will result in smaller units versus traditional square headers and lower costs.
- Overall **footprint** may be **reduced** as much as **42%** in some units.

(see graphs below)

back to top

Testing Results

Traditional Design Tested

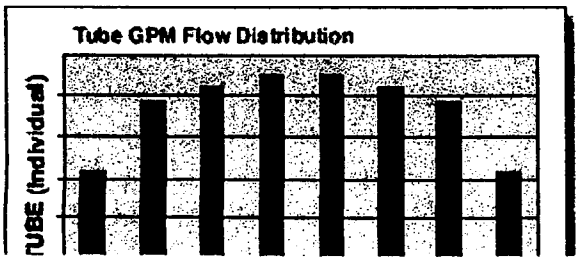

DuraCooler®

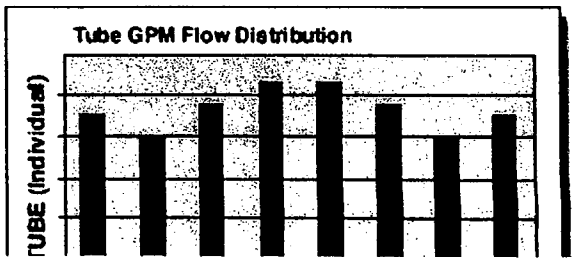

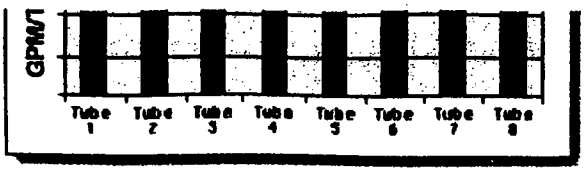

Computer modeling of the traditional design keel cooler tested showed poor coolant flow through tubes 1 & 8.

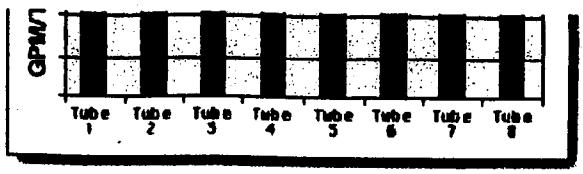

DuraCooler® header design change produced an increase of 35% in the outside tubes.

Traditional Design Tested

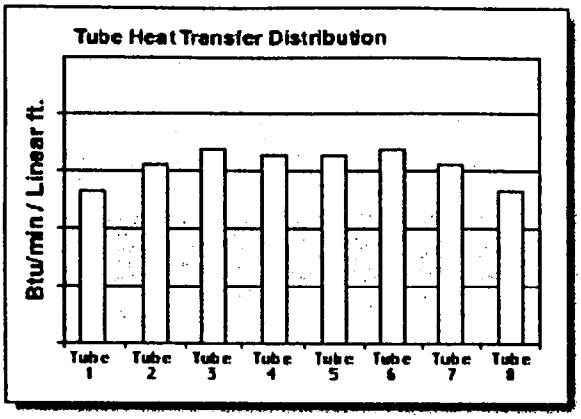

Computer modeling of the traditional design keel cooler tested indicated the outside tubes were being used least efficiently even though these tubes had the greatest potential heat rejection per linear foot.

DuraCooler®

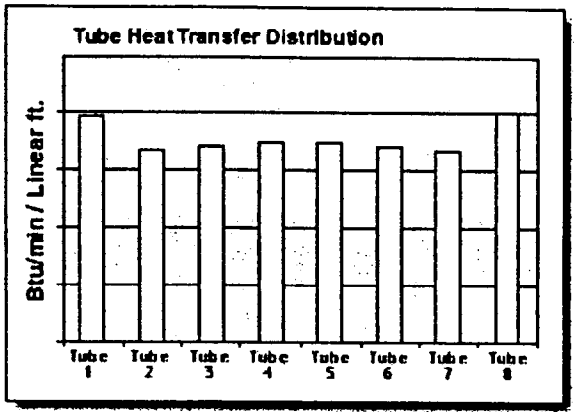

DuraCooler® header design increased heat transfer in the outside tubes by 45%!

Note: Study above conducted on a SC-48-96 and equivalent size square-head unit.
Studies conducted by: Flow Simulations Inc. e-mail: info@flowsimulations.com

Overall heat transfer in the DuraCooler SC-48-96 increased by 17% over the square-headed, traditional design keel cooler unit tested of equal size in initial testing.

Back to top

Commitment to Design Improvements

- Duramax® Marine LLC, with promising results from the finite element testing proceeded to the next phase of testing, actual unit testing in its research pond.
- In 1998, Duramax® Marine LLC built an **800,000-gallon testing facility** to better emulate marine conditions in a controlled environment.
- Testing facility can test keel coolers **20 feet long and weighing as much as two tons**

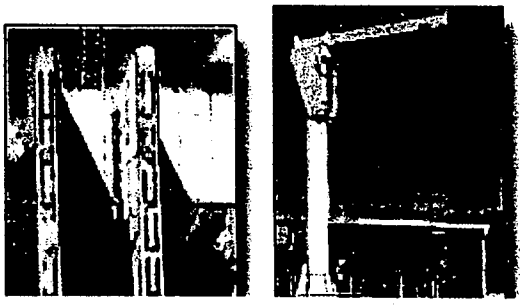

- Temperature drop, pressure drop and flow rates are monitored and recorded.
- Initial tests on the same size square-head keel cooler that was tested in the laboratory **validated the computerized testing**.

Back to top

---

contact us | relationships | products | innovations | trade shows | home
bearings | cooling systems | sealing systems
fendering systems

Duramax® Marine LLC
17990 Great Lakes Parkway
Hiram, OH 44234 USA
Phone: 440.834.5400
Fax: 440.834.4950 or Fax: 800.497.9283 (US and Canada)
© 2001, Duramax® Marine LLC. All rights reserved.

00103

VERSION 2 NATIONAL FISHERY

from the inside out.

Introducing DuraCooler™ from Duramax® Marine — one of the most innovative and efficient keel coolers on the market today. DuraCooler™ redefines the cutting-edge of cooler design. Its unique streamlined header enhances internal coolant and external seawater flow as it reduces system pressure drop. And that means increased heat transfer efficiency, for smaller keel cooler requirements and a reduction in cooling system costs.

Built to last, DuraCooler™ utilizes high-strength 90/10 cupro-nickel tubing; with exceptional heat transfer properties and excellent resistance to corrosive/erosive effects of seawater. And the computerized Duramax® sizing system helps to make for a custom fit on new construction or retrofit.

DuraCooler™ is the latest innovation from the people who bring you Johnson Cutless™ Bearings, Duramax® Sealing Systems and Johnson Commercial Dock Bumpers. At Duramax Marine, we're constantly developing engineered products designed to make your business run smoother – and keep your vessels where they belong — out on the water. Call today for a free sizing!

DURAMAX MARINE

WWW.DURAMAX-MARINE.COM

A new al
Bulldog
16025 JOHNSON STREET * P.O. BOX 67 * MIDDLEFIELD, OHIO 44062-0067 * 440.632.1616 * FAX 440.632.5265

DURAMAX MARINE LLC

Innovative, efficient DuraCooler™ is redefining the cutting-edge of keel cooler design. Its **unique streamlined header** enhances internal coolant and external seawater flow to reduce system pressure drop and increase heat transfer efficiency—for smaller keel cooler requirements and a reduction in cooling system costs. DuraCooler utilizes **high-strength 90/10 cupro-nickel tubing** for improved heat transfer and resistance to corrosive/erosive effects of seawater. Plus, the computerized Duramax Marine® sizing system helps make a custom fit on a new construction or retrofit.

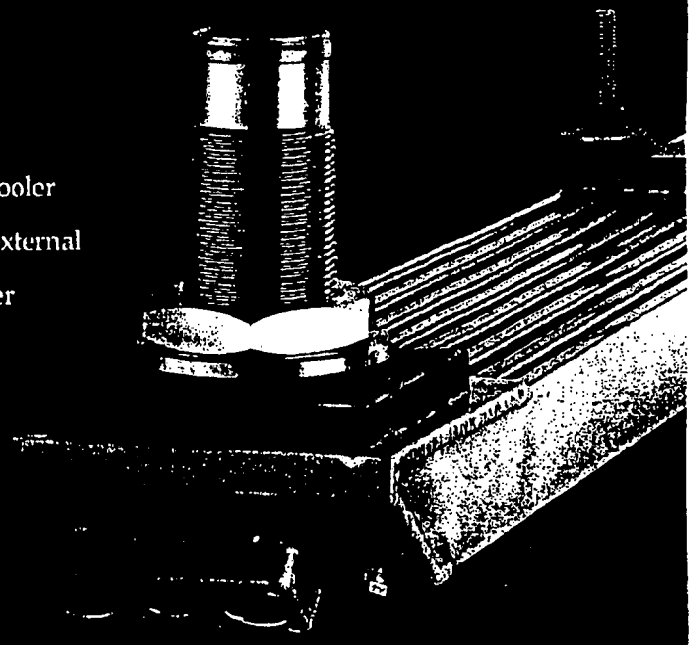

15986 VALPLAST ROAD ▪ P.O. BOX 250 ▪ MIDDLEFIELD, OHIO 44062-0250 ▪ 440.632.1616 ▪ FAX 440.632.5265 ▪ WWW.DURAMAX-MARINE.COM

11/5/99
4:10pm
Go!

90100

INLAND RIVER GUIDE

DURAMAX® MARINE

Quality Engineered For Better Performance

JOHNSON CUTLESS® DEMOUNTABLE RUBBER STAVE BEARINGS

Individual staves install around shaft in stern tube or strut. Assembly can be made with shaft in place.

REVOLUTIONARY NEW COOLING TECHNOLOGY—DURACOOLER(M)(R)

With an innovative streamlined header, the DuraCooler(M)(R) increases cooling efficiency for new construction and retrofit. The new design enhances internal coolant and external seawater flow, increasing heat transfer efficiency while reducing system pressure drop. For new construction, this results in smaller keel cooler requirements and a reduction in cooling system costs.

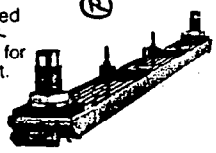

JOHNSON CUTLESS® SLEEVE AND FLANGED BEARINGS

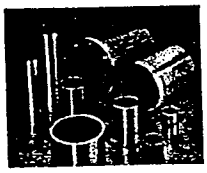

Cut maintenance time with naval brass Sleeve or Flanged Bearings. Non-Metallic Sleeve Bearings, also available, are ideal where corrosion or electrolysis is a problem. Full range of sizes.

JOHNSON HEAVY STUFFING BOXES AND STERN CASTINGS

Select from bronze, steel or aluminum. "Air-Seal" type features inflatable rubber ring which seals around shaft, allows packing change without dry docking. Full range of types and sizes.

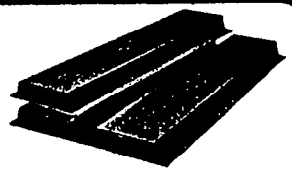

JOHNSON TOW KNEES
Single Tow Knee Pusher Plates

Quality engineered Johnson Tow Knee Pusher Plates provide superior protection. These impact absorbing bumpers help give vessels longer and better service life. Choice of steel or aluminum plate.

Double Tow Knee Pusher Plates

Double your protection plus mounting and welding ease with twin 2 inch thick rubber pads securely vulcanized to a single steel or aluminum plate. Count on tough Johnson Tow Knees to stand up under rugged operating conditions.

Precurved and Segmented Corner Tow Knee Pusher Plates

These curved tow knees designed for maximum corner protection are engineered to absorb and cushion impact over long periods and varied operating conditions. Their 2-inch quality rubber pad is securely bonded to the plate, assuring long-lasting trouble-free service.

JOHNSON COMMERCIAL DOCK BUMPERS

Duramax offers a wide variety of durable rubber fendering for vessels and docks including D-sections, O-sections, Rectangular and Wing Types – all featuring built-in absorbing qualities.

DURAMAX® MARINE LLC

15986 Valpast Road
P.O. Box 250
Middlefield, Ohio 44062-0250 U.S.A.

Phone: (440) 632-1616 Fax: (440) 632-5265 Fax: (800) 497-9283 (US and Canada)

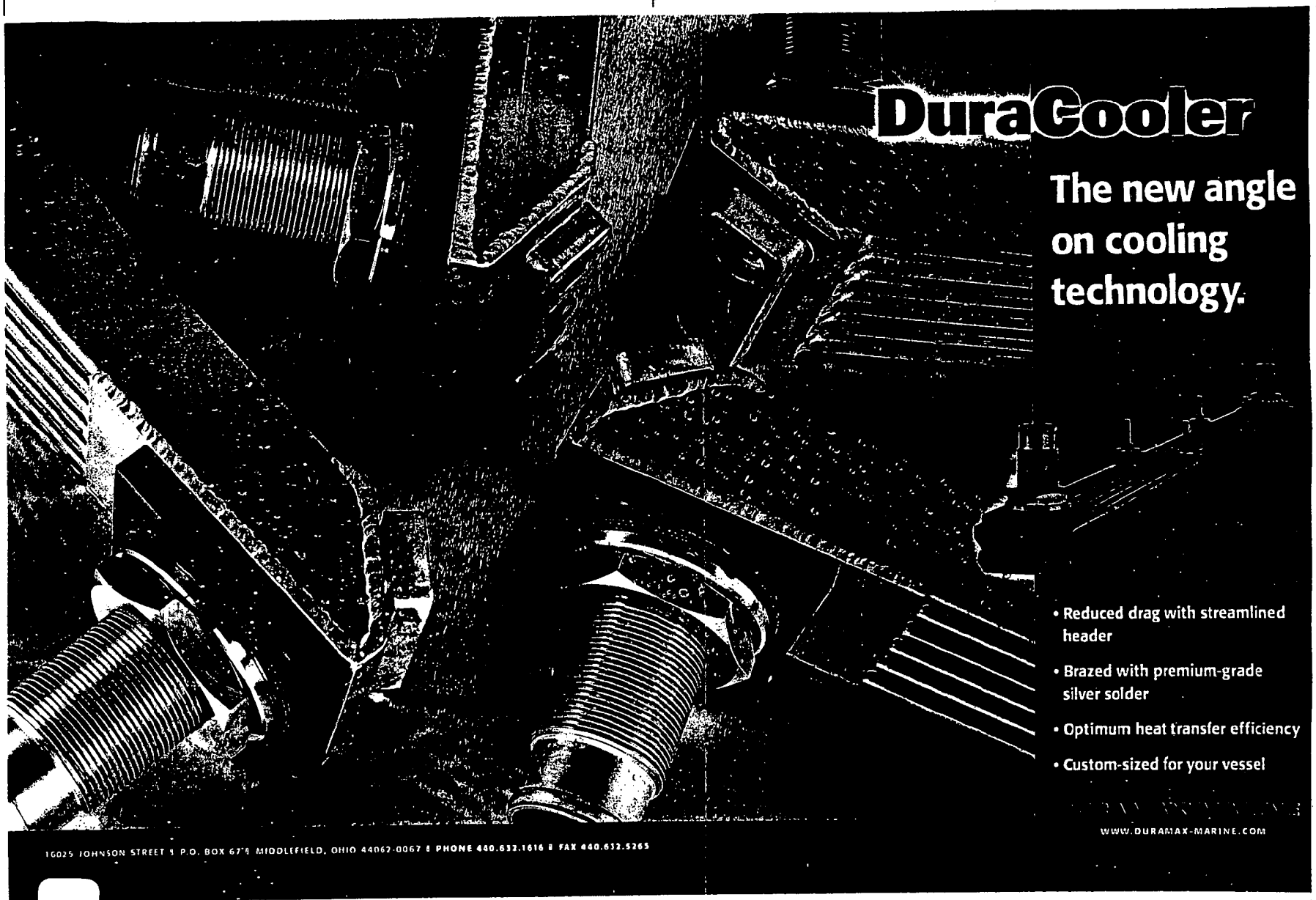
DuraCooler
The new angle on cooling technology.
• Reduced drag with streamlined header
• Brazed with premium-grade silver solder
• Optimum heat transfer efficiency
• Custom-sized for your vessel
WWW.DURAMAX-MARINE.COM
16025 JOHNSON STREET ▪ P.O. BOX 67 ▪ MIDDLEFIELD, OHIO 44062-0067 ▪ PHONE 440.632.1616 ▪ FAX 440.632.5265

As Seen In

National Fisherman

The Best By Test

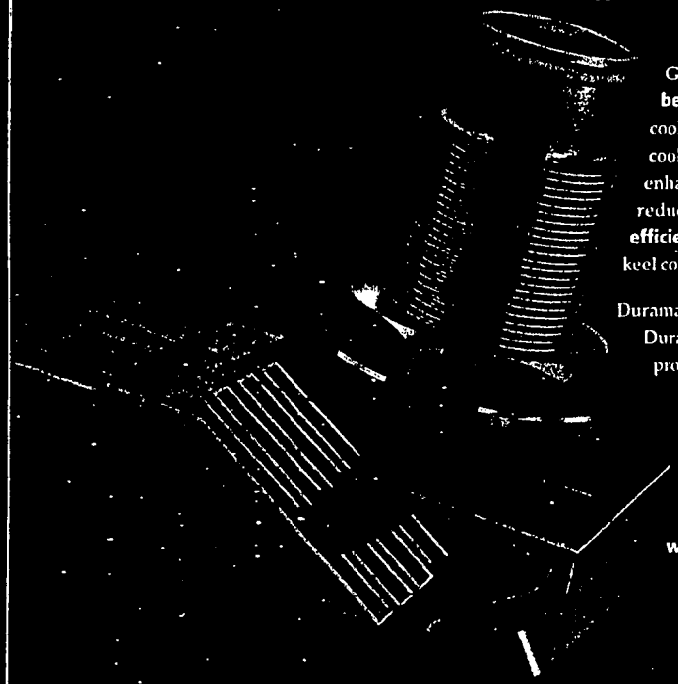

Go to **www.duracooler.com** and see why Duracooler™ is **the best by test.** DuraCooler™—the greatest innovation in keel cooler technology in over 40 years—is the most efficient keel cooler in the industry. Its **unique, streamlined header** enhances internal coolant and external seawater flow, while reducing system pressure drop and **increasing cooling efficiency.** This means optimum heat transfer efficiency, smaller keel cooler requirements and a reduction in cooling system costs.

Duramax Marine is **constantly looking for ways to improve** the DuraCooler™ design. Our extensive, full-scale, in-house testing program helps identify ways to improve our keel coolers, making them **smaller...and more affordable.**

DuraCooler™ is quickly becoming the keel cooler of choice by owners, architects and shipyards around the world. **So forget the rest...and choose the best by test**—the DuraCooler™ from Duramax Marine. Visit **www.duracooler.com** for your free sizing today.

FISH EXPO Worldbent NORTHWEST Booth 446

[illegible] VALP AST ROAD P.O. BOX [illegible]50 MIDDLEFIELD OHIO 44062-0250 **440.632.1616** **FAX 440.632.5265** WWW.DURAMAX-MARINE.COM

00109

DuraCooler® keeps the pressure on!

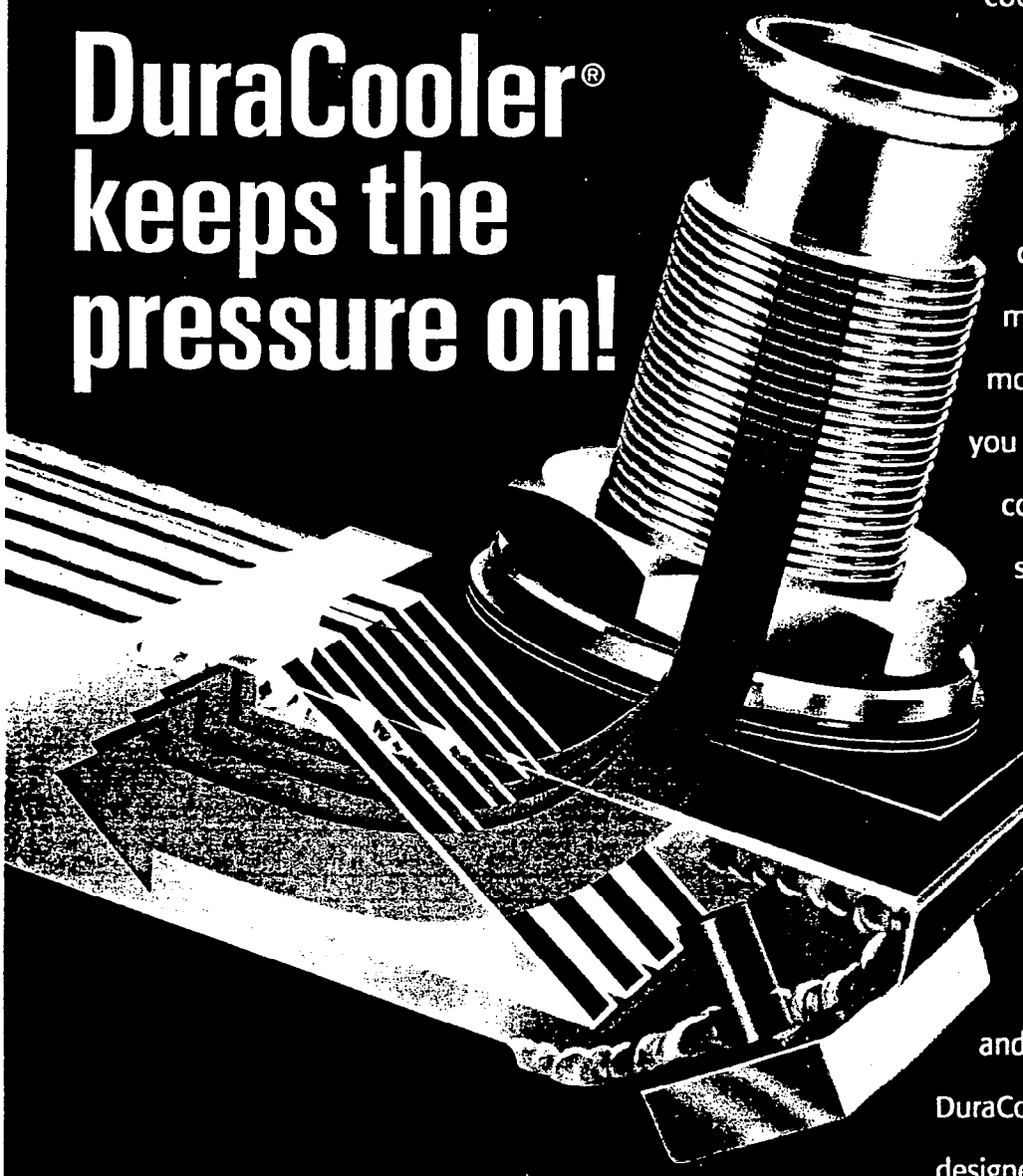

Large system pressure drops can mean larger, more expensive keel coolers. The smooth tubes, streamlined header and internal configuration of DuraCooler® keep pressure drop and keel cooler costs to a minimum. And to custom fit a model to the specifications that you provide, we base our keel cooler sizing system on full-scale keel cooler testing.

Duramax® Marine can provide you with heat exchange solutions that are field tested, along with a variety of quality marine products, customer-driven services and valuable tools, including scaled DuraCooler® drawings on CD-ROM for designers. You can depend on our commitment to innovation.

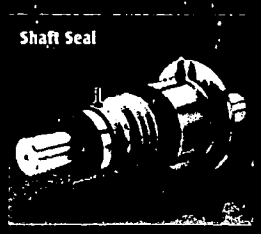

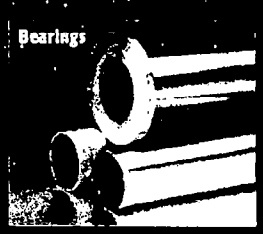

For your free sizing, or DuraCooler® designer CD-ROM, visit www.duracooler.com.

00110

INE LLC WWW.DURAMAX-MARINE.COM

17990 GREAT LAKES PARKWAY . HIRAM, OHIO 44234 . PHONE 440.834.5400 . FAX 440.834.4950

4/11/01

Text is correct per email dated 4/09/01 12:59pm.

Text & concept approved by legal.

DuraCooler® keeps the pressure on!

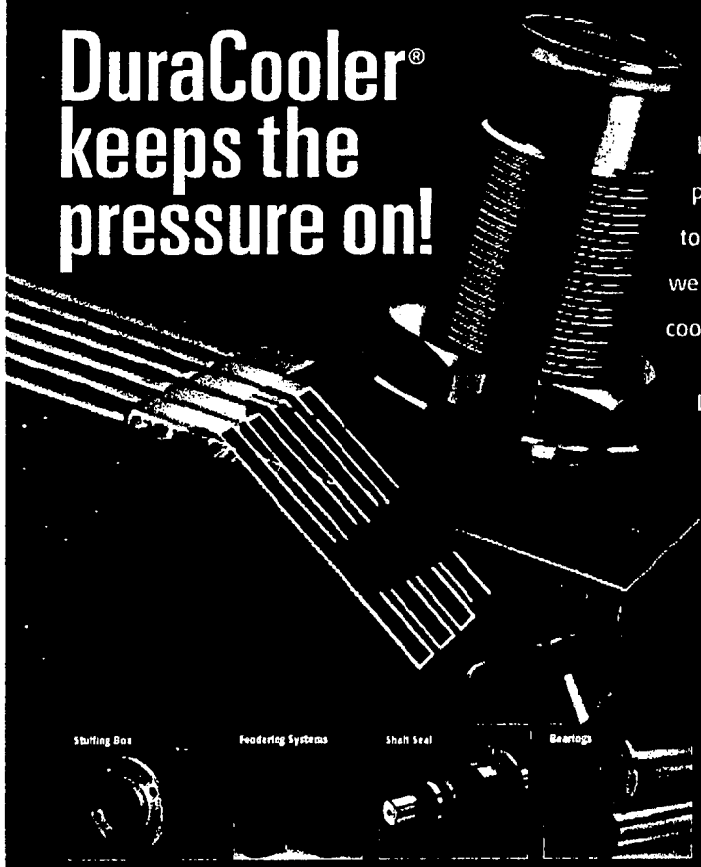

Large system pressure drops can mean larger, more expensive keel coolers. The smooth tubes, streamlined header and internal configuration of DuraCooler® keep pressure drop and keel cooler costs to a minimum. And to custom fit a model to the specifications that you provide, we base our keel cooler sizing system on full-scale keel cooler testing.

Duramax® Marine can provide you with heat exchange solutions that are field tested, along with a variety of quality marine products, customer-driven services and valuable tools, including scaled DuraCooler® drawings on CD-ROM for designers. You can depend on our commitment to innovation.

For your free sizing, or DuraCooler® designer CD-ROM, visit www.duracooler.com.

17990 GREAT LAKES PARKWAY HIRAM, OHIO 44234 **PHONE 440.834.5400** **FAX 440.834.4950** WWW.DURAMAX-MARINE.COM

00111

than air filled, the collar around the boat is unlikely to be damaged or punctured if it strikes an obstruction.

Unlike Rigid Inflatable Boats (RIBs), which are easily damaged and require regular maintenance, the closed cell foam collars of the unique design are 'puncture proof' and capable of handling the kind of knocks and sheer hard work that rescue boats must withstand.

According to international expert Hamish McDonald, Director of Maritime Rescue International (MRI) at Stonehaven in Scotland, the T9000 provides an excellent combination of "a good working platform with plenty of deck space, good seakeeping and close-in handling".

The Holyhead-based company developed the new craft with the help of a 'Business Angel', following assistance from XENOS,

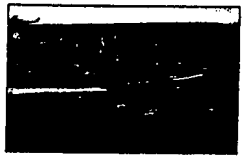

Five examples of the innovative T9000 will be built for use by the RNLI on the Thames.

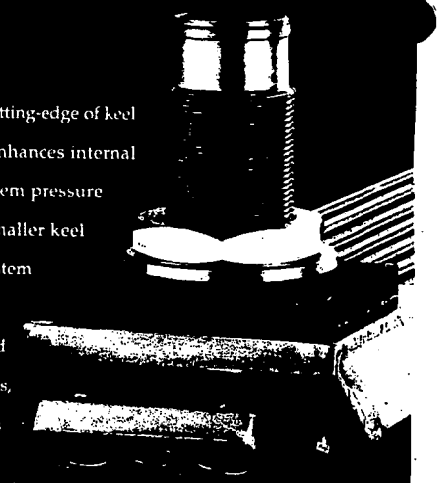

Innovative, efficient DuraCooler® is redefining the cutting-edge of keel cooler design. Its **unique streamlined header** enhances internal coolant and external seawater flow to reduce system pressure drop and increase heat transfer efficiency—for smaller keel cooler requirements and a reduction in cooling system costs. DuraCooler® utilizes **high-strength 90/10 cupro-nickel tubing** for improved heat transfer and resistance to corrosive/erosive effects of seawater. Plus, the computerized Duramax® Marine sizing system helps make a custom fit on a new construction or retrofit.

DURAMAX® MARINE LLC

17990 GREAT LAKES PARKWAY • HIRAM OHIO 44234 USA • PHONE 440 834 5400 FAX 440 834 4950

00112

DuraCooler™

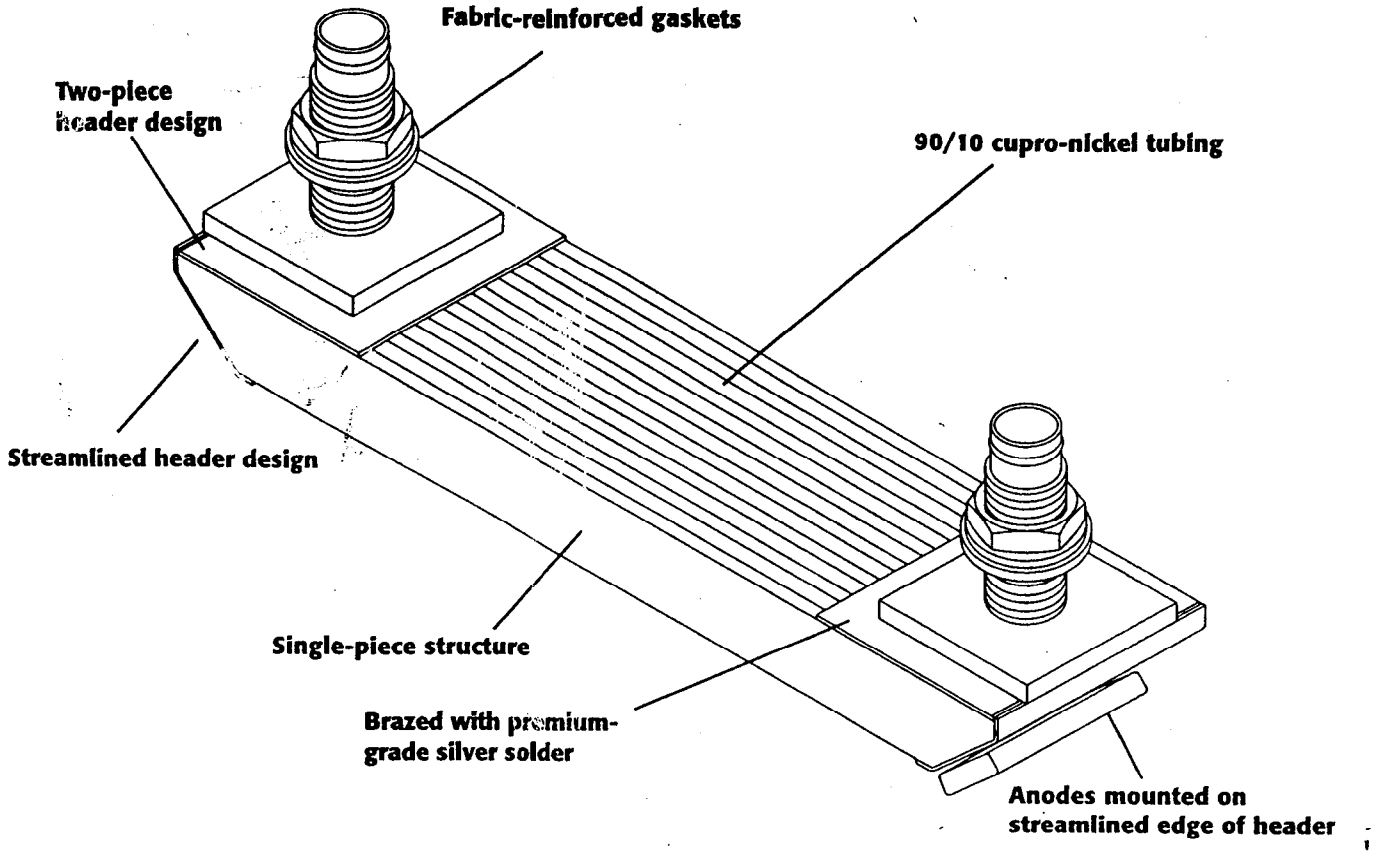

Features/Benefits

- **90/10 cupro-nickel tubing** is resistant to waterflow erosion and serves as an antifoulant.
- **Heavy gage material for headers** gives maximum strength and durability.
- **Two-piece header design** allows access for brazing on inside and outside of header which, in turn, increases the integrity and reduces the chance of leakage.
- **Streamlined header design** allows less pressure drop of water flowing through the cooler. External water travels more quickly to tubes increasing the heat transfer efficiency of the cooler. Streamlined design provides better fuel efficiency and less drag. Deflects debris away from the cooler.
- **Brazed with premium-grade silver solder** for flexibility.
- **Footprint retrofitable to alternative cooler installations** makes for ease of installation and minimal assembly.
- **Fabric-reinforced gaskets** offer better gasket integrity and longer life.
- **Anodes mounted on streamlined edge of header** provide less stand-off distance from hull, less drag, better fuel efficiency and are less likely to be damaged by debris.
- **Computerized sizing program** finds the most efficiently sized cooler for each application without the risk of overheating.
- **Half-million dollar research facility** enables full-scale in-house testing on actual units under various conditions. Allows us to continually improve our keel cooler and provide a better product, and more reliable information to the customer.
- **Vertically integrated company** provides added control over product design and quality.

00116

16025 Johnson Street
P.O. Box 67
Middlefield, Ohio 44062-0067 USA
PHONE 440.632.1616
FAX 800.497.9283 *USA & Canada*
or 440.632.5265
E-MAIL info@duramaxmarine.com
WEB www.duramax-marine.com

DURAMAX® MARINE

DURAWELD®

Keel Coolers

801 Odette Street
Houma, Louisiana 70363
Telephone: 504-876-3120
504-876-6944
Fax: 504-876-0305

00486

DURAWELD®
Keel Coolers

Mission Statement

East Park Radiator is committed to providing impeccable quality and service to its customers through continued research, design and testing of its own products and the other products it services for the marine and oilfield industry.

DURAWELD®
Keel Coolers

History

East Park Radiator was started in 1962 as a radiator repair and battery facility. Since its inception, East Park Radiator has evolved into a major repair facility servicing radiators, tube and shell heat exchangers, aftercoolers, inner coolers, air exchanger and keel coolers for the marine and oilfield industry. After years of extensive keel cooler repairs, East Park Radiator has applied its knowledge and experience into developing its own keel cooler known as the DURAWELD® Keel Cooler. East Park Radiator obtained insight, through the failures and the concerns of its customers that resulted in several significant changes to its DURAWELD® Keel Cooler. These changes resulted in a higher quality durable product with an exceptionally fast delivery time.

DURAWELD®
Keel Coolers

- Welded Construction For Dependability & Durability
- Seamless 90/10 Copper-Nickel Rectangular Tubes
  - With 0.070" Wall Thickness
  - Exceptional Heat Transfer Properties
  - Excellent Corrosion/Erosion Resistance To The Effects Of Sea Water
  - Exceptional Anti-Fouling Capabilities
- Many Models Available
  - Interchangeable With The Competition
- Each Unit Equipped With Cathodic Protection
- Before Delivery; Each Unit Is Assembled, Pressure Tested And Hydrostatically Tested
- Full Scale Heat Transfer Dynamometer
- Continued Research, Design And Testing Of Keel Coolers
  Example: Flange Mounted Keel Coolers To Be In Full Production Soon
- Redesigned manifold to improve water flow and pressure drops
- Full Line Of Replacement Parts In Stock
- Services:
  - 24 Hour Emergency Delivery Upon Request (Subject To Prior Sale)
  - Clean & Repair Of All Makes And Models Of Keel Coolers

Duraweld® Keel Cooler

0008 SERIES
SINGLE PASS

MODEL	A	B	C	D	E
0408	31 1/4	24	---	---	32 5/8
0508	37 1/4	30	---	---	38 5/8
0608	43 1/4	36	1	18	44 5/8
0708	49 1/4	42	---	---	50 5/8
0808	55 1/4	48	1	24	56 5/8
0908	61 1/4	54	---	---	62 5/8
1008	67 1/4	60	1	30	68 5/8
1108	73 1/4	66	1	33	74 5/8
1208	79 1/4	72	1	36	80 5/8
1308	85 1/4	78	1	39	86 5/8
1408	91 1/4	84	1	42	92 5/8
1508	97 1/4	90	2	30	98 5/8
1608	103 1/4	96	2	32	104 5/8
1708	109 1/4	102	2	34	110 5/8
1808	115 1/4	108	2	36	116 5/8
1908	121 1/4	114	2	38	122 5/8
2008	127 1/4	120	2	40	128 5/8
2208	139 1/4	132	2	44	140 5/8
2408	151 1/4	144	2	48	152 5/8
2608	163 1/4	156	2	52	164 5/8
2808	175 1/4	168	3	42	176 5/8
3008	187 1/4	180	3	45	188 5/8

ALL DIMENSIONS ARE IN INCHES.

MINIMUM HULL RECESS DIMENSIONS FOR DURAWELD KEEL COOLERS:

OVERALL LENGTH + 3 INCHES

OVERALL WIDTH + 3 INCHES

HULL RECESS DIMENSIONS ARE MINIMUM RECESS DIMENSIONS AND DO NOT TAKE INTO CONSIDERATION THE USE OF LARGE ANODE BLOCKS BEING IN THE RECESS.

SPECIFICATIONS ARE SUBJECT TO CHANGE WITHOUT NOTICE.

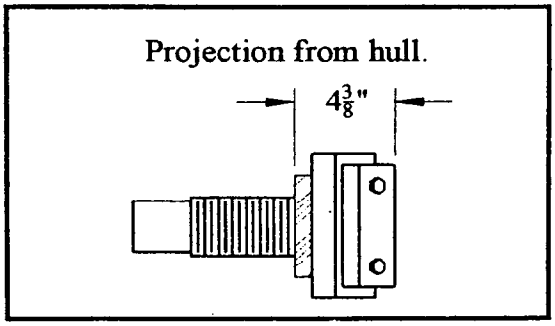

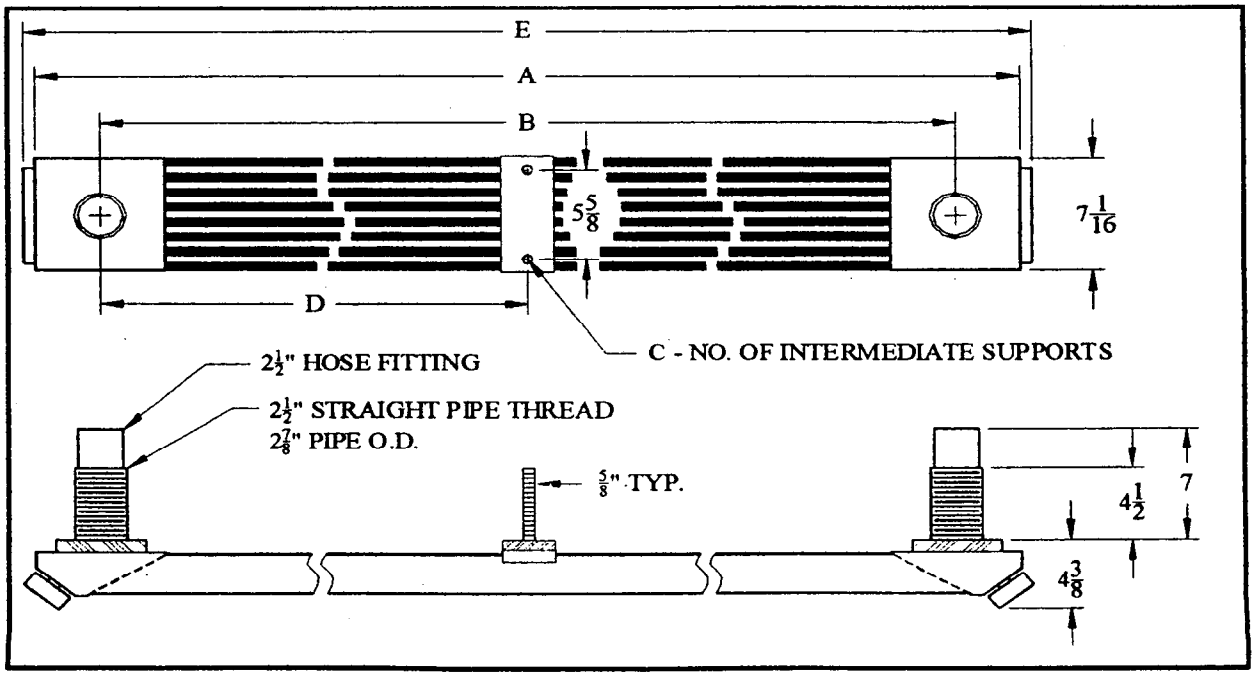

Duraweld® Keel Cooler

0010 SERIES
SINGLE PASS

MODEL	A	B	C	D	E
0410	31 1/4	24	--	---	32 5/8
0510	37 1/4	30	--	---	38 5/8
0610	43 1/4	36	--	---	44 5/8
0710	49 1/4	42	--	---	50 5/8
0810	55 1/4	48	--	---	56 5/8
0910	61 1/4	54	--	---	62 5/8
1010	67 1/4	60	1	33	68 5/8
1110	73 1/4	66	1	33	74 5/8
1210	79 1/4	72	1	36	80 5/8
1310	85 1/4	78	1	39	86 5/8
1410	91 1/4	84	1	42	92 5/8
1510	97 1/4	90	2	30	98 5/8
1610	103 1/4	96	2	32	104 5/8
1710	109 1/4	102	2	34	110 5/8
1810	115 1/4	108	2	36	116 5/8
1910	121 1/4	114	2	38	122 5/8
2010	127 1/4	120	2	40	128 5/8
2210	139 1/4	132	2	44	140 5/8
2410	151 1/4	144	2	48	152 5/8
2610	163 1/4	156	2	52	164 5/8
2810	175 1/4	168	3	42	176 5/8
3010	187 1/4	180	3	45	188 5/8

ALL DIMENSIONS ARE IN INCHES.

MINIMUM HULL RECESS DIMENSIONS FOR DURAWELD KEEL COOLERS:

OVERALL LENGTH + 3 INCHES

OVERALL WIDTH + 3 INCHES

HULL RECESS DIMENSIONS ARE MINIMUM RECESS DIMENSIONS AND DO NOT TAKE INTO CONSIDERATION THE USE OF LARGE ANODE BLOCKS BEING IN THE RECESS.

SPECIFICATIONS ARE SUBJECT TO CHANGE WITHOUT NOTICE.

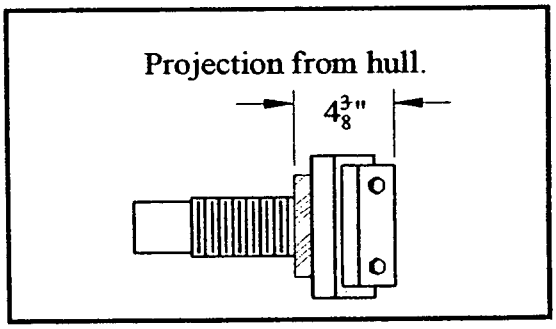

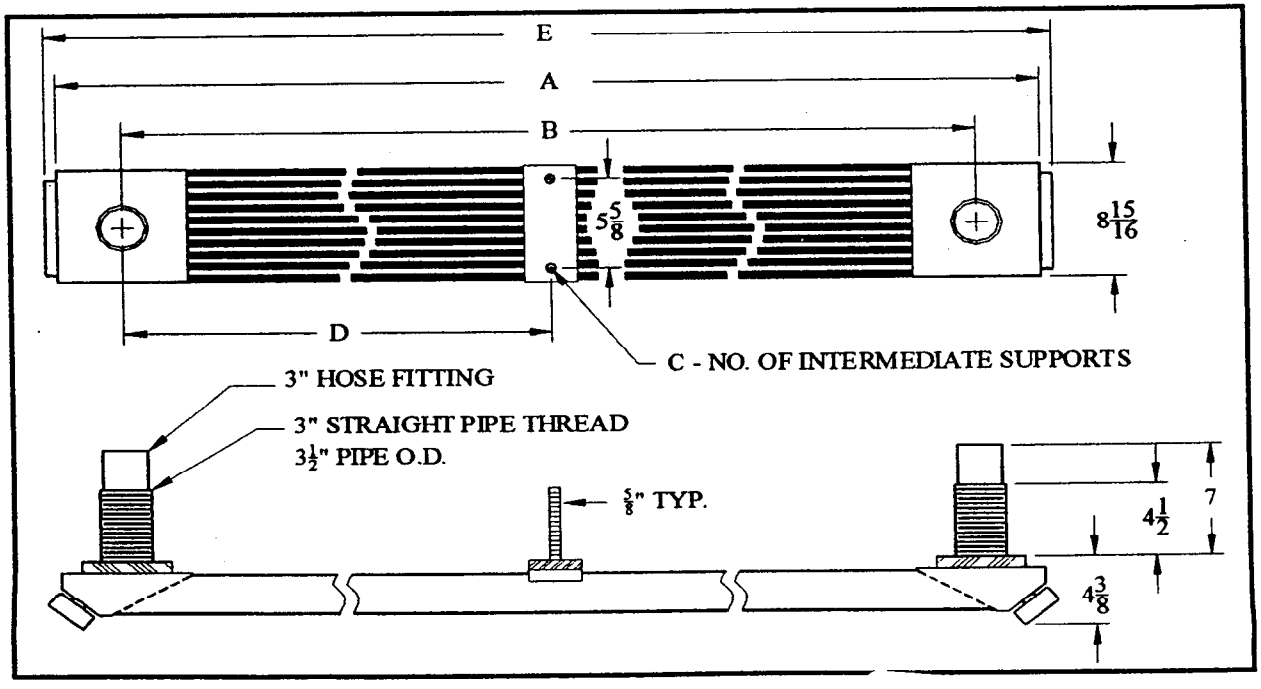

Duraweld® Keel Cooler

0012 SERIES
SINGLE PASS

MODEL	A	B	C	D	E
0412	31 1/4	24	--	--	32 5/8
0512	37 1/4	30	--	--	38 5/8
0612	43 1/4	36	--	--	44 5/8
0712	49 1/4	42	--	--	50 5/8
0812	55 1/4	48	--	--	56 5/8
0912	61 1/4	54	--	--	62 5/8
1012	67 1/4	60	--	--	68 5/8
1112	73 1/4	66	1	33	74 5/8
1212	79 1/4	72	1	36	80 5/8
1312	85 1/4	78	1	39	86 5/8
1412	91 1/4	84	1	42	92 5/8
1512	97 1/4	90	2	30	98 5/8
1612	103 1/4	96	2	32	104 5/8
1712	109 1/4	102	2	34	110 5/8
1812	115 1/4	108	2	36	116 5/8
1912	121 1/4	114	2	38	122 5/8
2012	127 1/4	120	2	40	128 5/8
2212	139 1/4	132	2	44	140 5/8
2412	151 1/4	144	2	48	152 5/8
2612	163 1/4	156	2	52	164 5/8
2812	175 1/4	168	3	42	176 5/8
3012	187 1/4	180	3	45	188 5/8

ALL DIMENSIONS ARE IN INCHES.

MINIMUM HULL RECESS DIMENSIONS FOR DURAWELD KEEL COOLERS:

OVERALL LENGTH + 3 INCHES

OVERALL WIDTH + 3 INCHES

HULL RECESS DIMENSIONS ARE MINIMUM RECESS DIMENSIONS AND DO NOT TAKE INTO CONSIDERATION THE USE OF LARGE ANODE BLOCKS BEING IN THE RECESS.

SPECIFICATIONS ARE SUBJECT TO CHANGE WITHOUT NOTICE.

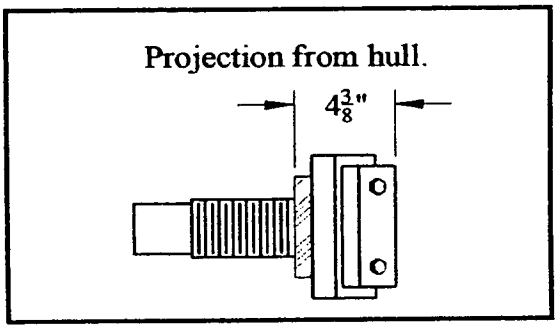

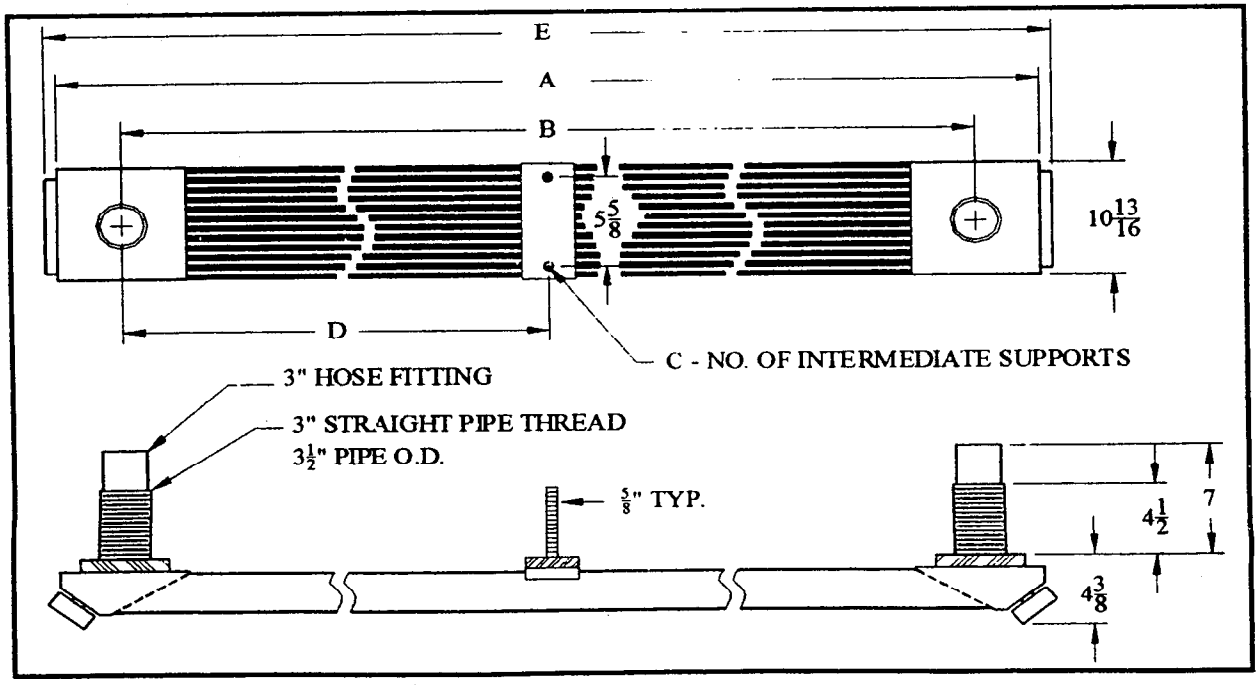

00492

Duraweld® Keel Cooler

0014 SERIES
SINGLE PASS

MODEL	A	B	C	D	E
0414	37 1/4	30	--	---	38 5/8
0514	37 1/4	30	--	---	38 5/8
0614	49 1/4	42	--	---	50 5/8
0714	49 1/4	42	--	---	50 5/8
0814	61 1/4	54	--	---	62 5/8
0914	61 1/4	54	--	---	62 5/8
1014	73 1/4	66	--	---	74 5/8
1114	73 1/4	66	1	33	74 5/8
1214	79 1/4	72	1	36	80 5/8
1314	85 1/4	78	1	39	86 5/8
1414	91 1/4	84	1	42	92 5/8
1514	97 1/4	90	1	45	98 5/8
1614	103 1/4	96	2	32	104 5/8
1714	109 1/4	102	2	34	110 5/8
1814	115 1/4	108	2	36	116 5/8
1914	121 1/4	114	2	38	122 5/8
2014	127 1/4	120	2	40	128 5/8
2214	139 1/4	132	2	44	140 5/8
2414	151 1/4	144	2	48	152 5/8
2614	163 1/4	156	2	52	164 5/8
2814	175 1/4	168	3	42	176 5/8
3014	187 1/4	180	3	45	188 5/8

ALL DIMENSIONS ARE IN INCHES.

MINIMUM HULL RECESS DIMENSIONS FOR DURAWELD KEEL COOLERS:

OVERALL LENGTH + 3 INCHES
OVERALL WIDTH + 3 INCHES

HULL RECESS DIMENSIONS ARE MINIMUM RECESS DIMENSIONS AND DO NOT TAKE INTO CONSIDERATION THE USE OF LARGE ANODE BLOCKS BEING IN THE RECESS.

SPECIFICATIONS ARE SUBJECT TO CHANGE WITHOUT NOTICE.

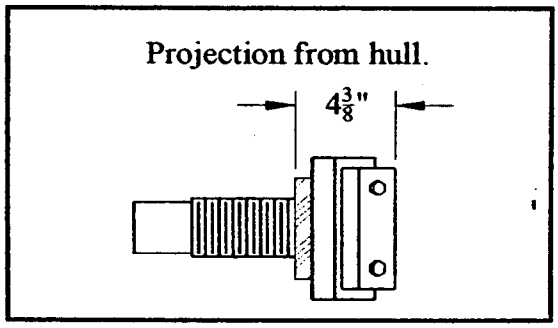

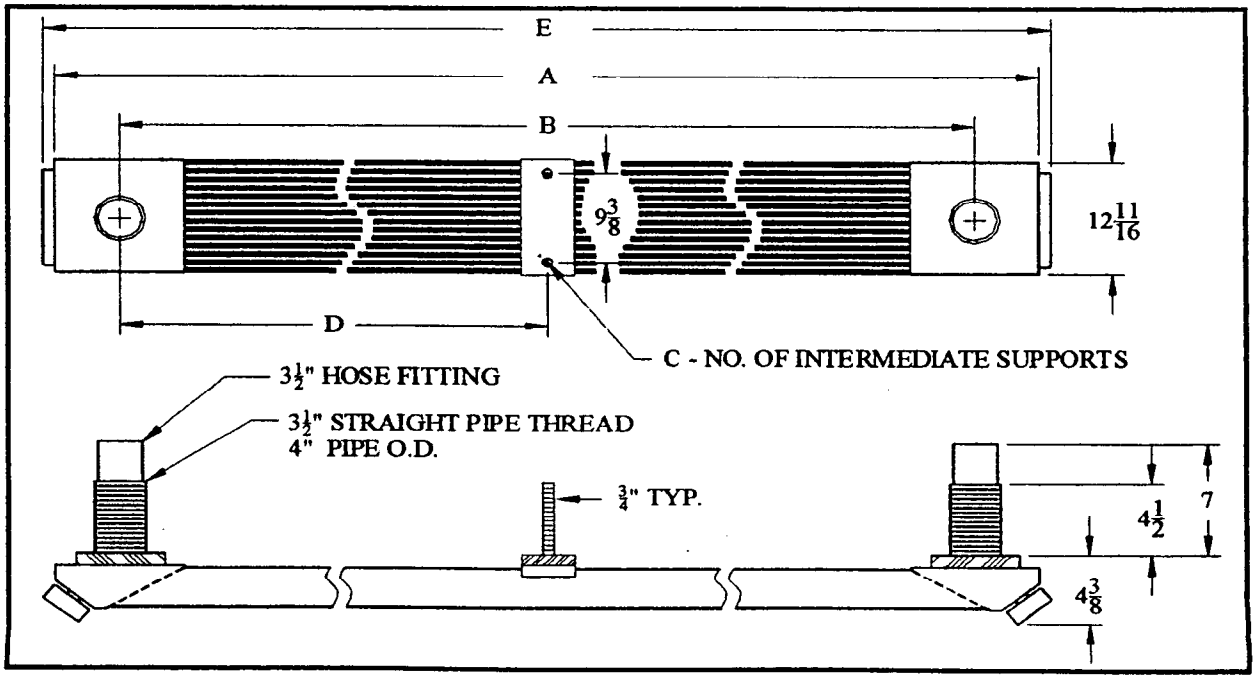

Duraweld® Keel Cooler

0016 SERIES
SINGLE PASS

MODEL	A	B	C	D	E
0416	43 1/4	42	--	---	44 5/8
0516	37 1/4	30	--	---	38 5/8
0616	43 1/4	36	1	17	44 5/8
0716	49 1/4	42	--	---	50 5/8
0816	55 1/4	48	1	24	56 5/8
0916	61 1/4	54	--	---	62 5/8
1016	67 1/4	60	1	30	68 5/8
1116	73 1/4	66	1	33	74 5/8
1216	79 1/4	72	1	36	80 5/8
1316	85 1/4	78	1	39	86 5/8
1416	91 1/4	84	1	42	92 5/8
1516	97 1/4	90	1	45	98 5/8
1616	103 1/4	96	2	32	104 5/8
1716	109 1/4	102	2	34	110 5/8
1816	115 1/4	108	2	36	116 5/8
1916	121 1/4	114	2	38	122 5/8
2016	127 1/4	120	2	40	128 5/8
2216	139 1/4	132	2	44	140 5/8
2416	151 1/4	144	2	48	152 5/8
2616	163 1/4	156	2	52	164 5/8
2816	175 1/4	168	3	42	176 5/8
3016	187 1/4	180	3	45	188 5/8

ALL DIMENSIONS ARE IN INCHES.

MINIMUM HULL RECESS DIMENSIONS FOR DURAWELD KEEL COOLERS:

OVERALL LENGTH + 3 INCHES
OVERALL WIDTH + 3 INCHES

HULL RECESS DIMENSIONS ARE MINIMUM RECESS DIMENSIONS AND DO NOT TAKE INTO CONSIDERATION THE USE OF LARGE ANODE BLOCKS BEING IN THE RECESS.

SPECIFICATIONS ARE SUBJECT TO CHANGE WITHOUT NOTICE.

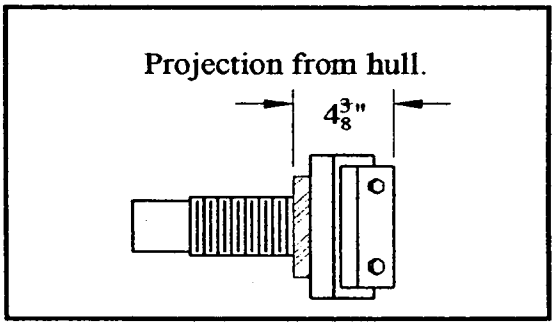

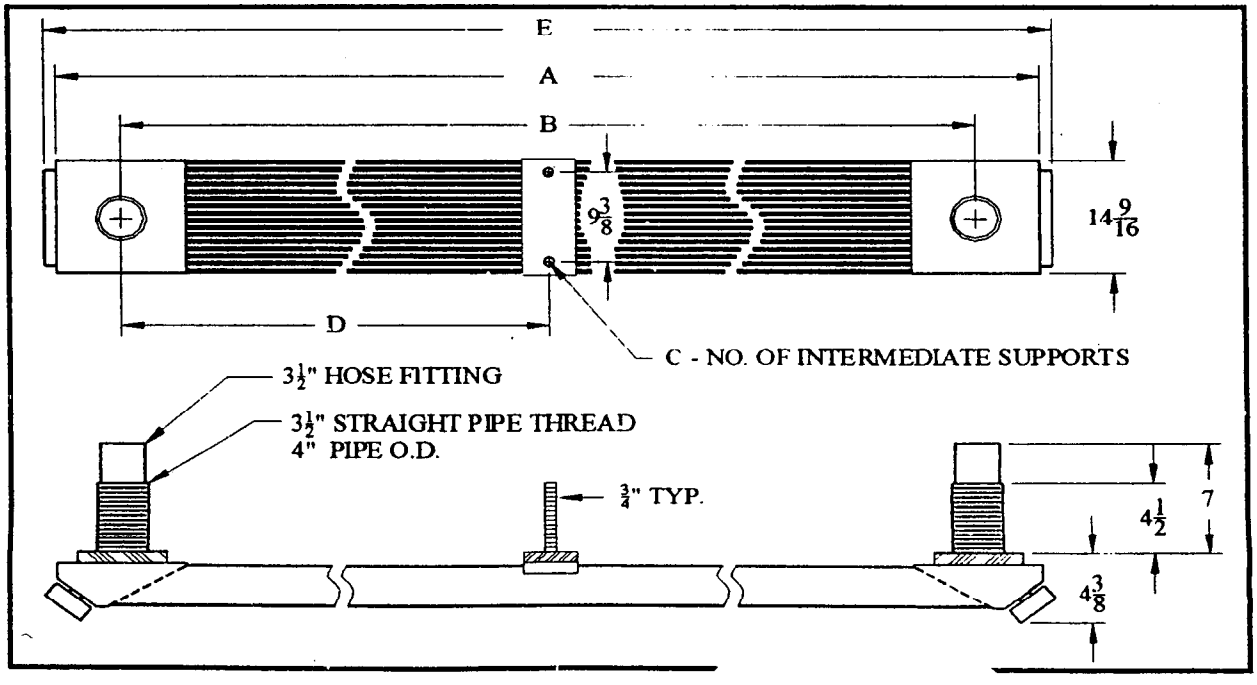

Duraweld® Keel Cooler

0018 SERIES
SINGLE PASS

MODEL	A	B	C	D	E
0418	31 1/4	24	2	5	32 5/8
0518	37 1/4	30	--	---	38 5/8
0618	43 1/4	36	--	---	44 5/8
0718	49 1/4	42	--	---	50 5/8
0818	55 1/4	48	2	7	56 5/8
0918	61 1/4	54	--	---	62 5/8
1018	67 1/4	60	2	7	68 5/8
1118	73 1/4	66	1	33	74 5/8
1218	79 1/4	72	1	36	80 5/8
1318	85 1/4	78	1	39	86 5/8
1418	91 1/4	84	1	42	92 5/8
1518	97 1/4	90	1	45	98 5/8
1618	103 1/4	96	2	32	104 5/8
1718	109 1/4	102	2	34	110 5/8
1818	115 1/4	108	2	36	116 5/8
1918	121 1/4	114	2	38	122 5/8
2018	127 1/4	120	2	40	128 5/8
2218	139 1/4	132	2	44	140 5/8
2418	151 1/4	144	2	48	152 5/8
2618	163 1/4	156	2	52	164 5/8
2818	175 1/4	168	3	42	176 5/8
3018	187 1/4	180	3	45	188 5/8

ALL DIMENSIONS ARE IN INCHES.

MINIMUM HULL RECESS DIMENSIONS FOR DURAWELD KEEL COOLERS:

OVERALL LENGTH + 3 INCHES
OVERALL WIDTH + 3 INCHES

HULL RECESS DIMENSIONS ARE MINIMUM RECESS DIMENSIONS AND DO NOT TAKE INTO CONSIDERATION THE USE OF LARGE ANODE BLOCKS BEING IN THE RECESS.

SPECIFICATIONS ARE SUBJECT TO CHANGE WITHOUT NOTICE.

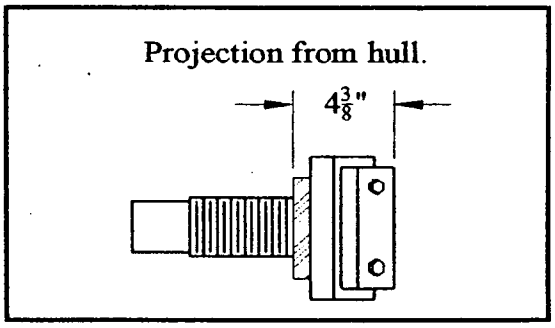

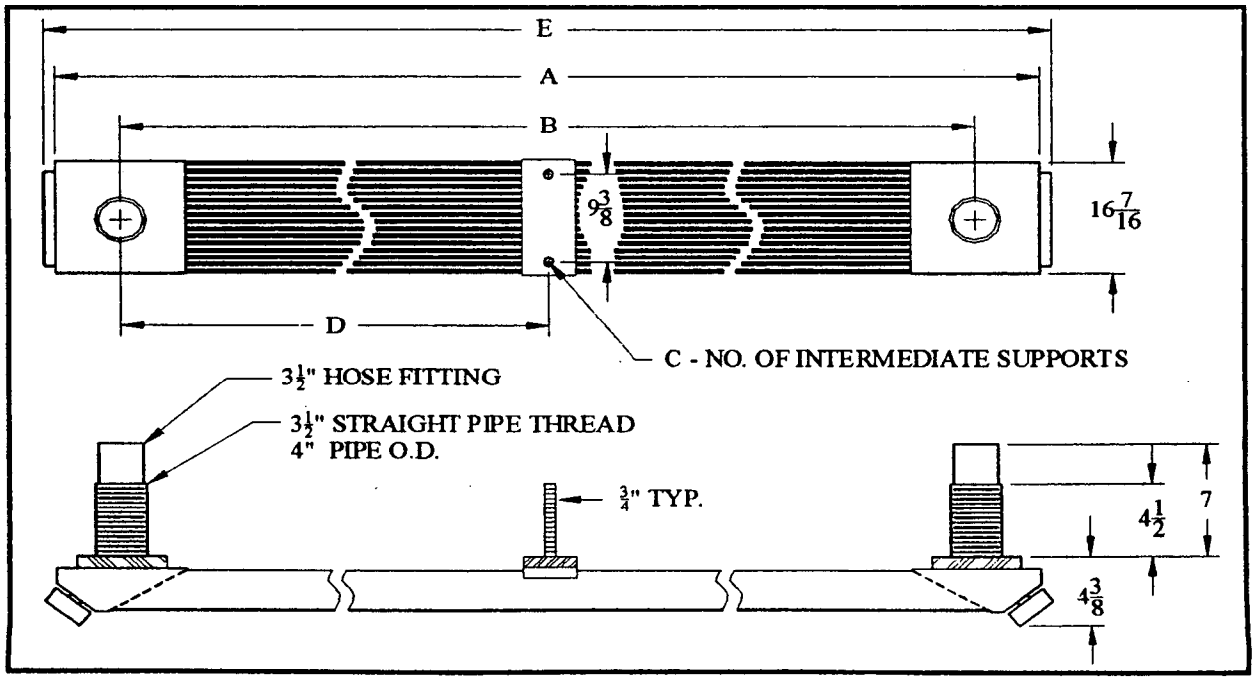

00495

Duraweld® Keel Cooler

0020 SERIES
SINGLE PASS

MODEL	A	B	C	D	E
0420	31 1/4	24	--	---	32 5/8
0520	37 1/4	30	--	---	38 5/8
0620	43 1/4	36	--	---	44 5/8
0720	49 1/4	42	--	---	50 5/8
0820	55 1/4	48	--	---	56 5/8
0920	61 1/4	54	--	---	62 5/8
1020	67 1/4	60	1	27	68 5/8
1120	73 1/4	66	1	33	74 5/8
1220	79 1/4	72	1	36	80 5/8
1320	85 1/4	78	1	39	86 5/8
1420	91 1/4	84	1	42	92 5/8
1520	97 1/4	90	1	45	98 5/8
1620	103 1/4	96	2	32	104 5/8
1720	109 1/4	102	2	34	110 5/8
1820	115 1/4	108	2	36	116 5/8
1920	121 1/4	114	2	38	122 5/8
2020	127 1/4	120	2	40	128 5/8
2220	139 1/4	132	2	44	140 5/8
2420	151 1/4	144	2	48	152 5/8
2620	163 1/4	156	2	52	164 5/8
2820	175 1/4	168	3	42	176 5/8
3020	187 1/4	180	3	45	188 5/8

ALL DIMENSIONS ARE IN INCHES.

MINIMUM HULL RECESS DIMENSIONS FOR DURAWELD KEEL COOLERS:

OVERALL LENGTH + 3 INCHES

OVERALL WIDTH + 3 INCHES

HULL RECESS DIMENSIONS ARE MINIMUM RECESS DIMENSIONS AND DO NOT TAKE INTO CONSIDERATION THE USE OF LARGE ANODE BLOCKS BEING IN THE RECESS.

SPECIFICATIONS ARE SUBJECT TO CHANGE WITHOUT NOTICE.

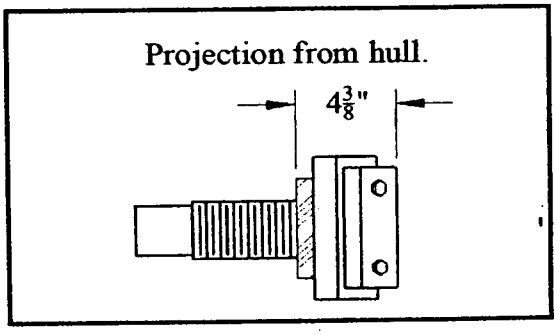

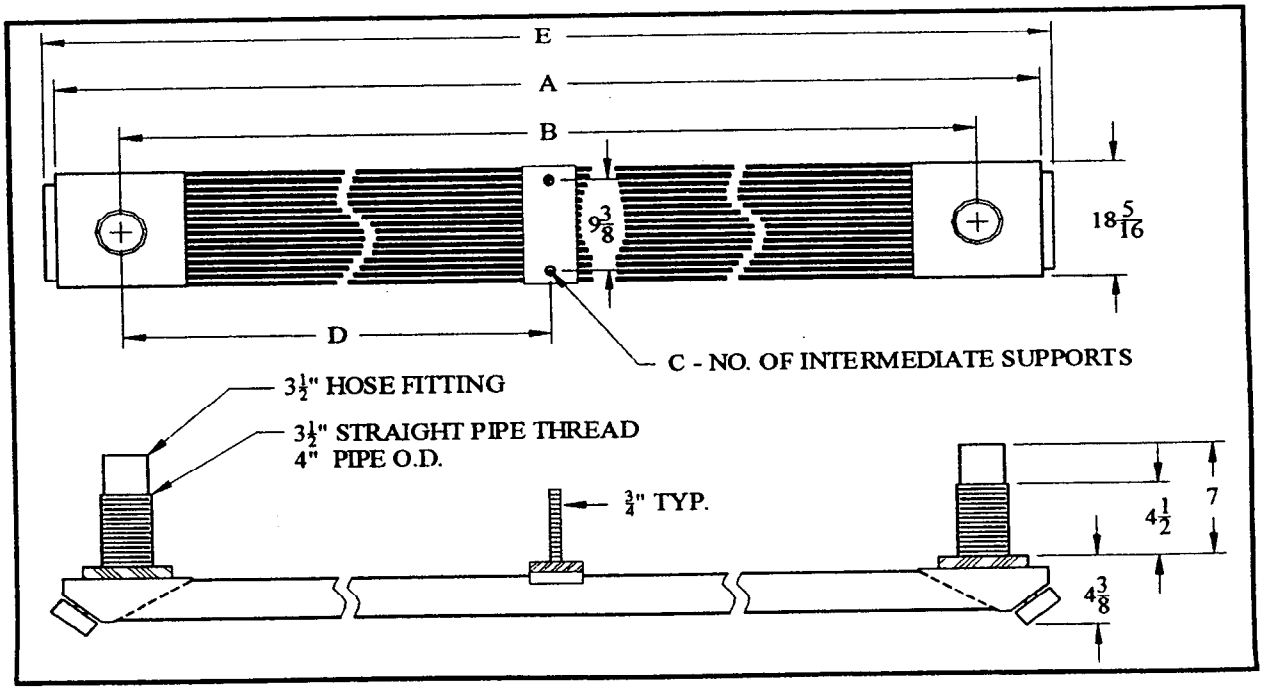

00496

Duraweld® Keel Cooler

0022 SERIES
SINGLE PASS

MODEL	A	B	C	D	E
0422	31 1/4	24	- -	- - -	32 5/8
0522	37 1/4	30	- -	- - -	38 5/8
0622	43 1/4	36	- -	- - -	44 5/8
0722	49 1/4	42	- -	- - -	50 5/8
0822	55 1/4	48	- -	- - -	56 5/8
0922	61 1/4	54	- -	- - -	62 5/8
1022	67 1/4	60	- -	- - -	68 5/8
1122	73 1/4	66	1	33	74 5/8
1222	79 1/4	72	1	36	80 5/8
1322	85 1/4	78	1	39	86 5/8
1422	91 1/4	84	1	42	92 5/8
1522	97 1/4	90	1	45	98 5/8
1622	103 1/4	96	2	32	104 5/8
1722	109 1/4	102	2	34	110 5/8
1822	115 1/4	108	2	36	116 5/8
1922	121 1/4	114	2	38	122 5/8
2022	127 1/4	120	2	40	128 5/8
2222	139 1/4	132	2	44	140 5/8
2422	151 1/4	144	2	48	152 5/8
2622	163 1/4	156	2	52	164 5/8
2822	175 1/4	168	3	42	176 5/8
3022	187 1/4	180	3	45	188 5/8

ALL DIMENSIONS ARE IN INCHES.

MINIMUM HULL RECESS DIMENSIONS FOR DURAWELD KEEL COOLERS:

OVERALL LENGTH + 3 INCHES
OVERALL WIDTH + 3 INCHES

HULL RECESS DIMENSIONS ARE MINIMUM RECESS DIMENSIONS AND DO NOT TAKE INTO CONSIDERATION THE USE OF LARGE ANODE BLOCKS BEING IN THE RECESS.

SPECIFICATIONS ARE SUBJECT TO CHANGE WITHOUT NOTICE.

Projection from hull.

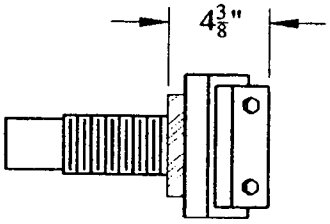

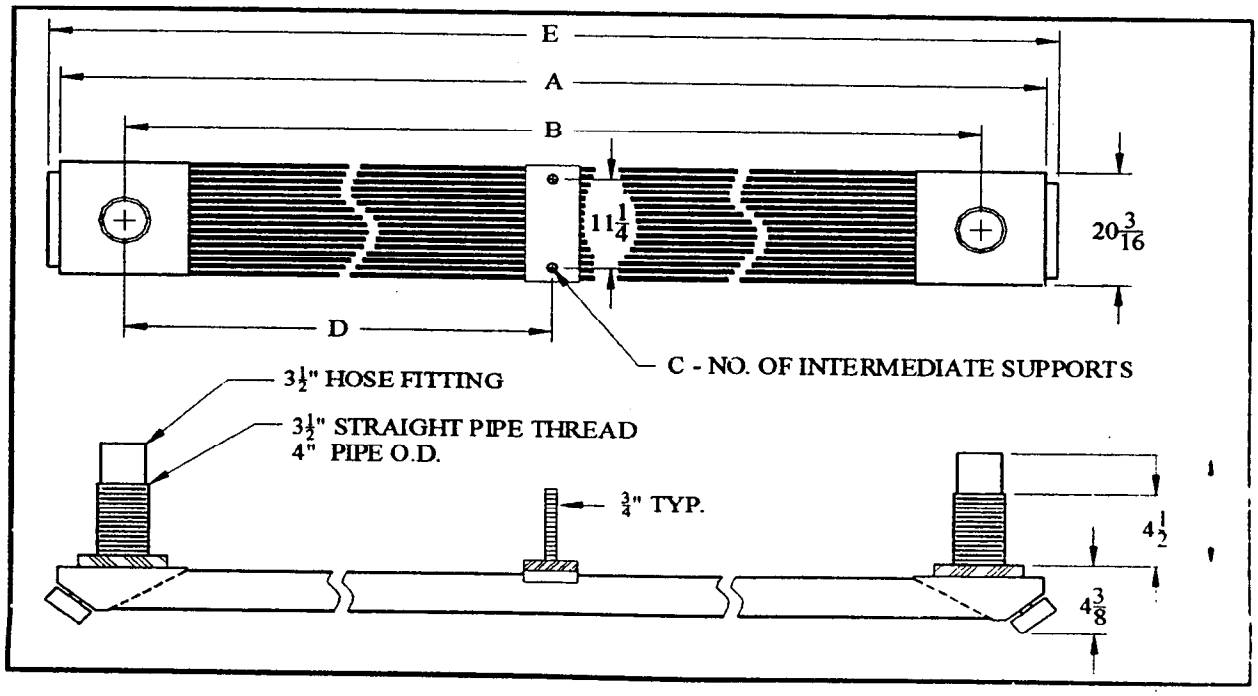

00497

Duraweld® Keel Cooler

0024 SERIES
SINGLE PASS

MODEL	A	B	C	D	E
0424	31 1/4	24	1	12	32 5/8
0524	37 1/4	30	--	---	38 5/8
0624	43 1/4	36	1	18	44 5/8
0724	49 1/4	42	--	---	50 5/8
0824	55 1/4	48	1	24	56 5/8
0924	61 1/4	54	--	---	62 5/8
1024	67 1/4	60	1	30	68 5/8
1124	73 1/4	66	1	33	74 5/8
1224	79 1/4	72	1	36	80 5/8
1324	85 1/4	78	1	39	86 5/8
1424	91 1/4	84	1	42	92 5/8
1524	97 1/4	90	1	45	98 5/8
1624	103 1/4	96	2	32	104 5/8
1724	109 1/4	102	2	34	110 5/8
1824	115 1/4	108	2	36	116 5/8
1924	121 1/4	114	2	38	122 5/8
2024	127 1/4	120	2	40	128 5/8
2224	139 1/4	132	2	44	140 5/8
2424	151 1/4	144	2	48	152 5/8
2624	163 1/4	156	2	52	164 5/8
2824	175 1/4	168	3	42	176 5/8
3024	187 1/4	180	3	45	188 5/8

ALL DIMENSIONS ARE IN INCHES.

MINIMUM HULL RECESS DIMENSIONS FOR DURAWELD KEEL COOLERS:

OVERALL LENGTH + 3 INCHES

OVERALL WIDTH + 3 INCHES

HULL RECESS DIMENSIONS ARE MINIMUM RECESS DIMENSIONS AND DO NOT TAKE INTO CONSIDERATION THE USE OF LARGE ANODE BLOCKS BEING IN THE RECESS.

SPECIFICATIONS ARE SUBJECT TO CHANGE WITHOUT NOTICE.

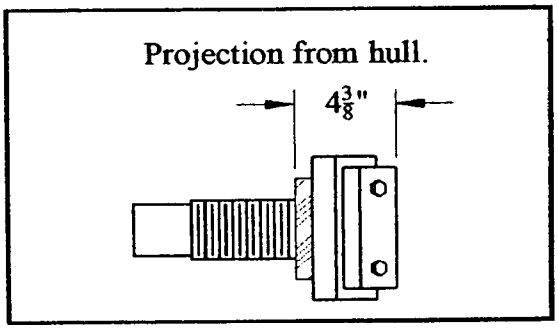

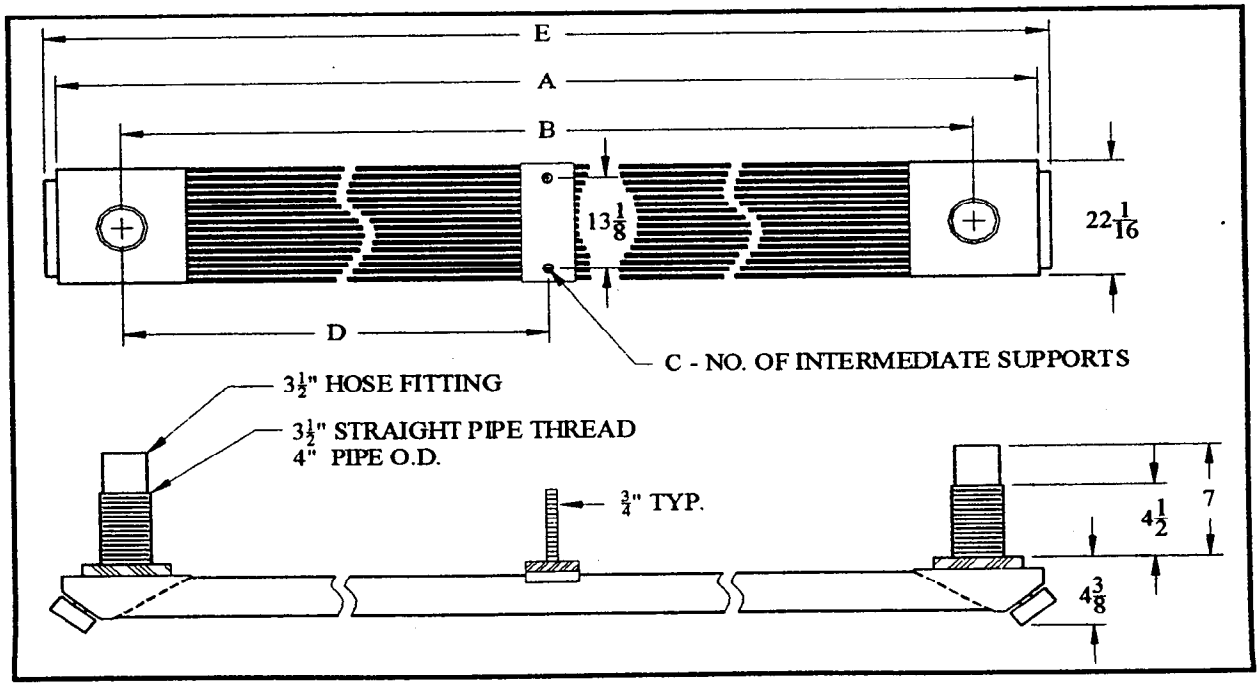

Duraweld® Keel Cooler

0008-2 SERIES
TWO PASS

MODEL	A	B	C	D	E
0408-2	31 1/4	24	- -	- - -	32 5/8
0508-2	37 1/4	30	- -	- - -	38 5/8
0608-2	43 1/4	36	- -	- - -	44 5/8
0708-2	49 1/4	42	- -	- - -	50 5/8
0808-2	55 1/4	48	- -	- - -	56 5/8
0908-2	61 1/4	54	- -	- - -	62 5/8
1008-2	67 1/4	60	- -	- - -	68 5/8
1108-2	73 1/4	66	1	33	74 5/8
1208-2	79 1/4	72	1	36	80 5/8
1308-2	85 1/4	78	1	39	86 5/8
1408-2	91 1/4	84	1	42	92 5/8
1508-2	97 1/4	90	2	30	98 5/8
1608-2	103 1/4	96	2	32	104 5/8
1708-2	109 1/4	102	2	34	110 5/8
1808-2	115 1/4	108	2	36	116 5/8
1908-2	121 1/4	114	2	38	122 5/8
2008-2	127 1/4	120	2	40	128 5/8
2208-2	139 1/4	132	2	44	140 5/8
2408-2	151 1/4	144	2	48	152 5/8
2608-2	163 1/4	156	2	52	164 5/8
2808-2	175 1/4	168	3	42	176 5/8
3008-2	187 1/4	180	3	45	188 5/8

ALL DIMENSIONS ARE IN INCHES.

MINIMUM HULL RECESS DIMENSIONS FOR DURAWELD KEEL COOLERS:
OVERALL LENGTH + 3 INCHES
OVERALL WIDTH + 3 INCHES

HULL RECESS DIMENSIONS ARE MINIMUM RECESS DIMENSIONS AND DO NOT TAKE INTO CONSIDERATION THE USE OF LARGE ANODE BLOCKS BEING IN THE RECESS.

SPECIFICATIONS ARE SUBJECT TO CHANGE WITHOUT NOTICE.

Projection from hull.

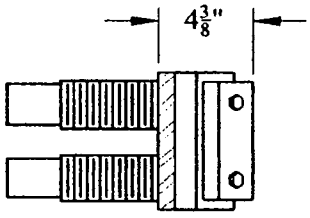

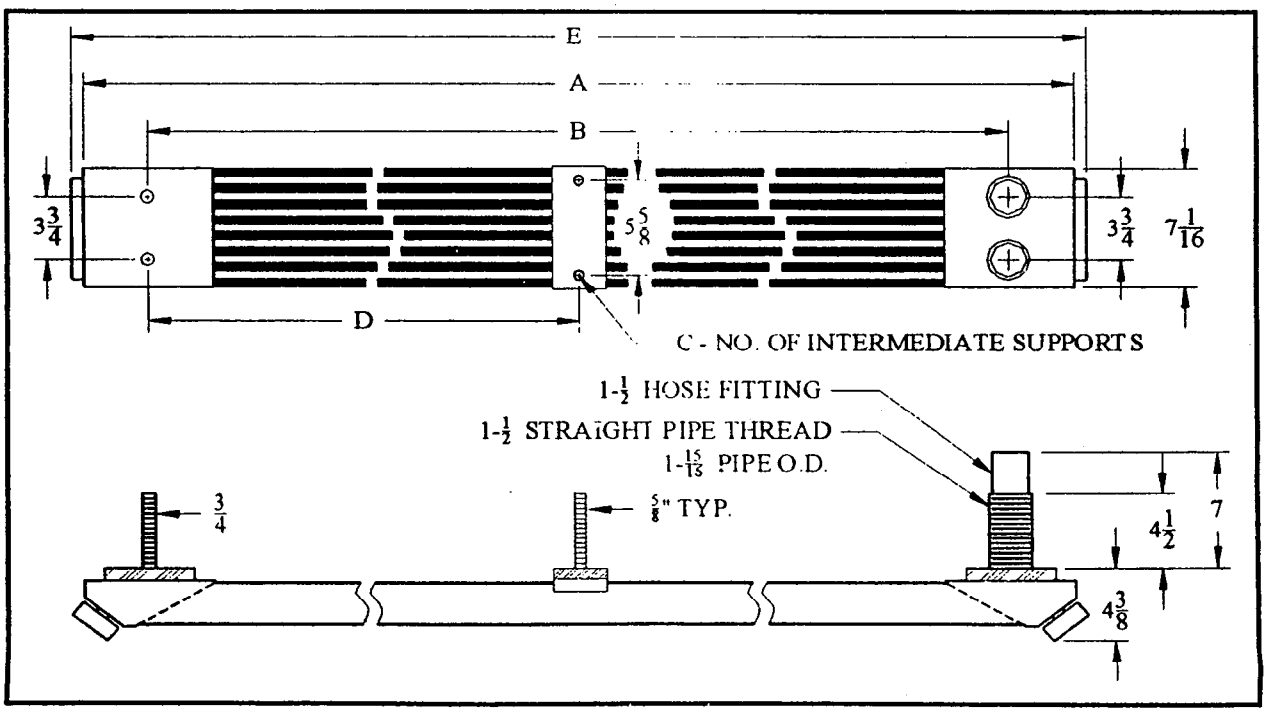

Duraweld® Keel Cooler

0010-2 SERIES
TWO PASS

MODEL	A	B	C	D	E
0410-2	61 1/4	54	--	---	62 5/8
0510-2	37 1/4	30	--	---	38 5/8
0610-2	43 1/4	36	--	---	44 5/8
0710-2	49 1/4	42	--	---	50 5/8
0810-2	55 1/4	48	--	---	56 5/8
0910-2	61 1/4	54	--	---	62 5/8
1010-2	67 1/4	60	1	30	68 5/8
1110-2	73 1/4	66	1	33	74 5/8
1210-2	79 1/4	72	1	36	80 5/8
1310-2	85 1/4	78	1	39	86 5/8
1410-2	91 1/4	84	1	42	92 5/8
1510-2	97 1/4	90	2	30	98 5/8
1610-2	103 1/4	96	2	32	104 5/8
1710-2	109 1/4	102	2	34	110 5/8
1810-2	115 1/4	108	2	36	116 5/8
1910-2	121 1/4	114	2	38	122 5/8
2010-2	127 1/4	120	2	40	128 5/8
2210-2	139 1/4	132	2	44	140 5/8
2410-2	151 1/4	144	2	48	152 5/8
2610-2	163 1/4	156	2	52	164 5/8
2810-2	175 1/4	168	3	42	176 5/8
3010-2	187 1/4	180	3	45	188 5/8

ALL DIMENSIONS ARE IN INCHES.

MINIMUM HULL RECESS DIMENSIONS FOR DURAWELD KEEL COOLERS:
OVERALL LENGTH + 3 INCHES
OVERALL WIDTH + 3 INCHES

HULL RECESS DIMENSIONS ARE MINIMUM RECESS DIMENSIONS AND DO NOT TAKE INTO CONSIDERATION THE USE OF LARGE ANODE BLOCKS BEING IN THE RECESS.

SPECIFICATIONS ARE SUBJECT TO CHANGE WITHOUT NOTICE.

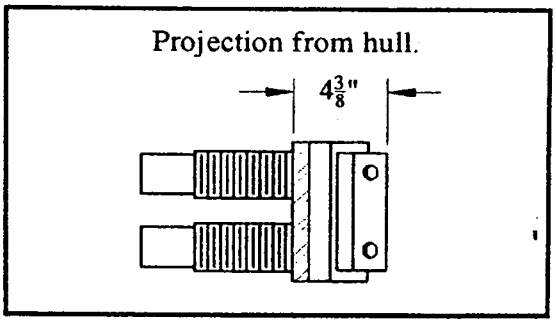

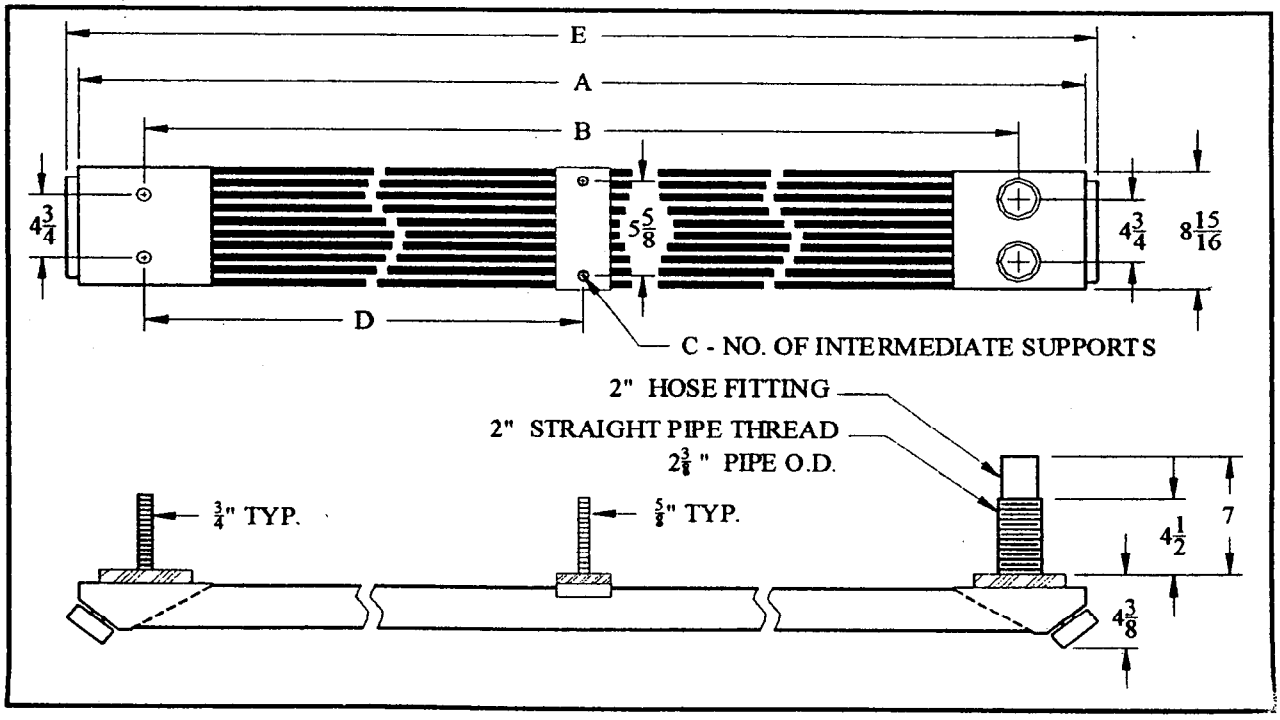

Duraweld® Keel Cooler

0012-2 SERIES
TWO PASS

MODEL	A	B	C	D	E
0412-2	37 1/4	30	--	---	38 5/8
0512-2	49 1/4	42	--	---	50 5/8
0612-2	61 1/4	54	--	---	62 5/8
0712-2	73 1/4	66	1	33	74 5/8
0812-2	85 1/4	78	1	39	86 5/8
0912-2	97 1/4	90	2	30	98 5/8
1012-2	109 1/4	102	2	34	110 5/8
1112-2	121 1/4	114	2	38	122 5/8
1212-2	133 1/4	126	2	42	134 5/8
1312-2	145 1/4	138	2	46	146 5/8
1412-2	157 1/4	150	2	50	158 5/8
1512-2	169 1/4	162	2	54	170 5/8
1612-2	181 1/4	174	2	58	182 5/8
1712-2	193 1/4	186	2	62	194 5/8
1812-2	205 1/4	198	2	66	206 5/8
1912-2	217 1/4	210	2	70	218 5/8
2012-2	229 1/4	222	2	74	230 5/8
2212-2	253 1/4	246	2	82	254 5/8
2412-2	277 1/4	270	2	90	278 5/8
2612-2	301 1/4	294	2	98	302 5/8
2812-2	325 1/4	318	3	106	326 5/8
3012-2	349 1/4	342	3	114	350 5/8

ALL DIMENSIONS ARE IN INCHES.

MINIMUM HULL RECESS DIMENSIONS FOR DURAWELD KEEL COOLERS:
- OVERALL LENGTH + 3 INCHES
- OVERALL WIDTH + 3 INCHES

HULL RECESS DIMENSIONS ARE MINIMUM RECESS DIMENSIONS AND DO NOT TAKE INTO CONSIDERATION THE USE OF LARGE ANODE BLOCKS BEING IN THE RECESS.

SPECIFICATIONS ARE SUBJECT TO CHANGE WITHOUT NOTICE.

Projection from hull.

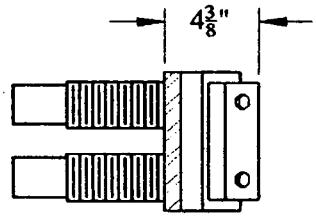

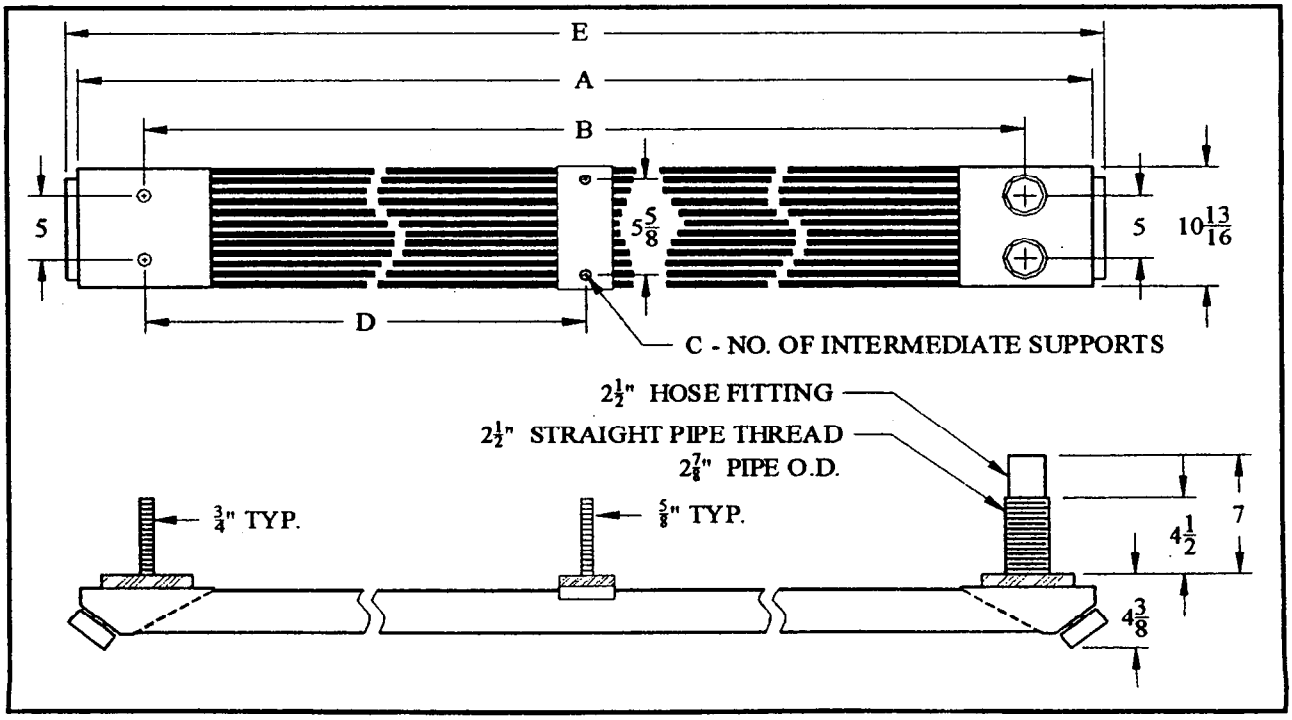

00501

Duraweld® Keel Cooler

0014-2 SERIES
TWO PASS

MODEL	A	B	C	D	E
0414-2	31 1/4	24	--	---	32 5/8
0514-2	37 1/4	30	--	---	38 5/8
0614-2	43 1/4	36	--	---	44 5/8
0714-2	49 1/4	42	--	---	50 5/8
0814-2	55 1/4	48	--	---	56 5/8
0914-2	61 1/4	54	--	---	62 5/8
1014-2	67 1/4	60	1	30	68 5/8
1114-2	73 1/4	66	1	33	74 5/8
1214-2	79 1/4	72	1	36	80 5/8
1314-2	85 1/4	78	1	39	86 5/8
1414-2	91 1/4	84	1	42	92 5/8
1514-2	97 1/4	90	1	45	98 5/8
1614-2	103 1/4	96	2	32	104 5/8
1714-2	109 1/4	102	2	34	110 5/8
1814-2	115 1/4	108	2	36	116 5/8
1914-2	121 1/4	114	2	38	122 5/8
2014-2	127 1/4	120	2	40	128 5/8
2214-2	139 1/4	132	2	44	140 5/8
2414-2	151 1/4	144	2	48	152 5/8
2614-2	163 1/4	156	2	52	164 5/8
2814-2	175 1/4	168	3	42	176 5/8
3014-2	187 1/4	180	3	45	188 5/8

ALL DIMENSIONS ARE IN INCHES.

MINIMUM HULL RECESS DIMENSIONS FOR DURAWELD KEEL COOLERS:

OVERALL LENGTH + 3 INCHES
OVERALL WIDTH + 3 INCHES

HULL RECESS DIMENSIONS ARE MINIMUM RECESS DIMENSIONS AND DO NOT TAKE INTO CONSIDERATION THE USE OF LARGE ANODE BLOCKS BEING IN THE RECESS.

SPECIFICATIONS ARE SUBJECT TO CHANGE WITHOUT NOTICE.

Projection from hull.

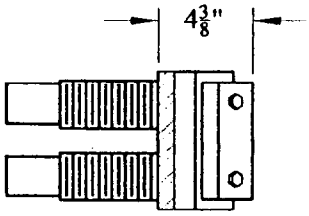

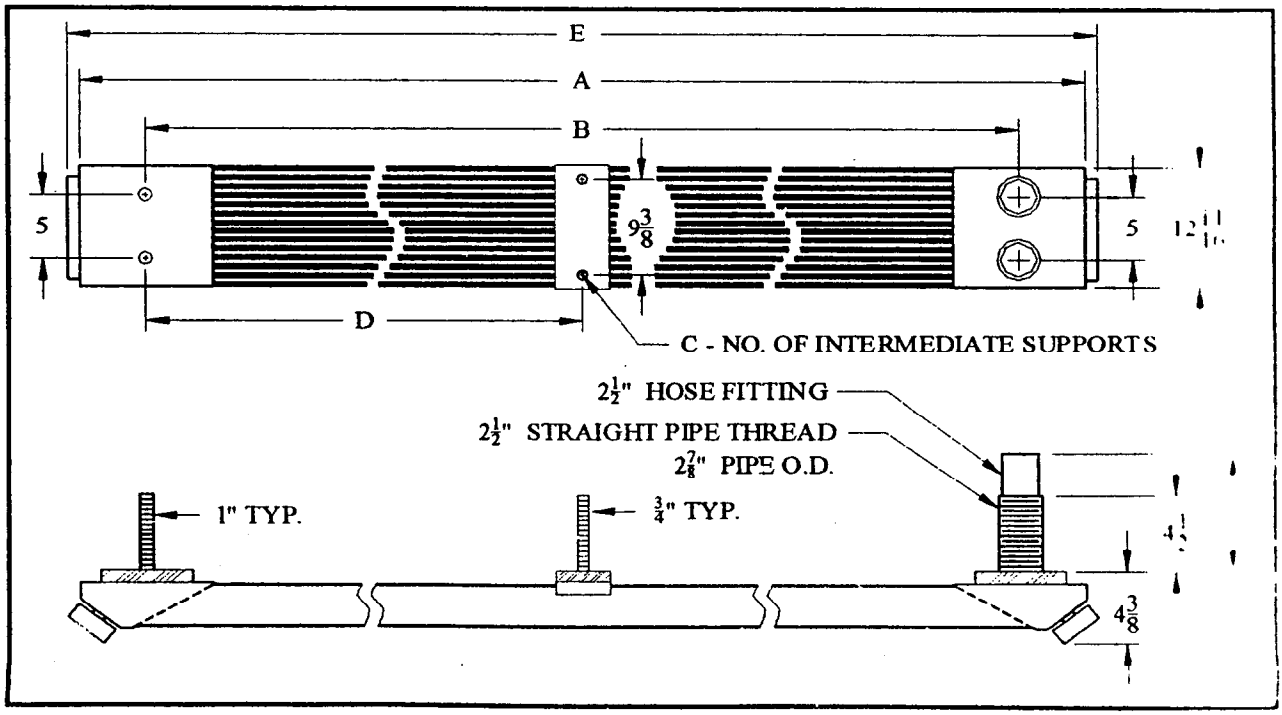

00502

Duraweld® Keel Cooler

0016-2 SERIES
TWO PASS

MODEL	A	B	C	D	E
0416-2	31 1/4	24	1	27	32 5/8
0516-2	37 1/4	30	--	---	38 5/8
0616-2	43 1/4	36	1	27	44 5/8
0716-2	49 1/4	42	--	---	50 5/8
0816-2	55 1/4	48	1	27	56 5/8
0916-2	61 1/4	54	--	---	62 5/8
1016-2	67 1/4	60	1	33	68 5/8
1116-2	73 1/4	66	1	33	74 5/8
1216-2	79 1/4	72	1	36	80 5/8
1316-2	85 1/4	78	1	39	86 5/8
1416-2	91 1/4	84	1	42	92 5/8
1516-2	97 1/4	90	1	45	98 5/8
1616-2	103 1/4	96	2	32	104 5/8
1716-2	109 1/4	102	2	34	110 5/8
1816-2	115 1/4	108	2	36	116 5/8
1916-2	121 1/4	114	2	38	122 5/8
2016-2	127 1/4	120	2	40	128 5/8
2216-2	139 1/4	132	2	44	140 5/8
2416-2	151 1/4	144	2	48	152 5/8
2616-2	163 1/4	156	2	52	164 5/8
2816-2	175 1/4	168	2	42	176 5/8
3016-2	187 1/4	180	3	45	188 5/8

ALL DIMENSIONS ARE IN INCHES.

MINIMUM HULL RECESS DIMENSIONS FOR DURAWELD KEEL COOLERS:

OVERALL LENGTH + 3 INCHES
OVERALL WIDTH + 3 INCHES

HULL RECESS DIMENSIONS ARE MINIMUM RECESS DIMENSIONS AND DO NOT TAKE INTO CONSIDERATION THE USE OF LARGE ANODE BLOCKS BEING IN THE RECESS.

SPECIFICATIONS ARE SUBJECT TO CHANGE WITHOUT NOTICE.

Projection from hull.

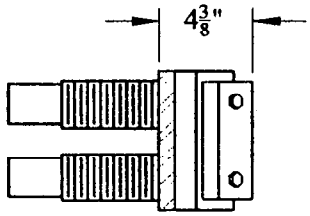

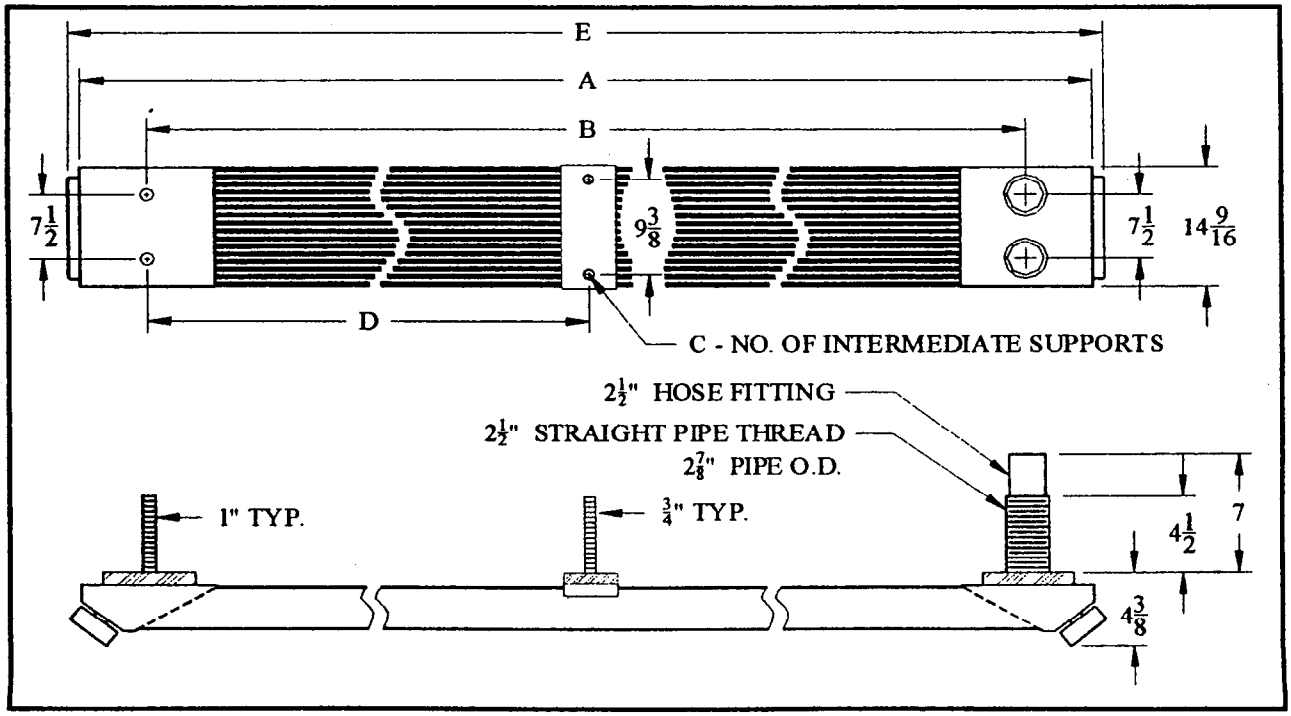

Duraweld® Keel Cooler

0018-2 SERIES
TWO PASS

MODEL	A	B	C	D	E
0418-2	31 1/4	24	--	---	32 5/8
0518-2	37 1/4	30	--	---	38 5/8
0618-2	43 1/4	36	--	---	44 5/8
0718-2	49 1/4	42	--	---	50 5/8
0818-2	55 1/4	48	--	---	56 5/8
0918-2	61 1/4	54	--	---	62 5/8
1018-2	67 1/4	60	1	27	68 5/8
1118-2	73 1/4	66	1	33	74 5/8
1218-2	79 1/4	72	1	36	80 5/8
1318-2	85 1/4	78	1	39	86 5/8
1418-2	91 1/4	84	1	42	92 5/8
1518-2	97 1/4	90	1	45	98 5/8
1618-2	103 1/4	96	2	32	104 5/8
1718-2	109 1/4	102	2	34	110 5/8
1818-2	115 1/4	108	2	36	116 5/8
1918-2	121 1/4	114	2	38	122 5/8
2018-2	127 1/4	120	2	40	128 5/8
2218-2	139 1/4	132	2	44	140 5/8
2418-2	151 1/4	144	2	48	152 5/8
2618-2	163 1/4	156	2	52	164 5/8
2818-2	175 1/4	168	3	42	176 5/8
3018-2	187 1/4	180	3	45	188 5/8

ALL DIMENSIONS ARE IN INCHES.

MINIMUM HULL RECESS DIMENSIONS FOR DURAWELD KEEL COOLERS:
OVERALL LENGTH + 3 INCHES
OVERALL WIDTH + 3 INCHES

HULL RECESS DIMENSIONS ARE MINIMUM RECESS DIMENSIONS AND DO NOT TAKE INTO CONSIDERATION THE USE OF LARGE ANODE BLOCKS BEING IN THE RECESS.

SPECIFICATIONS ARE SUBJECT TO CHANGE WITHOUT NOTICE.

Projection from hull.

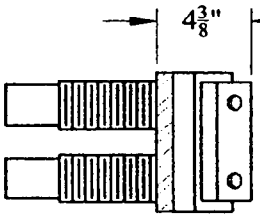

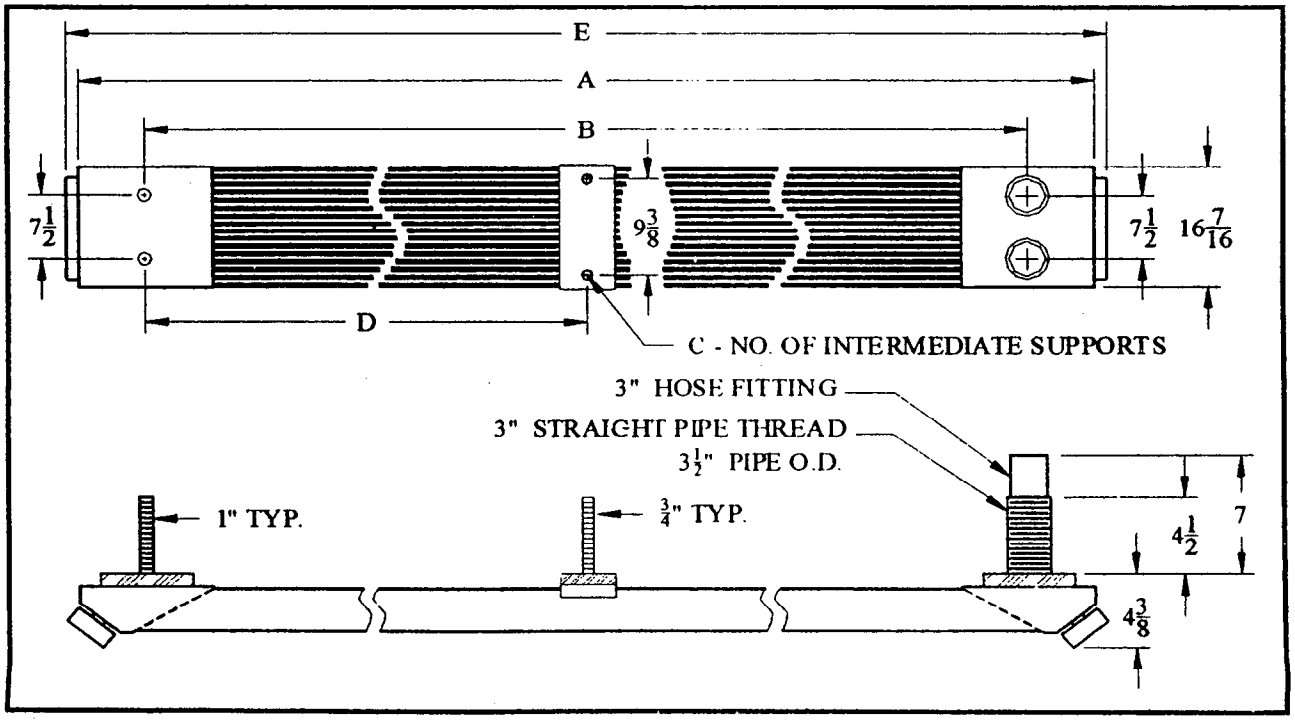

00504

Duraweld® Keel Cooler

0020-2 SERIES
TWO PASS

MODEL	A	B	C	D	E
0420-2	31 1/4	24	1	12	32 5/8
0520-2	37 1/4	30	--	---	38 5/8
0620-2	43 1/4	36	1	18	44 5/8
0720-2	49 1/4	42	--	---	50 5/8
0820-2	55 1/4	48	2	24	56 5/8
0920-2	61 1/4	54	--	---	62 5/8
1020-2	67 1/4	60	2	30	68 5/8
1120-2	73 1/4	66	1	33	74 5/8
1220-2	79 1/4	72	2	36	80 5/8
1320-2	85 1/4	78	1	39	86 5/8
1420-2	91 1/4	84	2	42	92 5/8
1520-2	97 1/4	90	1	45	98 5/8
1620-2	103 1/4	96	2	62	104 5/8
1720-2	109 1/4	102	2	34	110 5/8
1820-2	115 1/4	108	2	36	116 5/8
1920-2	121 1/4	114	2	38	122 5/8
2020-2	127 1/4	120	2	40	128 5/8
2220-2	139 1/4	132	2	44	140 5/8
2420-2	151 1/4	144	2	48	152 5/8
2620-2	163 1/4	156	2	52	164 5/8
2820-2	175 1/4	168	3	42	176 5/8
3020-2	187 1/4	180	3	45	188 5/8

ALL DIMENSIONS ARE IN INCHES.

MINIMUM HULL RECESS DIMENSIONS FOR DURAWELD KEEL COOLERS:
- OVERALL LENGTH + 3 INCHES
- OVERALL WIDTH + 3 INCHES

HULL RECESS DIMENSIONS ARE MINIMUM RECESS DIMENSIONS AND DO NOT TAKE INTO CONSIDERATION THE USE OF LARGE ANODE BLOCKS BEING IN THE RECESS.

SPECIFICATIONS ARE SUBJECT TO CHANGE WITHOUT NOTICE.

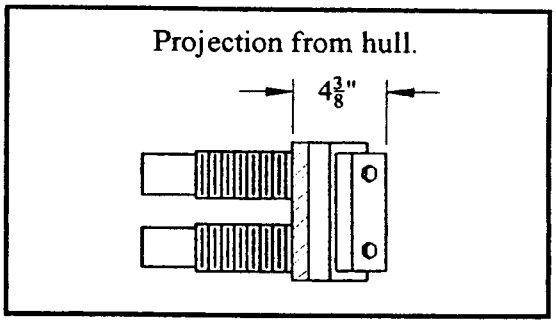

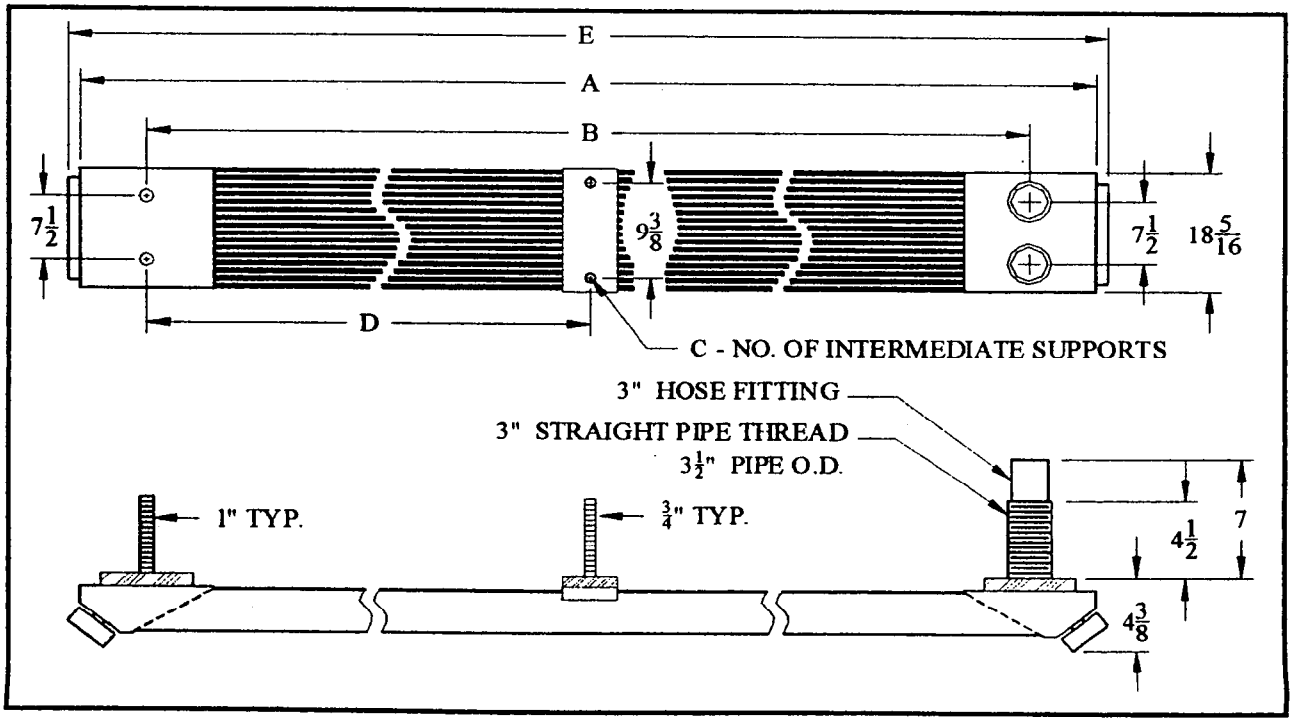

Duraweld® Keel Cooler

0022-2 SERIES
TWO PASS

MODEL	A	B	C	D	E
0422-2	31 1/4	24	--	---	32 5/8
0522-2	37 1/4	30	--	---	38 5/8
0622-2	43 1/4	36	--	---	44 5/8
0722-2	49 1/4	42	--	---	50 5/8
0822-2	55 1/4	48	--	---	56 5/8
0922-2	61 1/4	54	--	---	62 5/8
1022-2	67 1/4	60	--	---	68 5/8
1122-2	73 1/4	66	1	33	74 5/8
1222-2	79 1/4	72	1	36	80 5/8
1322-2	85 1/4	78	1	39	86 5/8
1422-2	91 1/4	84	1	42	92 5/8
1522-2	97 1/4	90	1	45	98 5/8
1622-2	103 1/4	96	2	32	104 5/8
1722-2	109 1/4	102	2	34	110 5/8
1822-2	115 1/4	108	2	36	116 5/8
1922-2	121 1/4	114	2	38	122 5/8
2022-2	127 1/4	120	2	40	128 5/8
2222-2	139 1/4	132	2	44	140 5/8
2422-2	151 1/4	144	2	48	152 5/8
2622-2	163 1/4	156	2	52	164 5/8
2822-2	175 1/4	168	3	42	176 5/8
3022-2	187 1/4	180	3	45	188 5/8

ALL DIMENSIONS ARE IN INCHES.

MINIMUM HULL RECESS DIMENSIONS FOR DURAWELD KEEL COOLERS:

OVERALL LENGTH + 3 INCHES
OVERALL WIDTH + 3 INCHES

HULL RECESS DIMENSIONS ARE MINIMUM RECESS DIMENSIONS AND DO NOT TAKE INTO CONSIDERATION THE USE OF LARGE ANODE BLOCKS BEING IN THE RECESS.

SPECIFICATIONS ARE SUBJECT TO CHANGE WITHOUT NOTICE.

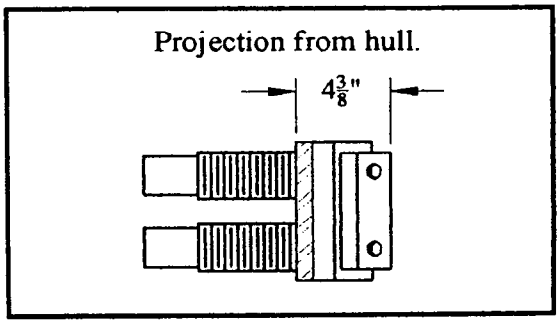

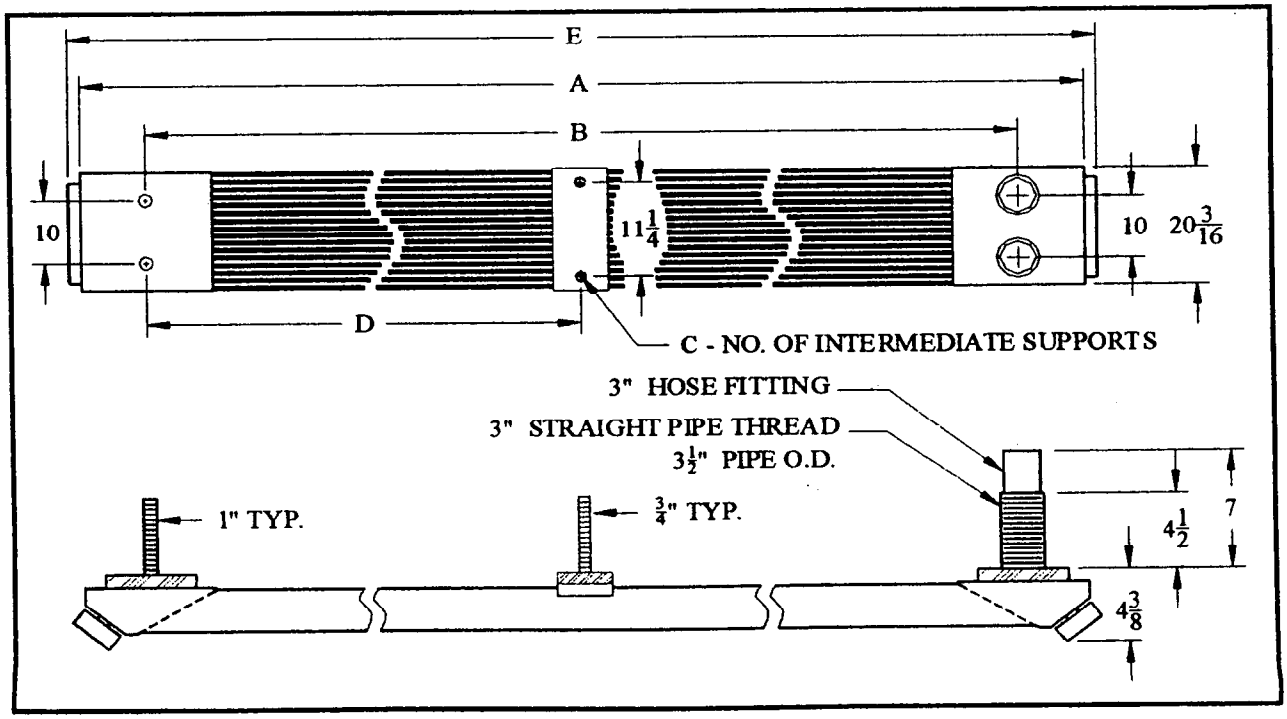

00506

Duraweld® Keel Cooler

0024-2 SERIES
TWO PASS

MODEL	A	B	C	D	E
0424-2	31 1/4	24	--	---	32 5/8
0524-2	37 1/4	30	--	---	38 5/8
0624-2	43 1/4	36	--	---	44 5/8
0724-2	49 1/4	42	--	---	50 5/8
0824-2	55 1/4	48	--	---	56 5/8
0924-2	61 1/4	54	--	---	62 5/8
1024-2	67 1/4	60	--	---	68 5/8
1124-2	73 1/4	66	1	33	74 5/8
1224-2	79 1/4	72	1	36	80 5/8
1324-2	85 1/4	78	1	39	86 5/8
1424-2	91 1/4	84	1	42	92 5/8
1524-2	97 1/4	90	1	45	98 5/8
1624-2	103 1/4	96	2	32	104 5/8
1724-2	109 1/4	102	2	34	110 5/8
1824-2	115 1/4	108	2	36	116 5/8
1924-2	121 1/4	114	2	38	122 5/8
2024-2	127 1/4	120	2	40	128 5/8
2224-2	139 1/4	132	2	44	140 5/8
2424-2	151 1/4	144	2	48	152 5/8
2624-2	163 1/4	156	2	52	164 5/8
2824-2	175 1/4	168	3	42	176 5/8
3024-2	187 1/4	180	3	45	188 5/8

ALL DIMENSIONS ARE IN INCHES.

MINIMUM HULL RECESS DIMENSIONS FOR DURAWELD KEEL COOLERS:

OVERALL LENGTH + 3 INCHES
OVERALL WIDTH + 3 INCHES

HULL RECESS DIMENSIONS ARE MINIMUM RECESS DIMENSIONS AND DO NOT TAKE INTO CONSIDERATION THE USE OF LARGE ANODE BLOCKS BEING IN THE RECESS.

SPECIFICATIONS ARE SUBJECT TO CHANGE WITHOUT NOTICE.

Projection from hull.

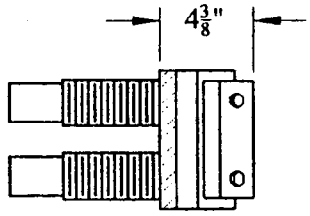

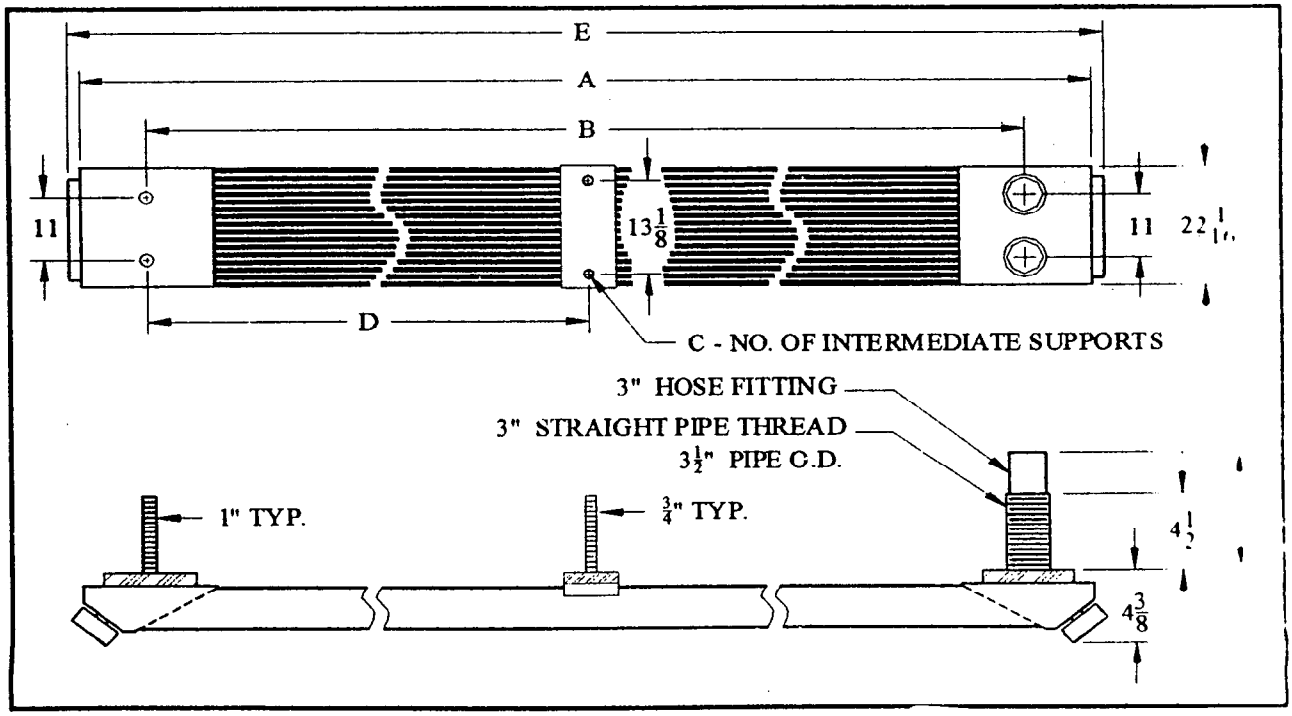

00507

Sales & Services

801 Odette Street
Houma, Louisiana 70363
Telephone: 504-876-3120
504-876-6944
Fax: 504-876-0305

00508

EAST PARK RADIATOR & BATTERY SHOP, INC.

Mission Statement

East Park Radiator is committed to providing impeccable quality and service to its customers through continued research, design and testing of its own products and the other products it services for the marine and oilfield industry.

History

East Park Radiator was started in 1962 as a radiator repair and battery facility. Since its inception, East Park Radiator has evolved into a major repair facility servicing radiators, tube and shell heat exchangers, aftercoolers, inner coolers, air exchanger and keel coolers for the marine and oilfield industry. After years of extensive repair to marine and oilfield heat transfer equipment, East Park Radiator & Battery Shop, Inc. applied its knowledge and experience to the development and manufacturing of its' own keel cooler and replacement tube and shell heat exchangers. East Park Radiator & Battery Shop, Inc. gained insight into the concerns of its customers based on prior equipment failures and used this insight to develop our improved products.

HEAT EXCHANGERS & OIL COOLERS

Service & Repair

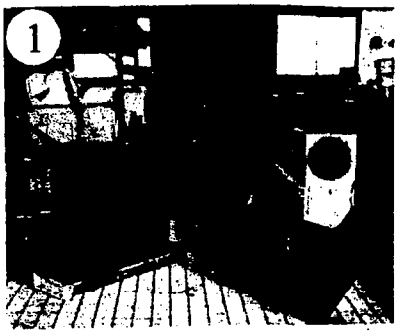

1. EMD accessory rack oil cooler during disassembly.

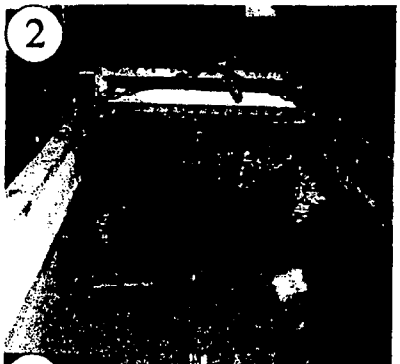

2. EMD accessory rack oil cooler being pressure tested before reassembly.

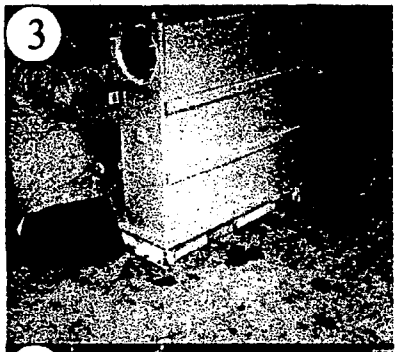

3. EMD accessory rack oil cooler being reassembled.

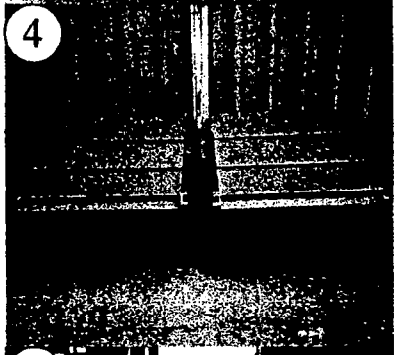

4. EMD accessory rack oil cooler ready for delivery.

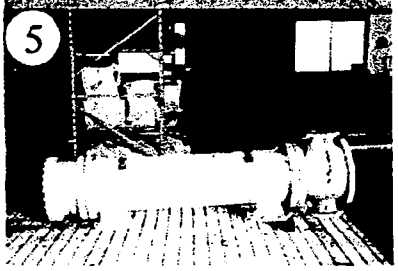

5. EMD 20645E7B jacket water heat exchanger before disassembly.

6. EMD jacket water heat exchanger disassembled.

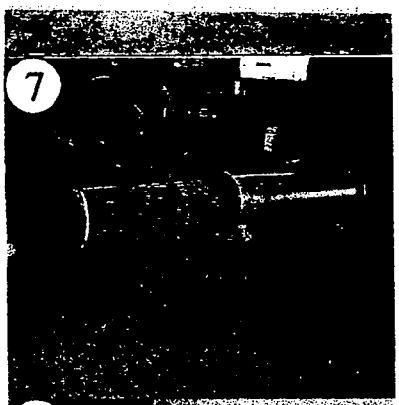

7. EMD jacket water heat exchanger tube bundle being installed into the housing.

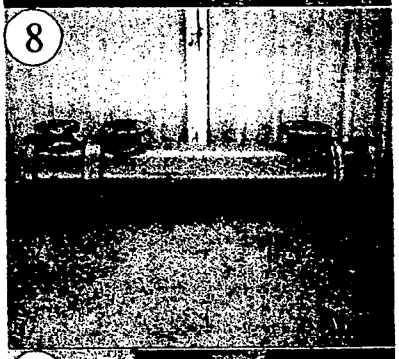

8. EMD jacket water heat exchanger ready for delivery, after being pressure tested and painted.

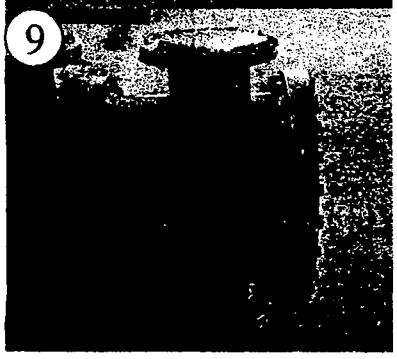

9. Stainless steel inserted inlet/outlet bonnet fabricated to replace original. The original cast iron bonnet was not repairable.

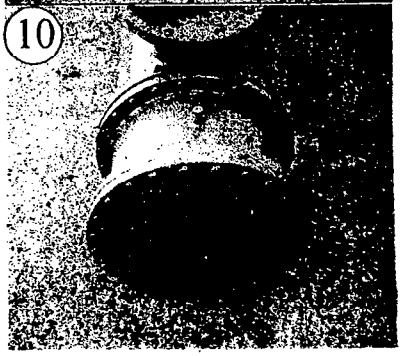

10. Stainless steel inserted return bonnet fabricated to replace the original.

HEAT EXCHANGERS & OIL COOLERS

16645E7B EMD Oil Cooler
(Replaces Young OEM Models)

1. Machined naval brass tubesheets and baffles, ready for tube installation.

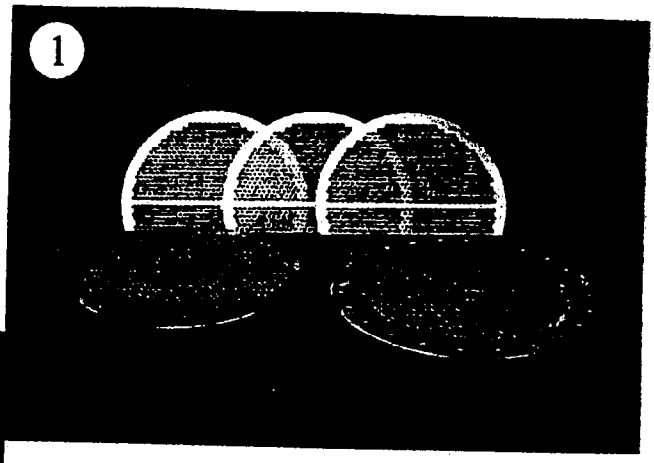

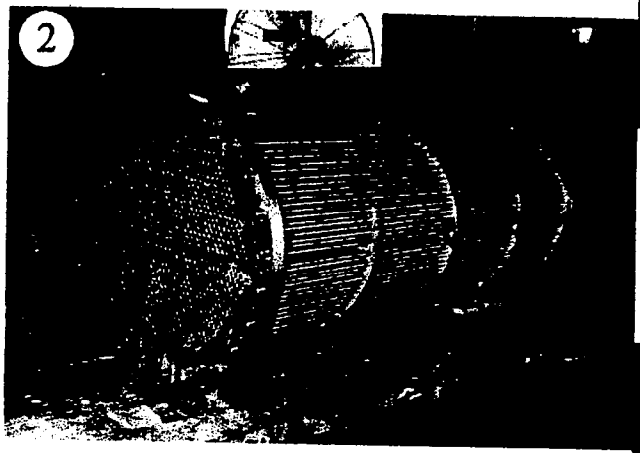

2. Completed tube bundle ready to be installed into housing.

3. Carbon steel housing and end bonnets, that have been sandblasted and coated, waiting for assembly.

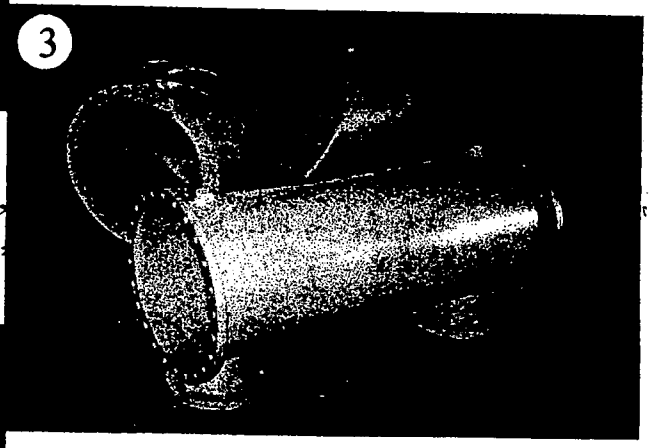

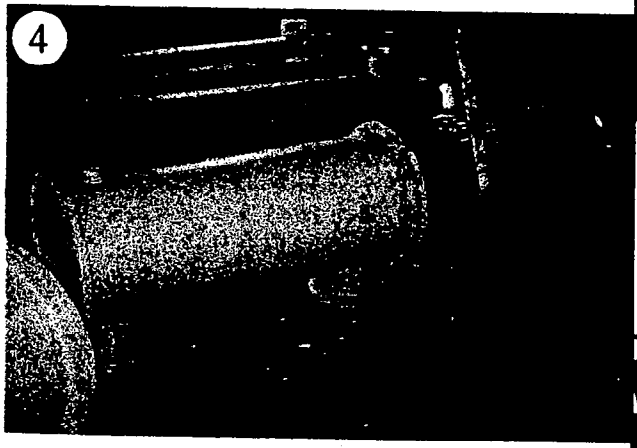

4. Tube bundle being installed into housing.

5. Tube bundle is being pressure tested to verify tubesheet to tube bond integrity.

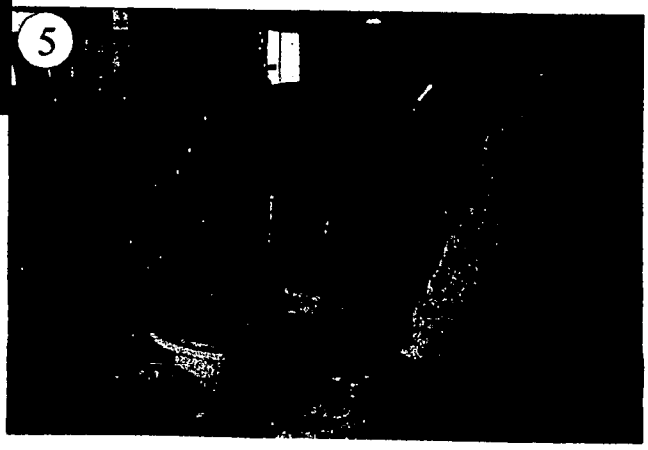

HEAT EXCHANGERS & OIL COOLERS

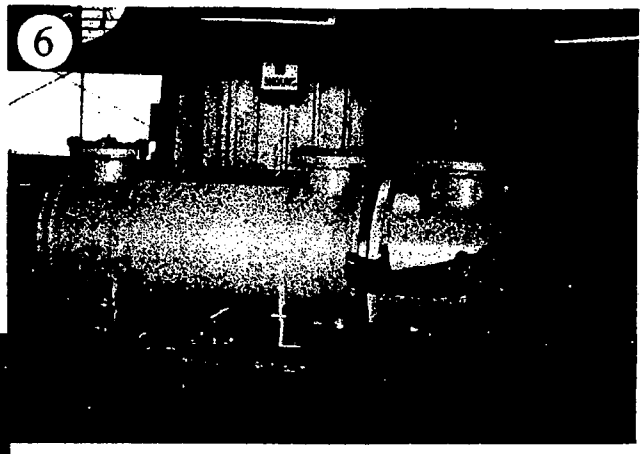

6. Carbon steel end bonnets being assembled.

7. Finalizing assembly.

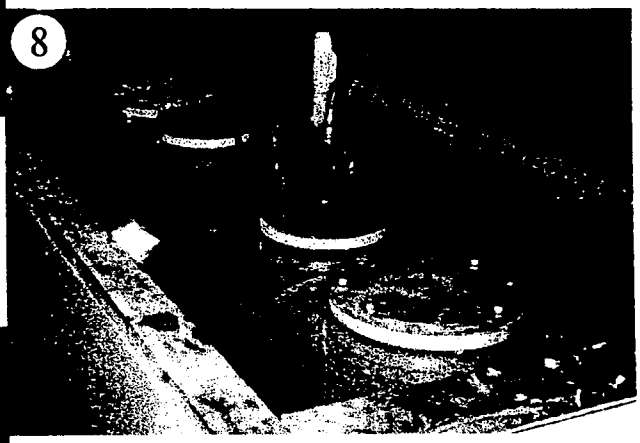

8. Completed oil cooler is being pressure test.

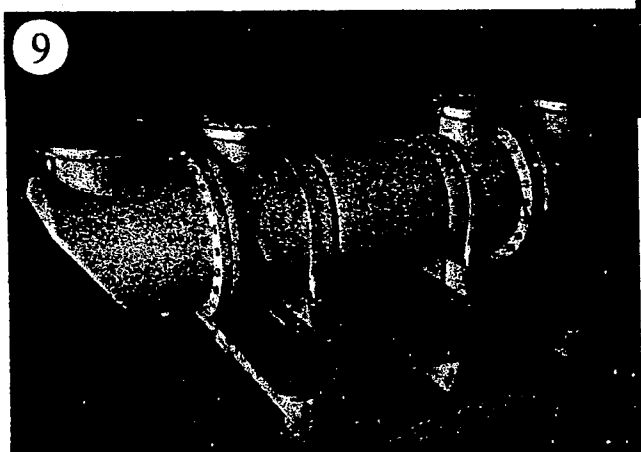

9. Oil cooler ready for delivery.

* 90/10 Copper/Nickel Tubes
* Navel Brass Tubesheets and Baffles
* Rolled Construction
* Carbon Steel and Stainless Steel Housings and End Bonnets
* Carbon Steel Parts Sandblasted and Subsea Coated
* Each Unit Equipped with Cathodic Protection.
* Deliveries on Large Heat Exchangers as soon as 1 week.
* Heat Exchangers Custom Built to Original Specifications. No Piping Changes Necessary.

INNERCOOLERS & AFTERCOOLERS
Service & Repair

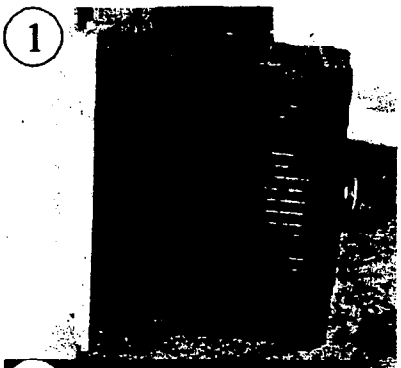

1. Alco aftercooler before servicing.

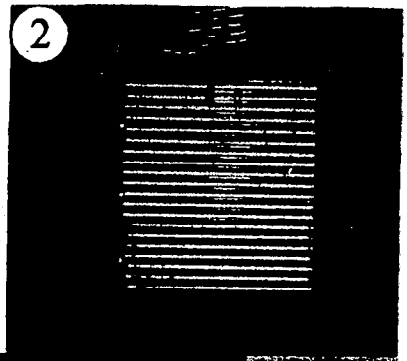

2. Alco aftercooler after having been disassembled, cleaned, repaired, pressure tested and painted.

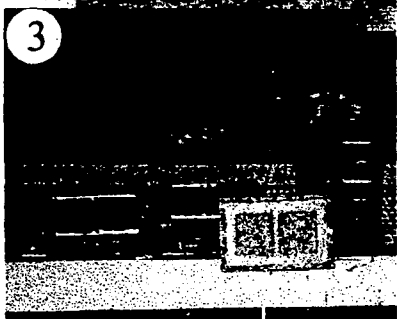

3. 12V71TI Detroit Diesel heat exchanger and innercooler before servicing.

4. 12V71TI Detroit Diesel heat exchanger and innercooler after having been disassembled, cleaned, repaired, pressure tested and painted.

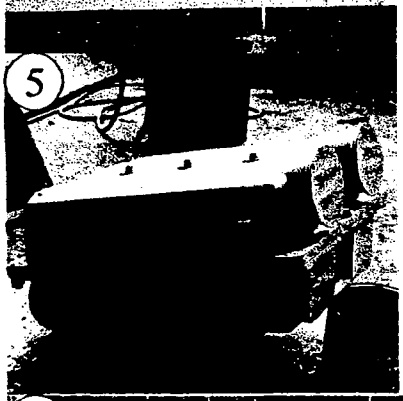

5. Caterpillar aftercooler in the process of being painted.

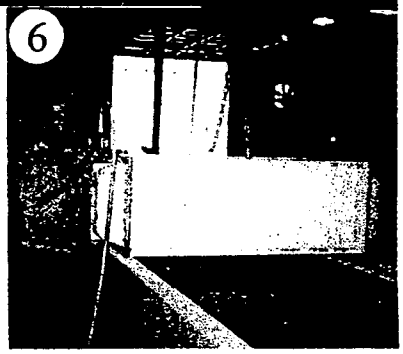

6. Large ship aftercooler in the pressure testing stage, after having been disassembled, cleaned and repaired.

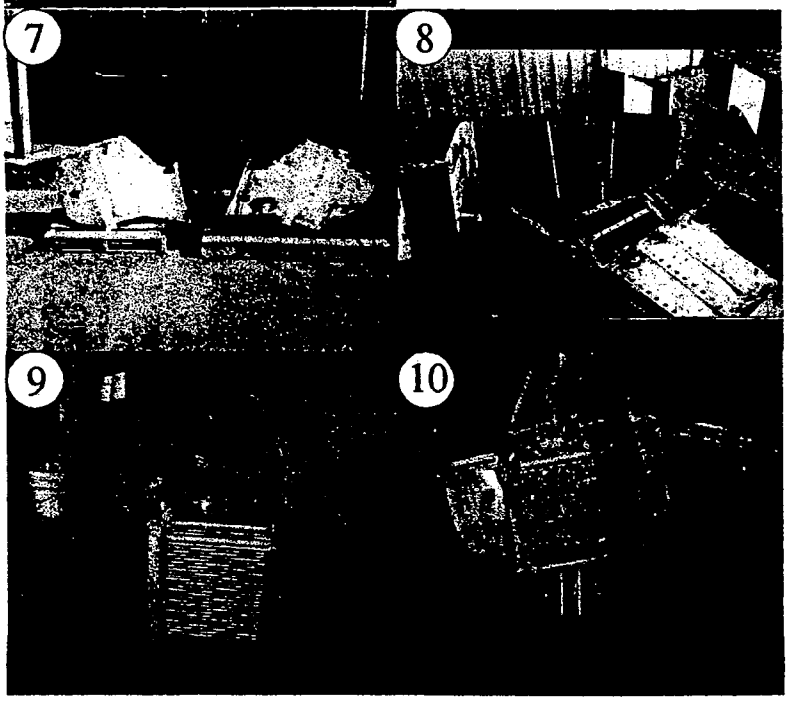

7. EMD aftercooler before.
8. EMD aftercooler after having been disassembled.
9. EMD aftercooler being painted after reassembly, repairing, and pressure testing.
10. EMD in final stages of reassemblying.

NOTE:

We have the capability to fabricate new Carbon Steel or Stainless Steel end bonnets as the need arises.

KEEL COOLERS
Service & Repair

1. Manifold and tube section replaced at a significant savings in cost, to the customer.

BEFORE

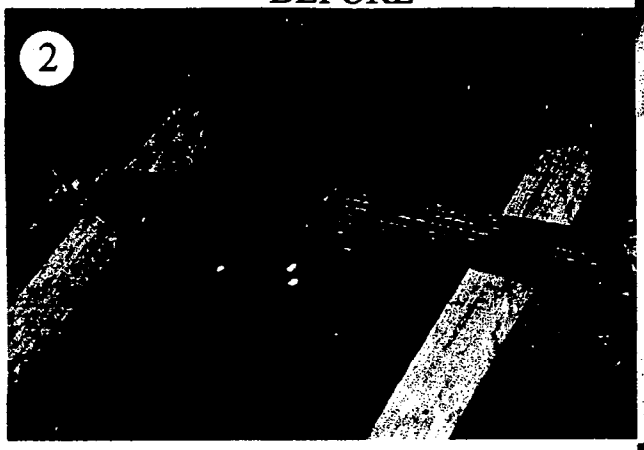

2. Keel cooler bent and damaged.

AFTER

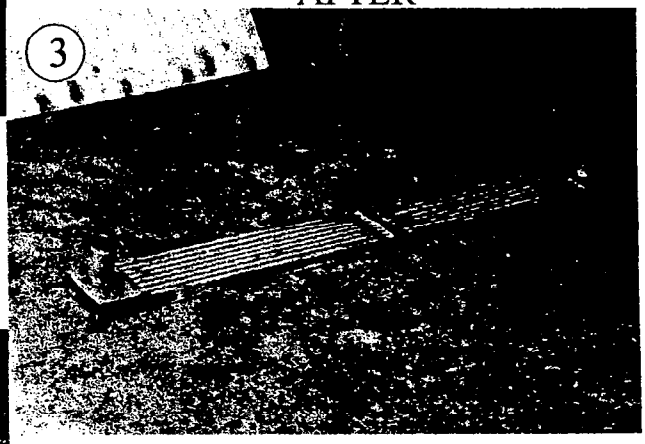

3. Keel cooler straightened and repaired.

BEFORE

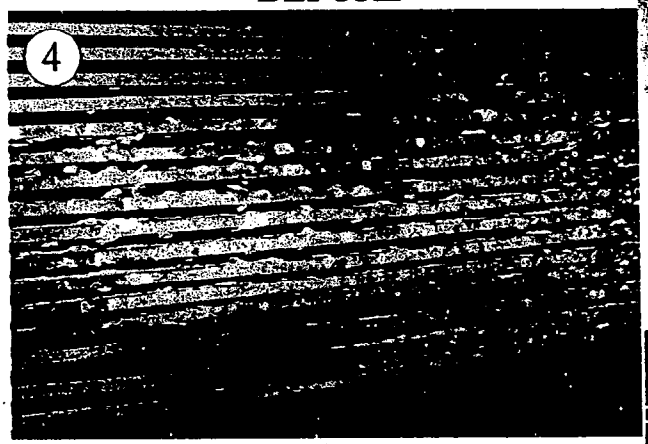

4. Keel cooler before cleaning.

AFTER

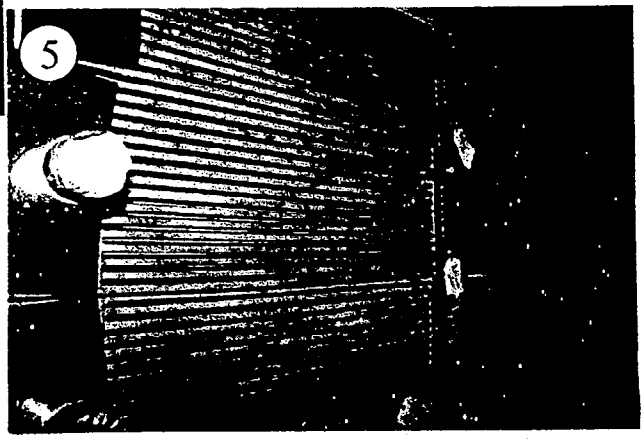

5. Keel cooler after being cleaned, repaired, threads reworked and replacement of gaskets and anodes.

KEEL COOLERS
Manufacturing

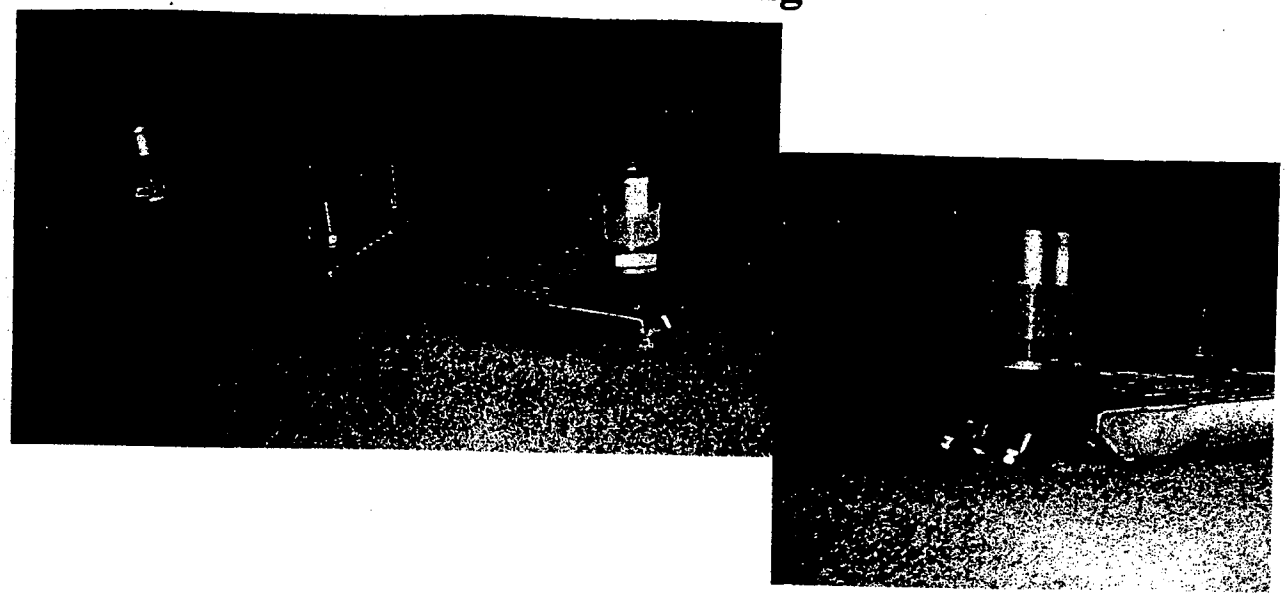

Welded Construction For Dependability & Durability.

Seamless 90/10 Copper-Nickel Rectangular Tubes
- With 0.070" Wall Thickness
- Exceptional Heat Transfer Properties
- Excellent Corrosion/Erosion Resistance To The Effects Of Sea Water.
- Exceptional Anti-Fouling Capabilities

Many Models Available - Interchangeable With Competition.

Each Unit Equipped With Cathodic Protection.

Before Delivery:
- Each Unit Is Assembled, Pressure Tested And Hydrostatically Tested

Full Scale Heat Transfer Dynamometer

Continued Research, Design And Testing Of Keel Coolers
- Example: Flange Mounted Keel Cooler To Be In Full Production Soon.

Redesigned Manifold To Improve Water Flow And Pressure Drops.

Full Line Of Replacement Parts In Stock,

Services:
- 24 Hour Emergency Delivery Upon Request (Subject To Prior Sale).
- Clean & Repair Of All Makes Of Keel Coolers.

00515

AUTOMOTIVE & INDUSTRIAL RADIATORS

Sales & Service

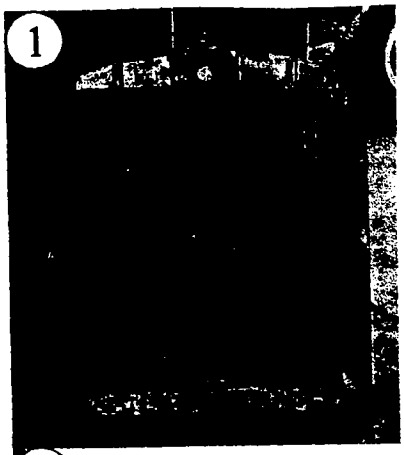

1. 671 Detroit Diesel Radiator before.

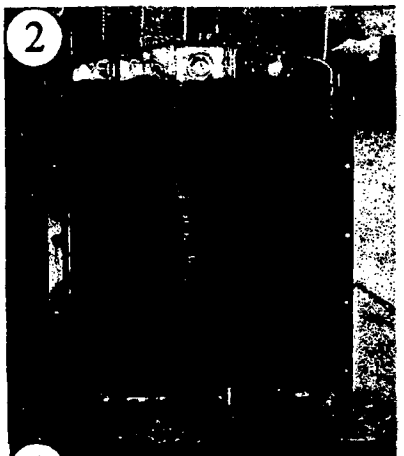

2. 671 Detroit Diesel Radiator after having been recored, side walls replaced and coppon coated.

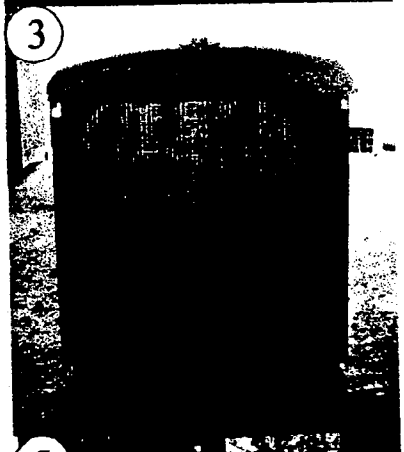

3. 8V71 Detroit Diesel recored radiator. Radiator has solder coated core. The tanks and side walls were sandblasted, primed and painted.

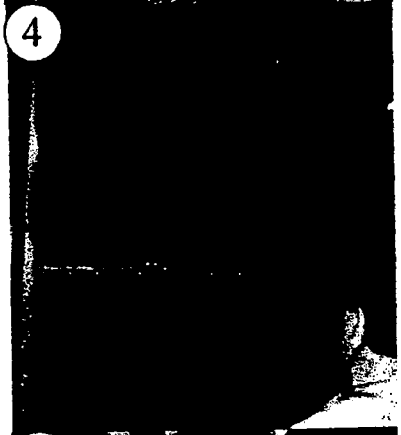

4. Six section radiator in the reassembly process. Cores are solder coated. The tanks and side walls were sand-blasted, primed and painted.

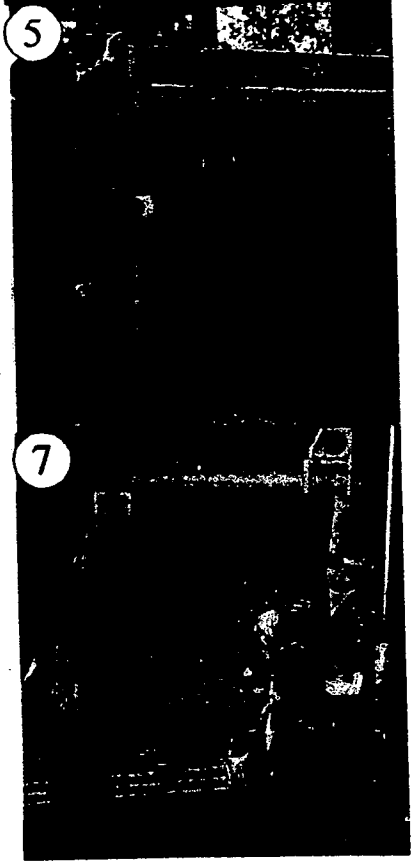

5. New Cummins radiator being loaded for delivery.

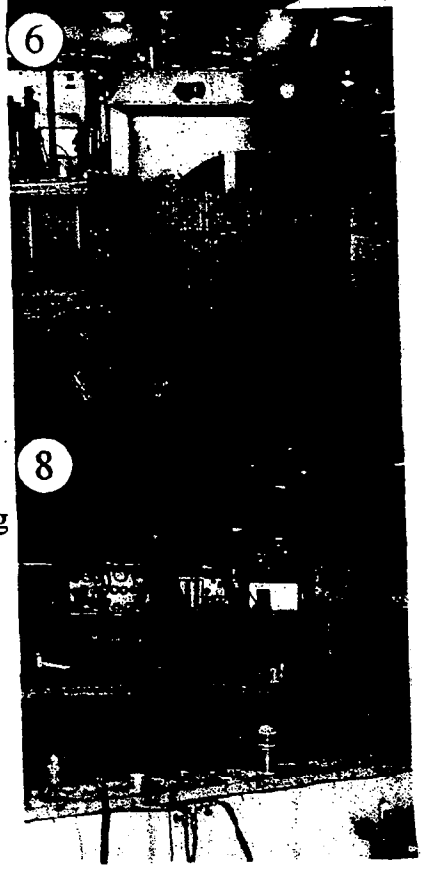

6. Four section radiator and aftercooler after having been recored with solder coated cores.

7. Radiator in the process of being repaired and sidewalls will be replaced.

8. Industrial radiator being prepared for pressure testing.

00516

BATTERIES & ACCESSORIES

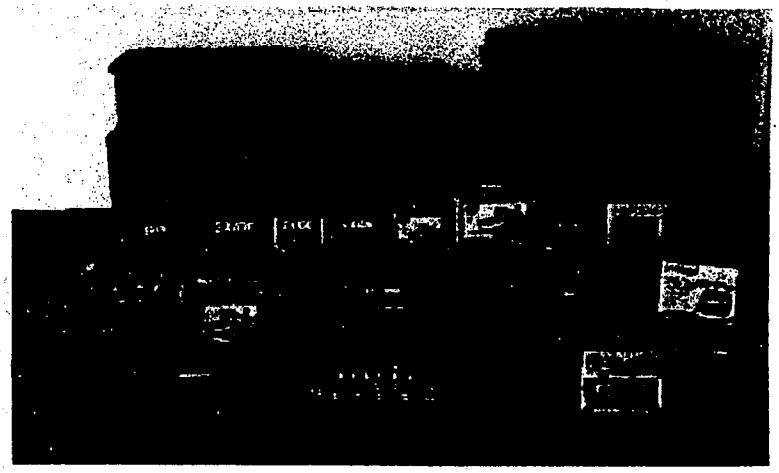

Automotive, Truck, Industrial & Marine Batteries
(6, 8, 12, & 24 Volts)
Custom made battery cables.
Coast Guard approved battery boxes
(4D, 8D, Universal)
Battery Terminals
Battery Charges

TRUCK ACCESSORIES

Duraliner Bed Liners
Better Built Aluminum Tool Boxes
Bug Shields
Trailer Hitches
Bed Rails
Fender Flares
Rubber Mats
And much more.

Call for all your truck accessories needs!

00517