This Opinion is Not a
Precedent of the TTAB

Mailed: January 8, 2021

UNITED STATES PATENT AND TRADEMARK OFFICE

Trademark Trial and Appeal Board

In re Carling Technologies, Inc.

Serial No. 88279409
Serial No. 88279448
(Consolidated)

Todd M. Oberdick and David W. Aldrich of Forge IP, PLLC,
for Carling Technologies, Inc.

Christopher M. Nunley, Trademark Examining Attorney, Law Office 104,
Zachary Cromer, Managing Attorney.

Before Zervas, Taylor, and Larkin,
Administrative Trademark Judges.

Opinion by Larkin, Administrative Trademark Judge:

Carling Technologies, Inc. ("Applicant") seeks registration on the Principal Register of the claimed product configuration marks shown below, both for "actuators for rocker switches,"[1] in International Class 9:

[1] "The Board may take judicial notice of dictionary definitions, including online dictionaries, definitions in technical dictionaries and translation dictionaries that exist in printed format." *In re Omniome, Inc.*, 2020 USPQ2d 3222, *2 n.17 (TTAB 2019). We take judicial notice that a "rocker switch" is "an electrical switch that you press on one side to turn a device on and the other to turn it off, rather than a switch that you move from one position to the other."

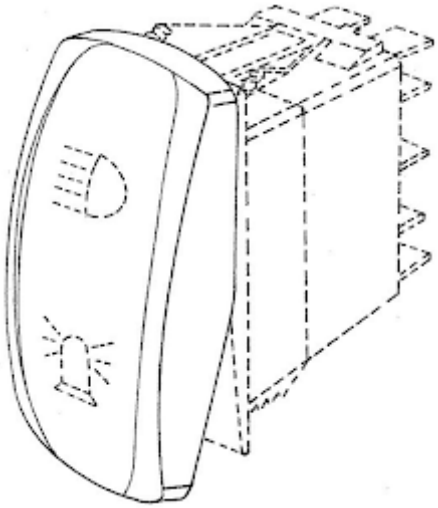

[2]

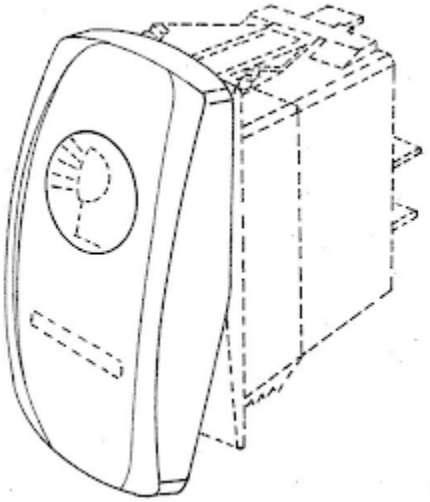

[3]

CAMBRIDGE DICTIONARY (dictionary.cambridge.org/us/dictionary/english/rocker-switch, last accessed on January 8, 2021). As explained below, an "actuator" turns the switch on or off.

[2] Application Serial No. 88279409 was filed on January 28, 2019 under Section 1(a) of the Trademark Act and with a claim of acquired distinctiveness under Section (2)(f) of the Trademark Act, 15 U.S.C. §§ 1051(a) and 1052(f), based on Applicant's claimed first use and first use in commerce since January 2002. Applicant describes this claimed mark as "a three-dimensional design of an actuator for rocker switches. The three-dimensional shape of the actuator features a convex front surface having raised left and right edges. The solid lines show the positioning of the mark on the goods and those features claimed by the owner as its mark. The matter shown by the dotted lines is not part of the mark, and no claim is made to it apart from the mark as shown."

[3] Application Serial No. 88279448 was also filed on January 28, 2019 under Sections 1(a) and (2)(f) of the Trademark Act, based on Applicant's claimed first use and first use in commerce since January 2002. Applicant describes this claimed mark as "a three-dimensional design of

The Trademark Examining Attorney refused registration of Applicant's claimed marks under Sections 1, 2, and 45 of the Trademark Act, 15 U.S.C. §§ 1051, 1052, and 1127, on the grounds that the claimed marks are non-distinctive product designs that do not function as marks and that Applicant's showings of acquired distinctiveness under Section 2(f) of the Trademark Act are insufficient.

When the refusals were made final, Applicant requested reconsideration in both cases and then appealed. After the Examining Attorney denied the reconsideration requests, the appeals were resumed and are fully briefed.[4] Because the appeals have common issues of law and fact and virtually identical records, we consolidate them and will decide them in a single opinion. *In re S. Malhotra & Co. AG*, 128 USPQ2d 1100, 1102 (TTAB 2018). We affirm the refusals to register.

I. Records on Appeal[5]

The records on appeal in the two cases are virtually identical. They include Applicant's original and substitute specimens of use, which we reproduce below:

---

an actuator for rocker switches. The three-dimensional shape of the actuator features a convex front surface having raised left and right edges and a window near the top. The solid lines show the positioning of the mark on the goods and those features claimed by the owner as its mark. The matter shown by the dotted lines is not part of the mark, and no claim is made to it apart from the mark as shown."

[4] Citations in this opinion to the briefs refer to TTABVUE, the Board's online docketing system. *Turdin v. Tribolite, Ltd.*, 109 USPQ2d 1473, 1476 n.6 (TTAB 2014). Specifically, the number preceding TTABVUE corresponds to the docket entry number, and any numbers following TTABVUE refer to the page number(s) of the docket entry where the cited materials appear. The briefs in the two cases are substantially identical, and unless otherwise indicated, citations are to the briefs in Serial No. 88279409.

[5] Citations in this opinion to the application records, including the requests for reconsideration and their denials, are to pages in the Trademark Status & Document Retrieval ("TSDR") database of the United States Patent and Trademark Office ("USPTO"). Where necessary, we will indicate the different places in each file history where referenced evidence appears. The Examining Attorney issued, and subsequently withdrew, functionality

(Application Serial No. 88279409 (original specimen))

(Application Serial No. 88279448 (substitute specimen))

and the following materials:

refusals in both applications, November 4, 2019 Final Office Actions at TSDR 1, and we do not summarize the record evidence directed specifically to those refusals.

- Pages from Applicant's website at carlingtech.com describing and displaying Applicant's switch actuator types,[6] made of record by the Examining Attorney in both applications;[7]
- The declarations of three employees of Applicant, Gerald Peplau, its Product Manager, Harold Wiegard, its Vice President, Global Quality, and Rogelio Rangel Loera, its Production Superintendent, and the declarations of two employees of resellers of Applicant's products, James Parasopoulos and Dewey M. Thrash V, made of record by Applicant in both applications;[8]
- U.S. Design Patent No. D458,231 (the "'231 Patent"), which claims "[t]he ornamental design for an electrical switch actuator," made of record by Applicant in both applications;[9]
- Catalogs showing Applicant's products, made of record by Applicant in both applications;[10]

---

[6] Applicant's website defines a "switch actuator" as "the mechanical component on a switch used to manually turn a circuit on and off," and states that "[s]witch actuators can also serve to visually indicate whether a circuit is ON or OFF." March 22, 2019 Office Action at TSDR 2 (Serial No. 88279409).

[7] *Id.* at TSDR 2-3 (Serial Nos. 88279409 and 88279448).

[8] September 21, 2019 Responses to Office Action at TSDR 20-21 (Serial No. 88279409) and TSDR 21-22 (Serial No. 88279448); April 21, 2020 Requests for Reconsideration at TSDR 12-25 (Serial Nos. 88279409 and 88279448). We will cite the declarations by paragraph number (e.g., "Peplau Decl. ¶ 12"). Applicant also submitted the declaration of Walt Sadowski, its Manager, New Product Development, in each application, but Mr. Sadowski's testimony was directed to the functionality refusals that were withdrawn by the Examining Attorney.

[9] September 21, 2019 Responses to Office Action at TSDR 41-43 (Serial No. 88279409) and TSDR 42-44 (Serial No. 88279448).

[10] September 21, 2019 Responses to Office Action at TSDR 44-385 (Serial No. 88279409) and TSDR 45-386 (Serial No. 88279448).

- Advertisements and promotional materials for Applicant's products, made of record by Applicant in both applications;[11]
- Photographs of products that Applicant claims were copied from Applicant's products, made of record by Applicant in each application;[12] and
- Webpages showing products that the Examining Attorney claims are similar in appearance to each of Applicant's products, made of record by the Examining Attorney in each application.[13]

II. Analysis of Refusal

A. Applicable Law

In *Wal-Mart Stores, Inc. v. Samara Bros.*, 529 U.S. 205, 54 USPQ2d 1065, 1069 (2000), the Supreme Court held that "[c]onsumers are aware of the reality that, almost invariably, even the most unusual of product designs . . . is intended not to identify the source, but to render the product itself more useful or more appealing." "As a result, product designs can never be inherently distinctive and will always require evidence of acquired distinctiveness or secondary meaning to be registrable as marks.'" *In re OEP Enters., Inc.*, 2019 USPQ2d 309323, *16 (TTAB 2019) (quoting *Kohler Co. v. Honda Giken Kogyo K.K.*, 125 USPQ2d 1468, 1503-04 (TTAB 2017)

[11] September 21, 2019 Responses to Office Action at TSDR 439-75 (Serial No. 88279409) and TSDR 440-76 (Serial No. 88279448).

[12] September 21, 2019 Responses to Office Action at TSDR 426-38.

[13] November 4, 2019 Final Office Actions at TSDR 2; June 11, 2020 Denials of Request for Reconsideration at TSDR 2-10.

(citations and internal quotation marks omitted)).[14] "Acquired distinctiveness means that consumers have come to associate the mark with a single (even if anonymous) source." *Kohler*, 125 USPQ2d at 1504 (citation omitted). An applicant "has the burden of demonstrating that its mark has acquired distinctiveness." *In re Change Wind Corp.*, 123 USPQ2d 1453, 1467 (TTAB 2017).

In assessing whether a descriptive term has acquired distinctiveness, we must first determine the term's degree of descriptiveness, *Royal Crown Cola Co. v. Coca-Cola Co.*, 892 F.3d 1358, 127 USPQ2d 1041, 1048 (Fed. Cir. 2018), because "[t]he greater the degree of descriptiveness the term has, the heavier the burden to prove it has attained secondary meaning." *Id.* (quoting *In re Boston Beer Co.,* 198 F.3d 1370, 53 USPQ2d 1056, 1058 (Fed. Cir. 1999) (internal quotation omitted)). "Analogizing to the heavier burden on an applicant for a highly descriptive term, an applicant for a product design mark bears a heavier burden because consumers are not predisposed to viewing the product features as source identifiers." *In re MK Diamond Prods., Inc.*, 2020 USPQ2d 10882, *19 (TTAB 2020). In that regard, the Examining Attorney made of record photographs of multiple rocker switches with actuators that are similar in appearance to Applicant's. We reproduce several below:

[14] The Examining Attorney claims in his brief in Serial No. 88279409 that "[t]here are two issues on appeal, whether Applicant's mark is a non-distinctive product design and whether the Applicant's claim of acquired distinctiveness is sufficient to show that the mark is perceived by consumers as a source identifier for the relevant goods." 8 TTABVUE 3. Whether Applicant's mark is a non-distinctive product design is not an issue because we agree with Applicant that it "has never argued (during prosecution or on appeal) that the applied-for Mark (which is product configuration) is *inherently* distinctive." 9 TTABVUE 3. Applicant properly confines its evidence and argument on appeal to its claim that each of its product configurations "is distinctive because it has acquired secondary meaning." *Id.*

[15]

[16]

[17]

[15] June 11, 2020 Denials of Requests for Reconsideration at TSDR 2.

[16] *Id.* at TSDR 4.

[17] *Id.* at TSDR 9.

[18]

[19]

Applicant does not deny that these actuators resemble its own. Instead, Applicant argues in each case that it enjoyed exclusivity of use of its claimed marks under the '231 Patent, which was in effect between June 2002 and June 2016, 9 TTABVUE 4, that following expiration of the '231 Patent, Applicant "filed the subject application[s] for a federal registration to be able to enforce its rights in its trade dress in order to maintain this exclusivity," *id.*, and that the "current appearance of these inferior copycats, which are made cheaply overseas and have been quickly popping up at an

[18] *Id.* at TSDR 10,

[19] November 4, 2019 Final Office Action at TSDR 2 (Serial No. 88279409).

alarming rate, does not negate Applicant's evidence of nearly two decades of continuous, exclusive use." *Id.* at 4-5. Because Applicant admits that third parties are "quickly popping up at an alarming rate" to sell rocker switches with actuators that Applicant admits resemble its own, and there is not an insignificant number of examples in the record, registrations of the claimed marks "may not issue except upon a substantial showing of acquired distinctiveness." *Kohler*, 125 USPQ2d at 1505 (quoting *In re Udor U.S.A., Inc.*, 89 USPQ2d 1978, 1986 (TTAB 2009)).

"Our analysis of the evidence of acquired distinctiveness is based on the totality of the evidence." *MK Diamond Prods.*, 2020 USPQ2d 10882 at *20. The Federal Circuit has held that

> the considerations to be assessed in determining whether a mark has acquired secondary meaning can be described by the following six factors: (1) association of the trade dress with a particular source by actual purchasers (typically measured by customer surveys); (2) length, degree, and exclusivity of use; (3) amount and manner of advertising; (4) amount of sales and number of customers; (5) intentional copying; and (6) unsolicited media coverage of the product embodying the mark.

Converse, Inc. v. ITC, 909 F.3d 1110, 128 USPQ2d 1538, 1546 (Fed. Cir. 2018). "While *Converse* concerned an appeal from a decision issued by the International Trade Commission, the Federal Circuit's clarification of the factors in determining acquired distinctiveness is equally applicable to any Board proceeding that necessitates a showing of secondary meaning," including both inter partes cases and ex parte appeals. *In re SnoWizard, Inc.*, 129 USPQ2d 1001, 1005 n.8 (TTAB 2018). We discuss below those *Converse* factors that are relevant to these cases.

B. Analysis of Evidence and Arguments Relating to the Relevant *Converse* Factors

Applicant argues in its appeal brief that it has submitted "substantial evidence regarding its extensive use, commercial success and advertising, consumer recognition, and, perhaps most significantly, evidence that recent counterfeit products have been marketed as 'Carling style,' and that customers have returned defective counterfeit products to [Applicant], all showing that consumers associate this product configuration with [Applicant]," 4 TTABVUE 5, and in its reply brief, Applicant argues that it "has submitted various forms of evidence showing that nearly all of [the *Converse*] factors support a finding that the applied-for Mark has acquired distinctiveness." 9 TTABVUE 4. The Examining Attorney responds that Applicant's "evidence remains insufficient to establish acquired distinctiveness," 8 TTABVUE 4, because "[t]he ultimate test in determining acquisition of distinctiveness under Section 2(f) is not applicant's efforts, but applicant's success in educating the public to associate the claimed mark with a single source." *Id.* at 4-5.

1. Association of the trade dress with a particular source by actual purchasers[20]

Applicant offers the declarations of James Parasopoulos and Dewey M. Thrash V, employees of two "customer dealers who buy and sell [Applicant's] Contura switches

[20] This factor is "typically measured by customer surveys." *Converse*, 128 USPQ2d at 1546. Applicant does not provide a survey, but offers the retailer declarations discussed below to establish association of Applicant's claimed marks with Applicant by actual purchasers. We will consider the declarations under the first *Converse* factor for whatever probative value they may have as direct evidence of acquired distinctiveness.

and switches from [Applicant's] competitors." 4 TTABVUE 6.[21] Mr. Parasopoulos is employed by a company in Cupertino, California that has been buying and selling actuators and switches from Applicant and other manufacturers for 11 years, Parasopoulos Decl. ¶ 5, while Mr. Thrash is employed by a company in Elkhart, Indiana that has been buying actuators and switches from Applicant and buying and selling switches from other manufacturers for 13 years. Thrash Decl. ¶ 5.

For the most part, their testimony is substantively identical. Each declarant refers to the same attached Exhibits A and B, which consist of the drawings of the claimed marks in the two applications, and testifies that "[w]hen I reviewed the images attached at Declaration Exhibits A and B, I immediately recognized these as Carling's 'Contura V' switch actuators based on their distinctive style. I associate the ornamental design shown in these pictures with Carling." Parasopoulos Decl. ¶ 6; Thrash Decl. ¶ 6.

Each declarant also lists "[s]ome of the features of the product shown" in each exhibit that "cause me to immediately recognize it" as one of Applicant's products. Parasopoulos Decl. ¶¶ 7-8; Thrash Decl. ¶¶ 7-8. The list of features is the same for each product. For the product configuration shown in Exhibit A (Serial No. 88279409), and reproduced below:

[21] Applicant claims that the declarations of its own employees should also be considered under this *Converse* factor, 4 TTABVUE 6, but we will consider them under the second factor because they do not involve the testimony of "actual purchasers." *Converse*, 128 USPQ2d at 1546.

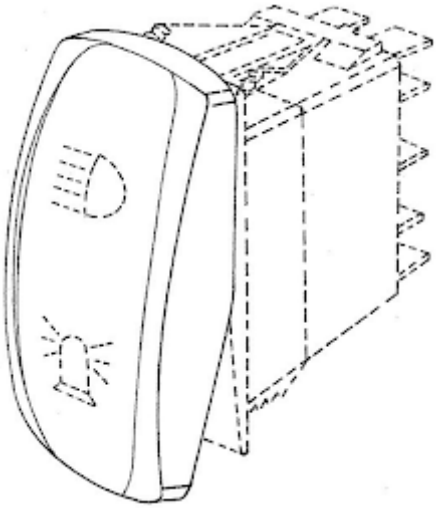

the listed features are "[i]ts unique, three dimensional shape," "[t]he single, smooth convex surface that extends along the front of the actuator from the top to the bottom," "[t]he raised edge along the left and right sides of the actuator, but not along its top or bottom, that give the center a recessed look all the way through the top and bottom of the actuator," and "[t]he gradual, inward curve of the raised edges towards the top and bottom of the actuator." Parasopoulos Decl. ¶ 7; Thrash Decl. ¶ 7.

For the product configuration shown in Exhibit B (Serial No. 88279448), and reproduced below:

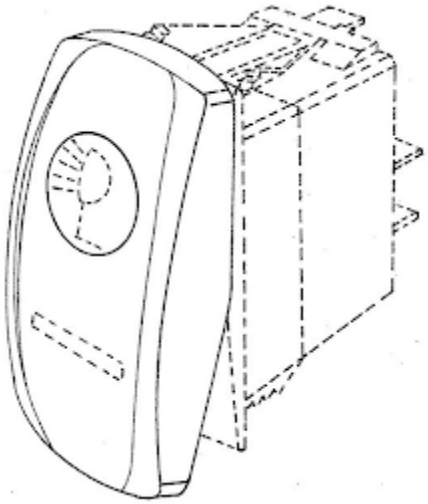

the listed features are the same identified in connection with Exhibit A, plus "[t]he shape and placement of the single, circular window." Parasopoulos Decl. ¶ 8; Thrash Decl. ¶ 8.

Each declarant also opines that "[t]his combination of design elements of the 'Contura V' switch actuators are [sic] unique and makes them immediately recognizable as Carling's 'Contura V' products," Parasopoulos Decl. ¶ 9; Thrash Decl. ¶ 9, and testifies to the popularity of Applicant's products. Mr. Parasopoulos states that "[o]f all the actuators/switches we buy/sell/use, the 'Contura V' is one of the most popular/common. In fact, on many occasions, our customers specifically seek/request to use the 'Contura V' design." Parasopoulos Decl. ¶ 10. Mr. Thrash states that "[o]f all the switches we buy and use, the 'Contura V' is one of the most common. In fact, on many occasions, we/customers specifically seek/request to use the 'Contura V' design." Thrash Decl. ¶ 10.

According to Applicant, the two declarations

> detail how the product design of Carling's Contura V is unique and immediately recognizable as a Carling switch, how their own customers specifically request Carling's Contura V switch, and how their customers even mistakenly believe that recent plagiarized products from China are Carling's Contura V switch based on the distinctive product design of the copied Contura V switch.

Id.

The Examining Attorney responds that these declarations and the others are from "interested parties [and] do not show that independent consumers will view the mark as a source identifier." 8 TTABVUE 5. He argues that the resellers "have a vested interest in the sale of the Applicant's goods and their ability to prevent others from

offering similar goods," *id.*, and "have decades of experience interacting with the Applicant's goods and are not considered average consumers." *Id.* The Examining Attorney also argues that "these affidavits and declarations were clearly prepared by the Applicant and/or on their behalf. Each declaration uses an identical format and identical wording for statements 6, 7, 8, and 9, which speak directly to the issue of acquired distinctiveness. Accordingly, these declarations are also entitled to little weight." *Id.* at 5-6.

In reply, Applicant argues that the fact that it prepared the declarations is irrelevant because "[t]hese are sworn statements, and it has long been recognized that they are therefore legitimate evidence that must be considered," 9 TTABVUE 8, and that the "declarants are themselves consumers of one type, who also interact with consumers of another type." *Id.* at 9.

We find that the two non-party declarations are problematic for two primary reasons. First, the language of the declarations confirms that the declarations were prepared by Applicant or its counsel, and we agree with the Examining Attorney that the form nature of the declarations reduces their evidentiary value.[22] The Board has repeatedly held that "the probative weight of [such] declarations is lessened by the fact that they are identical in form and are not composed individually." *MK Diamond*

[22] At the same time, however, we disagree with the Examining Attorney to the extent that he suggests that the fact that these witnesses and the party witnesses "have a vested interest in the sale of the Applicant's goods and their ability to prevent others from offering similar goods," 8 TTABVUE 5, necessarily reduces the probative value of their testimony. Given the nature of the evidence that is relevant under the *Converse* factors, interested witnesses such as those here will invariably be the source of most testimony. The issue is whether the testimony is persuasive even though it is offered by an interested witness.

Prods., 2020 USPQ2d 10882 at *25. "While form statements may be submitted as evidence of acquired distinctiveness, we generally find them—and find them here—to be less persuasive than statements expressed in a declarant's own words." *Id.* (citing *Kohler*, 125 USPQ2d at 1507). We find it particularly significant that the identical listed features that each declarant states causes him to associate the configurations with Applicant were crafted by Applicant or its counsel to track its argument regarding the elements of its mark in Application Serial No. 88279409, 4 TTABVUE 3, and do not reflect the "spontaneous personal knowledge" of each declarant as to what makes Applicant's goods unique in appearance. *Kohler*, 125 USPQ2d at 1508.

Second, a 2018 catalog states that Applicant has more than 70 distributors worldwide, suggesting that two resellers are a fraction of Applicant's United States distributors, and that Applicant serves a wide variety of markets, including the marine, military, renewable energy, medical, industrial control, audio/visual, commercial food, HVAC, floor care, generators, small appliances, security systems, and test and measurement industries.[23] The record is devoid of testimony from anyone in these industries, as well as testimony from any end users of the goods. "While we would neither expect nor require scientific sampling in the use of customer declarations, some degree of geographic and customer diversity is necessary for the declarations to have significant probative value," *id.* (finding that multiple "Distributor Statements" from distributors of applicant's engines were insufficient to

[23] September 21, 2019 Response to Office Action at TSDR 46.

enable Board to "determine whether the witnesses are representative of [engine] purchasers" where "the record show[ed] that, in addition to distributors, OEMs, retailers, and rental yards, among others" were customers of applicant's engines), and we find that the two reseller declarations are not a representative sample of the universe of purchasers of Applicant's goods, including end users. *See also MK Diamond Prods.*, 2020 USPQ2d 10882 at *25 (finding that 12 customers declarations, including 11 identical ones, did not "suggest that this was a representative selection of possible declarants"); *In re Pacer Tech.*, 338 F.3d 1348, 67 USPQ2d 1629, 1633 (Fed. Cir. 2003) (finding that five affidavits of individuals in the artificial nail business "at most purport to represent the views of a small segment of the relevant market.").

We find that the scripted testimony of two resellers is insufficient in quantity and quality to have significant probative value under the first *Converse* factor as direct evidence of the distinctiveness of Applicant's configuration marks.

2. Length, Degree, and Exclusivity of Use

Mr. Peplau testified that Applicant "has continuously used the design configurations of the Contura V in commerce since January 2002," Peplau Decl. ¶ 9, that Applicant obtained the '231 Patent "to ensure that its use of these Contura V design configurations remains exclusive," Peplau Decl. ¶ 10,[24] and that Applicant "has actively monitored the market for any copiers of these design configurations." Peplau Decl. ¶ 10. He is silent as to whether any actuators with similar appearances

[24] The '231 Patent issued on June 4, 2002 and expired on June 4, 2016.

were sold during the term of the '231 Patent, *cf. OEP Enters.*, 2019 USPQ2d 309323 at *26 (discussing applicant's enforcement efforts under its design patent), or about any enforcement efforts by Applicant during the four years following expiration of the patent term, when Applicant acknowledges that multiple similar products began "quickly popping up at an alarming rate." 9 TTABVUE 4-5.[25]

Even assuming, however, that Applicant enjoyed exclusive use of the applied-for marks during the 14-year term of the '231 Patent, "long and exclusive use alone does not necessarily establish that a product feature has acquired distinctiveness." *MK Diamond Prods.*, 2020 USPQ2d10882 at *20. In *MK Diamond Prods.*, the Board held that because the applied-for mark was "highly descriptive or non-distinctive, use for a period of approximately fourteen years was insufficient to establish acquired distinctiveness." *Id.* As discussed and shown above, we have found that Applicant's

[25] Applicant argues in its reply brief that these products are of very recent vintage, specifically, as of the June 11, 2020 date of the denial of its request for reconsideration, which Applicant argues is "a year and a half after Applicant filed the subject trade dress application." 9 TTABVUE 4. The webpages made of record by the Examining Attorney in his June 11, 2020 Denial of Request for Reconsideration state that the various products were first available at various times prior to June 11, 2020, including on February 17, 2019, *id.* at TSDR 2, February 14, 2014, *id.* at TSDR 3, April 13, 2017, *id.* at TSDR 4, March 13, 2017, *id.* at TSDR 5, September 1, 2018, *id.* at TSDR 6, March 15, 2019, *id.* at TSDR 7, January 2, 2020, *id.* at TSDR 8, January 30, 2014, *id.* at TSDR 9, and January 24, 2018. *Id.* at TSDR 10. Applicant also made of record evidence of the sale of "copycat versions of the Contura V" in its September 21, 2019 Response to Office Action at TSDR 427, 431, 434, and two of Applicant's witnesses confirmed the existence of these self-styled "copycat" products prior to June 11, 2020. Mr. Wiegard stated in his April 15, 2020 declaration that "I have seen that these rocker switches have started to be copied and sold by various Chinese manufacturers," Wiegard Decl. ¶ 4, while Mr. Loera similarly testified in his April 15, 2020 declaration that he had "seen fake versions of these rocker switches that customers tried to return to Carling." Loera Decl. ¶ 4. The record as a whole, augmented by Applicant's acknowledgement of the proliferation of similar products, supports a finding that whatever exclusivity Applicant enjoyed during the term of the '231 Patent disappeared at some point long before June 11, 2020.

products bearing the applied-for marks appear in the market with multiple similar looking actuators, and we find that Applicant's presumed exclusivity of use of its product configurations during the 14-year term of the '231 Patent and perhaps for some period after the expiration of the '231 Patent has little probative value under the second *Converse* factor as evidence of acquired distinctiveness.

3. The Amount and Manner of Advertising

Applicant argues that it has "submitted numerous advertising materials from its marketing campaign for its Contura switches" in the form of "various email blasts and e-newsletter banners," 4 TTABVUE 12, but Applicant's briefs and Mr. Peplau's declaration are silent as to where, when, and how frequently such "email blasts and e-newsletter banners" or other advertising has appeared, to whom it has been exposed, and how much Applicant has expended on it. Even compelling "'advertising figures do not always amount to a finding of acquired distinctiveness,'" *Kohler*, 125 USPQ2d at 1516 (quoting *Stuart Spector Designs Ltd. v. Fender Musical Instruments Corp.*, 94 USPQ2d 1549, 1572 (TTAB 2009)), but here we have none. In the absence of any metrics for Applicant's self-described "marketing campaign for its Contura switches," the advertisements themselves have no probative value as proof of acquired distinctiveness. *Cf. In re Hikari Sales USA, Inc.*, 2019 USPQ2d 111514, *15-16 (TTAB 2019) (discussing cases in which modest advertising expenditures were found not to support a showing of acquired distinctiveness). Nevertheless, "[w]e will examine Applicant's advertising to see whether it encourages consumers or the trade

to view the applied for design[s] as Applicant's mark[s]." *OEP Enters.*, 2019 USPQ2d 309323 at *23.[26]

Applicant argues that a review of its advertisements "reveals that these advertisements for [its] switches prominently display *the actuators themselves*, adjacent to the Carling name." 4 TTABVUE 12 (emphasis in original). We display five of the advertisements below:[27]

[28]

[26] As noted below, there are no advertisements showing products bearing the mark claimed in Serial No. 88279448.

[27] The specific nature of these examples of advertising in the record is unclear.

[28] September 21, 2019 Responses to Office Action at TSDR 441 (Serial No. 88279409) and 442 (Serial No. 88279448).

[29]

[30]

[29] *Id.* at TSDR 442 (Serial No. 88279409) and 443 (Serial No. 88279448).

[30] *Id.* at TSDR 443 (Serial No. 88279409) and 444 (Serial No. 88279448).

[31]

[32]

Applicant's catalogs also display and describe its Contura V actuators:

[31] *Id.* at TSDR 448 (Serial No. 88279409) and 449 (Serial No. 88279448). Applicant displays this advertisement in its appeal briefs at 4 TTABVUE 13.

[32] *Id.* at TSDR 447 (Serial No. 88279448).

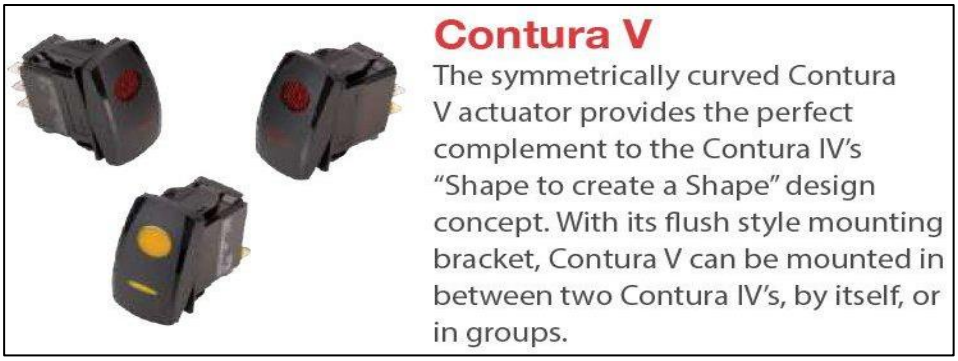

[33]

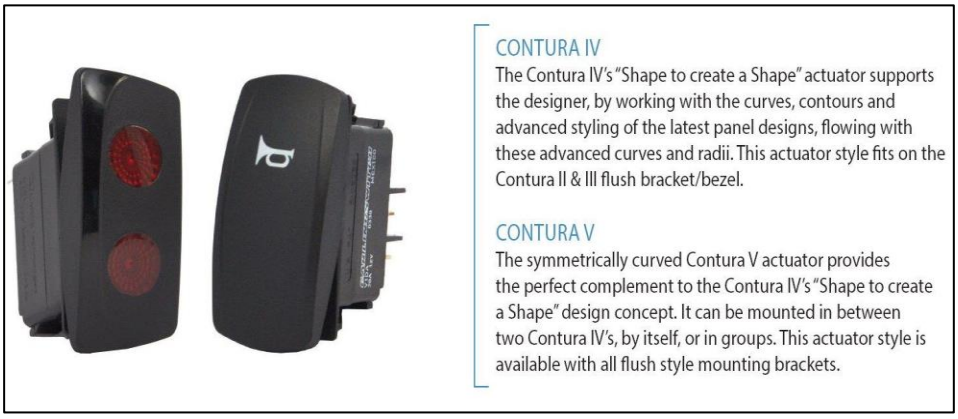

[34]

Applicant concedes that its advertisements do not urge consumers to look for the particular features of the actuators for which Applicant seeks registration when it argues that while "'look for' advertising can be especially probative, it is certainly not necessary." 4 TTABVUE 12 (citing *Thomas & Betts Corp. v. Panduit Corp.*, 138 F.3d 277, 46 USPQ2d 1026, 1037 (7th Cir. 1998)).

The Examining Attorney responds that Applicant has "provided brochures and advertisements in support of acquired distinctiveness," 8 TTABVUE 7, but that "these are not 'look for' advertisements." *Id.* According to the Examining Attorney,

[33] *Id.* at TSDR 97 (2018 general catalog). This page appears to show the product configuration mark claimed in Serial No. 88279448. The same display and description appear in one of Applicant's "Transportation Switches & Controls" catalogs, *id.* at TSDR 304, and on a page from another unidentified 2018 promotional piece. *Id.* at TSDR 372.

[34] *Id.* at TSDR 268 (2015 marine catalog).

"[w]hile the Applicant's advertisements show the goods, they also show other goods and wording that is also not trademark matter," and it "would be impossible for consumers to be able to pull out any specific product from these advertisements and identify a specific product configuration as a separable source identifier apart from all other goods, wording, and additional trademarks." *Id.*

In reply, Applicant cites the Seventh Circuit's decision in *Thomas & Betts* for the propositions that "advertising which prominently features the mark can also function to draw consumers' attention to that mark and to associate it with the mark's owner," 9 TTABVUE 5, and that "[t[here is no hard-and-fast rule establishing that the shape of a product must be specifically pointed out in advertising . . . advertising which encourages consumers to identify the claimed trade dress with the particular producer is some evidence of secondary meaning." *Id.* (quoting *Thomas & Betts*, 46 USPQ2d at 1037). Applicant concludes that "[i]n this case, advertisement after advertisement displaying the trade dress (the applied-for Mark) along with the name of the producer (Carling) does precisely that." *Id.* at 5-6.

In the recent *MK Diamond Prods.* decision, which involved the registrability of the design of a circular saw blade, the Board reiterated that "[w]hen advertisements are submitted as evidence of acquired distinctiveness, they must demonstrate the promotion and recognition of the specific configuration embodied in the applied-for mark and not of the goods in general." *MK Diamond Prods.*, 2020 USPQ2d 10882 at *21 (quoting *Kohler*, 125 USPQ2d at 1516 (internal quotation omitted)). The Board also reiterated that "[t]he sort of advertising that can demonstrate that a product

design feature has acquired distinctiveness is commonly referred to as 'look for' advertising, which directs consumers in no uncertain terms to 'look for' the particular feature(s) claimed as a trademark," *id.* (citing *Kohler*, 125 USPQ2d at 1516), and that "look-for" advertising "does not refer to advertising that simply includes a picture of the product or touts a feature in a non-source identifying manner." *Id.* (quoting *Stuart Spector Designs*, 94 USPQ2d at 1572 (finding that advertisements featuring prominent 'beauty shots' of guitar body shape were not examples of 'look-for' advertising and were not probative of acquired distinctiveness)).

Here, as in *MK Diamond Prods.*, the Applicant does "not deny that its advertising is not 'look-for' advertising, but argues that there is no requirement that an applicant use such advertising in order to establish secondary meaning." *Id.* In that case, the Board noted that "[t]here are cases where the lack of 'look for' advertising [is] not fatal in view of industry practice to recognize certain configurations as source indicators," *id.* (quoting *Stuart Spector Designs*, 94 USPQ2d at 1574), but found that the case before it was not such a case because the practice in the saw blade industry was to show pictures of the goods, including close ups showing their features, next to text touting their merits. *Id.* The Board found that in that context, "in order for saw blade consumers to have any realistic chance of recognizing the applied-for mark in Applicant's advertising—separate and apart from other marks displayed therein—Applicant's advertising would have to 'direct . . . the potential consumer in no uncertain terms to look for' the applied-for mark,'" *id.* (quoting *Stuart Spector Designs*, 94 USPQ2d at 1574), and that the applicant's advertising failed to do so.

The record here shows that rocker switches similarly have been displayed in public-facing materials together with text touting their features.[35] We display one example below:

K5
SEALED
ROCKERS

SEALED, ILLUMINATED ROCKER SWITCHES

ATTRACTIVE & RUGGED FOR WET & DUSTY ENVIRONMENTS

The OTTO K5 series is a quality, precision switch designed to comply with standards established for appliance, marine (ignition protection) and off-road vehicles along with other demanding applications where rugged rocker switches are required.

K5 series sealed rocker switches snap into industry-standard panel cutouts. Choose illuminated and printed legends, thru-panel drain option and switching compatibility from logic level up to 20 amps.

The K5 series offers a choice of LED, incandescent and neon illumination. Legends can be stamped onto a non-illuminated button, stamped onto an illuminated lens or laser etched into the lens and backlit.

Available in standard and logic level contact ratings, the K5 rockers will fit a wide range of applications. Expect a minimum of 25,000 cycles at a full rated load of 20 amps resistive or 15 amps inductive. 100,000 cycles mechanical. A full complement of switch operation is available including momentary and maintained action in 2 or 3-position switches in SPST, SPDT, SPTT, DPST and DPDT circuit arrangements.

OTTO can provide custom colors upon request. Value-added assemblies with wire leads are also available. Please consult the factory for assistance.

Features:

- **Sealed watertight per IP68S and IP69K**
- **Snap-in panel mounting into industry standard panel cutout**
- **Optional panel seal gasket**
- **LED, neon & incandescent lighting**
- **0.250" Quick Connect terminals**
- **Optional one-piece connector**
- **Optional terminal barriers**
- **Logic level up to 20 amp switch**
- **Configurable Single Pole Triple Throw (SPTT) with external jumpers**
- **Soft Touch button available**
- **RoHS compliant**

Raised Bars Shown

Standard Characteristics/Ratings:		
ELECTRICAL RATINGS:		
Load	**Sea Level @ 28VDC**	**Sea Level @ 125VAC, 60/400Hz**
Resistive	20A	16A
Inductive	15A	15A
Lamp	5A	5A
Motor	0.5HP @ 110VAC	
DWV	1000Vrms except across light terminals	
Logic Level	10mA @ 5VDC, max D.C. logic level ratings (void if logic level load(s) exceeded at any time)	
Electrical Life:	25,000 cycles	
LIGHTING:		
Light Source	**Rating**	
Incandescent	(VDC) 6V, 12V, 24V	
Neon	(VAC) 125V, 250V	
LED	(VDC) 2V, 6V, 12V, 24V	
Mechanical Life:	100,000 cycles	
Seal:	IP68S and IP69K	
Operating Temp Range:	-40°C to +85°C	
MATERIALS:		
Case:	Thermoplastic	
Button:	Thermoplastic	
Terminals/Contact:	Brass, silver alloy with silver plate, gold flash for logic level	
Terminal Hardware:	K5 series recommended Quick Connect terminals: AMP 60253-2 for 12-16 AWG AMP 42100-2 for 14-18 AWG	
Mounting Hardware:	None provided	

[36]

[35] September 21, 2019 Response to Office Action at TSDR 388-425.

[36] *Id.* at TSDR 419.

Applicant's catalogs themselves display rocker switches and actuators together with text discussing "product highlights" and "dimensional specifications." We display two examples below:

V-Series
CONTURA SWITCHES

Carling Technologies' sealed V-Series Contura switches are well known for their cutting edge design, high quality, maximum performance and unmatched reliability. These switches are a staple in the marine and transportation industries and have passed a range of environmental, corrosion, temperature, vibration, shock and sealing tests including MIL Std 202F, MIL Std 510.1, UL 1500, ISO 8846, IEC 60529 and BS 5490 among others, making them one of the most rugged and reliable switches ever manufactured.

Resources:

Download 3D CAD Files

IGS > STP >

Watch Product Video

Product Highlights:

- Certified to IP66/68 with dual seals around lamps and rocker stem.
- Silver plated butt contact mechanism provides reliability up to and beyond 100K electrical cycles
- Greaseless construction withstands temperature extremes down to -40°C
- The switch accommodates up to 10 terminals and endless illumination and circuit options.
- The switch connector allows the user to preload FQC terminals for ease of assembly.
- Numerous choices of removable rockers allow for style change without having to retest or re-qualify the switch base.

Typical Applications:

- Marine Panels
- Emergency Vehicles
- Trucks
- Buses
- Construction Equipment
- Motorcycles & ATVs
- Farm Equipment
- Commercial Appliances
- Military Vehicles
- Mining Equipment
- Golf Carts
- Floor Cleaning Equipment
- Utility Vehicles

[37]

[37] *Id.* at TSDR 95.

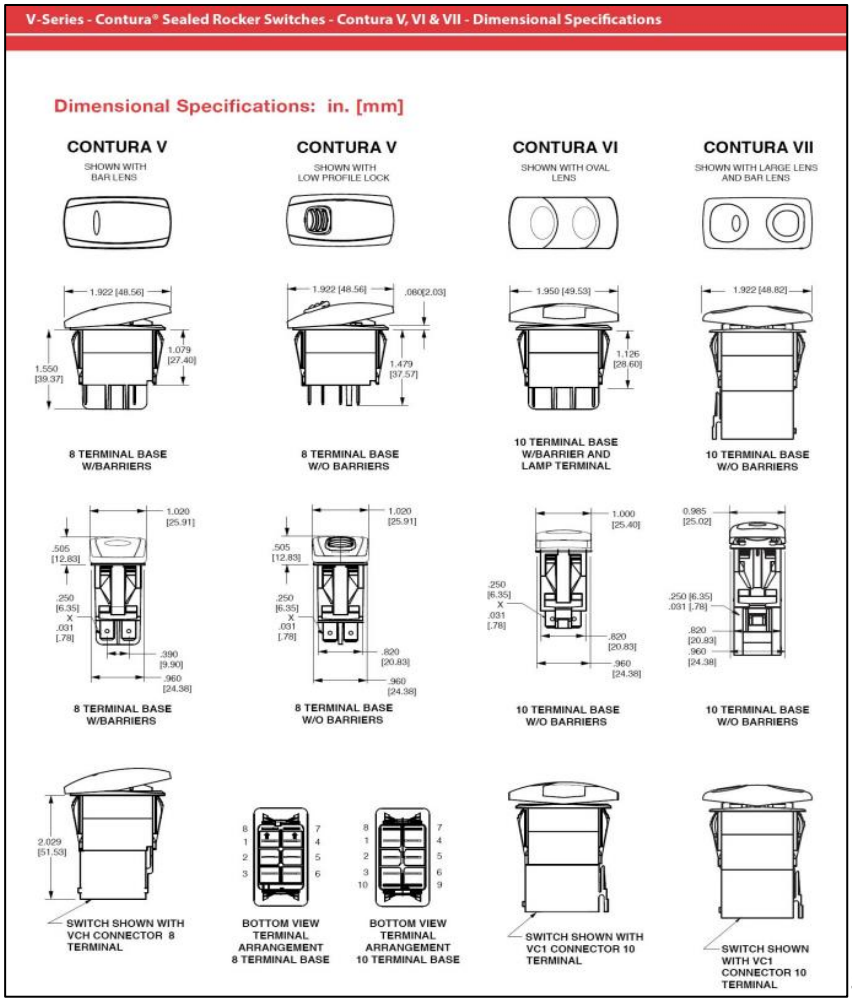

[38]

It is against this backdrop that we must assess the effectiveness of Applicant's advertising in conditioning consumers to identify the product configuration mark claimed in Serial No. 88279409, which Applicant claims "has a distinctive three-dimensional shape, has a single, smooth convex surface that extends from the top to the bottom along its front, and has raised edges along the left and right sides (but not

[38] *Id.* at TSDR 111.

along the top or bottom) of this surface that curve inwardly towards the upper and lower edges." 4 TTABVUE 3.[39]

As noted above, for advertisements to show acquired distinctiveness, "they must demonstrate the promotion and recognition of the specific configuration[s] embodied in the applied-for mark[s] and not of the goods in general." *MK Diamond Prods.*, 2020 USPQ2d 10882 at *21 (internal quotation omitted). Applicant's advertisements display the Contura V rocker switches together with other products, but do not call attention to the appearance of the switch actuators, much less to the specific features of the actuators that Applicant claims as its marks. Given the emphasis in the industry, and in Applicant's own materials, on the non-source identifying features of the goods, "for consumers to have any realistic chance of recognizing the applied-for mark[s] in Applicant's advertising, separate and apart from" the multiple other products, the Carling house mark, and even the other features of the Contura V rocker switches and actuators themselves, "Applicant's advertising would have to 'direct[ ] the potential consumer in no uncertain terms to look for' the applied-for mark[s]." *Kohler*, 125 USPQ2d at 1517 (quoting *Stuart Spector Designs*, 94 USPQ2d at 1574). Applicant's advertising instead "'simply shows the product[s] like any advertising would' . . . but does not refer to [their] general appearance, much less the specific features of the applied-for mark[s]. This is not the 'look-for' advertising that

[39] According to Applicant, its claimed product configuration mark in Serial No. 88279448 has those features plus "a circular window located in the center of the upper portion of the actuator," 4 TTABVUE 3, but the window does not appear on any of the actuators shown in any of the advertisements in the record of that application. *Id.* at 12 (citing September 21, 2019 Response to Office Action at TSDR 442-50).

is capable of creating acquired distinctiveness in any particular element(s) depicted." *Kohler*, 125 USPQ2d at 1517 (quoting *Stuart Spector Designs*, 94 USPQ2d at 1574).

Even if Applicant had done extensive advertising, "[o]n this record, the absence of advertising directing consumers to the specific features of the applied-for mark[s] undermines Applicant's claim of acquired distinctiveness based upon its advertising." *Id.* Applicant's evidence on this *Converse* factor does not support a showing of acquired distinctiveness.

4. Amount of Sales and Number of Customers

Mr. Peplau testified that "[b]ecause the actuators themselves are interchangeable, [Applicant] sells both the complete rocker switch (with actuator), as well as the actuators themselves," Peplau Decl. ¶ 11, that "[b]etween February 2007 and August 2019, [Applicant] sold 10,534,376 Contura V rocker switches, and an additional 1,023,812 Contura V actuators," Peplau Decl. ¶ 13, and that "[i]n total, these Contura V sales amounted to $36,281,217." Peplau Decl. ¶ 13. Applicant argues that "[t]his substantial amount of sales far exceeds the amount necessary to establish commercial success of the product. Lesser amounts have repeatedly been deemed sufficient to establish a level of commercial success supporting a finding of acquired distinctiveness." 4 TTABVUE 14.

The Examining Attorney responds that "Applicant provided evidence of sales figures for Applicant's goods to support the claim that the applied-for mark acquired distinctiveness," but "this evidence is not dispositive of Applicant's claim" because "Applicant's extensive sales may demonstrate the commercial success of Applicant's goods, but not that relevant consumers view the matter as a mark for these goods." 8

TTABVUE 8. In reply, Applicant agrees and acknowledges that "this evidence must be viewed in conjunction with all of the other evidence supporting Applicant's claim of acquired distinctiveness," 9 TTABVUE 6, and that "[w]hen viewed together, this is precisely the type of cumulative evidence found to support a claim of acquired distinctiveness." *Id.*

There are several problems with Applicant's sales evidence. First, Applicant's sales figures for the period 2007-2019 are muddled because they include unit sales of the Contura V actuators alone (1,023,812) and unit sales of rocker switches containing Contura V actuators (10,534,376), but aggregate dollar sales for both actuators and switches (in excess of $36,000,000, or roughly $3,000,000 per year). Each sale of a Contura V actuator alone, or of a rocker switch containing a Contura V actuator, exposes the claimed mark to consumers, but the aggregate dollar sales figure necessarily includes the value of the rocker switches in addition to the value of the actuators, and the aggregate $36,000,000 figure over the 12-year period is thus inflated to some degree. We do not know the dollar value of the actuators alone and thus cannot determine how much of the aggregate $36,000,000 figure that includes sales of rocker switches is attributable to the actuators themselves.

Second, "Applicant provides no industry context for Applicant's unit sales figures, such as Applicant's relative market share . . . or its sales position vis-à-vis its competitors, thus diminishing the probative value of these raw numbers." *MK Diamond Prods.*, 2020 USPQ2d 10882 at *23 (citing *Target Brands Inc. v. Hughes*, 85 USPQ2d 1676, 1681 (TTAB 2007) (holding that it is difficult "to accurately gauge

the level of [sales] success . . . in the absence of additional information such as applicant's market share or how [applicant's] product ranks in terms of sales in the trade" and finding that applicant's "sales figures for 14 years, standing alone and without any context in the trade, are not so impressive as to elevate applicant's highly descriptive designation to the status of a distinctive mark")).[40] We have no information as to whether Applicant's sales are significant when compared to the sales of competitive products, and Applicant's unit sales, which average about 85,000 Contura V actuators and 877,000 rocker switches containing Contura V actuators annually, do not appear to be so substantial on their face as to be persuasive evidence of acquired distinctiveness without such context.

Third, even assuming that Applicant's sales are substantial in the rocker switch actuator industry, "while sales volume figures may demonstrate the growing popularity of the products, mere figures demonstrating successful product sales are not probative of purchaser recognition of a configuration as an indication of source." *Kohler*, 125 USPQ2d 1516 (quoting *Stuart Spector Designs*, 94 USPQ2d at 1572). As discussed above, Applicant's reseller witnesses testified that "[o]f all the actuators/switches we buy/sell/use, the 'Contura V' is one of the most popular/common. In fact, on many occasions, our customers specifically seek/request to use the 'Contura V' design," Parasopoulos Decl. ¶ 10, and that "[o]f all the switches

[40] As noted above, Applicant argues that its sales figures "far exceed[ ] the amount necessary to establish commercial success of the product." 4 TTABVUE 14. Given the fact-intensive nature of the acquired distinctiveness inquiry, there is no absolute figure for sales or advertising above which acquired distinctiveness must be found. The sales figures in the cases cited by Applicant, as well as those here, must be considered in the context of the facts in each case. As noted above, the problem here is that we do not have any such context.

we buy and use, the 'Contura V' is one of the most common. In fact, on many occasions, we/customers specifically seek/request to use the 'Contura V' design." Thrash Decl. ¶ 10. The mere "fact that there was an apparently large consumer demand for [Applicant's actuators and switches] does not permit a finding the public necessarily associated the [actuator] design with" Applicant. *Braun Inc. v. Dynamics Corp. of Am.*, 975 F.2d 815, 24 USPQ2d 1121, 1131 (Fed. Cir. 1992). Applicant's sales instead may simply "reflect the growing popularity of its products, rather than recognition of its applied-for mark[s]." *MK Diamond Prods.*, 2020 USPQ2d at *23.

We find that Applicant's unit sales and aggregate dollar sales figures have little probative value regarding the distinctiveness of its claimed marks under this *Converse* factor.

5. Intentional Copying

Applicant argues that "[a]s further evidence that the applied-for Mark is well-known in the industry and is known to be sourced by [Applicant], there are currently numerous copycats in the marketplace, now that [Applicant's] design patent covering the configuration of the Contura V has expired." 4 TTABVUE 15. Applicant claims that the "fact that multiple manufacturers are now replicating the Contura V design is compelling evidence that the applied-for design has acquired distinctiveness," *id.*, and that this "evidence is even further buttressed by the fact that some of these copycats specifically refer to themselves as 'Carling style' switches." *Id.* The example cited by Applicant is set forth below:

Dongguan Maiyu Electronics Co., Ltd. Guangdong, China

Gold Member Since 2015 Audited Supplier Manufacturer/Factory & Trading Company

Sample Available OEM/ODM Service Factory Tour

Rocker Switch Carling Style Switch Laser Etched Arb

Purchase Qty.: (Pieces)	500-2,999	3,000+
Reference FOB Unit Price:	US $3	US $2.8

Port:	Shenzhen, China
Production Capacity:	100000 Piece/Pieces Per Week
Payment Terms:	T/T, D/P, Western Union, Paypal, Money Gram
Usage:	Electrical Appliance, Machinery, Digital Products, Communication, Vehicle
Standard:	Standard
Lamp:	With Lamp
Color:	White
Certification:	ISO, GS, RoHS, CE
Brand Name:	Maiyu

[41]

Messrs. Wiegard and Loera also testified regarding instances in which consumers had returned defective switches made by others to Applicant. Mr. Wiegard testified that "[o]n multiple occasions, customers have attempted to return what they thought were Carling's switches, but were actually copycat rocker switches. These forged products look like Carling's switches, but upon examination, are inferior products." Wiegard Decl. ¶ 5. In his view, "the fact that these customers are returning these copycat products to Carling clearly shows that these customers associate the design of these actuators with Carling and believe that these forged products come from Carling." Wiegard Decl. ¶ 7. Mr. Loera testified regarding "fake versions of these rocker switches that customers tried to return to Carling," Loera Decl. ¶ 4, and that "the actuators of these fake rocker switches have the same outer design as Carling's switches." Loera Decl. ¶ 6. He opined that "[b]ased on the outer design, at first glance, it is easy to mistake [the switches] for Carling's products." Loera Decl. ¶ 6. Applicant's

[41] September 21, 2019 Response to Office Action at TSDR 427.

reseller witness Mr. Parasopoulos also testified that "[c]ustomers often confuse [Applicant's] brand rocker switches with 'Carling style' switches made in China, and believe that [Applicant's] product is defective because the actuators will not fit all 'Carling style' rocker switches, something they have been lead to believe by resellers marketing those products." Parasopoulos Decl. ¶ 12.

Applicant argues that "[o]f all the evidence Applicant has submitted, this indisputable, intentional copying of the applied-for Mark is perhaps the most compelling of all." *Id.* at 16. The Examining Attorney acknowledges that "Applicant has provided evidence in support of the claim that others intend to style their goods after the Applicant's, however, evidence of intentional copying of a product design is not probative of acquired distinctiveness." 8 TTABVUE 8. He argues that "[w]here the proposed mark is a product design, the copier may be attempting to exploit a desirable product feature, rather than seeking to confuse customers as to the source of the product." *Id.* (quoting *In re Van Valkenburgh*, 97 USPQ2d 1757, 1768 (TTAB 2011)).

The testimony of Applicant's witnesses regarding mistaken product returns is directed to entire rocker switches, not simply the Contura V actuators, Wiegard Decl. ¶ 5; Loera Decl. ¶ 6, and the webpage displaying the "Carling Style Switch" description set forth above refers to the entire switch, not just its actuator.[42] As shown

[42] Applicant's witnesses do not provide specifics as to the number of "copycat" products and the number of their sellers, the number of returns and their trend line, and the like, and they do not provide examples of the "copycat" products that have been mistakenly returned to Applicant. Without reviewing those products, we cannot determine the extent, if any, to which the copying, and the mistaken returns, are attributable to the specific features that

in the application drawings reproduced above, Applicant does not claim trade dress rights in the designs of the entire switches, but rather only in certain features of their actuators. We cannot infer, from what appears to be copying of the various features of the designs of entire switches, not just their actuators, that Applicant has separate and distinct trademark rights in the specific claimed features of the Contura V actuators alone. Even if the copying and the mistaken returns were driven by the similarity in appearance of the "copycat" switches to Applicant's switches, we cannot find from this evidence that the particular features of the actuators for which Applicant seeks registration are recognized as Applicant's marks. *See Kohler*, 125 USPQ2d at 1518 ("We cannot directly infer from the copying of three-dimensional trade dress containing numerous elements, including color, that Applicant has separate and distinct trademark rights in its claimed 'configuration of an engine with an overall cubic design' and 'complementary lines, beveling, and shapes.'"); *In re Odd Sox LLC*, 2019 USPQ2d 370879, *3-4 (TTAB 2019) (because copying was "not limited to the applied-for trade dress alone, it does not show that the copier perceived the trade dress by itself as a source indicator or believed that consumers would rely on the trade dress alone as an indicator of the source of the goods."); *In re Fantasia Distrib., Inc.*, 120 USPQ2d 1137, 1145 (TTAB 2016) (where copying was not limited

---

Applicant seeks to register as opposed to the overall appearance of the switches, or what Mr. Loera describes vaguely as the "same outer design as Carling's switches." Loera Decl. ¶ 6.

to claimed diamond design, Board could not "conclude that it demonstrates the source-indicating nature of the diamond pattern.").[43]

Moreover, although Mr. Peplau testified that Applicant "has actively monitored the market for any copiers of these design configurations," Peplau Decl. ¶ 10, there is no "evidence that Applicant has attempted to stop any such alleged misuse, or to enforce its claimed trademark rights against these or any other third parties," *id.* at *4, even though Applicant laments that following the expiration of the '231 Patent, copycat switches "have been quickly popping up at an alarming rate." 9 TTABVUE 4-5. Applicant's inaction undercuts its claim that the specific features of Applicant's actuators for which registration is sought have acquired distinctiveness. *Cf. In re Serial Podcast, LLC*, 126 USPQ2d 1061, 1078 n.49 (TTAB 2018) (while copying in a word mark case may be significant evidence of acquired distinctiveness, "if left unchecked it can result in the weakening of rights in a mark, or even abandonment.").

We find that Applicant's evidence of copying and product returns has some probative value on the issue of acquired distinctiveness, but lacks the specificity to

[43] The record evidence, including the evidence of the return of entire switches to Applicant, is not inconsistent with the desire of competitors to copy aspects of the overall switch designs to take advantage of "desirable qualities or features," *Odd Sox*, 2019 USPQ2d 370879 at *4, as opposed to an intention to pass off the switches and actuators as Applicant's. For example, the use of the term "Carling Style Switch" on the webpage shown above is not inconsistent with an intention to describe the seller's switch as similar in nature or style to Applicant's, rather than as coming from Applicant itself. A "Basic Info" page regarding that product discusses several product specifications and notes that the switch is sold under the MAIYU mark. September 21, 2019 Response to Office Action at TSDR 427. A webpage for another of the "copycat" products describes the particular switch as an "ARB Style Orange LED Rocker Switch Backlit," *id.* at TSDR 434-35, and states that it is the "[s]ame size as the Carling and ARB switches." *Id.* at TSDR 435. These descriptions of the switches are more consistent with an intent to make a product compatibility or substitutability claim than with a predatory intent to pass off the switches or the actuators as Applicant's.

show that the copying of multiple features of Applicant's switches establishes that the copyists and consumers recognize the specific actuator features for which Applicant seeks registration as Applicant's marks.

6. Summary[44]

"In a product design application, the critical inquiry is whether the product design is being used and advertised in the marketplace in such a manner that consumers associate the product design with a particular applicant, and therefore view the product as emanating from a single source." *In re Koninklijke Philips Elecs. N.V.*, 112 USPQ2d 1177, 1187 (TTAB 2014). Applicant's public-facing use and display of its actuators in a handful of advertisements and catalog pages for its products do nothing to encourage consumers to associate the specific applied-for designs with Applicant. Applicant's evidence regarding purchaser association of its claimed marks with Applicant is too limited in quantity and quality to have significant probative value. Applicant's period of presumed exclusive use of the applied-for designs is too short in the context of the record as a whole to have significant probative value. Applicant's evidence of unit and dollar sales lacks the necessary context to enable us to determine the extent to which the applied-for marks have been exposed to consumers, and, more importantly, the raw figures do not demonstrate the success of those sales in creating an association between Applicant and the applied-for designs. Finally, while Applicant's evidence of copying and mistaken returns of products to Applicant indicates that some features of Applicant's switches have been copied for some reason,

[44] There is no record evidence regarding unsolicited media coverage, the final *Converse* factor.

the record is sufficiently ambiguous as to what features were copied and why to make the evidence of copying insufficient, when considered together with the other evidence in the record, to permit an inference that Applicant's actuator designs alone have acquired distinctiveness and that Applicant has met the high standard for showing acquired distinctiveness.

Decision: The refusals to register are affirmed.