PTO Form 1960 (Rev 9/2007)
OMB No. 0651-0050 (Exp. 07/31/2017)

Request for Reconsideration after Final Action

The table below presents the data as entered.

Input Field	Entered
SERIAL NUMBER	86263453
LAW OFFICE ASSIGNED	LAW OFFICE 102
MARK SECTION	
MARK FILE NAME	http://tmng-al.uspto.gov/resting2/api/img/86263453/large
LITERAL ELEMENT	PIP
STANDARD CHARACTERS	NO
USPTO-GENERATED IMAGE	NO
ARGUMENT(S)	

In response to the Examining Attorney's Final Office Action of February 21, 2015, Applicant respectfully r
reconsideration in light of the following remarks. A Notice of Appeal is being filed concurrently herewith,

As an initial matter, Registrant appears to have abandoned the mark. Specifically, as revealed through on-l
appears that Registrant has not used the mark since around 2006. For example, the mark was apparently la
manuals dating back to mid-2006. One such manual, dated April 2006, is for "Submersible Non-Clog Pum
document number of D4d.1c. *See*
http://www.pacopumps.com/Documentation/IOM/Sewage_NonClog_Type_PIP500.pdf. (Exhibit A.) Anc
dated April 2006, is for "Submersible Sump Pumps," and uses the document number D8d.1b. *See*
http://www.pacopumps.com/Documentation/IOM/Effluent_Sump_Type_Small_Submersible_Sump_Pump
B.) Both manuals indicate that they supersede earlier versions from July 2005. (*See* Exhibit A at 1 & Exhi
Both documents reference "Paco Instant Pumps" (or "PIP," for short). Document D4d.1c (Non-Clog Pump
model numbers PIP500B et seq. (the 500 series), whereas document D8d.1b (Sump Pumps) relates to mode
PIP700C and PIP701C (the 700 series).

However, both of these manuals were superseded by a later version that is entirely devoid of use of the PIP
Specifically, in August 2006, both earlier manuals were combined into a single manual. *See*
http://www.pacopumps.com/Documentation/IOM/Effluent_Sump_Type_Submersible_Sump_Pump.pdf. (
This newer manual entitled, "Installation, Operation and Maintenance Instructions Type NSC & Type SM,"
it encompasses both the non-clog and sump pumps. (Exhibit C at 1.) The new manual has two numbers, D
D8d.3, and indicates that it "Supersedes All" at the top of each page of the manual. Most importantly, the
no longer uses the PIP mark. Rather, Registrant started using "SM" and "NSC," completely abandoning us
Registrant's website (www.pacopumps.com) does not include any reference to "PIP" or products marketed
mark. Applicant is unaware of--and could not find any evidence of--subsequent use of the mark with Paco
after 2006.

While the abandonment of the PIP mark by Registrant obviates any likelihood of confusion, Applicant note Examining Attorney's conclusion otherwise.

First, in comparing the similarity of the marks, the Examining Attorney mistakenly assumed the mark has t meaning for both Applicant and Registrant. (Final Office Action, Page 3.) It does not. PIP is an acronym Applicant and Registrant. For Applicant, the acronym stands for, or meaning associated with PIP is, "Pulsa Products." (*See* Exhibit D.) On the other hand, the meaning associated with Registrant's mark is "Paco In *See* Exhibits A and B, above.) Consumers will necessarily associate such meaning with the mark and, ther little, if any, likelihood of confusion.

Second, the usage of the mark by Registrant is in areas that are unrelated to the uses of the mark by Applica in manuals discussed above, Registrant's mark is used for pumps that are not agricultural in nature at all—a have nothing to do with irrigation. The sump pumps and non-clog pumps of Registrant are used for pumpi remove excess water. This has nothing to do with the irrigation devices. As such, there are no overlapping uses, sales representatives, etc. Consumers of one are unlikely to confuse with the other.

Third, although Applicant agrees with the Examining Attorney that the appropriate test is likelihood of con opposed to actual confusion), the lack of actual confusion is still a strong indicator of an absence of likeliho confusion. *See, e.g., Scott Paper Co. v. Scott's Liquid Gold, Inc.,* 589 F.2d 1225 at 1229 (3d Cir.1978). He mark has been used for over a decade without incident or any allegations of confusion from Registrant or it Applicant has appeared annually at irrigation and agricultural related tradeshows under the name PIP and o under that name—without incident. For example, a search of the Way Back machine shows Applicant liste Exhibitors at the 2003 Irrigation Association show. Applicant appears under the name "PIP Pulsating Irrig Systems," *See* https://web.archive.org/web/20040804015704/http:/www.irrigation.org/show/default.aspx?pg=exbtr_list_2 (Exhibit E.) Clicking on the link for Applicant's name leads to July 28, 2004 archived website belonging featuring the PIP mark prominently. *See* https://web.archive.org/web/20040728052430/http://pulsators.net

Similar archives of Applicant website show extensive use of the mark. *See*
https://web.archive.org/web/20030125201113/http://pulsators.net/ (Exhibit G) (January 25, 2003);
https://web.archive.org/web/20071028194034/http://pulsators.net/ (Exhibit H) (October 28, 2007);
https://web.archive.org/web/20110207172622/http://pippulsators.com/ (Exhibit I) (February 7, 2011)
https://web.archive.org/web/20140104060756/http://pippulsators.com/ (Exhibit J) (January 4, 2014). To th Examining Attorney has any doubts concerning the usage of the mark openly by Applicant during this time Applicant is willing to supply whatever additional corroborating information requested.

Importantly, during this period, there has been no incidents of any confusion between Applicant and Regist marks. None of these has created any confusion. To the best knowledge of Applicant, Registrant has not su opposition or otherwise objected to this application.

With respect to the specimen refusal, Applicant hereby amends the filing basis to intent-to-use under Sectio

In view of the foregoing remarks, Applicant requests favorable reconsideration and passage of the m publication. Applicant believes that Registrant's mark has been abandoned. If necessary, Applicant can in cancellation proceedings, but Applicant believes should be unnecessary because there is also no likelihood between the marks.

EVIDENCE SECTION

EVIDENCE FILE NAME(S)	

ORIGINAL PDF FILE	evi_2324328213-20150821174447634053_._PIP_TM_Response_Attachment.pd
CONVERTED PDF FILE(S) **(53 pages)**	\\TICRS\EXPORT16\IMAGEOUT16\862\634\86263453\xml8\
	\\TICRS\EXPORT16\IMAGEOUT16\862\634\86263453\xml8\
	\\TICRS\EXPORT16\IMAGEOUT16\862\634\86263453\xml8\
	\\TICRS\EXPORT16\IMAGEOUT16\862\634\86263453\xml8\
	\\TICRS\EXPORT16\IMAGEOUT16\862\634\86263453\xml8\
	\\TICRS\EXPORT16\IMAGEOUT16\862\634\86263453\xml8\
	\\TICRS\EXPORT16\IMAGEOUT16\862\634\86263453\xml8\
	\\TICRS\EXPORT16\IMAGEOUT16\862\634\86263453\xml8\
	\\TICRS\EXPORT16\IMAGEOUT16\862\634\86263453\xml8\
	\\TICRS\EXPORT16\IMAGEOUT16\862\634\86263453\xml8\
	\\TICRS\EXPORT16\IMAGEOUT16\862\634\86263453\xml8\
	\\TICRS\EXPORT16\IMAGEOUT16\862\634\86263453\xml8\
	\\TICRS\EXPORT16\IMAGEOUT16\862\634\86263453\xml8\
	\\TICRS\EXPORT16\IMAGEOUT16\862\634\86263453\xml8\
	\\TICRS\EXPORT16\IMAGEOUT16\862\634\86263453\xml8\
	\\TICRS\EXPORT16\IMAGEOUT16\862\634\86263453\xml8\
	\\TICRS\EXPORT16\IMAGEOUT16\862\634\86263453\xml8\
	\\TICRS\EXPORT16\IMAGEOUT16\862\634\86263453\xml8\
	\\TICRS\EXPORT16\IMAGEOUT16\862\634\86263453\xml8\
	\\TICRS\EXPORT16\IMAGEOUT16\862\634\86263453\xml8\
	\\TICRS\EXPORT16\IMAGEOUT16\862\634\86263453\xml8\
	\\TICRS\EXPORT16\IMAGEOUT16\862\634\86263453\xml8\
	\\TICRS\EXPORT16\IMAGEOUT16\862\634\86263453\xml8\
	\\TICRS\EXPORT16\IMAGEOUT16\862\634\86263453\xml8\
	\\TICRS\EXPORT16\IMAGEOUT16\862\634\86263453\xml8\
	\\TICRS\EXPORT16\IMAGEOUT16\862\634\86263453\xml8\
	\\TICRS\EXPORT16\IMAGEOUT16\862\634\86263453\xml8\
	\\TICRS\EXPORT16\IMAGEOUT16\862\634\86263453\xml8\

	\\TICRS\EXPORT16\IMAGEOUT16\862\634\86263453\xml8\
	\\TICRS\EXPORT16\IMAGEOUT16\862\634\86263453\xml8\
	\\TICRS\EXPORT16\IMAGEOUT16\862\634\86263453\xml8\
	\\TICRS\EXPORT16\IMAGEOUT16\862\634\86263453\xml8\
	\\TICRS\EXPORT16\IMAGEOUT16\862\634\86263453\xml8\
	\\TICRS\EXPORT16\IMAGEOUT16\862\634\86263453\xml8\
	\\TICRS\EXPORT16\IMAGEOUT16\862\634\86263453\xml8\
	\\TICRS\EXPORT16\IMAGEOUT16\862\634\86263453\xml8\
	\\TICRS\EXPORT16\IMAGEOUT16\862\634\86263453\xml8\
	\\TICRS\EXPORT16\IMAGEOUT16\862\634\86263453\xml8\
	\\TICRS\EXPORT16\IMAGEOUT16\862\634\86263453\xml8\
	\\TICRS\EXPORT16\IMAGEOUT16\862\634\86263453\xml8\
	\\TICRS\EXPORT16\IMAGEOUT16\862\634\86263453\xml8\
	\\TICRS\EXPORT16\IMAGEOUT16\862\634\86263453\xml8\
	\\TICRS\EXPORT16\IMAGEOUT16\862\634\86263453\xml8\
	\\TICRS\EXPORT16\IMAGEOUT16\862\634\86263453\xml8\
	\\TICRS\EXPORT16\IMAGEOUT16\862\634\86263453\xml8\
	\\TICRS\EXPORT16\IMAGEOUT16\862\634\86263453\xml8\
	\\TICRS\EXPORT16\IMAGEOUT16\862\634\86263453\xml8\
	\\TICRS\EXPORT16\IMAGEOUT16\862\634\86263453\xml8\
	\\TICRS\EXPORT16\IMAGEOUT16\862\634\86263453\xml8\
	\\TICRS\EXPORT16\IMAGEOUT16\862\634\86263453\xml8\
	\\TICRS\EXPORT16\IMAGEOUT16\862\634\86263453\xml8\
	\\TICRS\EXPORT16\IMAGEOUT16\862\634\86263453\xml8\
DESCRIPTION OF EVIDENCE FILE	Web content printouts in support of arguments
GOODS AND/OR SERVICES SECTION (current)	
INTERNATIONAL CLASS	011
DESCRIPTION	Agricultural irrigation units, not including pumps

FILING BASIS	Section 1(a)
FIRST USE ANYWHERE DATE	At least as early as 11/06/2013
FIRST USE IN COMMERCE DATE	At least as early as 11/06/2013
GOODS AND/OR SERVICES SECTION (proposed)	
INTERNATIONAL CLASS	011
DESCRIPTION	Agricultural irrigation units, not including pumps
FILING BASIS	Section 1(b)
SIGNATURE SECTION	
DECLARATION SIGNATURE	The filing Attorney has elected not to submit the signed declara no supporting declaration is required under the *Trademark Rule*
RESPONSE SIGNATURE	/Ann McCamey/
SIGNATORY'S NAME	Ann McCamey
SIGNATORY'S POSITION	Attorney of record, New York bar member
SIGNATORY'S PHONE NUMBER	(424) 644-7800
DATE SIGNED	08/21/2015
AUTHORIZED SIGNATORY	YES
CONCURRENT APPEAL NOTICE FILED	YES
FILING INFORMATION SECTION	
SUBMIT DATE	Fri Aug 21 17:53:50 EDT 2015
TEAS STAMP	USPTO/RFR-23.243.28.213-20150821175350169299-86263453-540a76c31146f289bff164270f9c772c628719599a9376cf29eb8912e2d4b6e0-N/A-N/A-20150821174447634053

PTO Form 1960 (Rev 9/2007)
OMB No. 0651-0050 (Exp. 07/31/2017)

Request for Reconsideration after Final Action

To the Commissioner for Trademarks:

Application serial no. **86263453** PIP (Stylized and/or with Design, see http://tmng-al.uspto.gov/resting2/api/img/86263453/large) has been amended as follows:

ARGUMENT(S)
In response to the substantive refusal(s), please note the following:

In response to the Examining Attorney's Final Office Action of February 21, 2015, Applicant respectfully requests reconsideration in light of the following remarks. A Notice of Appeal is being filed concurrently herewith, via ESTTA.

As an initial matter, Registrant appears to have abandoned the mark. Specifically, as revealed through on-line searches, it appears that Registrant has not used the mark since around 2006. For example, the mark was apparently last used in two manuals dating back to mid-2006. One such manual, dated April 2006, is for "Submersible Non-Clog Pumps," with a document number of D4d.1c. *See* http://www.pacopumps.com/Documentation/IOM/Sewage_NonClog_Type_PIP500.pdf. (Exhibit A.) Another manual, dated April 2006, is for "Submersible Sump Pumps," and uses the document number D8d.1b. *See* http://www.pacopumps.com/Documentation/IOM/Effluent_Sump_Type_Small_Submersible_Sump_Pump. (Exhibit B.) Both manuals indicate that they supersede earlier versions from July 2005. (*See* Exhibit A at 1 & Exhibit B at 1.) Both documents reference "Paco Instant Pumps" (or "PIP," for short). Document D4d.1c (Non-Clog Pumps) relates to model numbers PIP500B et seq. (the 500 series), whereas document D8d.1b (Sump Pumps) relates to model numbers PIP700C and PIP701C (the 700 series).

However, both of these manuals were superseded by a later version that is entirely devoid of use of the PIP mark. Specifically, in August 2006, both earlier manuals were combined into a single manual. *See* http://www.pacopumps.com/Documentation/IOM/Effluent_Sump_Type_Submersible_Sump_Pump.pdf. (Exhibit C.) This newer manual entitled, "Installation, Operation and Maintenance Instructions Type NSC & Type SM," indicates that it encompasses both the non-clog and sump pumps. (Exhibit C at 1.) The new manual has two numbers, D4d.3 and D8d.3, and indicates that it "Supersedes All" at the top of each page of the manual. Most importantly, the new document no longer uses the PIP mark. Rather, Registrant started using "SM" and "NSC," completely abandoning use of the PIP. Registrant's website (www.pacopumps.com) does not include any reference to "PIP" or products marketed under that mark. Applicant is unaware of--and could not find any evidence of--subsequent use of the mark with Paco pump products after 2006.

While the abandonment of the PIP mark by Registrant obviates any likelihood of confusion, Applicant notes errors in the Examining Attorney's conclusion otherwise.

First, in comparing the similarity of the marks, the Examining Attorney mistakenly assumed the mark has the identical meaning for both Applicant and Registrant. (Final Office Action, Page 3.) It does not. PIP is an acronym for both Applicant and Registrant. For Applicant, the acronym stands for, or meaning associated with PIP is, "Pulsating Irrigation Products." (*See* Exhibit D.) On the other hand, the meaning associated with Registrant's mark is "Paco Instant Pump." (*See* Exhibits A and B, above.) Consumers will necessarily associate such meaning with the mark and, therefore, there is little, if any, likelihood of confusion.

Second, the usage of the mark by Registrant is in areas that are unrelated to the uses of the mark by Applicant. As shown in manuals discussed above, Registrant's mark is used for pumps that are not agricultural in nature at all—and certainly have nothing to do with irrigation. The sump pumps and non-clog pumps of Registrant are used for pumping water to remove excess water. This has nothing to do with the irrigation devices. As such, there are no overlapping customers, uses, sales representatives, etc. Consumers of one are unlikely to confuse with the other.

Third, although Applicant agrees with the Examining Attorney that the appropriate test is likelihood of confusion (as opposed to actual confusion), the lack of actual confusion is still a strong indicator of an absence of likelihood of confusion. *See, e.g., Scott Paper Co. v. Scott's Liquid Gold, Inc.*, 589 F.2d 1225 at 1229 (3d Cir.1978). Here, Applicant's mark has been used for over a decade without incident or any allegations of confusion from Registrant or its customers. Applicant has appeared annually at irrigation and agricultural related tradeshows under the name PIP and offered products under that name—without incident. For example, a search of the Way Back machine shows Applicant listed among the Exhibitors at the 2003 Irrigation Association show. Applicant appears under the name "PIP Pulsating Irrigation Systems," *See* https://web.archive.org/web/20040804015704/http:/www.irrigation.org/show/default.aspx?pg=exbtr_list_20 (Exhibit E.) Clicking on the link for Applicant's name leads to July 28, 2004 archived website belonging to applicant, featuring the PIP mark prominently. *See* https://web.archive.org/web/20040728052430/http://pulsators.net/ (Exhibit F).

Similar archives of Applicant website show extensive use of the mark. *See* https://web.archive.org/web/20030125201113/http://pulsators.net/ (Exhibit G) (January 25, 2003); https://web.archive.org/web/20071028194034/http://pulsators.net/ (Exhibit H) (October 28, 2007); https://web.archive.org/web/20110207172622/http://pippulsators.com/ (Exhibit I) (February 7, 2011) https://web.archive.org/web/20140104060756/http://pippulsators.com/ (Exhibit J) (January 4, 2014). To the extent Examining Attorney has any doubts concerning the usage of the mark openly by Applicant during this time period, Applicant is willing to supply whatever additional corroborating information requested.

Importantly, during this period, there has been no incidents of any confusion between Applicant and Registrant or their marks. None of these has created any confusion. To the best knowledge of Applicant, Registrant has not submitted any opposition or otherwise objected to this application.

With respect to the specimen refusal, Applicant hereby amends the filing basis to intent-to-use under Section 1(b).

In view of the foregoing remarks, Applicant requests favorable reconsideration and passage of the mark to publication. Applicant believes that Registrant's mark has been abandoned. If necessary, Applicant can initiate cancellation proceedings, but Applicant believes should be unnecessary because there is also no likelihood of confusion between the marks.

EVIDENCE

Evidence in the nature of Web content printouts in support of arguments has been attached.

Original PDF file:

evi_2324328213-20150821174447634053_._PIP_TM_Response_Attachment.pdf

Converted PDF file(s) (53 pages)

Evidence-1
Evidence-2
Evidence-3
Evidence-4
Evidence-5
Evidence-6
Evidence-7

Evidence-8
Evidence-9
Evidence-10
Evidence-11
Evidence-12
Evidence-13
Evidence-14
Evidence-15
Evidence-16
Evidence-17
Evidence-18
Evidence-19
Evidence-20
Evidence-21
Evidence-22
Evidence-23
Evidence-24
Evidence-25
Evidence-26
Evidence-27
Evidence-28
Evidence-29
Evidence-30
Evidence-31
Evidence-32
Evidence-33
Evidence-34
Evidence-35
Evidence-36
Evidence-37
Evidence-38
Evidence-39
Evidence-40
Evidence-41
Evidence-42
Evidence-43
Evidence-44
Evidence-45
Evidence-46
Evidence-47
Evidence-48
Evidence-49
Evidence-50
Evidence-51
Evidence-52
Evidence-53

CLASSIFICATION AND LISTING OF GOODS/SERVICES
Applicant proposes to amend the following class of goods/services in the application:
Current: Class 011 for Agricultural irrigation units, not including pumps
Original Filing Basis:
Filing Basis: Section 1(a), Use in Commerce: The applicant is using the mark in commerce, or the applicant's related company or licensee is using the mark in commerce, on or in connection with the identified goods and/or services. 15 U.S.C. Section 1051(a), as amended. The mark was first used at least as early as 11/06/2013 and first used in commerce at least as early as 11/06/2013 , and is now in use in such commerce.

Proposed: Class 011 for Agricultural irrigation units, not including pumps
Deleted Filing Basis: 1(a)
Filing Basis: Section 1(b), Intent to Use: ***For a trademark or service mark application:*** As of the application filing date, the applicant had a bona fide intention, and was entitled, to use the mark in commerce on or in connection with the identified goods/services in the application. ***For a collective trademark, collective service mark, or collective membership mark application:*** As of the application filing date, the applicant had a bona fide intention, and was entitled, to exercise legitimate control over the use of the mark in commerce by members on or in connection with the identified goods/services/collective membership organization. ***For a certification mark application:*** As of the application filing date, the applicant had a bona fide intention, and was entitled, to exercise legitimate control over the use of the mark in commerce by authorized users in connection with the identified goods/services, and the applicant will not engage in the production or marketing of the goods/services to which the mark is applied, except to advertise or promote recognition of the certification program or of the goods/services that meet the certification standards of the applicant.

SIGNATURE(S)
Declaration Signature
I hereby elect to bypass the submission of a signed declaration, because I believe a declaration is not required by the rules of practice. I understand that the examining attorney could still, upon later review, require a signed declaration.
Request for Reconsideration Signature
Signature: /Ann McCamey/ Date: 08/21/2015
Signatory's Name: Ann McCamey
Signatory's Position: Attorney of record, New York bar member

Signatory's Phone Number: (424) 644-7800

The signatory has confirmed that he/she is an attorney who is a member in good standing of the bar of the highest court of a U.S. state, which includes the District of Columbia, Puerto Rico, and other federal territories and possessions; and he/she is currently the owner's/holder's attorney or an associate thereof; and to the best of his/her knowledge, if prior to his/her appointment another U.S. attorney or a Canadian attorney/agent not currently associated with his/her company/firm previously represented the owner/holder in this matter: (1) the owner/holder has filed or is concurrently filing a signed revocation of or substitute power of attorney with the USPTO; (2) the USPTO has granted the request of the prior representative to withdraw; (3) the owner/holder has filed a power of attorney appointing him/her in this matter; or (4) the owner's/holder's appointed U.S. attorney or Canadian attorney/agent has filed a power of attorney appointing him/her as an associate attorney in this matter.

The applicant is filing a Notice of Appeal in conjunction with this Request for Reconsideration.

Serial Number: 86263453
Internet Transmission Date: Fri Aug 21 17:53:50 EDT 2015
TEAS Stamp: USPTO/RFR-23.243.28.213-20150821175350169299-86263453-540a76c31146f289bff164270f9c772c628719599a9376cf29eb8912e2d4b6e0-N/A-N/A-20150821174447634053

EXHIBIT

A

D4d.1c
4/06
Supersedes 7/05

PACO® PUMPS

INSTALLATION, OPERATION AND MAINTENANCE INSTRUCTIONS

PACO INSTANT PUMPS

Submersible Non-Clog Pumps

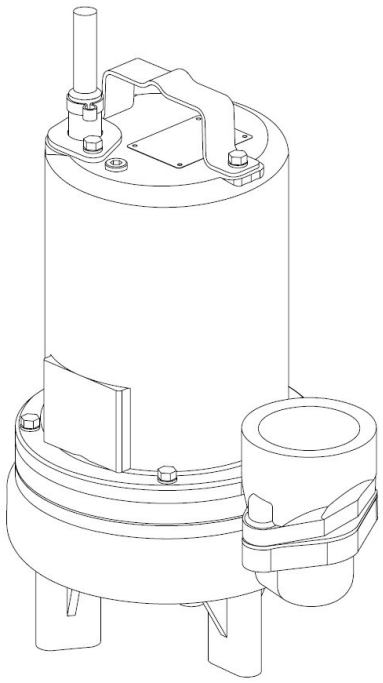

Series:

PIP500B
PIP501B
PIP520B
PIP521B
PIP502B
PIP522B
PIP523B
PIP503B
PIP524B
PIP525B

IMPORTANT! *Read all instructions in this manual before operating pump. As a result of constant product improvement program, product changes may occur. As such Grundfos CBS, Inc. reserves the right to change product without prior written notification.*

Form No. 108037-Rev. J

SAFETY FIRST!

Please Read This Before Installing Or Operating Pump. This information is provided for **SAFETY** and to **PREVENT EQUIPMENT PROBLEMS.** To help recognize this information, observe the following symbols:

IMPORTANT! Warns about hazards that can result in personal injury orIndicates factors concerned with assembly, installation, operation, or maintenance which could result in damage to the machine or equipment if ignored.

CAUTION! Warns about hazards that **can or will cause minor** personal injury or property damage if ignored. Used with symbols below.

WARNING! Warns about hazards that can or will cause serious personal injury, death, or major property damage if ignored. Used with symbols below.

Hazardous fluids can cause fire or explosions, burnes or death could result.

Extremely hot - Severe burnes can occur on contact.

Biohazard can cause serious personal injury.

Hazardous fluids can Hazardous pressure, eruptions or explosions could cause personal injury or property damage.

Rotating machinery Amputation or severe laceration can result.

Hazardous voltage can shock, burn or cause death.

Only qualified personnel should install, operate and repair pump. Any wiring of pumps should be performed by a qualified electrician.

WARNING ! To reduce risk of electrical shock, pumps and control panels must be properly grounded in accordance with the National Electric Code (NEC) or the Canadian Electrical Code (CEC) and all applicable state, province, local codes and ordinances. Improper grounding voids warranty.

WARNING! To reduce risk of electrical shock, always disconnect the pump from the power source before handling or servicing. Lock out power and tag.

WARNING! Operation against a closed discharge valve will cause premature bearing and seal failure on any pump, and on end suction and self priming pump the heat build may cause the generation of steam with resulting dangerous pressures. It is recommended that a high case temperature switch or pressure relief valve be installed on the pump body.

CAUTION ! Never operate a pump with a plug-in type power cord without a ground fault circuit interrupter.

CAUTION ! Pumps build up heat and pressure during operation-allow time for pumps to cool before handling or servicing.

WARNING ! Do not pump hazardous materials (flammable, caustic, etc.) unless the pump is specifically designed and designated to handle them.

CAUTION ! Do not block or restrict discharge hose, as discharge hose may whip under pressure.

WARNING ! Do not wear loose clothing that may become entangled in moving parts.

WARNING ! Keep clear of suction and discharge openings. **DO NOT** insert fingers in pump with power connected.

Always wear eye protection when working on pumps.

Make sure lifting handles are securely fastened each time before lifting. **DO NOT** operate pump without safety devices in place. Always replace safety devices that have been removed during service or repair. Secure the pump in its operating position so it can not tip over, fall or slide.

DO NOT exceed manufacturers recommendation for maximum performance, as this could cause the motor to overheat.

DO NOT remove cord and strain relief. **DO NOT** connect conduit to pump.

WARNING ! Cable should be protected at all times to avoid punctures, cut, bruises and abrasions. Inspect frequently. Never handle connected power cords with wet hands.

WARNING ! To reduce risk of electrical shock, all wiring and junction connections should be made per the NEC or CEC and applicable state or province and local codes. Requirements may vary depending on usage and location.

WARNING! Submersible Pumps are not approved for use in swimming pools, recreational water installations decorative fountains or any installation where human contact with the pumped fluid is common.

WARNING! Products returned must be cleaned, sanitized, or decontaminated as necessary prior to shipment, to insure that employees will not be exposed to health hazards in handling said material. All Applicable Laws And Regulations Shall Apply.

Bronze/brass and bronze/brass fitted pumps may contain lead levels higher than considered safe for potable water systems. Lead is known to cause cancer and birth defects or other reproductive harm. Various government agencies have determined that leaded copper alloys should not be used in potable water applications. For non-leaded copper alloy materials of construction, please contact factory.

PACO® Pumps is not responsible for losses, injury, or death resulting from a failure to observe these safety precautions, misuse or abuse of pumps or equipment.

Other brand and product names are trademarks or registered trademarks of their respective holders.
2000, 2001, 2002, 5/05, 7/05, 4/06 Alteration Rights Reserved

PUMP SPECIFICATIONS:

DISCHARGE ..... 3" NPT, Female, Vertical
LIQUID TEMPERATURE .... 104°F (40°C) Continuous
VOLUTE ..... Cast Iron ASTM A-48, Class 30
MOTOR HOUSING ..... Cast Iron ASTM A-48, Class 30
SEAL PLATE ..... Cast Iron ASTM A-48, Class 30
IMPELLER:
Design ..... 2 vane, Open with pump out vanes on back side. Balanced, ISO G6.3
Material ..... Cast Iron ASTM A-48, Class 30
SHAFT ..... 416 Stainless Steel
O-RINGS ..... Buna-N
HARDWARE ..... 300 Series Stainless Steel
PAINT ..... Air dry enamel
SEAL *Design* ..... Single Mechanical
Material ..... Rotating Face - Carbon
Stationary Face - Ceramic
Elastomer - Buna-N
Hardware - 300 series stainless steel

CORD ENTRY ..... 15Ft. (4.5m) Cord. Plug on 120 Volt, Quick Connect, Custom Molded for sealing and strain relief
UPPER BEARING:
Design ..... Single Row, Ball, Oil Lubricated
Load ..... Radial
LOWER BEARING:
Design ..... Single Row, Ball, Oil Lubricated
Load ..... Radial & Thrust
MOTOR: *Design* ..... NEMA L - Single Phase, NEMA B Three Phase Torque Curve. Oil Filled Squirrel Cage Induction
Insulation ..... Class B
SINGLE PHASE ..... Permanent Split Capacitor (PSC) Includes Overload Protection in Motor
THREE PHASE ..... Tri Voltage 200-240/480. Requires Overload Protection to be Included in Control Panel

MODEL NO	HP	VOLT/PH	Hz	RPM (Nom)	NEMA START CODE	FULL LOAD AMPS	LOCKED ROTOR AMPS	CORD SIZE	CORD TYPE	CORD SIZE	WINDING RESISTANCE		
											Emerson Main-Start	Franklin Main-Start	G.E. Main-Start
PIP500B	0.5	120/1	60	1750	F	11.6	21.3	14/3	SJTOW	0.375	-----	------	1.51-16.1
PIP501B	0.5	240/1	60	1750	J	5.9	14.9	14/3	SOW	0.530	3.38-9.30	-----	5.69-18.74
PIP520B	0.5	200-240/3	60	1750	H/L	3.2/3.0	9.8/11.0	14/4	SOW	0.570	10.2	13.0	-----
PIP521B	0.5	480/3	60	1750	K	1.5	5.3	14/4	SOW	0.570	40.8	52.0	-----
PIP502B	0.75	200-240/1	60	1750	G/K	7.4/7.0	21.5/25.8	14/3	SOW	0.530	1.86-10.2	-----	2.74-10.56
PIP522B	0.75	200-240/3	60	1750	H/K	4.8/4.5	13.7/15.4	14/4	SOW	0.570	-----	5.49	6.28
PIP523B	0.75	480/3	60	1750	K	2.2	7.7	14/4	SOW	0.570	-----	21.96	24.51
PIP503B	1.0	200-240/1	60	1750	D/G	8.8/8.3	21.5/25.8	14/3	SOW	0.530	1.86-10.2	-----	2.74-10.56
PIP524B	1.0	200-240/3	60	1750	E/H	5.14/4.9	13.7/15.4	14/4	SOW	0.570	-----	5.49	6.28

Winding Resistance ± 5%. Pump rated for operation at ± 10% voltage at motor.

FIGURE 1

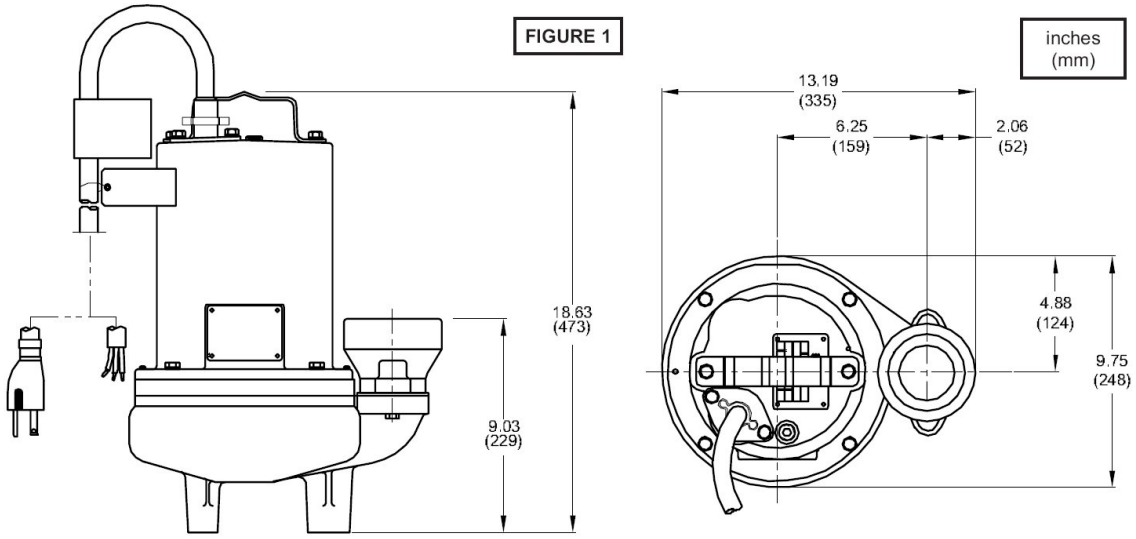

PUMP MODEL NO. _____

PUMP SERIAL NO. _____

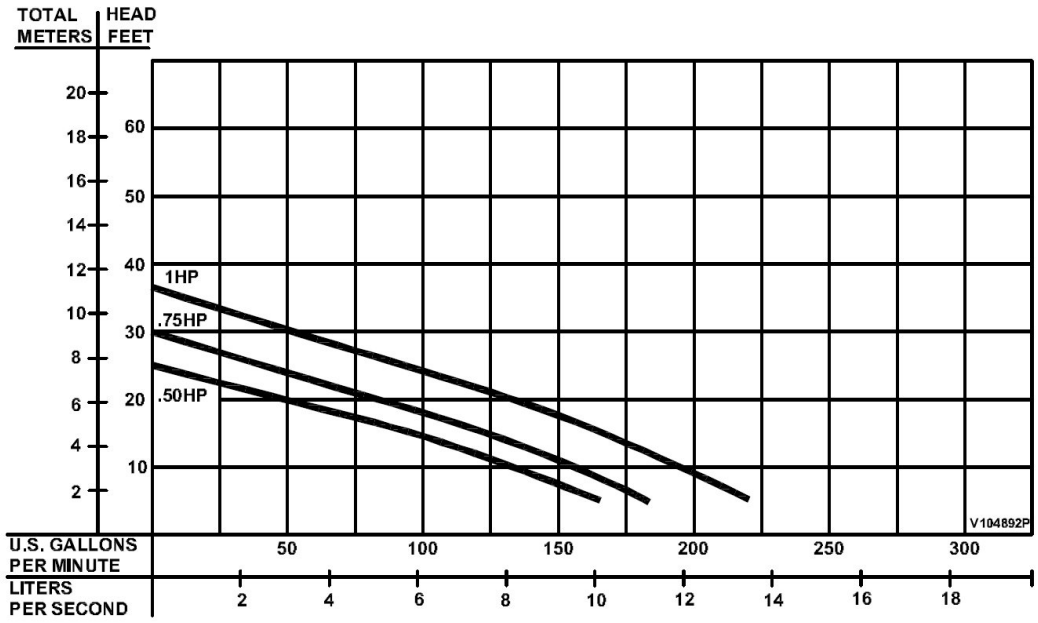

Testing is performed with water, specific gravity of 1.0 @ 68° F, other fluids may vary performance

SECTION B: GENERAL INFORMATION

B-1) To The Purchaser:

Your new Submersible Pump is constructed of the best available materials and is designed to give you many years of service with a minimum of attention.

This manual will provide helpful information concerning installation, maintenance, and proper service guidelines. Check local codes and requirements before installation. Servicing should be performed by knowledgeable pump service contractors or authorized service stations. The pump is packaged ready for installation and no connections or adjustments are necessary except for attaching discharge piping and connecting service cord.

B-2) Receiving:

Upon receiving the pump, it should be inspected for damage or shortages. If damage has occurred, file a claim immediately with the company that delivered the pump. If the manual is removed from the crating, **DO NOT** lose or misplace.

SECTION C: INSTALLATION

C-1) Location:

These pumping units are self-contained and are recommended for use in a sump, lift station or basin. The sump, lift station or basin shall be vented in accordance with local plumbing codes. **This pump is designed to pump sewage, effluent, or other nonexplosive or noncorrosive wastewater. and shall NOT be installed in locations classified as hazardous in accordance with the National Electrical Code (NEC), ANSI/ NFPA 70 or the Canadian Electrical Code (CEC).**

Never install the pump in a trench, ditch or hole with a dirt bottom; the legs will sink into the dirt and the suction will become plugged.

C-1.1) Submergence:

It is recommended that the pump be operated in the submerged condition and the sump liquid level should never be less than 10 inches above the pump bottom (see Figure 2).

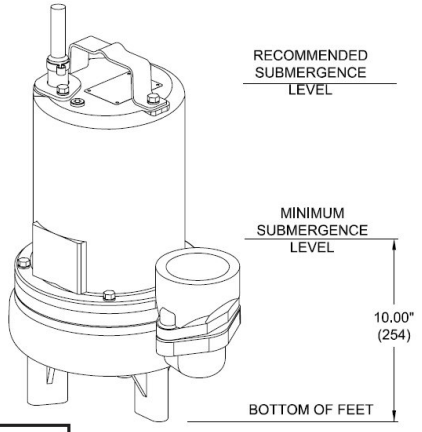

FIGURE 2

C-2) Discharge:

Discharge piping should be as short as possible. Both a check valve and a shut-off valve are recommended for each pump being used. The check valve is used to prevent backflow into the sump. Excessive backflow can cause flooding and/or damage to the pump. The shut-off valve is used to stop system flow during pump or check valve servicing.

C-3) Liquid Level Controls (Not Included with Pump):
The level controls are to be supported by a mounting bracket that is attached to the sump wall, cover or junction box. Be certain that the level controls cannot hang up or foul in it's swing and that the pump is completely submerged when the level control is in the "Off" mode.

Figure 3 shows a typical connection for 120 volt pumps with piggy-back plug and a wide angle float. For manual and automatic operations.

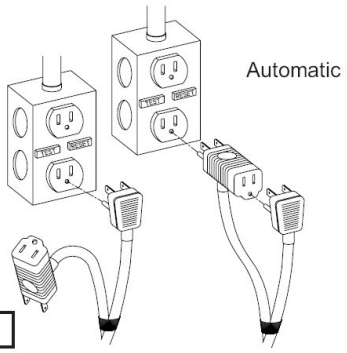

FIGURE 3

Automatic - Plug float cord into outlet, then plug pump cord into float cord.
Manual - Plug pump cord directly into outlet.

C-4) Electrical Connections:
An acceptable motor control switch shall be provided at the time of installation.

C-4.1) Power Cable:
The cord assembly mounted to the pump must not be modified in any way except for shortening to a specific application. Any splice between the pump and the control panel must be made in accordance with all applicable electric codes. It is recommended that a junction box, if used, be mounted outside the sump or be of at least Nema 4 (EEMAC-4) construction if located within the wet well. **Do not use the power cable to lift pump. NOTE: The white wire is NOT a neutral or ground lead, but a power carrying conductor.**

C-4.2) Overload Protection :
Single Phase - The type of in-winding overload protector used is referred to as an inherent overheating protector and operates on the combined effect of temperature and current. This means that the overload protector will trip out and shut the pump off if the windings become too hot, or the load current passing through them becomes too high. It will then automatically reset and start the pump up after the motor cools to a safe temperature.

In the event of an overload, the source of this condition should be determined and rectified immediately. **DO NOT LET THE PUMP CYCLE OR RUN IF AN OVERLOAD CONDITION OCCURS !**

If current through the temperature sensor exceeds the values listed, an intermediate control circuit relay must be used to reduce the current or the sensor will not work properly.

TEMPERATURE SENSOR ELECTRICAL RATINGS		
Volts	**Continuous Amperes**	**Inrush Amperes**
110-120	3.00	30.0
220-240	1.50	15.0
440-480	0.75	7.50

C-4.3) Wire Size:
Consult a qualified electrician for proper wire size if additional power cable length is required. See table on page 3 for electrical information.

SECTION: D START-UP OPERATION

D-1) Check Voltage and Phase:
Before operating pump, compare the voltage and phase information stamped on the pump's identification plate to the available power.

D-2) Check Pump Rotation:
Before putting pump into service for the first time, the motor rotation must be checked. Improper motor rotation can result in poor pump performance and can damage the motor and/or pump. To check the rotation, suspend the pump freely, momentarily apply power and observe the "kickback". "Kickback" should always be in a counter-clockwise direction as viewed from the top of the pump motor housing.

D-2.1) Incorrect Rotation for Three-Phase Pumps:
In the event that the rotation is incorrect for a three-phase installation, interchange any two power cable leads at the control box. **DO NOT** change leads in the cable housing in the motor. Recheck the "kickback" rotation again by momentarily applying power.

D-2.2) Incorrect Rotation for Single-Phase Pumps:
In the unlikely event that the rotation is incorrect for a single phase pump, contact a PACO PUMPS Service Center.

D-3) Identification Plate:
Record the numbers from the pump's identification plate for future reference.

D-4) Insulation Test:
Before the pump is put into service, an insulation (megger) test should be performed on the motor. The resistance values (ohms) as well as the voltage (volts) and current (amps) should be recorded.

D-5) Pump-Down Test:
After the pump has been properly wired and lowered into the basin, sump or lift station, it is advisable to check the system by filling with liquid and allowing the pump to operate through it's pumping cycle. The time needed to empty the system, or pump-down time along with the volume of water, should be recorded.

ECTION E: PREVENTATIVE MAINTENANCE
As the motor is oil filled, no lubrication or other maintenance is required, and generally will give very reliable service and can be expected to operate for years on normal sewage pumping without failing. However as with any mechanical piece of equipment a preventive maintenance program is recommended and suggested to include the following checks:

1) Inspect motor chamber for oil level and contamination and repair as required per section F-1.
2) Inspect impeller and body for excessive build-up or clogging and repair as required per section F-2.
3) Inspect motor and bearings and replace as required per section F-3.
4) Inspect seal for wear or leakage and repair as required per section F-4.

SECTION F: SERVICE AND REPAIR
NOTE: All item numbers in ( ) refer to Figure 15.

F-1) Lubrication:
Anytime the pump is removed from operation, the cooling oil in the motor housing (5) should be checked visually for oil level and contamination.

F-1.1) Checking Oil:
Motor Housing- To check oil, set unit upright. Remove pipe plug (27) from housing (5). With a flashlight, visually inspect the oil in the motor housing (5) to make sure it is clean and clear, light amber in color and free from suspended particles. Milky white oil indicates the presence of water. Oil level should be just above the motor when pump is in vertical position.

F-1.2) Testing Oil:
1.) Place pump on it's side, remove pipe plug (27), from motor housing (5) and drain oil into a clean, dry container.
2.) Check oil for contamination using an oil tester with a range to 30 Kilovolts breakdown.
3.) If oil is found to be clean and uncontaminated (measuring above 15 KV. breakdown), refill the motor housing as per section F-1.4.
4.) If oil is found to be dirty or contaminated (or measures below 15 KV. breakdown), the the pump must be carefully inspected for leaks at the shaft seal (24), cable assembly (13), square ring (23) and pipe plug (27), before refilling with oil. To locate the leak, perform a pressure test as per section F-1.3. After leak is repaired, dispose of old oil properly, and refill with new oil as per section F-1.4.

F-1.3) Pressure Test:
Pumps that have been disassembled, Motor Housing:
If the pump has been disassembled, the oil should be drained before a pressure test, as described in section F-1.1. Remove pipe plug (27) from motor housing (5). Apply pipe sealant to pressure gauge assembly and tighten into hole
(See Figure 4).

Pressurize motor housing to 10 P.S.I. Use soap solution around the sealed areas and inspect joints for "air bubbles". If, after five minutes, the pressure is still holding constant, and no "bubbles" are observed, slowly bleed the pressure and remove the gauge assembly. Replace oil as described in section F-1.4. If the pressure does not hold, then the leak must be located and repaired.

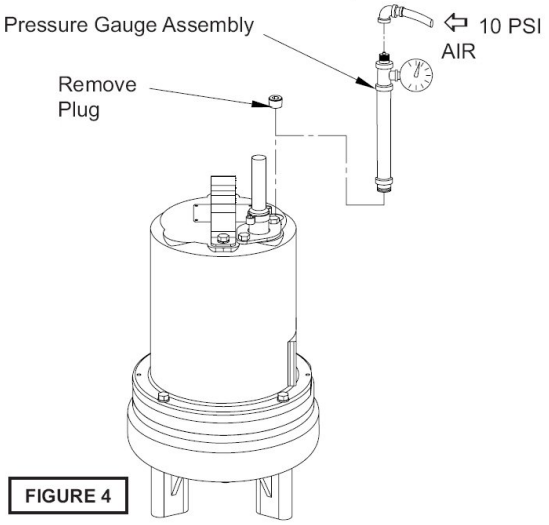

FIGURE 4

CAUTION ! - Pressure builds up extremely fast, increase pressure by "TAPPING" air nozzle. Too much pressure will damage seal. DO NOT exceed 10 P.S.I.

Pumps that have NOT been disassembled, Motor Housing:
The pressure test may be done with the oil at its normal level. Remove pipe plug (27) from motor housing (5). Apply pipe sealant to pressure gauge assembly and tighten into hole (see Figure 4). Pressurize motor housing to 10 P.S.I. Use soap solution around the sealed areas above the oil level and inspect joints for "air bubbles". For sealed areas below the oil level, leaks will seep oil.

If, after five minutes, the pressure is still holding constant, and no "bubbles"/oil seepage is observed, slowly bleed the pressure and remove the gauge assembly. If the pressure does not hold, then the leak must be located and repaired.

F-1.4) Replacing Oil:
Motor Housing - Set unit upright and refill with new cooling oil as per Table 1 (see parts list for amount). Fill to just above motor as an air space must remain in the top of the motor housing to compensate for oil expansion. Apply pipe thread compound to threads of pipe plug (27) then assemble to motor housing (5).

IMPORTANT! - For single phase units, oil level should be below capacitor.

WARNING ! - DO NOT overfill oil. Overfilling of motor housing with oil can create excessive and dangerous hydraulic pressure which can destroy the pump and create a hazard. Overfilling oil voids warranty.

TABLE 1 - COOLING OIL - Dielectric	
SUPPLIER	**GRADE**
BP	Enerpar SE100
Conoco	Pale Paraffin 22
Mobile	D.T.E. Oil Light
G & G Oil	Circulating 22
Imperial Oil	Voltesso-35
Shell Canada	Transformer-10
Texaco	Diala-Oil-AX
Woco	Premium 100

F-2) Impeller and Volute Service:

F-2.1) Disassembly and Inspection:
To clean out volute (1) or replace impeller (25), disconnect power, remove hex bolts (22), and lockwashers (11), vertically lift motor and seal plate assembly from volute (1) see Figure 5. Clean out body if necessary. Clean and examine impeller (25), for pitting or wear and replace if required, inspect gasket (26) and replace if cut or damaged. If the impeller (25) needs replacing, place a flat screwdriver in the slot of the end of the shaft to hold the shaft stationary while unscrewing the impeller (25).

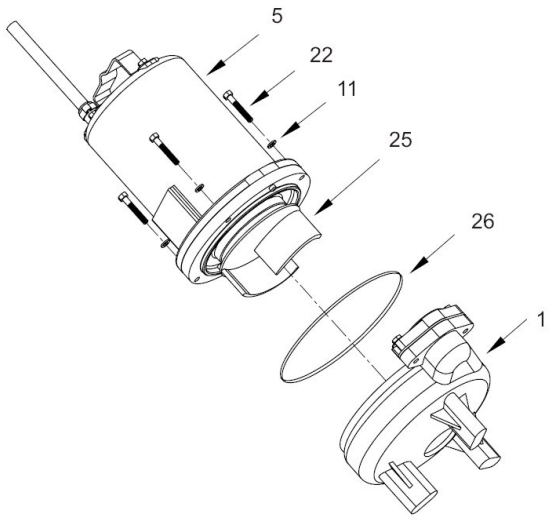

FIGURE 5

F-2.2) Reassembly:
To install impeller (25), clean the threads with thread locking compound cleaner. Apply removable Loctite® 609 or equivalent to shaft threads. Screw impeller onto the shaft hand tight while using a screwdriver in the slot at the end of the shaft to hold it stationary. It is important that the spring of the lower shaft seal (24) seats in the hub of the impeller (25). Rotate impeller to check for binding. Position gasket (26) on volute flange and position impeller and motor housing on volute (1). Position lockwasher (11) on cap screw (22) and screw into volute (1). Torque to 100 in-lbs. Check for free rotation of motor and impeller.

F-3) Shaft Seal Service:

CAUTION ! - handle seal parts with extreme care. DO NOT scratch or mar lapped surfaces.

F-3.1) Disassembly and Inspection:
To expose shaft seal (24) for examination, disassemble volute and impeller as outlined in paragraph F-2.1. If further repair is required, remove retaining ring (24d), spring (24c) and rotating member (24b) from shaft (see Figures 6 & 7). Examine all seal parts and especially contact faces. Inspect seal for signs of wear such as uneven wear pattern on stationary members, chips and scratches on either seal face. **DO NOT** interchange seal components, replace the entire shaft seal (24). If replacing seal, remove stationary (24a) by prying out with flat screwdriver.

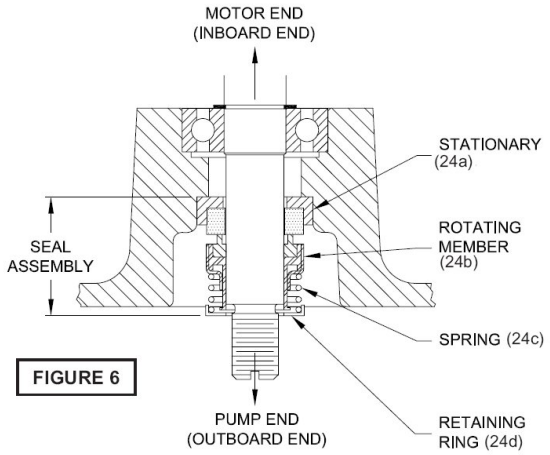

FIGURE 6

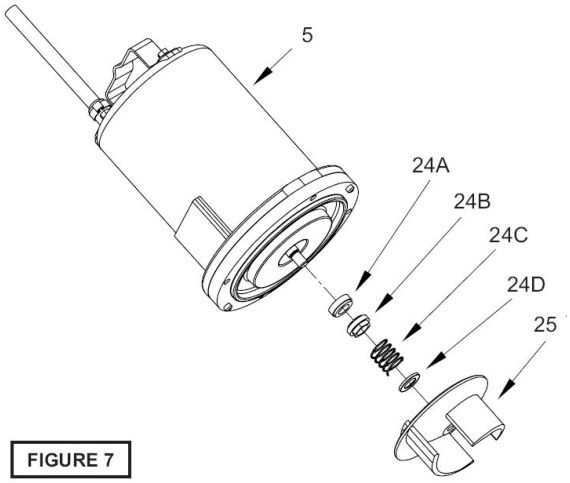

FIGURE 7

F-3.2) Reassembly:

IMPORTANT ! - DO NOT hammer on the seal pusher- it will damage the seal face.

Clean and oil seal cavities in seal plate (4). Lightly oil **(DO NOT use grease)** outer surface of stationary member (24a). Press stationary member (24a) firmly into seal plate (4), using a seal pusher. Nothing but the seal pusher is to come in contact with seal face (see Figure 8). Make sure the stationary member is in straight. Slide a bullet over motor shaft.

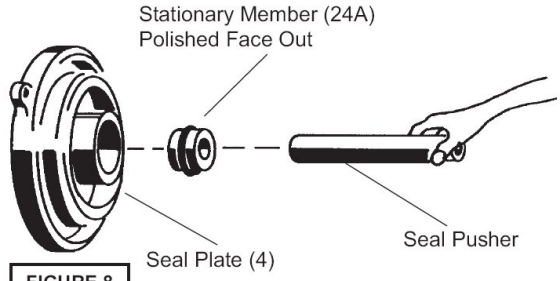

FIGURE 8

Lightly oil **(DO NOT use grease)** shaft, bullet and inner surface of bellows on rotating member (24b) see Figure 9. With lapped surface of rotating member (24b) facing inward toward stationary member, slide rotating member over bullet and onto shaft, using seal pusher, until lapped faces of (24a) and (24b) are together (see Figure 6).

It is extremely important to keep seal faces clean during assembly. Dirt particles lodged between these faces will cause the seal to leak. Place spring (24c) over shaft and in place on rotating member (24b), making sure it is seated on retainer and not cocked or resting on bellows tail. Slide retaining ring (24d) over shaft and let rest on spring (24c). Place spring (24c) and retaining ring (24d) onto rotating member (24b). Assemble impeller and volute as outlined in paragraph F-2.2. Replace oil as outlined in paragraph F-1.4.

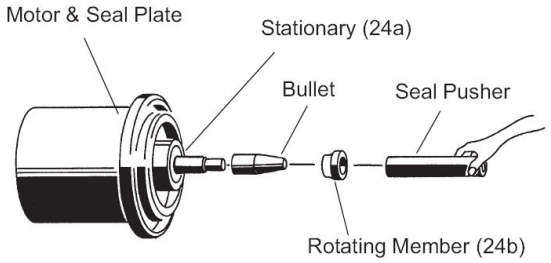

FIGURE 9

F-4) Motor and Bearing Service
F-4.1) Disassembly and Inspection:
To examine or replace the motor (6), capacitor (8, single phase units), and bearing (21), drain oil from motor as outlined in paragraph F-1.1. Disassemble volute and impeller as outlined in paragraph F-2.1 and disassemble shaft seal as outlined in paragraph F-3.1.

Position unit upright, using blocks to avoid resting unit on shaft. Unscrew cable hex bolts (10) and remove compression flange (14) and power cord (13). Remove snap ring (15) with a flat head screwdriver. Pull the terminal block (17) out of the housing (5) using a T-bolt or pair of pliers and a .25-20 screw in the threads of the terminal block (17). Be sure to leave slack on the motor leads connected underneath (see Figure 10). Use needle nose pliers to pull each female connector off of the pins on the underside of the terminal block (17) see Figure 12. The unit voltage should be noted. Remove socket head cap screws (32). Vertically lift the motor housing (5) from seal plate (4) by lifting handle (12). Inspect square ring (23) for damage or cuts. Remove the motor bolts and lift motor stator from seal plate (4). Disconnect capacitor leads from capacitor (8, single phase units). Examine bearing (21) and replace if required. If replacement is required, remove bearing (21) from motor shaft using a wheel puller or arbor press, see Figure 11.

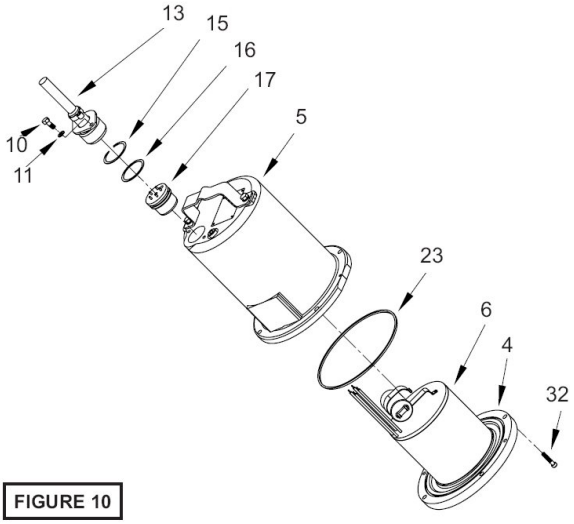

FIGURE 10

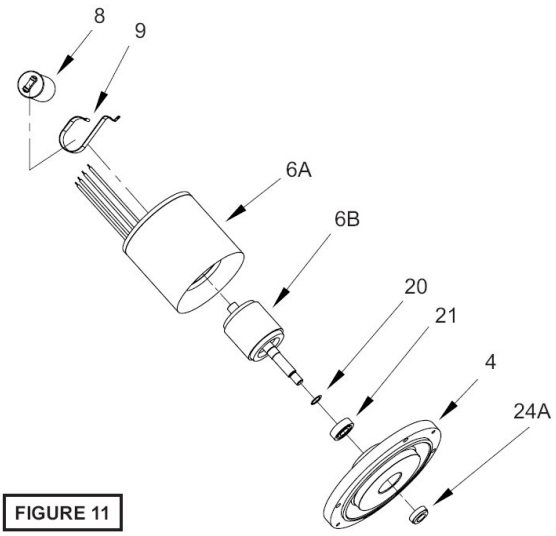

FIGURE 11

Check motor capacitor (8, single phase units) with an Ohm meter by first grounding the capacitor by placing a screwdriver across both terminals and then removing screwdriver. Connect Ohm meter (set on high scale) to terminals. If needle moves to infinity (∞) then drifts back, the capacitor is good. If needle does not move or moves to infinity (∞) and does not drift back, replace capacitor (8).

Inspect motor winding for shorts and check resistance values. Check rotor for wear. If rotor or the stator windings are defective, the complete motor must be replaced.

IMPORTANT! - all parts must be clean before reassembly.

F-4.2) Reassembly:

Bearings - When replacing bearing, be careful not to damage the rotor or shaft threads. Clean the shaft thoroughly. Press bearing (21) on the motor shaft, position squarely onto the shaft applying force to the inner race of the bearing only, until bearing seats against the retaining ring (20).

Motor - Slide lower bearing (21) and motor shaft squarely into the seal plate (4) until bearing seats on the bottom. Place stator over rotor, lining up motor bolts with holes in seal plate (4). Position capacitor (8, single phase units) so that it will lay on the opposite side of the cable entry boss of the motor housing (5). Reconnect capacitor leads. Torque motor tie bolts to 17 in-lbs. Set square ring (23) in grove on seal plate (4).

F-4.3) Wiring Connections:

Check power cable (13) for cracks or damage and replace if required (see Figure 12). Make internal wiring connections which are independent of the terminal block as shown, using connectors (36) as required. **Do not use wire nuts.** Slip motor leads and groud wire through fiberglass sleeve.

Lower motor housing (5) down onto seal plate (4) while aligning holes and stringing motor leads through the cord entry bore. (Slipping cord inside a 1 ft. length of .5" conduit makes this easier). Place socket head cap screws (32) through seal plate (4) into motor housing (5) and torque to 60 in-lbs. Reconnect motor and leads to the underside of the terminal block (17), as shown in Figures 12 & 13. Note that the pins are numbered underneath the terminal block. Place o-ring (16) into groove in terminal block and lubricate with dielectric oil. Press the terminal block (17) into the housing so it seats completely below the snap ring groove. Place snap ring (15) into groove in cord entry bore of housing.

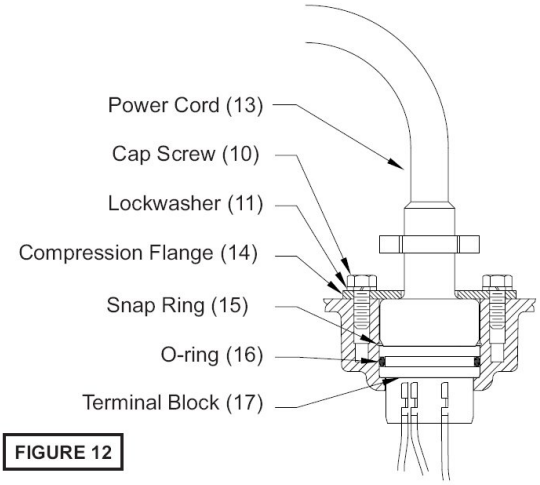

FIGURE 12

F-4.4) Cord Assemblies:

Power Cord - Refill the cooling oil as outlined in paragraph F-1.3. Make wire connections as outlined in paragraph F-4.3. Insert female end of cord plug into housing bore aligning timing mark with hole in terminal block (17) see Figure 14. Compress cord plug with compression flange (14) by tightening hex bolts (10) into the housing (5). Torque to 132 in-lbs.

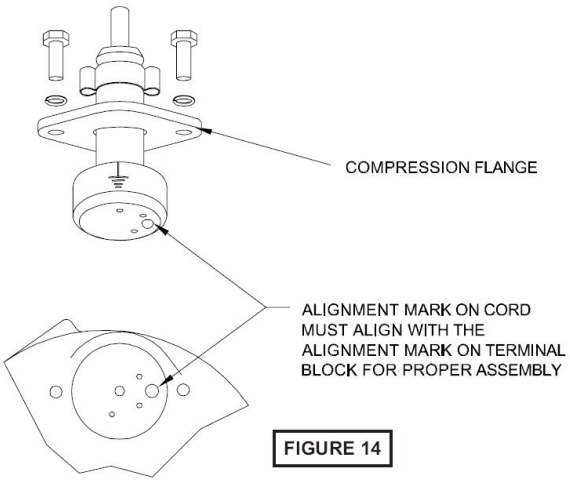

FIGURE 14

SECTION: G REPLACEMENT PARTS

G-1) Ordering Replacement Parts:
When ordering replacement parts, ALWAYS furnish the
1. Pump serial number and date code,
2. Pump model number,
3. Pump Component number.

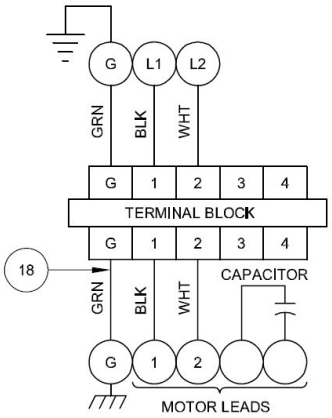

STANDARD TEMPERATURE
SINGLE PHASE - 120/240 VOLT AC (PSC)

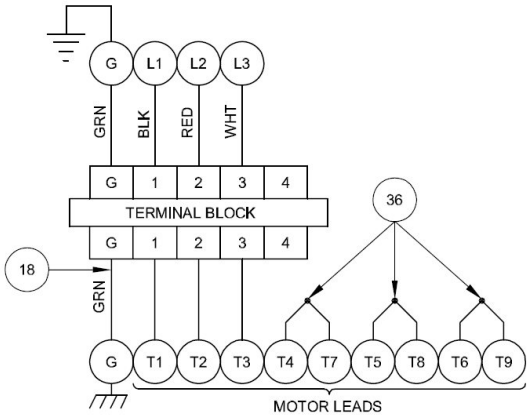

THREE PHASE - 480 VOLT AC

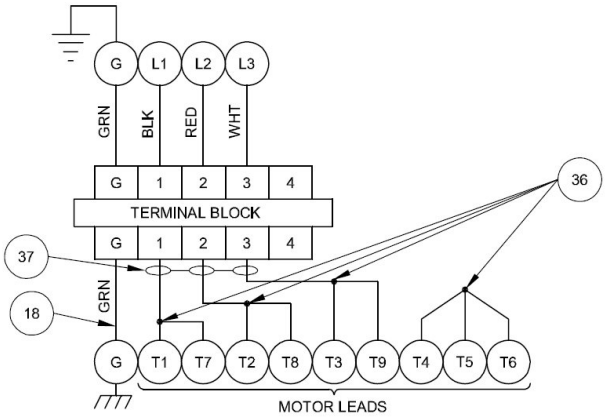

THREE PHASE - 200/240 VOLT AC

FIGURE 13

TROUBLE SHOOTING

CAUTION ! Always disconnect the pump from the electrical power source before handling.
If the system fails to operate properly, carefully read instructions and perform maintenance recommendations.
If operating problems persist, the following chart may be of assistance in identifying and correcting them:
MATCH "CAUSE" NUMBER WITH CORRELATING "CORRECTION" NUMBER.

NOTE: Not all problems and corrections will apply to each pump model.

PROBLEM	CAUSE	CORRECTION
Pump will not run	**1.** Poor electrical connection, blown fuse, tripped breaker or other interruption of power, improper power supply. **2.** Motor or switch inoperative (to isolate cause, go to manual operation of pump). **2a.** Float movement restricted. 2b. Switch will not activate pump or is defective. **3.** Insufficient liquid level.	1. Check all electrical connections for security. Have electrician measure current in motor leads, if current is within ±20% of locked rotor Amps, impeller is probably locked. If current is 0, overload may be tripped. Remove power, allow pump to cool, then recheck current. 2a. Reposition pump or clean basin as required to provide adequate clearance for float. 2b. Disconnect level control. Set ohmmeter for a low range, such as 100 ohms full scale and connect to level control leads. Actuate level control manually and check to see that ohmmeter shows zero ohms for closed switch and full scale for open switch. (Float Switch). 3. Make sure liquid level is at least equal to suggested turn-on point. 4. Recheck all sizing calculations to determine proper pump size. 5. Check discharge line for restrictions, including ice if line passes through or into cold areas. 6. Remove and examine check valve for proper installation and freedom of operation. 7. Open valve. 8. Check cutter for freedom of operation, security and condition. Clean cutter and inlet of any obstruction. 9. Loosen union slightly to allow trapped air to escape.Verify that turn-off level of switch is set so that the suction is always flooded. Clean vent hole. 10. Remove & examine for damage. Replace pump stator if required. 11. Repair fixtures as required to eliminate leakage. 12. Check pump temperature limits & fluid temperature. 13. Replace portion of discharge pipe with flexible connector. 14. Turn to automatic position. 15. Check for leaks around basin inlet and outlets.
Pump will not turn off	2a. Float movement restricted. 2b. Switch will not activate pump or is defective. 4. Excessive inflow or pump not properly sized for application. 9. Pump may be airlocked. 14. H-O-A switch on panel is in "HAND" position	
Pump hums but does not run	1. Incorrect voltage 8. Cutter jammed or loose on shaft, worn or damaged, inlet plugged.	
Pump delivers insufficient capacity	1. Incorrect voltage. 4. Excessive inflow or pump not properly sized for application. 5. Discharge restricted. 6. Check valve stuck closed or installed backwards. 7. Shut-off valve closed. 8. Cutter jammed or loose on shaft, worn or damaged, inlet plugged. 9. Pump may be airlocked. 10. Pump stator damaged/torn.	
Pump cycles too frequently or runs periodically when fixtures are not in use	6. Check valve stuck closed or installed backwards. 11. Fixtures are leaking. 15. Ground water entering basin.	
Pump shuts off and turns on independent of switch, (trips thermal overload protector). **CAUTION!** Pump may start unexpectedly. Disconnect power supply.	1. Incorrect voltage. 4. Excessive inflow or pump not properly sized for application. 8. Cutter jammed, loose on shaft, worn or damaged, inlet plugged. 12. Excessive water temperature.	
Pump operates noisily or vibrates excessively	4. Operating at too high a pressure. 5. Discharge restricted. 8. Cutter broken. 13. Piping attachments to buiding structure too rigid or too loose.	

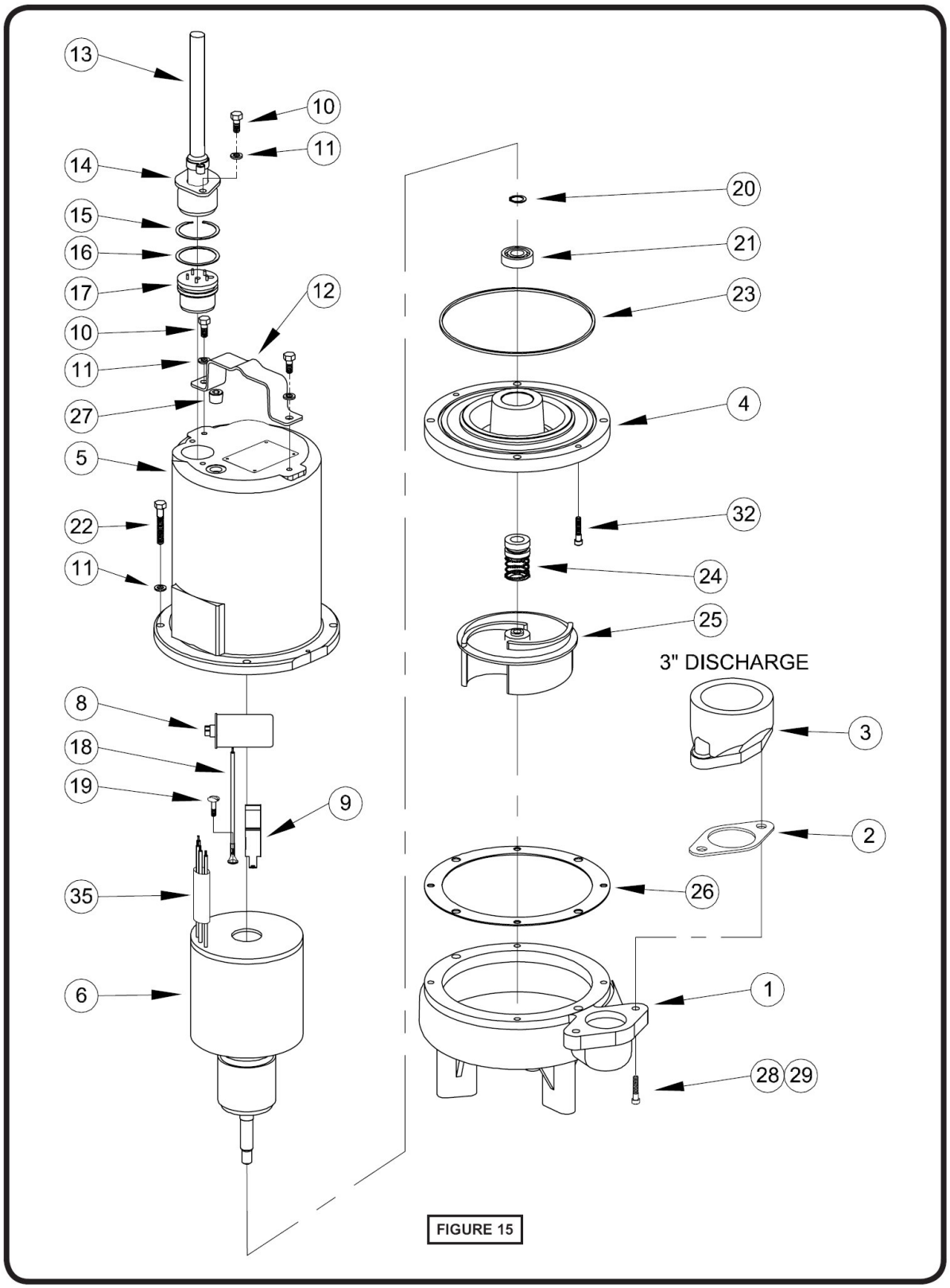
13
10
11
14
15
16
17
12
10
11
27
5
22
11
8
18
19
9
35
6
20
21
23
4
32
24
25
3" DISCHARGE
3
2
26
1
28
29

FIGURE 15

PARTS KITS

Seal Repair Kit.....P/N: 107272 (Item #'s 2, 23, 24, 26)

Overhaul Kit.....P/N: 111521 (Item #'s 2, 15, 16, 20, 21, 24, 26, 27, 35, 37)

PARTS LIST

ITEM	QTY.	PART NO.	DESCRIPTION
1	1	055400	Volute (Std)
2	1	069140	Gasket
3	1	074498	Flange 3" Discharge
4	1	084532	Seal Plate
5	1	105196	Motor Housing
6	1	**Motor:**	**Capacitor (item 8):**
		030369BS	034964 PIP500B
		030370BS	070963 PIP501B
		071352BS	None PIP520B, PIP521B
		029792BS	070963 PIP502B, PIP503B
		071354BS	None PIP522B,PIP523B, PIP524B, PIP525B
7	96 oz	029034	Oil
8	1	034964	Capacitor (30MFD) 1 Phase
	1	070963	Capacitor (20MFD) 1 Phase
9	1	039858	Capacitor Bracket 1 Phase
10	4	1-156-1	Hex. Hd. Cap Screw, 5/16-18 x 1.00" Lg., Stainless
11	8	026322	Lockwasher, 5/16, Stainless
12	1	103503	Handle
13	1	103756	Power Cable Set 120 Volt, 1 Phase
		110949	240 Volt, 1 Phase .5Hp
		103741	240 Volt, 1 Phase .75 & 1Hp
		103742	3 Phase
14	1	103582	Compression Flange (Included with Cable Set)
15	1	105197	Snap Ring
16	1	2-31051-224	O-ring
17	1	103584	Terminal Block, 1 Phase
		103583	Terminal Block, 3 Phase
18	1	105111	Ground Wire Assembly
19	1	016660	Screw, Self Tapping #8-32 x .375" Lg.
20	1	085326	Retaining Ring
21	1	017414	Bearing
22	4	1-135-1	Cap Screw, 5/16-18 x 1.75" Lg., Stainless
23	1	027269	Square Ring
24	1	005080	Shaft Seal - Carbon/Ceramic/Buna-N (STD)
25	1	084346	Impeller, Cast Iron, 6.00 Dia. (STD for 1 HP)
		084346TC	5.63 Dia. (STD for .75 HP)
		084346TF	5.25 Dia. (STD for .5 HP)
26	1	027344	Gasket
27	1	014270	Pipe Plug .375" NPT
28	2	1-131-1	Hex. Hd. Cap Screw, 5/16-18 x 1.25" Lg., Stainless
29	A/R	-----	Loctite 242
30	A/R	-----	Permatex 2C
32	2	084948	Socket Head Cap Screw 1/4-20 x 1.25" Lg., Stainless
34	A/R	-----	Loctite 609
35	1	625-02117	Sleeve, Fiberglass
36	4	105150	Terminal Connector 200-240V, 3Ph
	3	625-00163	Terminal Connector 480V, 3PH
37	3	105149	Wire Assembly 200-240V, 3Ph

Notes

Notes

D4d.1c
4/06
Supersedes 7/05

PACO® PUMPS

Check our worldwide offices at
www.paco-pumps.com

SP00D4d1c. Copyright © Grundfos CBS, Inc.

EXHIBIT

B

D8d.1b
4/06
Supersedes 7/05

PACO® PUMPS

INSTALLATION, OPERATION AND MAINTENANCE INSTRUCTIONS

PACO INSTANT PUMPS

Submersible Sump Pumps

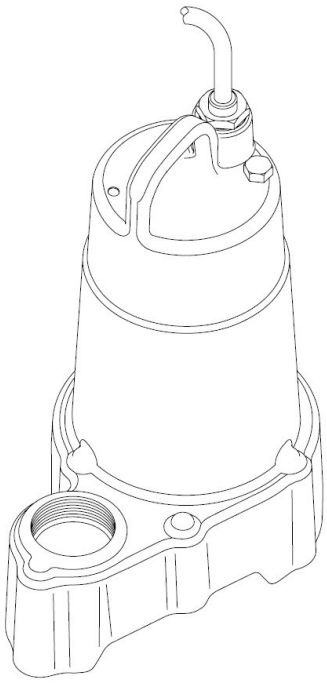

Series: **PIP700C**
PIP701C

IMPORTANT! *Read all instructions in this manual before operating pump. As a result of constant product improvement program, product changes may occur. As such Grundfos CBS, Inc. reserves the right to change product without prior written notification.*

Form No. 113654-Rev. C

SAFETY FIRST!

Please Read This Before Installing Or Operating Pump. This information is provided for **SAFETY** and to **PREVENT EQUIPMENT PROBLEMS.** To help recognize this information, observe the following symbols:

IMPORTANT! Warns about hazards that can result in personal injury orIndicates factors concerned with assembly, installation, operation, or maintenance which could result in damage to the machine or equipment if ignored.

CAUTION! Warns about hazards that **can or will cause minor** personal injury or property damage if ignored. Used with symbols below.

WARNING! Warns about hazards that can or will cause serious personal injury, death, or major property damage if ignored. Used with symbols below.

Hazardous fluids can cause fire or explosions, burnes or death could result.

Extremely hot - Severe burnes can occur on contact.

Biohazard can cause serious personal injury.

Hazardous fluids can Hazardous pressure, eruptions or explosions could cause personal injury or property damage.

Rotating machinery Amputation or severe laceration can result.

Hazardous voltage can shock, burn or cause death.

Only qualified personnel should install, operate and repair pump. Any wiring of pumps should be performed by a qualified electrician.

WARNING ! To reduce risk of electrical shock, pumps and control panels must be properly grounded in accordance with the National Electric Code (NEC) or the Canadian Electrical Code (CEC) and all applicable state, province, local codes and ordinances. Improper grounding voids warranty.

WARNING! To reduce risk of electrical shock, always disconnect the pump from the power source before handling or servicing. Lock out power and tag.

WARNING! Operation against a closed discharge valve will cause premature bearing and seal failure on any pump, and on end suction and self priming pump the heat build may cause the generation of steam with resulting dangerous pressures. It is recommended that a high case temperature switch or pressure relief valve be installed on the pump body.

CAUTION ! Never operate a pump with a plug-in type power cord without a ground fault circuit interrupter.

CAUTION ! Pumps build up heat and pressure during operation-allow time for pumps to cool before handling or servicing.

WARNING ! Do not pump hazardous materials (flammable, caustic, etc.) unless the pump is specifically designed and designated to handle them.

CAUTION ! Do not block or restrict discharge hose, as discharge hose may whip under pressure.

WARNING ! Do not wear loose clothing that may become entangled in moving parts.

WARNING ! Keep clear of suction and discharge openings. **DO NOT** insert fingers in pump with power connected.

Always wear eye protection when working on pumps.

Make sure lifting handles are securely fastened each time before lifting. **DO NOT** operate pump without safety devices in place. Always replace safety devices that have been removed during service or repair. Secure the pump in its operating position so it can not tip over, fall or slide.

DO NOT exceed manufacturers recommendation for maximum performance, as this could cause the motor to overheat.

DO NOT remove cord and strain relief. **DO NOT** connect conduit to pump.

WARNING ! Cable should be protected at all times to avoid punctures, cut, bruises and abrasions. Inspect frequently. Never handle connected power cords with wet hands.

WARNING ! To reduce risk of electrical shock, all wiring and junction connections should be made per the NEC or CEC and applicable state or province and local codes. Requirements may vary depending on usage and location.

WARNING! Submersible Pumps are not approved for use in swimming pools, recreational water installations decorative fountains or any installation where human contact with the pumped fluid is common.

WARNING! Products returned must be cleaned, sanitized, or decontaminated as necessary prior to shipment, to insure that employees will not be exposed to health hazards in handling said material. All Applicable Laws And Regulations Shall Apply.

Bronze/brass and bronze/brass fitted pumps may contain lead levels higher than considered safe for potable water systems. Lead is known to cause cancer and birth defects or other reproductive harm. Various government agencies have determined that leaded copper alloys should not be used in potable water applications. For non-leaded copper alloy materials of construction, please contact factory.

PACO® Pumps is not responsible for losses, injury, or death resulting from a failure to observe these safety precautions, misuse or abuse of pumps or equipment.

Other brand and product names are trademarks or registered trademarks of their respective holders.
6/02, 7/05, 4/06
Alteration Rights Reserved

PUMP SPECIFICATIONS:

DISCHARGE ..... 1½" NPT, Female, Vertical
LIQUID TEMPERATURE .... 104°F (40°C) Continuous
MOTOR HOUSING ..... Cast Iron
BODY & STRAINER ..... Thermoplastic
IMPELLER:
Design ..... 10 vane, vortex, with pump out vanes on back side. Balanced, ISO G6.3
Material ..... Cast Iron
SHAFT..... Stainless Steel
O-RINGS ..... Buna-N
HARDWARE ..... 300 Series Stainless Steel
PAINT ..... Air dry enamel
SEAL *Design*..... Single Mechanical, Type 21
Material ..... Silicon-Carbide/Silicon-CarbideBuna-N Hardware - 300 series stainless steel
CORD ENTRY..... 20 Ft. (6m) Cord with Plug and pressure gromment for sealing and strain relief.
UPPER BEARING:
Design..... Single Row, Ball, Oil Lubricated
Load..... Radial
LOWER BEARING:
Design..... Single Row, Ball, Oil Lubricated
Load..... Radial & Thrust

MOTOR: *Design*..... Oil Filled
Insulation ..... Class B

SINGLE PHASE..... Permanent Split Capacitor (PSC)
ELECTRICAL..... 120 Volt, 1 Phase, 60Hz.
PIP700C 1/3HP, 5.8FLA
PIP701C 1/2HP, 6.8FLA

WINDING RESISTANCE:
Main ..... 4.3 Ω
Start 12.7Ω

LEVEL CONTROL ..... Wide Angle, Mechanical, 20 Ft. (6m) Cord

MINIMUM SUMP DIA..... 18" (457mm)

inches (mm)

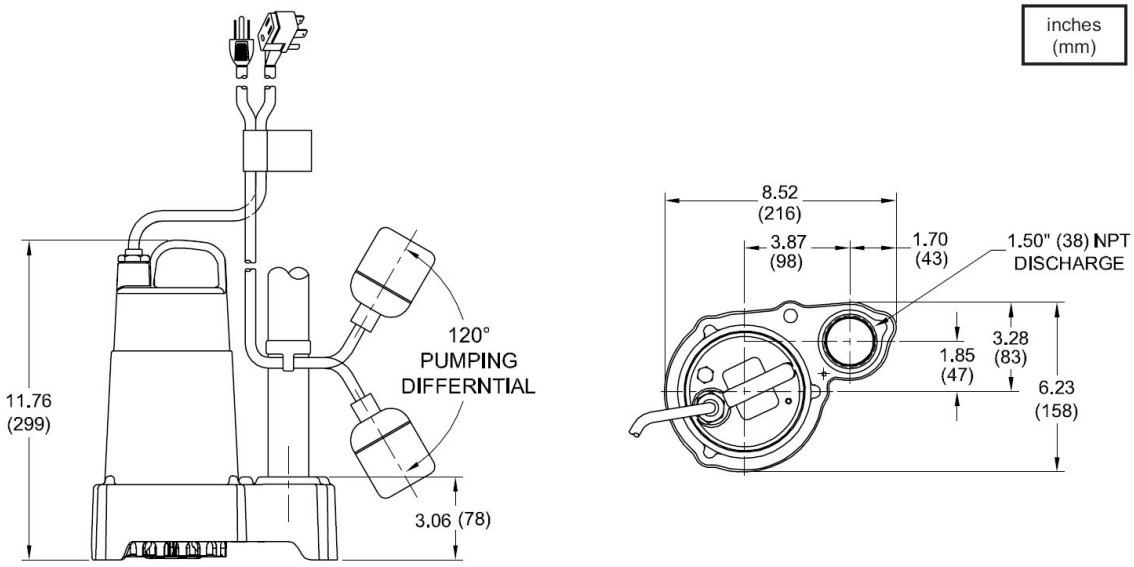

FIGURE 1

PUMP MODEL NO. _____

PUMP SERIAL NO. _____

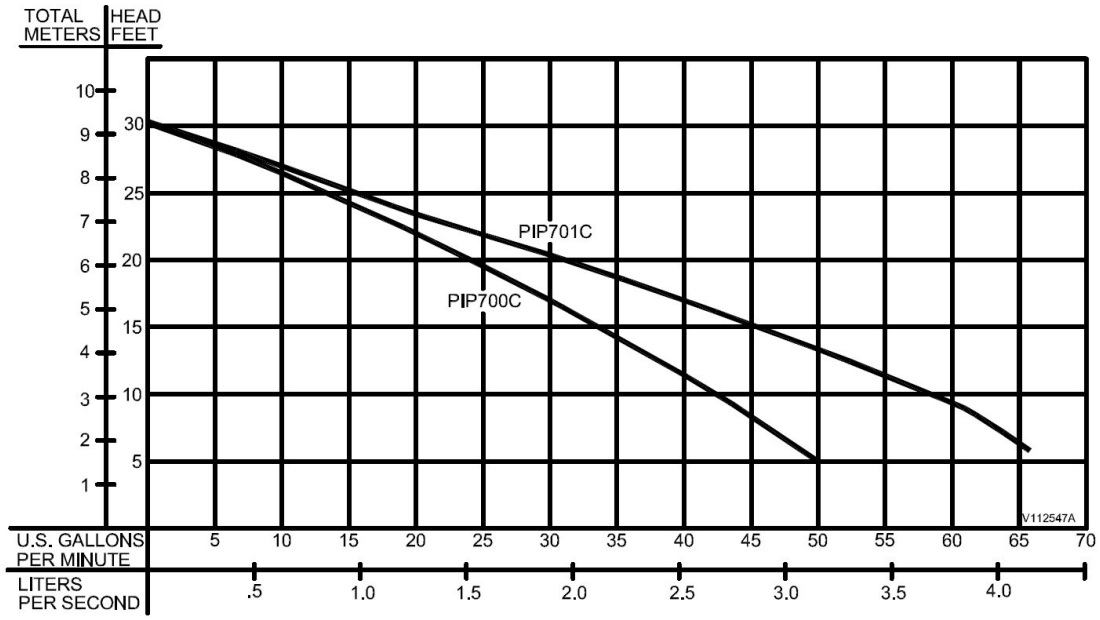

Testing is performed with water, specific gravity of 1.0 @ 68° F, other fluids may vary performance

SECTION B: GENERAL INFORMATION

B-1) To The Purchaser:
Your new Submersible Pump is constructed of the best available materials and is designed to give you many years of service with a minimum of attention.

This manual will provide helpful information concerning installation, maintenance, and proper service guidelines. Check local codes and requirements before installation. Servicing should be performed by knowledgeable pump service contractors or authorized service stations.

The pump is packaged ready for installation and no connections or adjustments are necessary except for attaching discharge piping and plugging in service cord.

B-2) Receiving:
Upon receiving the pump, it should be inspected for damage or shortages. If damage has occurred, file a claim immediately with the company that delivered the pump. If the manual is removed from the crating, do not lose or misplace.

SECTION C: INSTALLATION

C-1) Location:
These pumping units are self-contained and are recommended for use in a sump or basin. This pump is designed to pump rain water or light effluent, nonexplosive and noncorrosive liquids and shall **NOT** be installed in locations classified as hazardous in accordance with the National Electrical Code (NEC), ANSI/NFPA 70 or the Canadian Electrical Code (CEC).

The sump or basin shall be vented in accordance with local plumbing codes. Provide proper sump diameter of approx. 18" (457mm) minimum and depth of approx. 20" (508mm)minimum to allow the pump and switch to operate without restriction. The float switch should not come in contact with side or bottom of sump. Make sure sump is free of string, cloth, nails, gravel, etc. before installing pump. Never install the pump in a trench, ditch, or hole with a dirt bottom where the suction will become plugged.

C-1.1) Submergence:
The minimum sump liquid level should never be less than 4 inches (102mm) above the pump bottom.

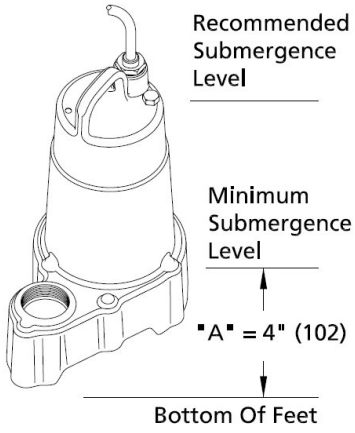

FIGURE 1

C-2) Discharge:
Discharge piping should be as short as possible. The installation of a check valve in the discharge piping is recommended for each pump being used. The check valve is used to prevent backflow into the sump. Excessive backflow can cause flooding and/or damage to the pump.

C-3) Liquid Level Controls:
Figure 2 shows a typical installation for a submersible pump using a piggy-back wide angle level control mounted to the pump.

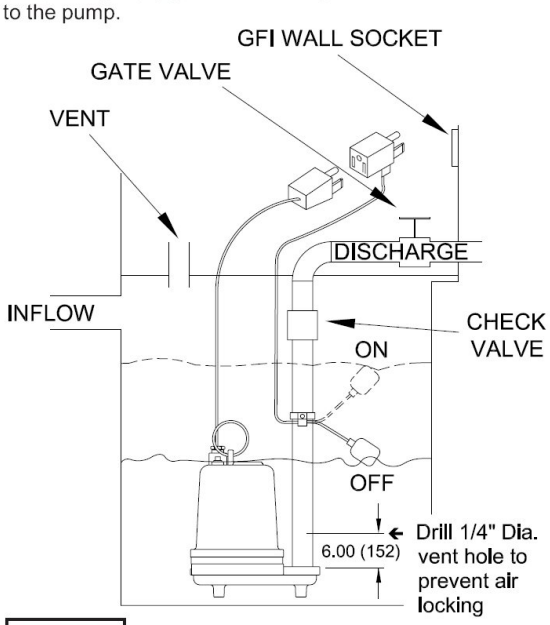

FIGURE 2

General Comments:
1) Never work in the sump with the power on.

2) Level controls are factory set. Be certain that the level control cannot hang up or foul in it's swing. Also, make certain the pump impeller is still submerged when the level control is in the 'off' mode.

3) Plug the pump plug into a GFI receptacle. One cycle of operation should be observed, so that any potential problems can be corrected.

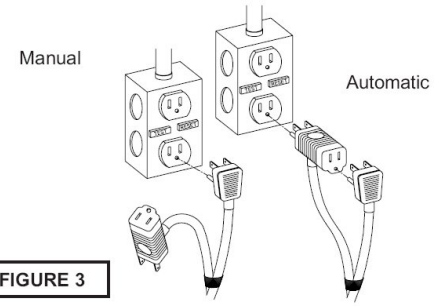

FIGURE 3

Figure 3 shows a typical connection for pumps with the piggy-back plug, for manual and automatic operations.

Automatic - Plug float cord into GFI outlet, then plug pump cord into float cord.

Manual - Plug pump cord directly into GFI outlet.

C-4) Electrical Connections:

C-4.1) Power Cable:
The cord assembly mounted to the pump must not be modified in any way. This pump comes complete with a 3 wire cord and 3 prong grounded plug that must be connected into a 3 wire grounded Ground Fault receptacle. **DO NOT** remove ground pin from electrical plug. It is **NOT** recommended to use an extension cord with these pumps. **DO NOT USE THE POWER CABLE TO LIFT PUMP.**

C-4.2) Overload Protection:
Automatic thermal overload protects the sealed-in-oil motor. Running dry may overheat the motor and trip the overload. The type of in-winding overload protector used is referred to as an inherent overheating protector and operates on the combined effect of temperature and current. This means that the overload protector will trip out and shut the pump off if the windings become too hot, or the load current passing through them becomes too high.It will then automatically reset and start the pump up after the motor cools to a safe temperature. In the event of an overload, the source of this condition should be determined and rectified immediately. **DO NOT LET THE PUMP CYCLE OR RUN IF AN OVERLOAD CONDITION OCCURS !**

SECTION D: SERVICE AND REPAIR

WARNING ! - DO NOT overfill oil. Overfilling of motor housing with oil can create excessive and dangerous hydraulic pressure which can destroy the pump and create a hazard. Overfilling oil voids warranty.

D-1) Bottom Plate:
Remove screws (2), and remove bottom plate (1) from volute and remove volute. Clean and examine impeller. If impeller vanes are clogged, or it is excessively worn or broken, the pump should be replaced.

TABLE 1 - COOLING OIL - Dielectric	
SUPPLIER	**GRADE**
BP	Enerpar SE100
Conoco	Pale Paraffin 22
Mobile	D.T.E. Oil Light
G & G Oil	Circulating 22
Imperial Oil	Voltesso-35
Shell Canada	Transformer-10
Texaco	Diala-Oil-AX
Woco	Premium 100

SECTION: E WARRANTY REPAIR

E-1) Information Needed:
ALWAYS furnish the following information:

1. Pump serial number and date code.
2. Pump model number

SERVICE PARTS AVAILABLE:
1. Bottom Plate - Not Available
2. Screws - Not Available
3. 099260XA Cord Set 20Ft. (3a & 3b supplied with cord)
4. 106923XA Mech. Wide Angle 20 Ft. Piggy Back

Pumps Sold as Complete Units Only, Except for Above Listed Level Control.

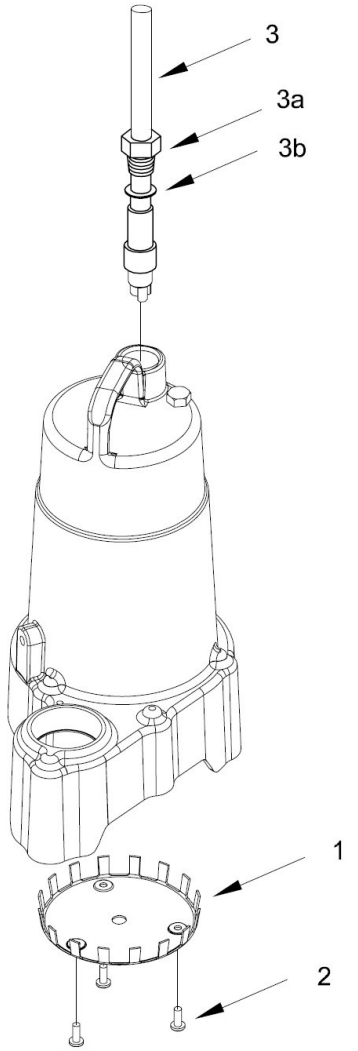

TROUBLE SHOOTING

CAUTION ! Always disconnect the pump from the electrical power source before handling.
If the system fails to operate properly, carefully read instructions and perform maintenance recommendations.
If operating problems persist, the following chart may be of assistance in identifying and correcting them:
MATCH "CAUSE" NUMBER WITH CORRELATING "CORRECTION" NUMBER.

NOTE: Not all problems and corrections will apply to each pump model.

PROBLEM	CAUSE	CORRECTION
Pump will not run	**1.** Poor electrical connection, blown fuse, tripped breaker or other interruption of power, improper power supply. **2.** Motor or switch inoperative (to isolate cause, go to manual operation of pump). **2a.** Float movement restricted. 2b. Switch will not activate pump or is defective. **3.** Insufficient liquid level.	1. Check all electrical connections for security. Have electrician measure current in motor leads, if current is within ±20% of locked rotor Amps, impeller is probably locked. If current is 0, overload may be tripped. Remove power, allow pump to cool, then recheck current. 2a. Reposition pump or clean basin as required to provide adequate clearance for float. 2b. Disconnect level control. Set ohmmeter for a low range, such as 100 ohms full scale and connect to level control leads. Actuate level control manually and check to see that ohmmeter shows zero ohms for closed switch and full scale for open switch. (Float Switch). 3. Make sure liquid level is at least equal to suggested turn-on point. 4. Recheck all sizing calculations to determine proper pump size. 5. Check discharge line for restrictions, including ice if line passes through or into cold areas. 6. Remove and examine check valve for proper installation and freedom of operation. 7. Open valve. 8. Check cutter for freedom of operation, security and condition. Clean cutter and inlet of any obstruction. 9. Loosen union slightly to allow trapped air to escape.Verify that turn-off level of switch is set so that the suction is always flooded. Clean vent hole. 10. Remove & examine for damage. Replace pump stator if required. 11. Repair fixtures as required to eliminate leakage. 12. Check pump temperature limits & fluid temperature. 13. Replace portion of discharge pipe with flexible connector. 14. Turn to automatic position. 15. Check for leaks around basin inlet and outlets.
Pump will not turn off	2a. Float movement restricted. 2b. Switch will not activate pump or is defective. 4. Excessive inflow or pump not properly sized for application. 9. Pump may be airlocked. 14. H-O-A switch on panel is in "HAND" position	
Pump hums but does not run	1. Incorrect voltage 8. Cutter jammed or loose on shaft, worn or damaged, inlet plugged.	
Pump delivers insufficient capacity	1. Incorrect voltage. 4. Excessive inflow or pump not properly sized for application. 5. Discharge restricted. 6. Check valve stuck closed or installed backwards. 7. Shut-off valve closed. 8. Cutter jammed or loose on shaft, worn or damaged, inlet plugged. 9. Pump may be airlocked. 10. Pump stator damaged/torn.	
Pump cycles too frequently or runs periodically when fixtures are not in use	6. Check valve stuck closed or installed backwards. 11. Fixtures are leaking. 15. Ground water entering basin.	
Pump shuts off and turns on independent of switch, (trips thermal overload protector). **CAUTION!** Pump may start unexpectedly. Disconnect power supply.	1. Incorrect voltage. 4. Excessive inflow or pump not properly sized for application. 8. Cutter jammed, loose on shaft, worn or damaged, inlet plugged. 12. Excessive water temperature.	
Pump operates noisily or vibrates excessively	4. Operating at too high a pressure. 5. Discharge restricted. 8. Cutter broken. 13. Piping attachments to buiding structure too rigid or too loose.	

D8d.1b
4/06
Supersedes 7/05

PACO® PUMPS

Check our worldwide offices at
www.paco-pumps.com

D8d1b. Copyright © Grundfos CBS, Inc.

EXHIBIT

C

D4d.3 & D8d.3
8/06
Supercedes All

PACO PUMPS

INSTALLATION, OPERATION
AND MAINTENANCE INSTRUCTIONS
TYPE NSC & TYPE SM

PACO SUBMERSIBLE NON-CLOG PUMPS, TYPE (NSC) D4d.3
AND
PACO SUBMERSIBLE SUMP PUMPS, TYPE (SM) D8d.3

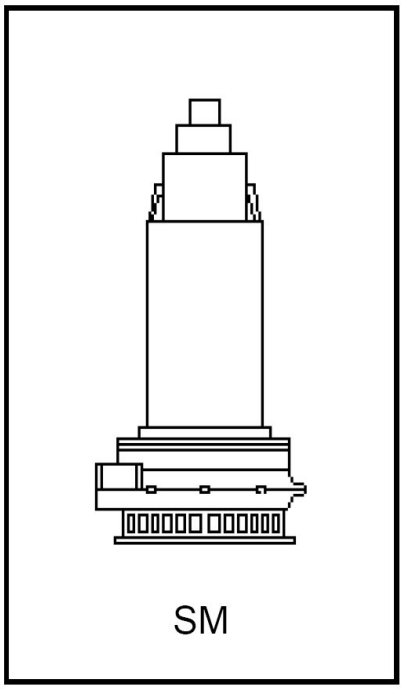

SM

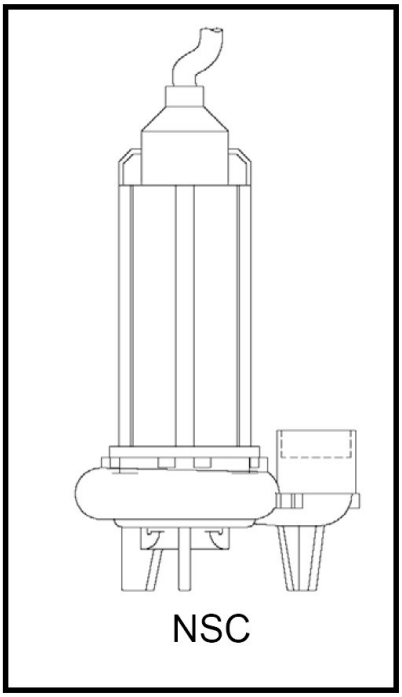

NSC

INSTALLATION, OPERATION
AND MAINTENANCE INSTRUCTIONS
TYPE NSC & TYPE SM

TABLE OF CONTENTS

I. INSTALLATION..... 3
II. OPERATION..... 3
III. DISSASEMBLY OF PUMPS..... 4
IV. TROUBLE SHOOTING..... 4
V. ORDERING PARTS..... 4

PACO® PUMPS

INSTALLATION, OPERATION AND MAINTENANCE INSTRUCTIONS TYPE NSC & TYPE SM

1. INSTALLATION

Read these instructions thoroughly before installing and operating your PACO Type SM/NCS Submersible Pump. Successful operation depends on careful attention to the procedures described in this manual. Keep this instruction manual handy for future use.

a. Pump Identification: All PACO Pumps are identified by Catalog and Serial Numbers. These numbers are stamped on the pump nameplate (Fig. 1) affixed to each pump volute casing, and should be referred to in all correspondence with the Company.

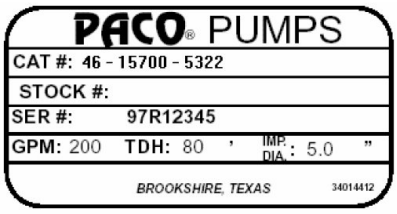

FIG. 1 PUMP NAMEPLATE

b. Pump is designed to sit on a concrete or metal pump bottom. It should not sit on a dirt bottom.

c. Pipe discharge to sewer, using a check valve to prevent back-flow. On a duplex installation, use a check valve in each pump discharge line. Locate check valve(s) as far away from pump bottom as possible, to avoid possibility of air binding. Be certain that weight of discharge piping is supported so it does not put a strain on pump casting. End of pipe entering pump discharge flange is to be unthreaded, as special pump flange makes an O-ring seal around it.

d. Fasten pump chain to sump cover, to provide means of lifting pump when needed. If it becomes necessary to replace chain, do not use a smaller size than chain supplied with pump.

e. Install and adjust liquid level control in accordance with the liquid level control instruction sheet.

f. Read motor instruction manual and make electrical connections. A third leg overload protection in the starter is recommended as is moisture-sensing controls.

g. Before starting pump, clean sump of debris, which might clog the pump, such as rags, paper, canvas gloves, blocks of wood.

h. If motor is three phase, check its direction of rotation by either of the following methods:

(1) With pump hanging free of the bottom, and with discharge not connected (but with a piece of burlap wired over it to prevent water discharging too far) turn motor on and then off immediately. As the correct rotation of pump is right hand (clockwise), the “kickback” should be left hand (CCW), looking down on the motor from above it. If it kicks back in wrong direction, interchange any two leads at bottom of entrance switch (after turning off switch first) and try again.

(2) Alternate method: Fill sump. Turn pump on and operate it. Note the amount of water pumped out of sump and the time it took. Interchange any two leads at bottom of entrance switch (after turning switch off, first, and marking the leads): fill sump again and try pump again for the same time. The connection which pumps water out at the faster rate is the correct connection, as pump will pump at a much faster rate when running correct rotation than when running backward.

PACO® PUMPS

**INSTALLATION, OPERATION
AND MAINTENANCE INSTRUCTIONS
TYPE NSC & TYPE SM**

2. OPERATION

a. This motor does not require lubrication attention. Never disassemble the motor. Disassembly of motor outside of an authorized service shop of the motor manufacturer voids the motor warranty.

b. Water level must be above the motor at all times while operating to provide necessary cooling. While it is permissible to operate pump for a few minutes, manually, to pump the water down as low as possible to clean out the sump or to remove pump, the motor must not operate without water surrounding it completely for more than 15 minutes. Set the level control carefully so that pump shuts off before water starts to uncover top of motor in normal operation.

c. Check voltage while pump is operating. Voltage must not vary more than 10% from rated voltage stamped on motor nameplate.

d. Recheck direction of rotation of motor at any time any alterations are made in system wiring.

e. Do not lift unit by the motor cable, or conduit. Lifting lugs are provided on the unit; use them.

3. TO DISASSEMBLE THE PUMP

a. Remove pump from sump. If necessary to disconnect wiring, mark leads carefully so they will be reconnected in same manner.

b. To replace impeller, remove volute and remove impeller cap screw and washer. Use wheel or gear pullers to remove impeller or warm impeller slightly with a torch to expand it, and, with two large screwdrivers or small pry bars, one on each side between impeller and backplate, pry carefully and evenly to force impeller off of shaft. BE VERY CAREFUL TO PRY EVENLY SO AS NOT TO BEND SHAFT.

c. Reassemble in reverse order. Under no circumstances should impeller be driven on by pounding, as this would damage the seal. Use impeller cap screw to gradually pull impeller onto shaft.

4. CHECKING FOR TROUBLE

a. If pump will not deliver any water, or delivers less water than normal:
   (1) See that pump is running right hand (CW), looking downward.
   (2) Check impeller to see that it is not plugged with debris.
   (3) Check motor nameplate to see that it is correct speed for pump.
   (4) Check to see that suction screen is not clogged or buried in muck or debris so as to cut down amount of water reaching pump.
   (5) Check pump operating discharge head. Compare to pump selection head.

b. If motor overheats, blows fuses, or magnetic switch trips off, check to see that:
   (1) Voltage is same as stamped on motor nameplate – not any lower. (Power company can check the voltage for you. Be sure to check at time when voltage is usually low, such as evening.)
   (2) Motor is not faster speed than correct for pump.
   (3) Head is not lower than unit is selected for. Centrifugal pumps will overload at heads lower than they are selected for, due to pumping increased capacity at lower heads.

(4) If liquid is heavier than water, motor size must be selected to handle this heavier specific gravity.

(5) If liquid is more viscous than water, motor size must be selected to handle this greater viscosity.

(6) Shaft is not bent.

(7) Impeller is not rubbing on bottom of pump.

(8) Check heater and fuse selection.

5. ORDERING PARTS

- PACO PUMPS has over 90 years of experience in the design, manufacture, and application of centrifugal pumps and pumping systems. PACO's commitment to state-of-the art pump design and quality manufacturing assures maximum user benefits with optimum equipment life at lower cost.
- PACO's commitment to their customers continues through an extensive service organization. Highly trained technicians can assist customers with initial startup, troubleshooting, repair, and system analysis.

PACO maintains an extensive stock of replacement parts and part kits for out most popular model pumps. Shipment of these parts is normally made within three days after receipt of an order. On larger pumps, where it is impractical for our factory to inventory low usage parts, replacement parts are normally manufactured and shipped within 15 working days of receipt of an order. In order to reduce pump repair time and shorten inconvenient pump service interruptions, it is suggested that the pump user stock spare parts. For suggested spare parts see Replacement Parts Guide D8b.2, attached, and contact your local PACO Sales Representative (see back cover for the number of your nearest PACO sales office). Since spare parts requirements and quantities vary for specific pump constructions, allow your PACO Representative to help in defining your spare part requirements. To ensure that the proper replacement parts are ordered for your particular pump model, when you call:

- Identify all pertinent data from the pump nameplate (see Pump Identification). This should always include the pump Catalog or Model Number, and the pump Serial Number.
- For replacement impellers, also include from the nameplate the operating conditions (GPM and TDH) and the impeller diameter.
- Identify all parts by item number and description as indicated by the appropriate assembly drawing in this manual, for your particular pump model.

INSTALLATION, OPERATION
AND MAINTENANCE INSTRUCTIONS
TYPE NSC & TYPE SM

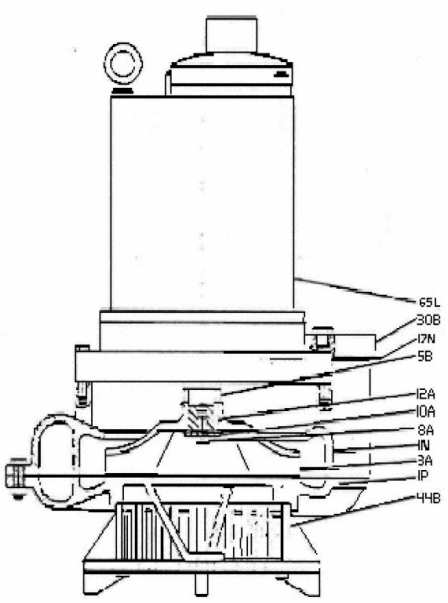

1P – VOLUTE, LOWER
1N – VOLUTE, UPPER
3A – IMPELLER
5B – SPACER
8A – SCREW, IMPELLER
10A – WASHER, IMPELLER
12A – KEY, IMPELLER
17N – GASKET, DISCHARGE
30B – FLANGE, DISCHARGE
44B – SCREEN
65L – MOTOR

FIG. 2 SUBMERSIBLE SUMP PUMP TYPE “SM”

FIG. 3 SUBMERSIBLE NON-CLOG PUMP TYPE “NSC”

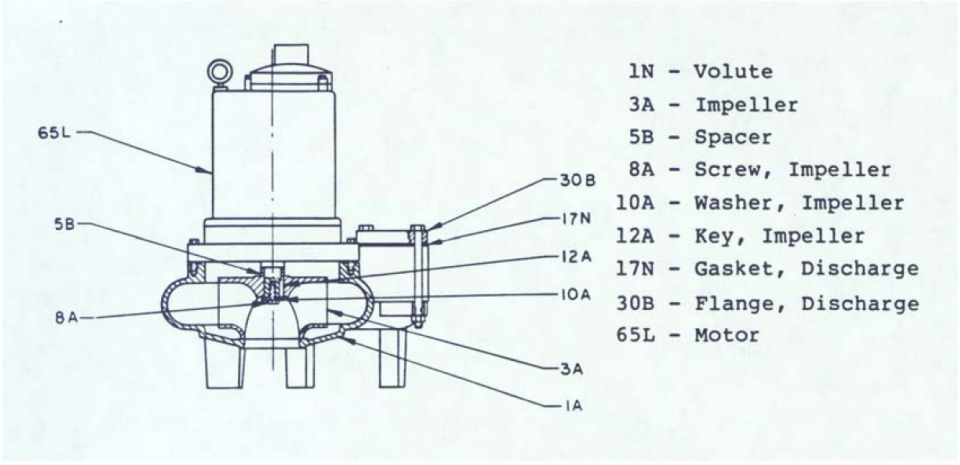

EXHIBIT

D

(760) 347-6800 | info@pippulsators.com

Pulsating Irrigation Products (PIP) is an irrigation company specializing in low flow frost protection and irrigation. PIP's innovative R&D efforts focus on the needs of modern agriculture, and offers solutions specially designed to meet those needs.

PIP is the exclusive owner of the patented Pulsator® technology developed by engineer Gideon Ruttenberg more than 20 years ago. The PIP Pulsator® has been marketed extensively worldwide and has been used by growers ever since its introduction. PIP's Pulsator® is a small device that converts a continuous low flow entering its inlet into an instantaneous high flow ejected through its outlet in short pulses. As demonstrated in the video, PIP's Pulsators® are uniquely engineered to deliver water in an efficient and cost-effective manner to our customers.

Pulsator® Applications:

- Frost protection of grapes, blueberries, apples, and other crops
- Cooling of grapes, cherries, and other crops
- Humidity control, cooling, and irrigation of greenhouses
- Cooling of poultry and livestock
- Irrigation of trees, bushes, and flowers
- Germination of plants in nurseries

PULSATING IRRIGATION PRODUCTS, INC.
43391 Business Park Drive, Suite C-7
Temecula, CA 92590
Phone: (760) 347-6800
Fax: (775) 417-3966
Email: info@pippulsators.com

SITE MAP

Home

About Us

Products

Distributors

Contact Us

Copyright © 2013 PIP Pulsators | Web Services by TAG Online, Inc.

EXHIBIT

E

THE IRRIGATION ASSOCIATION®

Login My Cart

HOME

< back

International Irrigation Show

Exhibitors: 2003

A - B - C - D - E - F - G - H - I - J - K - L - M - N - O - P/Q - R - S - T - U - V - W - X/Y

COMPANY
ABI Irrigation
Acclima Precision Irrigation
AccuRain, Inc.
Action Machining, Inc.
Adcon Telemetry
Advanstar Landscape Group
Agricultura De Las Americas
Agricultural Products, Inc.
Agrifim De Colombia/Agrimax Int'l
Agrifim Irrigation Products, Inc.
Agri-Inject, Inc.
Agrilink International, Inc.
Air-O-Lator Corporation
Associated Landscape Contractors of America
(ALCA)
Alex-Tronix, A Division of GNA Industries
Alturnamats, Inc.
Ambiance Lighting Systems by Sea Gull Lighting
American Granby, Inc.
American Hydro Systems
American Nurseryman
American Presto Corp.
American Society of Irrigation Consultants (ASIC)
Amiad Filtration Systems
Amiad Filtration Systems International
Andros Engineering
Antelco Corporation
Applied Eng. Products Inc.
Aqua Conserve
Aqua Control Fountains and Aerators
Aquamaster Fountains & Aerators
ARMOR Access Boxes
Automata, Inc.
Automatic Filters, Inc.-Tekleen
Baccara Geva
Backflow Prevention Device InnClosures
Banjo Corporation
Barnel USA
Baron Supply
Baseline LLC
BAVCO
Berkeley Pumps
Bermad Control Valves
Blackburn Manufacturing Co.

Blazing Products by Tom King
Border Concepts, Inc.
Boshart Industries, Inc.
Bowsmith, Inc.
Buckner by Storm

Cal Poly University Pomona
Campbell Scientific, Inc.
Canplas Industries Ltd.
Canycom Sales, Inc.
Carroll Childers Company
Carson Industries LLC
CAST Lighting LLC
CDS-John Blue Company
Centa Corporation
Centennial Plastics LLC
Center for Irrigation Technology (CIT)
Ceres Products Company/Lawnlife
Champion Irrigation Products
Channel Floway Services, Inc.
Chapin Watermatics, Inc.
China Council for the Promotion of International Trade
(CCPIT-SSA)
Clemons Sales Corp.
Clow Valve Company
CMR-Hydrology
Coleman Cable, Inc.
Cometal, S.L.
Conbraco Industries, Inc.
Control Tech USA, Inc.
Cornell Pump Company
Corona Clipper, Inc.
Cresline Plastic Pipe Co., Inc.
Cuyamaca College Ornamental Horticulture Dept.

Davis Instruments
Dawn Industries, Inc.
Decagon Devices Inc.
Degania Silicone, Inc.
DekoRRa Products
Delta Plastics of the South, LLC
Deutz Corporation
DFW Plastics, Inc.
Diamond Plastics Corporation
DIG Corporation
DISCO-Drip Irrigation Supply Co.
Dosmatic
Drip Irrigation Systems
Drip Research Technology Services
Dura Plastic Products, Inc.
Dynamax, Inc.

Ecological Laboratories, Inc.
EMCO Flow Systems/Advanced Energy
ergoTool LLC
Eurodrip U.S.A., Inc.
Evenproducts Limited
Everfilt
Ewing Irrigation
Exportadora De Plasticos Agricolas S.A. De C.V.
EZ-Flo Injection Systems, Inc.

FastDitch, Inc.
FertiGator
Fertile Earth Corporation
Firestone Building Products Co.
Fiskars Garden Tools
Five Star Enclosures
Flo Control, Inc.
Flowtronex
Focus Industries, Inc.
Fogco Systems, Inc.
Footage Tools
Forester Communications, Inc.
Fresno Valves & Castings, Inc.
Fry Technology
FX Luminaire

Geoflow, Inc.
Gheen Irrigation Works
Global Irrigation, Inc.
Golf Inc. Magazine
Goulds Pumps/ITT Industries
Green Media/A Division of Adams Business Media
Griswold Controls
Grotech Industries, LLC
Ground Cover Industries Inc.
Growtech, Inc.

H2O Stewardship Solutions
HADCO
Hancor, Inc.
Hanna Instruments
HARCO Fittings
Harger Lightning & Grounding
Harward Irrigation/Sprinkler World
Hastings Irrigation Pipe Co.
Headlock Inc.
Hendrickson Bros.
Heron Electric Co. Ltd.
HIT Products Corporation
Huesker, Inc.
Hunter Industries
Hydropoint Data Systems, Inc.
Hydro-Scape Products, Inc.

Imex KL&C CA USA, Inc.
Industria Fundidora El Rosario, S.A. De C.V.
Injection Technical Control, Inc. (ITC)
Inject-O-Meter Fertigiation Pumps
Intake Screens, Inc.
Intermatic, Inc.
International Water and Irrigation
IPS/Weld-On
Irridelco International Corp.
Irrigation & Green Industry
Irrigation Association
Irrigation Association Education Foundation (IAEF)
Irrigation Components Int'l
Irrigation Training & Research Center (ITRC)
Irrigazette SARL
Irriland International
Irrisoft, Inc.
Irritec S.R.L.

Irrometer Company, Inc.

Jaeco Fluid Systems
Jain Irrigation Systems, Inc.
JCM Industries, Inc.
John Deere Power Systems
Johnston Pumps/PACO Pumps

Karlington Electric, Inc.
Kasco Marine, Inc.
KBI-King Brothers Industries
Kenyon Tools
Kichler Landscape Lighting
Kifco Irrigation
King Innovation
Komet Irrigation
K-Rain Manufacturing Corp.
Kroy Industries, Inc.
Kupferle Foundry Company

L.R. Nelson Corporation
Lake Company
Lakos Separators and Filtration Systems
Lamy International
Landmaster Products
Landscape Contractor
Lasco Fittings, Inc.
Lawn & Landscape Magazine
Layer-Z, Inc.
Leatzow & Associates
Leemco, Inc.
Lindsay Manufacturing Co.
Little Giant Fittings Co., Inc.

M.K. Hansen Co.
Marshall Engines
Matco-Norca, Inc.
Maxijet, Inc./Mister Landscaper, Inc.
Mazzei Injector Corporation
McCrometer, Inc.
Metzerplas
Miller-Leaman, Inc.
MIPCO Ag Films
Monarch Industries
Morrill Industries, Inc.
Moss Products Pty. Ltd.
Motorola Water Management Solutions
Mueller Industries
Munro Companies
Murray Corporation
Myron L Company

NaanDan Irrigation Systems
Naco Industries, Inc.
National Pump Company, LLC
NDS, Inc.
Nebraska Irrigation, Inc.
Nelson Irrigation Corporation
Netafim USA
New Ag International
NIBCO Inc.
Northstar Industries

Northstar Tools, Inc.

OASE
Ocmis North America
Oetiker, Inc.
Olson Irrigation Systems
Olympia Group, Inc.
Omni Gear
Orbit Irrigation Products
Orival Water Filters
Otterbine Barebo, Inc.
Outdoor Detail, Inc.

Paige Electric
Permaloc Aluminum Edging
Perrot-Regnerbau Calw GmbH
PIP Pulsating Irrigation Systems
Plant Marvel Laboratories, Inc.
Planter Technology, Inc.
Point Source Irrigation

INTERNET ARCHIVE WayBackMachine http://www.irrigation.org/show/default.aspx?pg=exbtr_list_2003.htm&id=28 Go JUL AUG O
13 captures 4 Aug 04 - 17 Oct 07 4 2003 2004 2(

Project Clean Water,
San Diego Regional Stormwater Programs
Protek Specialty Co.
PVC Fittings, Inc.
PVF International, Inc.
PW Eagle, Inc.

Queen Gil International

Rain Bird Corporation
Rain Master Irrigation Systems
Rainbow International Supply, Inc.
Raphael Valves Industries
Regency Wire & Cable
Reinke Manufacturing Co., Inc.
Remote Control Technology
Robbco Pumps, Inc.
Roberts Irrigation Products, Inc.
Rockscapes Professional Landscape Lighting

Salco Products
Senninger Irrigation Inc.
Service Wire Company
Seymour Manufacturing Co., Inc.
Siemens Energy & Automation/Process Instrumentation
Signature Control Systems, Inc.
Singer Valve Inc.
Soileau Industries
SonTek/YSI Inc.
Southwest Trees & Turf
Spears Manufacturing Company
Specified Fittings, Inc.
Spectrum Technologies, Inc.
SPX Valves & Controls/Febco Products
Star Sight Innovations
Strong Enterprises
Superior Controls Co., Inc.

Sure-Flo Fittings

T & C Mfg & Operating, Inc.
T. Christy Enterprises, Inc.
Tamaqua Cable Products/Draka USA
Tampa Bay Convention & Visitors Bureau
Titan Industries, Inc.
T-L Irrigation Company
TMC Design Corporation
Toro Ag Irrigation
Toro Irrigation
Travis Pattern and Foundry
Triad Fastener L.P.
T-Systems International, Inc
Tucor, Inc.
Turf Magazine

Underhill International Corporation
Unique Lighting Systems, Inc.
United Elchem Ind., Division of Oatey SCS
United Green Tech
Universal Sales
Universal Motion Components
US Bureau of Reclamation
US Committee on Irrigation & Drainage (USCID)
USDA Agricultural Research Service
USDA National Agricultural Statistics Service
USDA Natural Resources Conservation Service

V.I.T. Products, Inc./Strong Box
Valley View Industries
Valmont Irrigation
Valplastic USA LLC
Valvette Systems Corporation
Verdegaal Brothers, Inc.
Vista Professional Outdoor Lighting
Visual Impact Technologies, Inc.

Wade Rain/Pepco
Wastewater Solutions, Inc.
Water2Save LLC
Waterman Industries, Inc.
Watertronics, Inc.
Watts Regulator
Weathermatic
WeatherTec Corp.
Weed Man
Wilkins, A Zurns Company
WISSCO/Xanatek

XCAD Valve & Irrigation, Inc.
Yardney Water Filtration Systems

^Up

©2004 The Irrigation Association®

Contact The Irrigation Association®

EXHIBIT

F

INTERNET ARCHIVE
WayBackMachine
http://pulsators.net/
Go
59 captures
11 Nov 01 - 18 Dec 14
JUN JUL A
28
2003 2004 2

PIP

Pulsating Irrigation Products

Since 1993, PIP Pulsators® have been used for Irrigation, Frost Protection, Cooling and other applications. Efficiently, Simply, Economically.

Pulsating Irrigation Devices

Pulsating Irrigation Systems

Frost Protection

PIP News

Contact

The PIP Pulsator®

When every d counts !

Covered by US patent

Pulsating Irrigation Pr
Tel: +1 760 34
Fax: +1 760 34

EXHIBIT
G

INTERNET ARCHIVE WayBackMachine
http://pulsators.net/ Go
59 captures
11 Nov 01 - 18 Dec 14
DEC JAN M
25
2001 2003 2

The PIP Pulsators®

Frost Protection & Irrigation

Frost Protection of Kiwi

PIP

Pulsating Irrigation Products

Pulsating Irrigation Devices

Pulsators Schematic Diagram

Pulsating Irrigation Systems

Frost Protection

Contact

P: 760-347-6800

F: 760-347-4243

info@pulsators.net

sales@pulsators.net

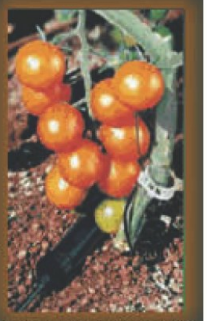
Pulsating Drip for Tomatoes

Cooling & Humidity Control

Pulsating Drip for Potted Plants

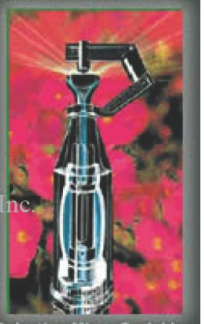
Pulsating Micro-Sprinkler

PIP Inc.

EXHIBIT
H

INTERNET ARCHIVE
WayBackMachine
http://pulsators.net/
Go
59 captures
11 Nov 01 - 18 Dec 14
MAR OCT
28
2005 2007

EXHIBIT
I

INTERNET ARCHIVE
WaybackMachine
http://pippulsators.com
Go
APR FEB APR
Close
7
2009 2011 2012
Help
20 captures
28 Oct 07 - 21 Dec 14

EXHIBIT

J
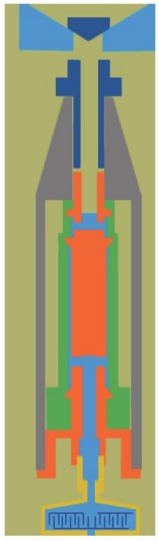
INTERNET ARCHIVE
Wayback Machine
http://pippulsators.com/
Go
OCT JAN FEB
Close
20 captures
28 Oct 07 - 21 Dec 14
4
2012 2014 2015
Help