ESTTA Tracking number: **ESTTA675314**
Filing date: **06/01/2015**

IN THE UNITED STATES PATENT AND TRADEMARK OFFICE
BEFORE THE TRADEMARK TRIAL AND APPEAL BOARD

Proceeding	85281291
Applicant	Heatcon, Inc.
Correspondence Address	JOHN M JANEWAY JANEWAY PATENT LAW PLLC 2208 NW MARKET STREET , SUITE 508 SEATTLE, WA 98107-4098 UNITED STATES marianne@janewaypatentlaw.com
Submission	Appeal Brief
Attachments	Appeal_Brief.pdf(3910103 bytes)
Filer's Name	John M. Janeway
Filer's e-mail	john@janewaypatentlaw.com, tracy@janewaypatentlaw.com
Signature	/John M. Janeway/
Date	06/01/2015

IN THE UNITED STATES PATENT AND TRADEMARK OFFICE
TRADEMARK TRIAL AND APPEAL BOARD

In re Application of:	Heatcon Inc.
Serial No.:	85/281,291
Appeal Filed:	20 March 2013
Mark:	The Three-dimensional Configuration of the Arrangement of the HCS9200B Composite Repair Set's User Interface Components

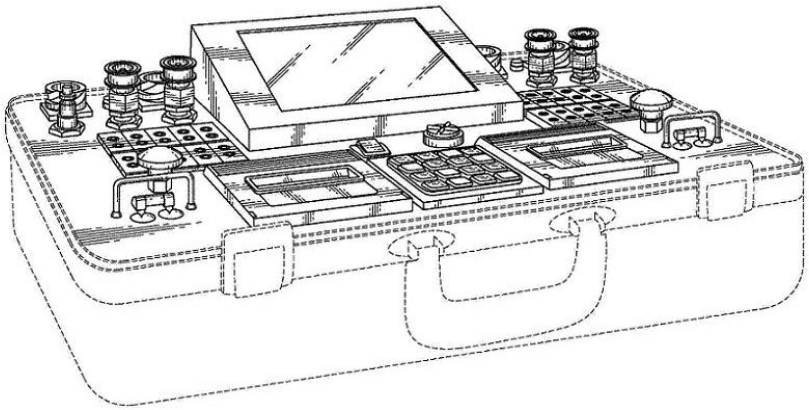

APPLICANT'S APPEAL BRIEF

John M. Janeway
JANEWAY PATENT LAW PLLC
Suite 506
2208 NW Market Street
Seattle, WA 98107
(206) 708-7705

Attorney for Applicant

INDEX OF CASES

CASES **Page(s)**

Cartier, Inc. v. Four Star Jewelry Creations, Inc., 348 F. Supp. 2d 217 (S.D.N.Y. 2004) 6

Fuddruckers, Inc. v. Doc's B.R. Others, Inc., 826 F.2d 837 (9th Cir. 1987) 6

In re Chesebrough-Pond's, Inc., 224 USPQ 967 (TTAB 1984) 6

In re Honeywell Inc., 8 USPQ2d 1600 (TTAB 1988) 6

In re Morton-Norwich Prods., Inc., 671 F.2d 1332 (C.C.P.A. 1982) ..... *passim*

In Re UDOR U.S.A., Inc., 89 USPQ2d 1978 (TTAB 2009) 9

In Re Weber-Stephen Prods. Co., 3 USPQ2d 1659 (TTAB 1987) 9

In Re Zippo Mfg. Co., 50 USPQ2d 1852 (TTAB 1999) 9, 13

KeyStone Retaining Wall Sys., Inc. v. Westrock, Inc., 997 F.2d 1444 (Fed. Cir. 1993) 6

Qualitex, Co. v. Jacobson Prods. Co., 514 U.S. 159, 165 (1995) 5

TrafFix Devices, Inc. v. Mktg. Displays, Inc., 532 U.S. 23 (2001) 5, 13

Applicant Heatcon Inc. (Heatcon) appeals from the Examining Attorney's final refusal to register Heatcon's mark — a specific, three-dimensional arrangement of the HCS9200B Composite Repair Set's user-interface components. The Examining Attorney asserts that Heatcon's specific arrangement of the user-interface components is a functional feature of the goods under Trademark Act Sections 2 and 23.

Heatcon also appeals the Examining Attorney's final refusal to allow the drawing of Heatcon's mark. The Examining Attorney asserts that the drawing is not accurate under 37 C.F.R. §2.52(b)(4).

Heatcon respectfully asserts that the Examining Attorney has not established a *prima facie* case that Heatcon's specific, three-dimensional arrangement of the user-interface components is a functional feature of equipment for controlling and recording the application of heat and pressure in a process for repairing and/or fabricating bonded composite materials. Moreover, Heatcon respectfully asserts that evidence used by the Examining Attorney actually demonstrates that Heatcon's specific, three-dimensional arrangement of the user-interface components is not a functional feature of the equipment. Heatcon also respectfully asserts that the drawing of the mark as amended in Heatcon's response filed 5 January 2012 is accurate.

Thus, Heatcon's mark should be registered on either the Principal Register or the Supplemental Register.

Before addressing the Examining Attorney's assertions I would like to make clear the mark that Heatcon seeks to register. The mark is the specific, three-dimensional arrangement, as a whole, of the user-interface components for the HCS9200B

Composite Repair Set. Below is the drawing of the mark, as amended by Heatcon in its 5 January 2012 response, and the description of the mark.

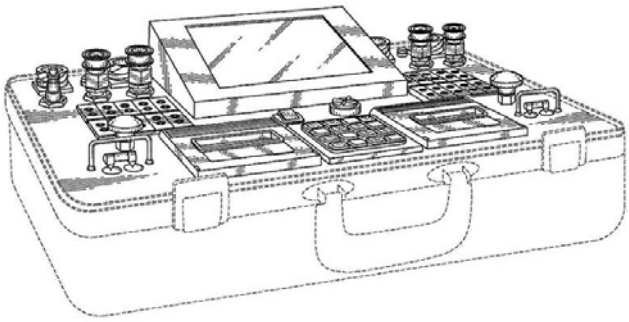

The mark consists of a three-dimensional configuration of the arrangement of the HCS9200B Composite Repair Set's (Hot Bonder's) user interface components featuring a display panel located in the middle of the top half of the interface, an output power LED indicator left of the display panel, another output power LED indicator right of the display panel, an input power receptacle left of the display panel, another input power receptacle right of the display panel, an output power receptacle left of the display panel, another output power receptacle right of the display panel, an air input port left of the display panel, an electric vacuum pump power receptacle right of the display panel, a vacuum out port left of the display panel, another vacuum out port right of the display panel, a vacuum monitor port left of the display panel, another vacuum monitor port right of the display panel, a set of ten thermocouple jacks left of the display panel and below the vacuum ports, another set of ten thermocouple jacks right of the display panel and below the vacuum ports, a power switch below the display panel, an alarm also below the display panel and right of the power switch, a vacuum control regulator below the thermocouple jacks left of the display panel, another vacuum control regulator below the thermocouple jacks right of the display panel, a circuit breaker switch below the vacuum control regulator left of the display panel, another circuit breaker switch below the vacuum control regulator right of the display panel, a keypad below the power switch and alarm, a printer exit left of the keypad, another printer exit right of the keypad, and the face plate that these components are located on. The broken lines depicting the case, handle and latches indicate placement of the mark on the goods and are not part of the mark.

Thus, the mark that Heatcon seeks to register on either the Principal Register or the Supplemental Register is the specific arrangement of the user-interface components, as a whole, for the HCS9200B Composite Repair Set; not the specific, individual configuration of each of the user-interface's components (*e.g.* the display panel, vacuum ports and thermocouple jacks). Each of the specific, individual component configurations is one of many elements that together make the whole user-interface. Thus, the configuration of each of the specific, individual components of the user-interface is just one of many elements of Heatcon's mark.

LAW

Section (e)(5) of 15 U.S.C. §1052 states that, "No trademark by which the goods of the applicant may be distinguished from the goods of others shall be refused registration on the principal register on account of its nature unless it consists of a mark which comprises any matter that, *as a whole* [emphasis added], is functional." And section (c) of 15 U.S.C. §1091 states that, "For the purposes of registration on the supplemental register, a mark may consist of any trademark, symbol, label, package, *configuration of goods* [emphasis added], name, word, slogan, phrase, surname, geographical name, numeral, device, any matter that *as a whole* [emphasis added] is not functional, or any combination of any of the foregoing, but such mark must be capable of distinguishing the applicant's goods or services.

The U.S. Supreme Court has explained that, "in general terms a *product* [emphasis added] feature is functional and cannot serve as a trademark, if it [the

product feature] is essential to the use or purpose of the article or if it [the product feature] affects the cost or quality of the article" *Qualitex, Co. v. Jacobson Prods. Co.*, 514 U.S. 159, 165 (1995). Although TMEP §1202.02(a) uses *Qualitex* to define the term functional in the trade dress context, the statement found in TMEP §1202.02(a) is a little misleading. TMEP §1202.02(a) states that, "In general terms, trade dress is functional, and cannot serve as a trademark, if a feature of that trade dress 'is essential to the use or purpose of the article or if it affects the cost or quality of the article'". Because the TMEP replaces the second occurrence of "product" with "trade dress", one can reasonably interpret "a feature of that trade dress" to mean an element, component or portion of the trade dress, and thus conclude that a product feature is functional if an element, component or portion of the product feature is essential to the use or purpose of the product or if it affects the cost or quality of the product. Such a conclusion, however, contradicts 15 U.S.C. §§1052(3)(5) and 1091(c), which require that the mark (product feature), as a whole, be considered, not the mark's (product feature's) elements, components or portions, individually.

To help determine whether or not a product feature is functional, one normally considers the following four factors know as the *Morton-Norwich* factors.

1) the existence of a utility patent that discloses the utilitarian advantages of the design sought to be registered;
2) advertising by the applicant that touts the utilitarian advantages of the design;
3) facts pertaining to the availability of alternative designs; and

4) facts pertaining to whether the design results from a comparatively simple or inexpensive method of manufacture.

In re Morton-Norwich Prods., Inc., 671 F.2d 1332 (C.C.P.A. 1982). TMEP §1202.02(a)(v).

ARGUMENT

I. The Examining Attorney fails to show that the three-dimensional configuration of the arrangement as a whole of the user-interface components is functional

When a mark is refused registration on functionality grounds, the Examining Attorney must establish a *prima facie* case that the mark sought to be registered is functional, at which point the Applicant can overcome the refusal by presenting evidence that rebuts the Examining Attorney's *prima facie* case. TMEP §1202.02(a)(iv). Here, the Examining Attorney refused to register Heatcon's mark on grounds of functionality because each of the elements or components (e.g. the display panel, vacuum ports and thermocouple jacks) of the whole, specific arrangement of the user-interface components is functional. However, the existence of functional elements or components in the specific arrangement does not establish functionality of the specific arrangement, as a whole. As the proper application of the *Morton-Norwich* factors show, the Examining Attorney has failed to establish a *prima facie* case that Heatcon's mark is functional. Moreover, the evidence on record shows that Heatcon's mark is not functional.

A. The Functionality Doctrine

The functionality doctrine prevents trademark law from inhibiting legitimate competition by not allowing a producer to claim a useful or functional feature of a product as his/her trademark and thereby prevent others from using the useful or functional feature in their product. A [product] feature is functional if it is "essential to the use or purpose of the [product] or when it affects the cost or quality of the [product]." *TrafFix Devices, Inc. v. Mktg. Displays, Inc.*, 532 U.S. 23, 33 (2001); *see also* TMEP §1202.02(a)(iii)(A). A trademark may include one or more features of a product, and may be protected as a trademark if doing so does not provide the owner of the trademark or producer of the product the ability to prevent competitors from using the product feature on the competitor's product. Indeed, it is settled that even if one or more individual elements of an applied-for mark includes a functional feature of a product, the overall aggregation, relationship and arrangement of the elements that comprise the mark can be non-functional. "When the thing claimed as trade dress or a trademark consists of a combination of individual design features, then it is the functionality of the overall combination that controls. Thus, an overall design combination of individually functional items is protectable because while the pieces are individually functional, this particular combination of those pieces is not functional." *McCarthy On Trademarks and Unfair Competition* § 7:76 (2010); *KeyStone Retaining Wall Sys., Inc. v. Westrock, Inc.*, 997 F.2d 1444, 1449 (Fed. Cir. 1993) (regarding functionality, jury received appropriate instruction to "consider the [trade dress] design as a whole and [ ] not focus on isolated elements of the design"; holding that the Ninth Circuit in *Fuddruckers, Inc. v. Doc's B.R. Others, Inc.,* 826 F.2d 837, 842 (9th Cir.

1987), was correct in stating that the proper inquiry is "whether the whole collection of elements taken together are functional"); *In re Chesebrough-Pond's, Inc.*, 224 USPQ 967, 968 (TTAB 1984) (where all individual aspects are functional, the "overall composite design" can be nonfunctional).

In *In re Honeywell Inc.*, 8 USPQ2d 1600 (TTAB 1988), for example, the Board held that a product configuration mark was not functional despite the fact that it included some functional elements, because competitors did not need to use the particular combination of elements claimed by the applicant. Finding no "evidence of use by competitors . . . for so many years, despite applicant's apparent lack of any patent and trademark protection for it," the Board concluded that "the number of alternative designs available to competitors, although limited, is sufficient for this product." *Id.* at 1604. Similarly, in *Cartier, Inc. v. Four Star Jewelry Creations, Inc.*, 348 F. Supp. 2d 217 (S.D.N.Y. 2004), the evidence showed that a "bar on manufacturing a watch with a combination of features composing Cartier's trade dress as a whole would not seriously limit [the] options [of] a watch designer," which, the court held, "further substantiates the view that the designs are nonfunctional." *Id.* at 225; *see also*, *e.g.*, Restatement (Third) Unfair Competition § 17, cmt. b (1995) ("The fact that the overall design or combination contains individual features that are themselves functional does not preclude protection for the composite. . . . Protection of the overall design, however, will not preclude others from adopting the functional constituents.").

B. There is No Evidence That Protection for Heatcon's Mark Will Disadvantage Competitors

The particular arrangement of user-interface components comprising Heatcon's mark is not necessary to the function of each of the individual components in a composite-repair set (hot bonder), and not necessary to the function of a hot bonder, as a whole. A hot bonder is a piece of equipment used to control the application of heat and vacuum of a repair made to a composite material. Heatcon's mark, as shown and described above (pp. 3 – 4), is merely one of a virtually infinite number of ways to arrange user-interface components for a hot bonder. As the third party designs proffered by the Examining Attorney show, there are many other ways to arrange user-interface components for a hot bonder. Exhibit 1, pp. 1–33. As demonstrated by the evidence of third-party designs for hot bonders in the record, it is clear that a prohibition on the copying of the Heatcon's particular arrangement, as a whole, of user-interface components would not limit others' abilities to manufacture or sell hot bonders. Thus, trademark protection for that particular arrangement, as a whole, of user-interface components will not allow Heatcon to prevent competitors from selling hot bonders.

C. Application of the *Morton-Norwich* Factors Confirms That Heatcon's Mark is Non-Functional

In addition to the foregoing principles, functionality is determined by the application of the factors set forth in *In re Morton-Norwich Prods., Inc.*, 671 F.2d 1332, 1340–41 (C.C.P.A. 1982):

(1) the existence of a utility patent disclosing the utilitarian advantages of the design;

(2) advertising materials in which the originator of the design touts the design's utilitarian advantages;

(3) the availability to competitors of functionally equivalent designs; and

(4) facts indicating that the design results in a comparatively simple or cheap method of manufacturing the product.

Here, each factor fails to suggest that Heatcon's mark is functional.

1. No Utility Patent Covers Heatcon's Mark

To determine the relevance of a utility patent under the *Morton-Norwich* test, "[i]t is important to read the patent to determine whether the patent *actually claims* [emphasis added] the features presented in the proposed mark. . . . If it does not, . . . then *the probative value of the patent as evidence of functionality is substantially diminished or negated entirely* [emphasis added]." TMEP §1202.02(a)(v)(A); *accord TrafFix*, 532 U.S. at 34 (whether a product's features "are functional by reason of their inclusion in the claims" of a utility patent is guided by whether the feature "serve[s] a purpose within the terms of the utility patent" or is "a useful part of the invention"); *In Re UDOR U.S.A., Inc.*, 89 USPQ2d 1978, 1982 (TTAB 2009) (existence of a utility patent did not weigh in favor of functionality where Examining Attorney did not "demonstrate convincingly" that the design had "inherent utilitarian value based upon the claims of the patented technology"; the design features did not "serve a function within the terms of

the utility patent, and [were] not shown as useful parts of the claimed invention"); *In Re Zippo Mfg. Co.*, 50 USPQ2d 1852, 1853–54 (TTAB 1999) (utility patent not probative where the design depicted in the patent was "different from the configuration applicant seeks to register"); *In Re Weber-Stephen Prods. Co.*, 3 USPQ2d 1659, 1664 (TTAB 1987) (utility patent did not bar registration where "nothing in the patent discloses any utilitarian advantages of this particular design").

The Examining Attorney uses U.S. Patent 6,976,519 issued to Bivens (Bivens) to suggest that Heatcon's mark is functional. Specifically, the Examining Attorney asserts in her Final Office Action that "like [Heatcon's] interface, the patent registrant's goods incorporate vacuum ports, thermocouple connectors, vacuum pump, sensors and video display" and in support recites claim 20 of Bivens. Claim 20 is shown below:

> 20. A portable curing system comprising, in combination:
>
> a carrying case;
>
> a controller located within the carrying case and having a microprocessor;
>
> a vacuum pump located within the case and having at least two vacuum ports for connection of vacuum lines;
>
> at least two vacuum sensor connectors located within the carrying case for receiving leads of vacuum sensors;
>
> at least two heater connectors located within the carrying case for receiving leads of electrical heaters;
>
> at least two temperature sensor connectors located within the carrying case for receiving leads of thermocouples;
>
> wherein the controller is operably connected to the vacuum pump, the vacuum sensor connectors, the

heater connectors, and the temperature sensor connectors;

a touch-screen video display mounted within the carrying case and operably connected to the controller to display information from the controller and input information to the controller; and

wherein the video display is pivotable between a stowed position and a viewing position.

Heatcon's mark is **the** specific arrangement, as a whole, of the user-interface components for the HCS9200B hot bonder; not **any** arrangement of specific components within a portable curing system. Bivens' Claim 20 (and each of the remaining claims 1 – 19) does not claim a specific arrangement, as a whole, of the portable curing system's user interface. Bivens' claim 20 simply claims a system that includes a carrying case with each of the user-interface components — vacuum sensor connectors, heater connectors, temperature sensor connectors, and a touch-screen video display — located within the carrying case. Bivens' claim 20 is silent on how these components are arranged to form a user-interface for the portable curing system. Furthermore, in Bivens' specification, Bivens does not discuss a particular arrangement for the user-interface components; Bivens simply shows in figures 1 and 2 one possible arrangement of a virtually infinite number of possible arrangements.

Thus, Bivens has no probative value as to whether or not the specific arrangement, as a whole, of the user-interface components for Heatcon's HCS9200B hot bonder is functional. Because of this, this *Morton-Norwich* factor does not suggest that Heatcon's mark is functional.

2. Heatcon Has Not Promoted Any Utilitarian Advantages of Heatcon's Mark

Heatcon has not promoted the specific arrangement, as a whole, of the user-interface components for the HCS9200B hot bonder as having utilitarian advantages. In two Final Office Actions, one dated 21 September 2012 and the other dated 28 July 2014, the Examining Attorney asserts that Heatcon has touted utilitarian advantages of the specific arrangement, as a whole, of the user-interface components for the HCS9200B hot bonder. To support this assertion, the Examining Attorney shows a portion of Heatcon's website and other third party websites that discuss the hot bonder. But, neither the discussion of the hot bonder on Heatcon's web site, nor the discussion of the hot bonder on third party websites, touts utilitarian advantages of the specific arrangement, as a whole, of the user interface components for the HCS9200B hot bonder.

Heatcon's website shows a list of components that are included in the hot bonder, and then provides why each of the listed components are included in the hot bonder. The list also includes a reference to the ergonomic design of the hot bonder. This reference refers to the hot bonder, not the hot bonder's specific arrangement, as a whole, of the user-interface components. The list shown on Heatcon's website does not include a reference to the specific arrangement, as a whole, of the user-interface components for the HCS9200B hot bonder.

Thus, this *Morton-Norwich* factor also does not suggest that Heatcon's mark is functional.

3. Alternative Designs Available Are Functionally Equivalent

A review of the third-party arrangements of user-interface components in the record demonstrates that other manufacturers of hot bonders employ a limitless variety of arrangements. Indeed, the Examining Attorney has cited ample evidence of alternative arrangements used by other manufacturers, all of which are equally feasible, cost comparable alternatives to the specific arrangement of user-interface components that Heatcon uses for the HCS9200B hot bonder. Exhibit 1, pp 1 - 33. For example:

1) Wichitech makes a hot bonder whose user interface includes a display screen located on the underside of the carrying-case's lid.
2) BriskHeat makes a hot bonder whose user interface includes a display screen located along the bottom edge of the user interface.
3) Applied Heat makes a hot bonder whose user interface includes power receptacles located on the side of the carry case.
4) Aeroform France makes a hot bonder whose user interface includes thermocouple couplers in a row located along the top edge of the user interface. Aeroform France also makes a hot bonder whose user interface includes an analog pressure gauge.
5) ATACS makes a hot bonder whose user interface includes a ramp portion on which is located a display screen, keypad and couplers.
6) Zimac makes a hot bonder whose user interface includes couplers located on the side of the carrying case, and a laptop mounted on a ramped top.

The fact that other manufacturers of hot bonders use different arrangements of user-interface components to configure their respective user interfaces is strong evidence that Heatcon's specific arrangement, as a whole, of user-interface components does not give Heatcon any advantage over its competitors. *See Zippo Mfg.*, 50 USPQ2d at 1854.

Because the availability of numerous alternative configurations strongly supports a finding of non-functionality, this factor suggests that Heatcon's mark is non-functional.

4. Heatcon's Arrangement Of User-Interface Components Is Not A Result Of A "Simple Or Cheap Method Of Manufacturing" And Provides No Utilitarian Advantage

Heatcon has provided statements in Heatcon's response to the Examining Attorney's First Office Action showing that Heatcon's specific arrangement of user-interface components does not appear to be simpler or less expensive to make than other manufacturer's arrangements. Because Heatcon does not know how expensive or simple the arrangements of user-interface components for hot bonders made by other manufacturer's is, Heatcon can only say that Heatcon's specific arrangement of user-interface components "does not appear to be simpler or less expensive". In addition to this statement, Heatcon describes in Heatcon's response to the Examining Attorney's First Office Action how Heatcon assembles the specific arrangement of user-interface components. In the same response, Heatcon also states that there are, and provides examples of, equally efficient and/or competitive designs for the specific arrangement of the user-interface components (Exhibit 2, pp 1-8). This suggests that Heatcon's specific arrangement of user-interface components does not provide a utilitarian advantage over the arrangement of user-interface components used by other manufacturers.

The Examining Attorney does not explain how either of these statements fails to suggest that Heatcon's specific arrangement of user-interface components is non-functional, nor does she cite any evidence that Heatcon's specific arrangement of

user-interface components lowers production costs, or provides a utilitarian advantage over other arrangements of user-interface components.

Accordingly, this factor also suggests that Heatcon's mark is non-functional.

In sum, based on the analysis above, which includes consideration of the *Morton-Norwich* factors, the Examining Attorney has not made out a *prima facie* showing of functionality. The Examining Attorney's application of *Morton-Norwich's* first two factors is not accurate, and each of the four *Morton-Norwich's* factors actually supports Heatcon's position. Moreover, Heatcon's specific arrangement, as a whole, of user-interface components for the HCS9200B hot bonder is not essential to the use or purpose of the hot bonder, and there is no evidence that protecting Heatcon's specific arrangement, as a whole, will disadvantage Heatcon's competitors.

II. The Drawing Of The Mark As Amended In Heatcon's Response Filed 5 January 2012 Is Accurate

Heatcon respectfully asserts that the drawing of the mark, as amended in Heatcon's Response filed 5 January 2012, is accurate. Specifically, the components of the user interface currently shown in solid lines should remain in solid lines because

each of these components is an element of the specific, three-dimensional arrangement, as a whole, of the user-interface components of the HCS9200B Composite Repair Set. Solid lines must be used on the drawing to show the elements of the product or container that are claimed as part of the mark; and broken or dotted lines must be used to indicate the portion of the product or container that is not claimed as part of the mark. (*See 37 C.F.R. §2.52(b)(4) and TMEP §1202.02(c)(i)*). Because the mark is the specific, three-dimensional arrangement, as a whole, of the user-interface components of the HCS9200B, the whole user interface should be shown in solid lines. And although the mark includes elements that should be shown in broken or dotted lines because they are functional, if doing so would result in an unclear depiction of the mark, the applicant may use solid lines to show the elements. (*See the sixth and seventh full paragraphs of TMEP §1202.02(c)(i)*). If the drawing of the mark, as amended in Heatcon's Response filed 5 January 2012, were amended to show each component of the whole user interface in broken or dotted lines, then the drawing of the mark would not include any solid lines. And thus, the specific arrangement, as a whole, of the user-interface components of the HCS9200B Composite Repair Set would not be clearly depicted in the drawing.

CONCLUSION

For all of the foregoing reasons and in view of the evidence of record, Heatcon's specific, three-dimensional arrangement, as a whole, of the user-interface components

for the HCS9200B Composite Repair Set is not functional, and should be approved for registration on the Principal Register or Supplemental Register.

DATED this 1st day of June 2015.

Respectfully submitted,
JANEWAY PATENT LAW PLLC

John M. Janeway
Attorney for Applicant
Registration No. 45,796
Ste. 506 -- 2208 NW Market Street
Seattle, WA 98107
(206) 708-7705

EXHIBIT 1

http://www.wichitech.com/ 02/10/2012 09:54:19 AM

WICHITECH INDUSTRIES INC.
CLEARLY SUPERIOR™

Email: wichitech@wichitech.com
Toll Free: 800.776.4277
Fax: 410.244.1968

Home | News | Our Customers | NSN Numbers | Downloads | Tradeshows | About WichiTech | Contact Us | Request Information

Product & Services

Search Catalog: By Keyword GO

- Hot Bonders
- Non Destructive Testing Device (Tap Hammer)
- Thermocouple Welder
- Blanket Test System
- Oven Control System
- Accessories

WichiTech Industries, Inc. Designs and Manufactures

Safe, Reliable and Value Packed Hot Bond Composite Repair Systems

Hot Bonders

Non Destructive Testing Device (Tap Hammer)

Thermocouple Welder

Blanket Test System

Oven Control System

Accessories

Whether you need the industry's smallest, most powerful and economical hot bonder for curing composite repairs, or the world's hottest hot bonder; a portable composite repair system that sets industry standards for ease of operation, safety, reliability and value with the ability to repair metal, Kevlar, carbon, and fiberglass, WichiTech is the right solution for you.

To ensure this we carry all needed accessories including: heating blankets, an external HB-1 printer, vacuum pump, student training kit, a portable thermocouple welder, handheld blanket tester and more.

www.wichitech.com

WichiTech Industries, Inc.
1120 North Charles Street, Suite 103, Baltimore, MD 21201
Toll Free: 1.800.776.4277, Phone: 410.244.1966, Fax: 410.244.1968
Email: wichitech@wichitech.com

Privacy Policy Site Map

Copyright © 2011 WichiTech Industries, Inc., All Rights Reserved

Site created by ThomasNet Web Solutions and powered by Navigator Platform

http://hotbonders.wichitechindustries.com/viewitems/hot-bonders/hb-2-composite-repair-system?
02/10/2012 09:54:49 AM

WICHITECH INDUSTRIES INC.
CLEARLY SUPERIOR™

Email: wichitech@wichitech.com
Toll Free: 800.776.4277
Fax: 410.244.1968

HB-2 Composite Repair System

Check up to five results to perform an action.

The world's hottest hot bonder, the WichiTech HB-2 is a powerful, portable composite repair system that sets industry standards for ease of operation, safety, reliability and value. This durable system repairs metal, Kevlar, carbon, boron and fiberglass simply, safely and cost-effectively. HB-2 makes fast, flawless work of large or small repair jobs. The 35 pound USA-built unit is as simple to program as a microwave with its easy-to-read digital display and menu listed functions.

The custom made HB-2 is individually manufactured to your specifications. Select from a single zone unit up to a dual zone unit with two independent programmed heating zones, 20 amps each, and two individual adjustable vacuum zones or anywhere in between.

http://hotbonders.wichitechindustries.com/viewitems/hot-bonders/hb-2-composite-repair-system?
02/10/2012 09:54:49 AM

larger image

These twin features permit you to perform two independently-programmed cures simultaneously. Fail-safe protection is provided by the monitoring of multiple thermocouples, and audible alarms guard against temperature and vacuum conditions that could ruin the repair. Rugged field proven components shock mounted inside a tough, impact-resistant case mean years of reliable service from the HB-2 value engineered for first-time, every-time top of the line performance.

Request Information | Compare Items

Results Per Page : 25

Results 1 - 4 of 4 1

P/N	Description	NSN	Size
F4HB2006	HB-2 Dual Zone Composite Repair System	4920-01-445-4529	21" x 14" x 8"
F4HB2007	HB-2 Single Zone Composite Repair System	N/A	21" x 14" x 8"
F4HB2005E	HB-2 Dual Zone Explosion Proof Composite Repair System	4920-01-553-8724RN	21" x 14" x 8"
F4HB2007E	HB-2 Single Zone Explosion Proof Composite Repair System	4920-01-556-7883RN	21" x 14" x 8"

Results 1 - 4 of 4 1

www.wichitech.com

WichiTech Industries, Inc.
1120 North Charles Street, Suite 103, Baltimore, MD 21201
Toll Free: 1.800.776.4277, Phone: 410.244.1966, Fax: 410.244.1968
Email: wichitech@wichitech.com

Privacy Policy Site Map

Copyright © 2011 WichiTech Industries, Inc., All Rights Reserved

Site created by ThomasNet Web Solutions and powered by Navigator Platform

http://www.briskheat.com/p-317-acr-3-hot-bonder.aspx 02/10/2012 09:55:57 AM

BriskHeat®
Your Heating Specialist Since 1949

Translation Powered by Google
1-800-848-7673
614-294-3376

About Us | Products | Applications | Industries | News | Distributors/Reps | Contact Us | Personal Assistant

Search

Login Shopping Cart (0) Your Account

Product Solutions

- NEW Products
- Value-Priced Bundles
- Cloth Heating Jackets
- Silicone Rubber Heating Blankets
- XtremeFLEX® Heating Tapes
- Insulators
- Drum / Pail Heaters
- IBC / Tote Tank Heaters
- Laboratory Mantle Heaters
- Enclosure / Control Panel Heaters
- Resistance Wire
- Temperature Controllers
- Hopper Heating Systems
- Hazardous-Area Heaters and Controls
- Hot Bonders and Composite Blankets
- Aircraft Infrared NDT Kits

Products → Composite Curing Solutions → ACR 3 Hot Bonder

SHARE

Products

BriskHeat®

ACR 3 Hot Bonder

EASIER • BETTER

- Easy-to-Use Full-Color HD Touch-Screen
- NEW Fast Dual Vacuum System: Both a Built-in Electric Pump and Vacuum Venturi
- NEW Rugged Carrying Case and Improved Design
- NEW Handles and Wheels for Easy Transport

http://www.briskheat.com/p-317-acr-3-hot-bonder.aspx 02/10/2012 09:56:39 AM

BriskHeat®
Your Heating Specialist Since 1949

Translation Powered by Google
1-800-848-7673
614-294-3376

About Us | Products | Applications | Industries | News | Distributors/Reps | Contact Us | Personal Assistant

Search

Login Shopping Cart (0) Your Account

Product Solutions

- NEW Products
- Value-Priced Bundles
- Cloth Heating Jackets
- Silicone Rubber Heating Blankets
- XtremeFLEX® Heating Tapes
- Insulators
- Drum / Pail Heaters
- IBC / Tote Tank Heaters
- Laboratory Mantle Heaters
- Enclosure / Control Panel Heaters
- Resistance Wire
- Temperature Controllers
- Hopper Heating Systems
- Hazardous-Area Heaters and Controls
- Hot Bonders and Composite Blankets
- Aircraft Infrared NDT Kits

Products → Composite Curing Solutions → ACR 3 Hot Bonder

SHARE

Products

BriskHeat®

ACR 3 Hot Bonder

EASIER • BETTER

- Easy-to-Use Full-Color HD Touch-Screen
- NEW Fast Dual Vacuum System: Both a Built-in Electric Pump and Vacuum Venturi
- NEW Rugged Carrying Case and Improved Design
- NEW Handles and Wheels for Easy Transport

APPLIED HEAT

Tollfree: 1-888-527-2923
Tel: 480-753-0044 Fax: 480-753-0045

practical. portable. durable. affordable.

REAL LIFE EQUIPMENT

Designed with the End User In Mind

Applied Heat is committed to providing affordable, operator-friendly equipment that makes it easy to get the job done right. No whistles and bells, just rugged, practical common-sense performance. Applied Heat offers a complete line of composite repair equipment. If we don't have what you're looking for, we'll do our best to help you locate it. At Applied Heat, we want to make your job easier. Give us a call.

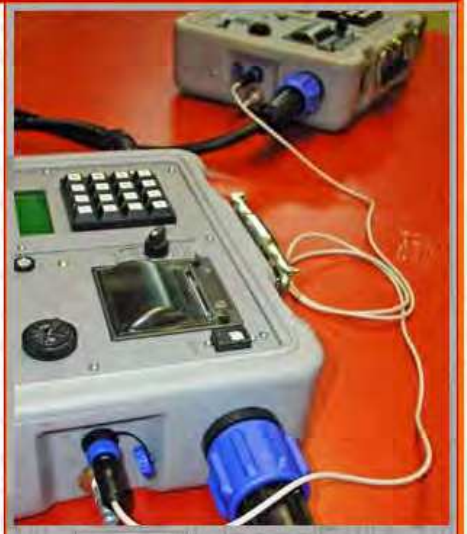

Applied Heat offers:

Hot Bonders for all situations
PACS--Phosphoric Acid Anodizing Containment System
Heat Blankets in stock and custom sizes
Thermocouple Accessories and Supplies.

APPLIED HEAT

Tollfree: 1-888-527-2923
Tel: 480-753-0044 Fax: 480-753-0045

Hot Bonders

Applied Heat Composite Repair Consoles combine logical, easy to use programming with exceptional performance and an affordable price tag.

The Model A-150B-LB Link-Bonder is a Single Zone Bonder with Dual Zone Capabilities. Linked via a communications cable, two single zone bonders become a fully functional Dual Zone Hot Bonder.

The Model A-150B-LB-HL affords all the features of the LB and is suitable for operation in Class 1, div 2 Hazardous Locations

The Model A-150B-LB-EV contains an internal vaccuum pump.

STANDARD FEATURES include:

In Lid Storage for power cords and Vacuum Hoses
On the Fly program modification
Link-Bonder Function
Invisible Thermocouple Function
Automatic Control TC Selection TCs 1 thru 12
Real Time Temperature Display
Power Out Cure Recovery
Temperature Motion Error Protection
12 TCs per zone
High Speed Thermal Printer (w 25 year thermal paper)
Internal venturi vacuum pump 28 In. Hg Vacuum
30 Amp Capacity

PORTABLE With outside dimensions of 11" x 13" x 8", weighing only 14 lbs. the A-150 fits into overhead bins on all commercial aircraft.. Power cords and accessories store in lid.

PRACTICAL Common-sense programming makes operation simple and concise. Easy-read screen eliminates confusion.

DURABLE Water, solvent and impact resistant, the severe-duty rotomolded case is the strongest plastic case on the market today. The aircraft aluminum faceplate is powdercoated for maximum durability.

http://www.directindustry.com/prod/aeroform-france/hot-bonders-for-composite-repair-37675-322172.html
02/10/2012 10:00:30 AM

Newsletter | Exhibit on DirectIndustry

Direct INDUSTRY

The Virtual Industrial Exhibition

Products | Catalogues | News | Videos | Classifieds

Search Products

Home page > Products > Product definitions > > **AHB 380 D - Aeroform France**

aeroform FRANCE

Aeroform France

video

Products | Catalogues | News | Exhibitions

Hot bonder for composite repair

AHB 380 D

The AHB380-D & AHB380-S series Hot Bond Controllers are an advanced composite, metal/metal bonding, manufacturing and repair system designed to meet all the demands of today's repair specifications but with tomorrow's requirements in mind.

More specifications...

Request Documentation | Request a Quote | Where to buy this product ? | Manufacturer's contact details

http://www.directindustry.com/prod/aeroform-france/hot-bonders-for-composite-repair-37675-322172.html
02/10/2012 10:00:30 AM

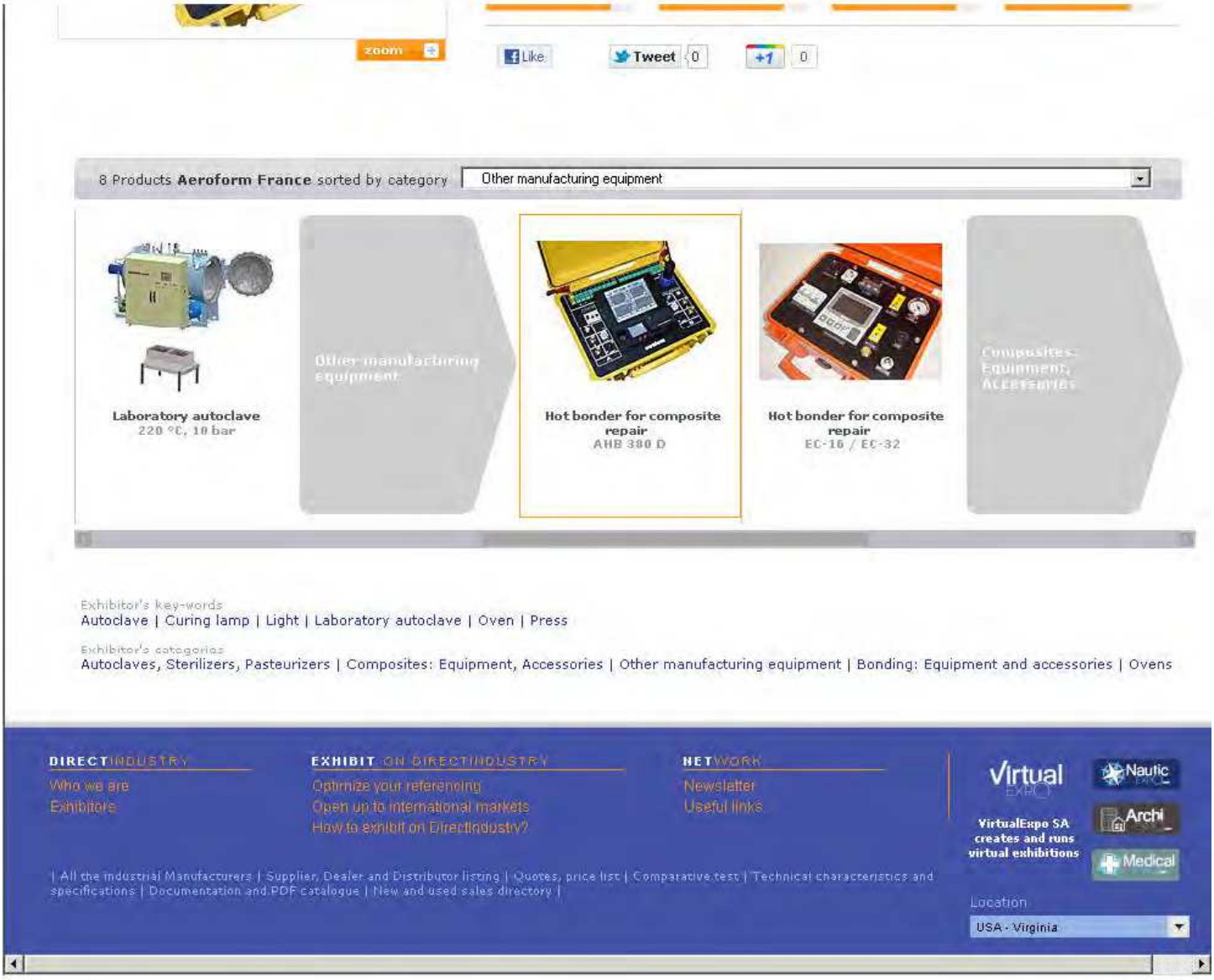

http://www.directindustry.com/prod/aeroform-france/hot-bonders-for-composite-repair-37675-322172.html
02/10/2012 10:04:56 AM

Newsletter | Exhibit on DirectIndustry

Direct INDUSTRY

The Virtual Industrial Exhibition

Products | Catalogues | News | Videos | Classifieds

Search Products

Home page > Products > Product definitions > > **AHB 380 D - Aeroform France**

aeroform FRANCE

Aeroform France

video

Products | Catalogues | News | Exhibitions

zoom

Hot bonder for composite repair

EC-16 / EC-32

The Eco-Bonders EC-16 or EC-32 are economical repair systems for composite parts and intended for the marine and wind industries .
The creation of program is done without manual.
Monitoring of the set point and process values.
USB for data transfer and data storage.
Compact, light and very friendly units.
Real time chart tracking of thermocouple.
Change of colour (red screen) if alarm (eg: open TC □).
Very quiet venturis allowing a level of vacuum of 800 mbar.
Internal filtered air bleed to vent the case.
Protection devices against earth leakage (30mA) ...
Possibility to use this Ecobonder with our Oil-less vacuum pump PAV5M to do repairs on site.

SPECIFICATIONS:

More specifications...

http://www.directindustry.com/prod/aeroform-france/hot-bonders-for-composite-repair-37675-322172.html
02/10/2012 10:04:56 AM

Request Documentation | Request a Quote | Where to buy this product ? | Manufacturer's contact details

Like | Tweet 0 | +1 0

8 Products **Aeroform France** sorted by category: Other manufacturing equipment

Other manufacturing equipment

Hot bonder for composite repair
AHB 380 D

Hot bonder for composite repair
EC-16 / EC-32

Composites: Equipment, Accessories

Autoclave for aeronautical composite material polymerisation
LAB 115/120/1530

Exhibitor's key-words
Autoclave | Curing lamp | Light | Laboratory autoclave | Oven | Press

Exhibitor's categories
Autoclaves, Sterilizers, Pasteurizers | Composites: Equipment, Accessories | Other manufacturing equipment | Bonding: Equipment and accessories | Ovens

DIRECTINDUSTRY
Who we are
Exhibitors

EXHIBIT ON DIRECTINDUSTRY
Optimize your referencing
Open up to international markets
How to exhibit on Directindustry?

NETWORK
Newsletter
Useful links

Virtual EXPO | Nautic | Archi | Medical

VirtualExpo SA creates and runs virtual exhibitions

| All the Industrial Manufacturers | Supplier, Dealer and Distributor listing | Quotes, price list | Comparative test | Technical characteristics and specifications | Documentation and PDF catalogue | New and used sales directory |

Location
USA - Virginia

ABARIS TRAINING on-line

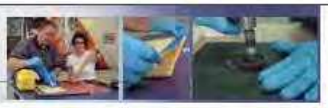

Portable Repair Equipment

Portable repair equipment is commonly referred to as hot bonders. Produced by a variety of manufacturers, most hot bonders are suitcase-sized or smaller and are used to control the application of heat and vacuum to a composite repair. They are especially useful for field repairs, in situations where it is not possible to remove the damaged part for repair. They also can be used to monitor and control temperature in oven-cured repairs.

Hot Bonder Manufacturers

- Applied Heat
- ATACS
- BH Thermal Corp.
- Heatcon
- Pyrometric Service Co.
- WichiTech

Heatcon Composite Systems HCS9200

Applied Heat A150

ATACS 8024

WichiTech HB-2

Hot bonders are most commonly used to control heat blankets, but can also be used to control heat lamps, hot air guns, or even ovens. They can be programmed to store as many as 30 different cure cycles in memory. They require an electrical power source, and control the heating through thermocouples.

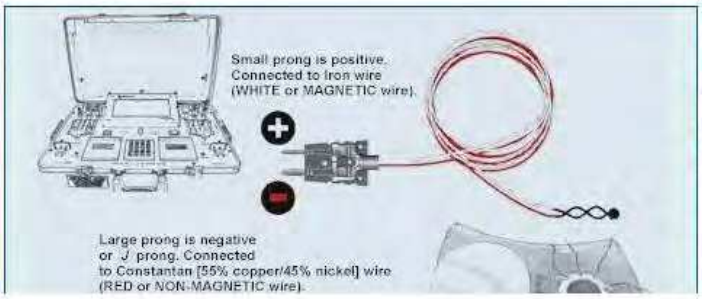

A composite repair using a hot bonder and heat lamps.
Source:Abaris

Heat blankets come in a variety of different shapes and sizes.
Source:Abaris

A composite core repair showing thermocouple placement and the

About SFA

SFA Products

Global Sales & Support

Contact

Composite Repair Equipment

Compact, portable and capable of reproducing the precision and controllability found in our autoclaves and ovens. SFA's range of Heat Lamps and Hot Bonders enable composite repairs to be carried out in any environment.

Designed to be compliant with Airbus Industrie, Boeing, Eurofighter, GKN Westland and MoD composite repair specifications, the range includes discrete portable units through to fully computer controlled systems capable of producing factory standard results even in hostile environments.

Heatlamps

SFA UK supply a range of high performance infrared Mobile Lamp Arrays fitted with integral ramp and dwell timers, over-temperature trip and built-in interfaces for external control. The

Brochure Request

atacs products inc. »composite repair systems:

Atacs 8024-2: DUAL ZONE HOT BONDER

RELATED INFORMATION:

CLICK HERE TO SEE ALL *REPAIR EQUIPMENT & ACCESSORIES* »

DESCRIPTION

The ATACS Model 8024-2 Hot-Bonder is specifically engineered to perform high-temperature cure operations required to bond composite,metal or fiberglass repair materials. Two independent cures can be performed at once. The proprietary ATACS microprocessor-based system and software automatically control cure temperature to one of up to fifteen preselected profiles. The operator controls cure operation through a series of command menus and,with the aid of a liquid-crystal display and data logger, can monitor all facets of cure performance. The start-up procedure is easy and takes as little as 10 seconds to be in an active cure. The Hot-Bonder automatically alerts the operator to any conditions jeopardizing cure performance or safety.

USES

During the cure process, the 8024-2 continuously scans ALL active themocouples. The operator selects the desired control mode(hightest, lowest, or selected thermocouple), and the 8024-2 automatically tracks to the current highest or lowest thermocouple. Total management or the entire curing surface is in the graphic display guides the operator in preparing and performing the cure process. Cure status is constantly displayed in graphic and text form for instant operator information. If errors do occur, the 8024-2 will indicate the problem. The cure process and performance is documented by dot-matrix printer. This prints a log-record of thermcouple and vacuum status at selectable intervals of one to sixty minutes. Fault records are included automatically at each occurrence. Documentation ends with a printed graph of the profile, and summary of all cure faults and warnings.

Home
Bonders
Composite Repairs
Metal Treatments

Bonders :: Composite Hot Bonder

Portable Modular Composite Hot Bonder

Modular Hot Bonder

Provides optimum uniform heating using the Zimac hot bonding process. The system uses multi-zone control with the convenience of self attaching cells, blankets and conductive 2D and 3D geometry caul plates.

For Composite Hot Bonder Repairs and Doubler Repairs....

For Out-of Autoclave and Out of Oven Manufacture using Integral Heat....

For In-Autoclave precisely located responsive heat...

For composite cure of Glass, Kevlar, and Carbon, Epoxy systems....

For in-situ heat treatments such as retrogression aging of aluminum....

Use the Zimac Composite hot bonder.

© 2012 Zimac Laboratories Inc.. All Rights Reserved.

ZIMAC Laboratories Inc.

Home

Increase your productivity....Up to 4 bonders in one!!

Zimac introduces its new X-8 dual zone multi-feedback hot bonder. Drive up to 8 power outputs with dual or single zone and measure with up to 28 thermocouples for composite repair/manufacturing.

Southern Alberta Institute of Technology includes two Zimac composite hot bonders for instruction in traditional and new techniques.

The industry leader in composite hot bonders for composite repair, doublers, patch metal hot bonding, composite in-situ repair or hot bonding and integral heat in manufacturing or manufacturing repair.

Our Pledge:

To..... manufacturing, repair depots and technicians
Who..... want a composite hot bonder or metal patch bonder, or retrogression re-aging of 7075T6, or general stress relieving.

We offer..... an easy to apply blanket and cell methodology, no fuss monitoring, with locked in automatic reporting
That..... delivers precise uniform heat using up to 16 zones of independent control with patented heat cells and duty cycled heat blankets.

Unlike..... traditional methodologies dependant solely on one zone feedback, blanket technology, that have increased risk for hot spots and delaminating peripheral composite

We provide... a hot bonder control system and a patented process that ensures bond line

We provide: a hot bonder control system and a patented process that ensures bond line temperature to deliver quality hot bonding jobs, with highest productivity.

The P-8 Hot Bonder

The P-8 provides a sophisticated high power composite hot bonder for repair or manufacture of small to very large parts or repairs. It can be upgrade to P-16, P-24 or to P-32.

The Zimac team and the **National Research Council of Canada (NRC-CNRC)** developed the Hot Bonder originally to provide a simple way to apply heat for airframe repair when curing metal doublers. Other techniques and hot bonders relying solely on heat lamps and heat blankets can be unreliable. The technique developed included patented cells and a sixteen-zone computer controller with 32 channels for power output and up to 56 thermocouples. The cell technique coupled with up to 16 zones of feedback accounts for any heat sinking. The composite hot bonders are modular and start with the introductory P-8 hot bonder unit that provides 8 zones and 8 outputs for auxiliary or heat blanket control. To further support heat blanket repair during composite repair the unit can be upgraded to a P-16 unit that adds another 8 channels and 8 cells. The cells can be independently controlled or grouped. As individual heat sources they can be used to dam up the heat at heat sinks like stringers. Or, they can be used to shape the heat by our newly applied patent technique. Either method delivers 250, 350 or 450 +/- 10 degrees Fahrenheit into the composite.

You May Never Have to Buy a Heat Blanket Again!

...You can use our heaters on planar or 3D surfaces using standard vacuum bagging techniques . For out of planar complex geometries we have thermally conductive materials to make 3D caul plates (patents applied).

...Summary. With this technology you can shape your heat to the patch size and contour required to attain superb, uniform, precisely targeted heat with highest productivity from the Zimac hot bonder on metal or composites.

© 2011 Zimac Laboratories Inc.. All Rights Reserved.

Product Solutions
NEW Products
Value-Priced Bundles
NEW Etched Foil Heaters
Cloth Heating Jackets
Silicone Rubber Heating Blankets
XtremeFLEX® Heating Tapes
Insulators
Drum / Pail Heaters
IBC / Tote Tank Heaters
Gas Cylinder Warmers
Heating Cable
Snow Melting
Laboratory Mantle Heaters
Enclosure / Control Panel Heaters
Resistance Wire
Temperature Controllers
Hopper Heating Systems
Hazardous-Area Heaters and Controls
Hot Bonders and

Products → Composite Curing Solutions → ACR 3 Hot Bonder
SHARE
Products

BriskHeat®

ACR 3 Hot Bonder

EASIER • BETTER

- Easy-to-Use Full-Color HD Touch-Screen
- NEW Fast Dual Vacuum System: Both a Built-in Electric Pump and Vacuum Venturi
- NEW Rugged Carrying Case and Improved Design
- NEW Handles and Wheels for Easy Transport
- EASY Data Transfer with USB Flash Drive

View larger image

E-mail this product to a friend

Full Demonstration Video

Hot Bonders and Composite Blankets

Aircraft Infrared NDT Kits

Vacuum Curing / Debulking Tables

UPDATED 1.6 Software with Improved Interface and More Languages

Click here to download the FREE software update

Product Highlights

Easier and Better Composite Curing

- **Single or dual zone**
- **8.4" (213mm) touch-screen**
- **Dual vacuum system: Built-in electric vacuum pump and vacuum venturi for each zone**
- **Universal voltage: 100-130VAC, 200-240VAC**
- **30 amps output per heat zone**
- **10 thermocouple sensors per zone**
- **Accepts J-type thermocouples**
- **Includes everything you need**

Easy-To-Use Interface on a Full-Color HD Touch-Screen

- Quick 3-step programming: Stores
- Quick 3-step programming: Stores up to 30 programs on hot bonder
- Easy-to-follow menu entry: Uses simple drop-down menus and a familiar QWERTY keyboard interface
- Multi-task: Perform several
- Multi-task: Perform several operations at once
- Retains history of cure analysis: Data logging intervals 1 to 99 minutes
- Multiple language

- Secure: Multiple levels of password protection
- Upgradeable

support: English, German, Russian, Chinese (Mandarin)

Fast and Simple Data Transfer with USB Drive (USB Flash Disk Included)

- **Transfer and archive post cure data history to your PC.**
- **Instantaneously analyze your data on your spreadsheet and word processor programs including Microsoft ® Excel ® and Word ®**
- **Transfer your programs quickly from one bonder to another**
- **Update your hot bonder easily with the latest software version for FREE.**

ACR ® 3 Hot Bonder Brochure

Specifications

General

- **Single or dual zone**
- **8.4" (213mm) touch-screen with easy-to-use interface**
- **USB port for data transfer (USB flash disk included)**
- **Input ground fault interrupter breaker protected**
- **Audible and visual alarms for high and low temperature / vacuum limits**
- **Data logs digitally or through built-in printer : prints and records real-time status of cure including program parameters**

Power

- **Input Voltage: 100-130VAC, 200-240VAC**
- **MAINS supply voltage fluctuations up to ±10% of the nominal voltage**
- **Transient over voltages typically found on a Category II power source; i.e. a lighting**

a Category II power source: i.e. a lighting circuit
- Frequency: 50-60Hz
- 30 amps maximum per zone
- Output cord receptacle: NEMA L14-30R

Vacuum

- Dual vacuum system: Built-in electric vacuum pump and vacuum venturi for each zone
- Pressure: 28in Hg (13.8PSI)
- Ability to manually adjust pressure for each zone

Temperature Control

- Cure up to 1400 ^{o} F (760 ^{o} C)
- 10 thermocouple sensor inputs per zone
- Accepts J-type thermocouple connectors
- Accuracy: ±3°F (1.67°C)
- Monitors all thermocouples for alarms

Environment

- Intended for use in dry environments. Do not expose to spray.
- Altitude up to 6562ft (2000m)
- Storage temperature range: -4 to 140 ^{o} F (-20 to 60 ^{o} C)
- Operating temperature range: 41 to 104 ^{o} F (5 to 40 ^{o} C)
- Maximum relative humidity: 80% for temperatures up to 88 ^{o} F (31 ^{o} C) decreasing linearly to 50% relative to humidity at 104 ^{o} F (40 ^{o} C)
- Pollution degree 2 (normally only non-conductive pollution occurs, however a temporary conductivity caused by condensation must be expected)

Support

- ACR ® 3 Hot Bonder Demonstration and Training Video
- FREE Software Update
- Informational Brochure
- Technical Data Sheet
- Operating Instruction Manual (PN: 41039-03)

Ordering Information

The ACR ® 3 Hot Bonder can be purchased either with or without heaters.

ACR ® 3 Hot Bonder Kit

Number of Zones	Voltage	Part Number
1	Universal Voltage	ACR-3-S
2	Universal Voltage	ACR-3-D

ACR ® 3 Hot Bonder Kit includes

- ACR ® 3 hot bonder unit
- 10ft (3m) vacuum hoses (2 per zone)
- 10ft (3m) input power cord (1 per zone)
- 5ft (1.5m) heater output power cord (1 per zone)
- USB flash disk
- J-type thermocouples (10 per zone)
- Standard connector adapters for thermocouple receptacles (10 per zone)
- Vacuum bag feed-throughs (2 per zone)
- Extra printer ribbon and paper (1 per zone)
- DVD Training Video

ACR ® 3 Hot Bonder Kit with Heaters

Number of Zones	Voltage	Part Number	NSN*
1	120VAC	ACR-3-S120KIT	4920-01-538-9296
1	240VAC	ACR-3-S240KIT	4920-01-538-9296
2	120VAC	ACR-3-D120KIT	4920-01-545-5200
2	240VAC	ACR-3-D240KIT	4920-01-545-5200

***Please indicate voltage when ordering with NSN.**

ACR ® 3 Hot Bonder Kit with Heaters includes

- **ACR ® 3 hot bonder unit**
- **One 10" x 10" (254 x 254mm) SR composite heat curing blanket per zone**
- **One 12" x 12" (305 x 305mm) SR composite heat curing blanket per zone**
- **One 16" x 16" (406 x 406mm) SR composite heat curing blanket per zone**
- **10ft (3m) vacuum hoses (2 per zone)**
- **10ft (3m) input power cord (1 per zone)**
- **5ft (1.5m) heater output power cord (1 per zone)**
- **USB flash disk**
- **J-type thermocouples (10 per zone)**
- **Standard connector adapters for thermocouple receptacles (10 per zone)**
- **Vacuum bag feed-throughs (2 per zone)**
- **Extra printer ribbon and paper (1 per zone)**
- **DVD Training Video**

Contact us for a quotation and application assistance.

Interested in Wind Turbine Blade Field Repair? We have a complete kit available to solve this application

Click here for more information about the BriskHeat ACR 3 Wind Turbine Repair Kit.

You may also like

ACR 3 Hot Bonder Demonstration and Training Video

FREE ACR 3 Hot Bonder Software Update

NEW ACR MiniPRO Hot Bonder

NEW BRISKAIR Hot Air Gun Curing System

SR Silicone Rubber Composite Curing Heating Blankets

Radome Composite Curing Heating Blankets

VT Vacuum Curing and Debulking Table

TT Table Top Composite Curing Controller

Aircraft Infrared Non-Destructive Testing (NDT) Kits

Click Here to Receive a Quote or Additional Information.

BriskHeat Corporation - 1055 Gibbard Avenue - Columbus, Ohio 43201
Toll Free 1-800-848-7673 - Phone 614-294-3376 - Fax 614-294-3807
Email: bhtsales1@briskheat.com

© 2009 BriskHeat

Product Solutions
NEW Products
Value-Priced Bundles
NEW Etched Foil Heaters
Cloth Heating Jackets
Silicone Rubber Heating Blankets
XtremeFLEX® Heating Tapes
Insulators
Drum / Pail Heaters
IBC / Tote Tank Heaters
Gas Cylinder Warmers
Heating Cable
Snow Melting
Laboratory Mantle Heaters
Enclosure / Control Panel Heaters
Resistance Wire
Temperature Controllers
Hopper Heating Systems
Hazardous-Area Heaters and Controls
Hot Bonders and Composite Blankets
Aircraft Infrared NDT

Products → Composite Curing Solutions → NEW ACR MiniPRO Hot Bonder

SHARE

Products

BriskHeat®

NEW ACR MiniPRO Hot Bonder

Easiest-to-Use Hot Bonder Under 18 lbs (8 kg)

- **Fully-Loaded**
- **HD Color Touch Screen**
- **USB Data Port**

View larger image

E-mail this product to a friend

Product Highlights

Perform Composite Repairs Anywhere

- Small and lightweight: weighs less than 18 lbs (8 kg)
- Easy-to-carry and set-up: even up towers, ladders, staircases, and on wings

Easy-To-Use

Kits

Vacuum Curing / Debulking Tables

- Quick and intuitive touch screen menu navigation
- Easy 3-step programming
- Simple data transfer with USB drive
- Virtually no training required

Excellent Value: Fully-loaded and Upgradeable

- Eye-catching full-color HD touch screen
- Includes 10 J-type thermocouple sensors
- Full 20 amp capacity (30 amps optional)
- Program cures with up to three soaks
- Powerful vacuum venturi pump (requires compressed air)
- FREE software upgrades

Ideal for

- Aircraft repair
- Challenging field repair
- Wind turbine blade repair - even up-tower
- A wide variety of industries and uses: sporting goods, automotive, marine, recreational vehicles, racing and more

ACR MiniPRO Brochure

ACR MiniPRO Instructions (Part # 41039-05)

Product Specifications

General

- Single zone
- 8.4" (213mm) touch-screen with easy-to-use interface
- USB port for data transfer (USB flash disk included)
- Input ground fault interrupter breaker protected
- Audible and visual alarms for high and low temperature / vacuum limits
- Data logs digitally

Temperature Control

- Cure up to 1400°F (760°C)
- 10 J-type thermocouple sensor inputs
- Accuracy: ±3°F (1.67°C)
- Monitors all thermocouples for alarms
- Data logs digitally: records real-time status of cure including program parameters

Software

- Quick 3-step programming: Stores up to 30 programs on hot bonder
- Easy-to-follow menu
- Multi-task: Perform several operations at once
- Retains history of last 12 cures

- Easy-to-follow menu choices
- Program cures with up to three soaks
- Quick and easy data entry: Uses simple drop-down menus and a familiar QWERTY keyboard interface
- Secure: Multiple levels of password protection
- Upgradeable
- last 12 cures
- Customized post cure analysis: Data logging intervals 1 to 99 minutes
- Multiple language support: English, German, Russian, Chinese (Mandarin)

Power

- Input Voltage: 100-130VAC, 200-240VAC
- Input ground fault interrupter breaker protected
- MAINS supply voltage fluctuations up to ±10% of the nominal voltage
- Transient over voltages typically found on a Category II power source: i.e. a lighting circuit
- Frequency: 50-60Hz
- 20 amp capacity (30 amp optional)
- Output cord receptacle: NEMA L14-30R

Vacuum

- Vacuum venturi (requires compressed air)
- Pressure: Up to 28in Hg (13.8PSI)
- Ability to manually adjust pressure

Environment

- Intended for use in dry environments. Do not expose to spray.
- Altitude up to 6562ft (2000m)
- Storage temperature range: -4 to 140°F (-20 to 60°C)
- Operating temperature range: 41 to 104°F (5 to 40°C)
- Maximum relative humidity: 80% for temperatures up to 88°F (31°C) decreasing linearly to 50% relative to humidity at 104°F (40°C)
- Pollution degree 2 (normally only non-conductive pollution occurs, however a temporary conductivity caused by condensation must be expected)

Ordering Information

Contact us for a quotation and application assistance.

Part Number: **ACR-3-MINI**

Includes:

- One ACR MiniPRO hot bonder unit
- One 10ft (3m) vacuum hose
- One vacuum bag feed-through

- One vacuum bag feed-through
- One 10ft (3m) input power cord
- One 5ft (1.5m) heater output power cord
- One USB flash disk
- 10 J-type thermocouples
- 10 Standard connector adapters for thermocouple receptacles

You may also like

ACR 3 Hot Bonder

ACR 3 Hot Bonder Demonstration and Training Video

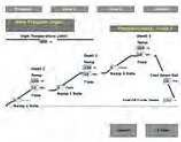

FREE ACR 3 Hot Bonder Software Update

NEW BRISKAIR Hot Air Gun Curing System

SR Silicone Rubber Composite Curing Heating Blankets

Radome Composite Curing Heating Blankets

VT Vacuum Curing and Debulking Table

TT Table Top Composite Curing Controller

Aircraft Infrared Non-Destructive Testing (NDT) Kits

Click Here to Receive a Quote or Additional Information.

BriskHeat Corporation 1055 Gibbard Avenue Columbus, Ohio 43201
Toll Free 1-800-848-7673 - Phone 614-294-3376 - Fax 614-294-3807
Email: bhtsales1@briskheat.com

© 2009 BriskHeat

APPLIED HEAT

Tollfree: 1-888-527-2923
Tel: 480-753-0044 Fax: 480-753-0045

practical. portable. durable. affordable.

REAL LIFE EQUIPMENT

Designed with the End User In Mind

Applied Heat is committed to providing affordable, operator-friendly equipment that makes it easy to get the job done right. No whistles and bells, just rugged, practical common-sense performance. Applied Heat offers a complete line of composite repair equipment. If we don't have what you're looking for, we'll do our best to help you locate it. At Applied Heat, we want to make your job easier. Give us a call.

Applied Heat offers:

Hot Bonders for all situations
PACS--Phosphoric Acid Anodizing Containment System
Heat Blankets in stock and custom sizes
Thermocouple Accessories and Supplies.

Home
Bonders
Composite Repairs
Metal Treatments

Composite Hot Bonder General Features

Composite Hot Bonder Controller using:

Standard National Instruments SCXI Data Acquisition
Standard PC Laptop Hardware and USB Interface
Microsoft 2000 or XP Computing Engine
Rich Lab View Graphical User Interface
Heat Blankets
Vacuum Located Heat Cells
Shop air or vacuum
System Integrity Watchdog
Three layer thermocouple feedback

ALC-HBS upgradeable model configurations:

P-8 - 8 Outputs, 8 zones, 16 Thermocouples
P-16 - 16 Outputs, 16 zones, 16 Thermocouples, 8 cells
P-24 - 24 Outputs, 16 zones, 32 Thermocouples, 24 cells
P-32 - 32 Outputs, 16 zones, 32 Thermocouples, 32 cells

Individually Controlled or Group Controlled Heat Zones
Easy programming
Stored programming
Digital Image recording in programs
Automatic uneditable html graph and report of cure events
Automatic editable Zimac data file for editable graphing and presentations

© 2012 Zimac Laboratories Inc., All Rights Reserved. Message to WebMasterPrivacy | User Agreement | Last Update : September 17 2012

Home
Bonders
Composite Repairs
Metal Treatments

Bonders :: Composite Hot Bonder

Portable Modular Composite Hot Bonder

Modular Hot Bonder

Provides optimum uniform heating using the Zimac hot bonding process. The system uses multi-zone control with the convenience of self attaching cells, blankets and conductive 2D and 3D geometry caul plates.

For Composite Hot Bonder Repairs and Doubler Repairs....

For Out-of Autoclave and Out of Oven Manufacture using Integral Heat....

For In-Autoclave precisely located responsive heat...

For composite cure of Glass, Kevlar, and Carbon, Epoxy systems....

For in-situ heat treatments such as retrogression aging of aluminum....

Use the Zimac Composite hot bonder.

© 2012 Zimac Laboratories Inc.. All Rights Reserved. Message to WebMasterPrivacy | User Agreement | Last Update : September 17 2012

Products
- Product Information
- Standard Hardware
- Consumable Materials
- Raw Materials
- Metals & Seat Track Range
- Vendor Parts
- Lamps and Bulbs
- Cable and Wire
- Composites
- Hot Bonder
- Lifting Device
- Electronic Components
- New Products
- Supplier Network
- Supplier Line Card
- REACH
- Search Parts

Repair of Composite and Metal Structures

The increasing use of composites in aircraft manufacturing also is giving rise to the need for repair and manufacturing tools.
Interturbine Aviation Logistics GmbH and GMI AERO answer this need with the ANITA bonding consoles as well as a complete line of accessories, e.g. curing heating blankets, thermocouples, thermocouple welders, temperature calibrators for ANITA consoles, printer paper rolls and ink cartridges, a.o.

The know-how and experience of more than 20 years in composite repair of GMI and the international distributor network of Interturbine Aviation Logistics offer customers excellent service and product support all over the world.

- The ANITA EZ09
- Main Functions of ANITA EZ09
- Technical Specifications
- Heating Blankets and Accessories
- Training and Support

© Interturbine Aviation Logistics GmbH

https://docs.google.com/viewer?a=v&q=cache:jfjqOGzY_C0J:nal-ir.nal.res.in/9826/1/Advanced_hot_bonding_system_for_aerospace_structures.pdf+%22hot+bonder%22+patented&hl=en&gl=us&pid=bl&srcid=ADGEEShjX4PswNstZsawwpstVwg3Eif81kDEmOmyTDENPZnmIhppFVbr_q_XKnG3UZj0Y_06Jx46PUH5u4vsbnKFYgn_6dJXm83zbWOi0n6aUNxyCJ3JMrXvOSTVStzMv_kEzHdPK10D&sig=AHIEtbSqVzzpcxgEYrl

Search Images Maps Play YouTube News Gmail Documents More Sign in

Advanced Hot Bonding System For Repair Of Aerospace Structures

File View Help

1 of 3 patent

Analog Converter) card and a phase-angle fired SCR module are required respectively. These devices have been eliminated through a cycle time control program. It converts the linear control output into a pulse width modulated digital signal. This approach requires only a digital output device and a Solid-State Relay (SSR) for every heater. Based on the demand heaters are switched in steps of 0.5second interval. For example, if the heat demand is 50% then for half of the scan interval heaters will be ON. The ON and OFF pulses are properly interleaved to achieve smooth change in temperature. The software repeats set point calculation, PV calculation, PID algorithm and cycle time control loop for every five seconds.

Fig. 3: Photograph Of The Multi-Zone Hot Bonding System

4.0 TESTS AND RESULTS

4.1 Thermal Survey On A Composites Fin Tip

An aircraft fin tip was considered as a typical composites specimen for thermal survey. This part is made of glass fibre reinforced plastics. The repair area chosen is partly on a rib. A defect of size 80 mm diameter and a heater size of 200mm x 200mm was considered. One thermocouple was placed in the centre for controlling and four were placed on the edges for monitoring. All the sensors were located well within the heater area of 200mm x200mm. Vacuum bagging and air evacuation was carried out with out prepreg. The cure cycle chosen consists of heating at a rate of 8°C/min. from ambient temperature to 120°C, holding at 120°C for 24 minutes, heating at a rate of 8°C/min from 120°C to 176°C, holding at 176°C for 24 minutes, cooling at a rate of 8°C/min from 176°C to 100°C and finally holding it at 100°C for 24 minutes. Throughout the cure a constant vacuum of less than 40 torr was maintained. The temperature data plot of the control sensor, leading and lagging sensors are shown in Fig.4. It is found that a temperature gradient of about 12°C exists between the leading sensor

EXHIBIT 2

bonders
blankets
PACS
Thermocouple
Home
Contact us

Tollfree: 1-888-527-2923
Tel: 480-753-0044 Fax: 480-753-0045

LINK-BONDER Single Zone Hot Bonder with Dual Zone Capabilities

MODEL A-150B-LB-HL Specifications	
SIZE	11" X 13" X 8"
WEIGHT	14 LBS.
POWER	120 VAC 50/60 Hz./240 VAC 50/60 VAC
MAX CURRENT	30 AMPS AT 120 VAC
ENVIVONMENT	Operating: 32 F to 120 F Storage: 0 to 160
HUMIDITY	95% Noncondensing
ALARM	Adjustable louver type
DISPLAY	4 x 20 character Super twist, back lit
PRINTER	High Speed Thermal
TC INPUTS	J type, 12 each
CONTROL TC	Manual or automatic selection
PROGRAMMING	Display prompted. Stores 10 cure profiles
ACCURACY	+/- 2 F
RESOLUTION	1 F
TEMP RANGE	32 to 770 F

Two A-150B-LB Bonders can be linked via a communications cable to create a fully functional Dual Zone Hot Bonder

PRINTER OUTPUTS
DATE
TIME
ACTIVE TC'S
CONTROL TC
OPERATOR ID
PROFILE NUMBER
PROFILE COMPLETE
WARNING ALERTS

ALARMS
OVER TEMP
UNDER TEMP
HIGH LIMIT
OPEN TC
POWER INTERRUPT
VACUUM LEVEL

All connections enter on left side of case & exit on right side.

ALARM DATA
BLANKET OPEN

top | bonders | home

In re Heatcon, Inc., No. 85/281,225 - Applicant's Exhibit 2 - Page 2 of 8

bonders
blankets
PACS
thermocouple
home
contact us

Tollfree: 1-888-527-2923
Tel: 480-753-0044 Fax: 480-753-0045

Single Zone Hazardous Location Bonder

A-150B-LB-HL Specifications	
SIZE	11" X 13" X 8"
WEIGHT	22 LBS.
POWER	120 VAC 50/60 Hz
MAX CURRENT	30 AMPS AT 120 VAC
ENVIVONMENT	Operating: 32 F to 120 F Storage: 0 to 160
HUMIDITY	95% Noncondensing
ALARM	Adjustable louver type
DISPLAY	4 x 20 character Super twist, back lit
PRINTER	Impact, dot matrix, plain paper
TC INPUTS	J type, 12 each
CONTROL TC	Manual or automatic selection
PROGRAMMING	Display prompted. Stores 10 cure profiles
ACCURACY	+/- 2 F
RESOLUTION	1 F
TEMP RANGE	32 to 770 F

Meets Class 1, Division 2 Requirements per National Electrical Code for operation in hazardous locations.

PRINTER OUTPUTS
DATE
TIME
ACTIVE TC'S
CONTROL TC
OPERATOR ID
PROFILE NUMBER
PROFILE COMPLETE
WARNING ALERTS
ALARM DATA
BLANKET OPEN

ALARMS
OVER TEMP
UNDER TEMP
HIGH LIMIT
OPEN TC
POWER INTERRUPT
VACUUM LEVEL

top | bonders | home

WichiTech Industries, Inc.
1120 North Charles Street,Suite 103, Baltimore, MD 21201
Toll Free: 1.800.776.4277 • **Phone:**410.244.1966 • **Fax:**410.244.1968
Email: wichitech@wichitech.com • **Web site:**www.wichitech.com

HB-1 Composite Repair System

You'll get big performance from the industry's smallest, most powerful and economical hot bonder for curing composite repairs. This handheld unit performs well from the workbench to the tightest, spots, the highest places.
The HB-1 is a full featured bonder. The HB-1 can be seamlessly networked, enabling the interconnection of multiple HB-1's to support extra large or very complex repairs.

Compact and durable, the 3.5 pound HB-1 repair system has all of the features of much larger and more expensive units: four active thermocouple inputs, audible alarm and safety devices and the ease of programming that is a signature of WichiTech bonders. Set to go with its own standard vacuum line and heating blanket, all it needs is a vacuum source or shop air with venturi to do the biggest or smallest jobs quickly and efficiently.

Results 1 - 4 of 4

P/N	Description	NSN	Size
F4HB1000	HB-1 Composite Repair System with 4 Thermocouple Inputs	4920-01-445-4360	3.6" x 4.7" x 9.5"
F4HB1001	HB-1 Composite Repair System with 8 Thermocouple Inputs	N/A	3.6" x 4.7" x 9.5"
F4HB1002	HB-1 Composite Repair System with 10 Thermocouple Inputs	N/A	3.6" x 4.7" x 9.5"
F4HB1003	HB-1 Explosion Proof Composite Repair System with 4 Thermocouple Inputs	4920-01-445-4519	3.6" x 4.7" x 9.5"

Results 1 - 4 of 4

WichiTech Industries, Inc.
1120 North Charles Street,Suite 103, Baltimore, MD 21201
Toll Free: 1.800.776.4277 • **Phone:**410.244.1966 • **Fax:**410.244.1968
Email: wichitech@wichitech.com • **Web site:**www.wichitech.com

HB-2 Composite Repair System

The world's hottest hot bonder, the WichiTech HB-2 is a powerful, portable composite repair system that sets industry standards for ease of operation, safety, reliability and value. This durable system repairs metal, Kevlar, carbon, boron and fiberglass simply, safely and cost-effectively. HB-2 makes fast, flawless work of large or small repair jobs. The 35 pound USA-built unit is as simple to program as a microwave with its easy-to-read digital display and menu listed functions.

The custom made HB-2 is individually manufactured to your specifications. Select from a single zone unit up to a dual zone unit with two independent programmed heating zones, 20 amps each, and two individual adjustable vacuum zones or anywhere in between.

These twin features permit you to perform two independently-programmed cures simultaneously. Fail-safe protection is provided by the monitoring of multiple thermocouples, and audible alarms guard against temperature and vacuum conditions that could ruin the repair. Rugged field proven components shock mounted inside a tough, impact-resistant case mean years of reliable service from the HB-2 value engineered for first-time, every-time top of the line performance.

Results 1 - 4 of 4

P/N	Description	NSN	Size
F4HB2005	HB-2 Dual Zone Composite Repair System	4920-01-445-4529	21" x 14" x 8"
F4HB2007	HB-2 Single Zone Composite Repair System	N/A	21" x 14" x 8"
F4HB2005E	HB-2 Dual Zone Explosion Proof Composite Repair System	4920-01-553-8724RN	21" x 14" x 8"
F4HB2007E	HB-2 Single Zone Explosion Proof Composite Repair System	4920-01-556-7883RN	21" x 14" x 8"

Results 1 - 4 of 4