To: UDOR U.S.A., INC. (trademark@alteralaw.com)

Subject: TRADEMARK APPLICATION NO. 78867933 - 1325.8-US-01

Sent: 1/14/2008 6:15:26 PM

Sent As: ECOM114@USPTO.GOV

Attachments: Attachment - 1
Attachment - 2
Attachment - 3
Attachment - 4
Attachment - 5
Attachment - 6
Attachment - 7
Attachment - 8
Attachment - 9
Attachment - 10
Attachment - 11
Attachment - 12

UNITED STATES PATENT AND TRADEMARK OFFICE

SERIAL NO: 78/867933

MARK:

CORRESPONDENT ADDRESS:
MICHAEL B. LASKY
ALTERA LAW GROUP LLC
6500 CITY WEST PKWY STE 100
EDEN PRAIRIE, MN 55344-7704

GENERAL TRADEMARK INFORMATION:
http://www.uspto.gov/main/trademarks.htm

APPLICANT: UDOR U.S.A., INC.

CORRESPONDENT'S REFERENCE/DOCKET NO:
1325.8-US-01
CORRESPONDENT E-MAIL ADDRESS:
trademark@alteralaw.com

REQUEST FOR RECONSIDERATION DENIED

ISSUE/MAILING DATE: 1/14/2008

Applicant is requesting reconsideration of a final refusal issued June 19, 2007.

The drawing amendment contained in the Request for Consideration dated December 19, 2007, wherein the orifice has been disclaimed as a feature of the mark is hereby accepted. In addition, the requirement for a substitute specimen is hereby withdrawn due to the substitute specimens submitted with the Request for Consideration dated December 19, 2007.

However, after careful consideration of the law and facts of the case, the examining attorney must deny the request for reconsideration as to the each refusal under Trademark Act Section 2(e)(5), and adhere to the final action as written since no new facts or reasons have been presented that are significant and compelling with regard to the points at issue.

Accordingly, applicant's request for reconsideration is *denied* as to each refusal under Trademark Act Section 2(e)(5), and the attached evidence in support of the refusals is hereby added to the evidence currently of record. The time for appeal runs from the date the final action was issued. 37 C.F.R. Section 2.64(b); TMEP Section 715.03(c). If applicant has already filed a timely notice of appeal, the application will be forwarded to the Trademark Trial and Appeal Board (TTAB).

/ses/
Shaila E. Settles
Trademark Examining Attorney
Law Office 114
(571) 270-1527 (t)
(571) 270-2527 (f)
shaila.settles@uspto.gov

STATUS CHECK: Check the status of the application at least once every six months from the initial filing date using the USPTO Trademark Applications and Registrations Retrieval (TARR) online system at http://tarr.uspto.gov. When conducting an online status check, print and maintain a copy of the complete TARR screen. If the status of your application has not changed for more than six months, please contact the assigned examining attorney.

United States Patent and Trademark Office

Home Site Index Search FAQ Glossary Guides Contacts eBusiness eBiz alerts News Help

Full Text
Help

Go to Page:
Go

Sections:
- Front Page
- Drawings
- Specifications
- Claims

United States Patent Office

Re. 24,353
Reissued Sept. 3, 1957

24,353

SPRAY NOZZLE

Orlando W. Kromer, Minneapolis, Minn.

Original No. 2,714,531, dated August 2, 1955, Serial No. 341,443, June 15, 1953. Application for reissue October 29, 1956, Serial No. 641,373

13 Claims. (Cl. 299—121)

Matter enclosed in heavy brackets [ ] appears in the original patent but forms no part of this reissue specification; matter printed in italics indicates the additions made by reissue.

My invention relates to spraying nozzles and has for its primary objective the provision of a nozzle which will throw a substantially uniform spray in a flat shape pattern of fixed and superimposed width.

A still further object of my invention is the provision of a spray nozzle which is more efficient than any single spray nozzle or combination of spray nozzles heretofore produced, which cannot get out of adjustment, and which, by virtue of its having a single large opening, cannot become clogged.

A still further object of my invention is the provision of a device of the class above described which is extremely light in weight, which has a minimum of parts, and which is extremely inexpensive to produce.

A still further object of my invention is the provision of a spray nozzle which is rugged in construction and which will maintain its accuracy for a longer period of time.

The above and still further objects of my invention will become apparent from the following detailed specification, appended claims, and attached drawings.

Referring to the drawings, wherein like characters indicate like parts throughout the several views:

Fig. 1 is a view in rear elevation of my novel sprayer in use;

Fig. 2 is an enlarged view in side elevation;

Fig. 3 is a view in rear elevation on the same scale as Fig. 2;

Fig. 4 is a view partly in section and partly in end elevation as seen from the line 4—4 of Fig. 2; and

Fig. 5 is a fragmentary view in bottom elevation as seen from the line 5—5 of Fig. 2.

Referring with greater particularity to the drawings, the numeral 1 indicates in its entirety a main body or head having therein an axial bore 2, to the rear end portion of which a fluid conduit or pipe 3 is adapted to be received. The reduced forward end 4 of the bore 2 provides a forwardly opening jet-producing outlet. Body 1, as shown, is preferably formed from brass, cast iron, or steel bar stock, and has a forwardly extended neck 5 at its upper portion. As shown particularly by Figs. 3 and 4, the neck 5 extends radially outwardly from the bore opening 4 and is of less than 180 degrees in circumferential extent. For a purpose which will hereinafter become apparent, the neck 5 has arcuate converging undersurfaces 6 which intersect the upper end portion of the bore 4 on opposite sides of and in spaced relation to a line drawn vertically therethrough.

A circular sprender or impact plate 7 is detachably secured to the forward surface 8 of the neck 5 by means of headed bolts 9, and is generally concentrically disposed with respect to the bore 4. The sprender surface 10 of the sprender plate 7 is smooth and preferably polished. Furthermore, this surface 10 is at right angles to the axis of the bore 4 whereby to produce a downwardly and laterally outwardly opening spray passage 11, the upper extent of which is defined by the arcuate undersurfaces 6 of the neck

5, and hence said passage 11 has a circumferential extent greater than 180 degrees but less than 360 degrees.

In order that a spray of uniform density from end to end may be created, I provide a lip 12 which projects forwardly from the body 1 into the spray passage 11. As shown, the lip 12 has a surface 13 which slopes forwardly and downwardly from the undersurfaces 6 of the neck 5 toward the sprender plate 7. In practice, I have found that most efficient results are achieved by sloping of the surface 13 at a range of angles from between 10 and 14 degrees, specifically at 13 degrees with respect to the plane of the adjacent surface 10 of the sprender plate 7. As shown, the bore 4 opens through the surface 13, the surface 13 terminating in a point 14 below the bore 4 and in closely spaced relation to the sprender plate 7. The entire area of the surface 13 above the bottom 15 of the bore 4 is in the same plane. However, the pointed lower end portion of said lip 12 below the bore 4 is substantially parallel to the surface 10 of the sprender plate 7, as indicated at 16. Note also that the undersurface 17 of the lip 12 converges in straight lines defining a segment of less than 180 degrees.

In operation, fluid under pressure entering the main body 1 through the pipe 3 is urged in a jet through the bore 4. The jet of fluid is forced against the smooth surface 10 of the impact or sprender plate 7 with considerable force. The fluid tends to be spread uniformly in all directions. However, the neck 5 and particularly the arcuate undersurfaces 6 create the upper limits of the fan-shape spray pattern X, illustrated in Fig. 1. Note particularly, by reference to Figs. 2 and 5, that the upwardly and rearwardly sloping surface 13 of the lip 12 creates a space between the lip 12 and the surface 10 of the sprender plate 7 which increases in width progressively from the parallel surface 16 thereof to the undersurfaces 6 of the neck 5. By this means, the least amount of the spray-producing fluid, entering the bore 1 from the conduit 3, is allowed to pass between the closely spaced substantially parallel surfaces 16 and 16 to the area of the ground immediately therebelow; and an increasingly greater amount of fluid is allowed to the lateral distance from the bore 1 increases on opposite sides. Note that the outermost limits of the spray X, identified by the numeral 18 in Fig. 1, is formed by the widest area between the surfaces 10 and 13, namely the junctures of the surface 13 with the undersurfaces 6. Note also, as shown in Fig. 2, that the arcuate undersurfaces 6 likewise extend angularly upwardly in the direction of the sprender plate 7 for increased efficiency.

My invention has been thoroughly tested and found to be completely satisfactory for the accomplishment of the above objects, and while I have disclosed a preferred embodiment thereof, I wish it to be understood that same is capable of modification without departure from the scope of the appended claims.

What I claim is:

1. A spray nozzle comprising a main body having a longitudinally extended jet producing bore therethrough, a sprender plate carried by one end of said body, spacer means arranging said bore opening said sprender plate from said one end of said body and substantially normal to said bore, said spacer means being of less than 180 degrees in circumferential extent and having converging undersurfaces which intersect said bore, said body, spacer means and sprender plate defining an outwardly opening passage of more than 180 degrees of circumferential extent underlying said bore, a lip on said body intermediate said sprender plate and said one end of the body, said lip having a flat forward surface sloping outwardly from the spacer means toward the sprender plate and terminating below the bore in closely spaced relation to said sprender plate, with said bore opening through said lip,

United States Patent and Trademark Office

Home Site Index Search FAQ Glossary Guides Contacts eBusiness eBizalerts News Help

Full Text
Help

Go to Page:
Go

Sections:
- Front Page
- Drawings
- Specifications
- Claims

2. The structure defined in claim 1 in which the sprender plate is provided with a smooth flat surface and in which said lip underlying said bore is provided with a flat surface portion which is substantially parallel to the smooth surface of said sprender plate.

3. The structure defined in claim 1 in which the forward surface of said lip lies at an angle of from 10 to 16 degrees from the adjacent surface of the sprender plate.

4. The structure defined in claim 1 in which the undersurfaces of said spray nozzle are arcuate and intersect said bore on opposite sides and in spaced relation to the vertical diameter of the bore.

5. The structure defined in claim 4 in which the sprender plate is provided with a smooth flat surface and in which said lip underlying said bore is provided with a flat surface portion which is substantially parallel to the smooth surface of said sprender plate.

6. The structure defined in claim 5 in which said lip is provided with undersurfaces which converge in straight lines defining a segment of less than 180 degrees.

7. A spray nozzle comprising a main body having a longitudinally extended jet-producing bore therethrough, a sprender plate carried by one end of said body at right angles to said bore, a spacer means axially spacing said sprender plate from the main body, said spacer means having spray passage flanking surfaces intersecting said bore; said body, spacer means and sprender plate defining a radially outwardly opening segmental spray passage, a lip defined by said body, said lip being disposed within said spray passage and extending from said bore generally radially outwardly, said lip having a flat forward surface which slopes axially toward the sprender plate and terminates at its lower end portion adjacent the bore in closely spaced relation to said sprender plate.

8. A spray nozzle comprising a main body element having a longitudinally extended jet-producing bore therethrough, a detachable sprender plate element carried by said body element at right angles to said bore, a spacer means overlying said bore spacing said sprender plate element axially from said body element, said spacer means being of less than one-half of the peripheral extent of said body element and having converging undersurfaces which intersect the projected cross-sectional area of said bore; said body element, spacer means and sprender plate element defining an outwardly opening spray passage of more than 180 degrees in circumferential extent underlying said bore, a lip on one of said elements, said lip having a flat surface sloping from the spacer means toward the other of said elements and terminating below the bore in closely spaced relation to the other of said elements.

9. The structure defined in claim 8 in which one of said elements is provided with a smooth flat surface and in which the surface of said lip facing said flat surface

lies at an angle of from 10 degrees to 16 degrees with respect thereto.

10. The structure defined in claim 8 in which one of said elements is provided with a smooth flat surface and in which said lip underlying said bore is provided with an angular surface portion which is substantially parallel to the smooth surface of the other of said elements.

11. The structure defined in claim 10 in which said lip is provided with undersurfaces which converge to define a segment of less than 180 degrees.

12. A spray nozzle comprising a main body element having a longitudinally extended jet-producing bore therethrough, a sprender plate element carried by said body element, spacer means overlying said bore spacing said sprender plate element axially from said body element in intersecting relation to a projection of said bore, said spacer means having converging undersurfaces which intersect a projection of said bore; said body element, spacer means and sprender plate element defining a segmental spray passage, a lip on one of said elements, said lip having a flat surface extending from the spacer means axially toward the other of said elements and terminating beyond a projection of said bore in closely spaced relation to the other of said elements.

13. A spray nozzle comprising a main body element having a longitudinally extended jet-producing bore therethrough, a sprender element carried by said body element, spacer means overlying said bore spacing said sprender element axially from said body element in intersecting relation to a projection of said bore, said spacer means having undersurfaces which converge downwardly toward said bore, one of said elements having a flat surface which is normal to the axis of the bore, and the other of said elements having a flat surface which slopes from said spacer means toward said normal surface and terminates in closely spaced relation thereto below the bore, said spacer means being formed integrally with the body element, and said normal surface being on said sprender element.

References Cited in the file of this patent
or the original patent

UNITED STATES PATENTS

949,520	Choate	Feb. 15, 1910
978,835	Bowers	Dec. 20, 1910
1,439,177	Loepinger	Dec. 19, 1922
1,639,162	Brooks	Aug. 16, 1927
2,338,273	Wilkins	Jan. 4, 1944

FOREIGN PATENTS

843,728	Germany	July 10, 1952

United States Patent and Trademark Office
Home Site Index Search FAQ Glossary Guides Contacts eBusiness eBiz alerts News Help

Full Text
Help

Go to Page:
Go

Sections:
Front Page
Drawings
Specifications
Claims

Sept. 3, 1957 O. W. KROMER Re. 24,353

SPRAY NOZZLE

Original Filed June 15, 1953

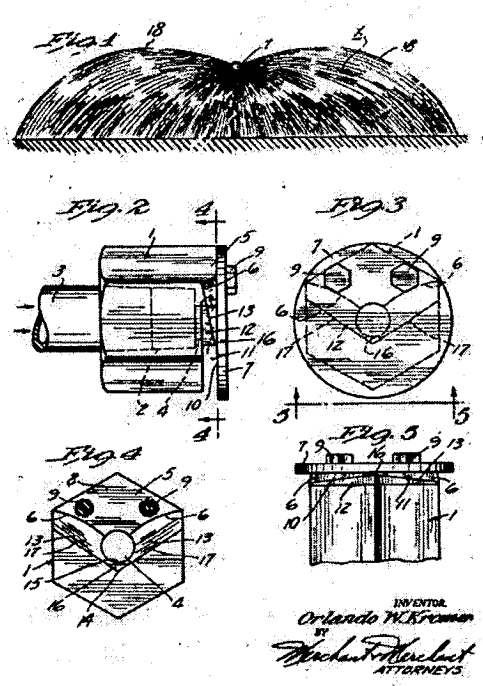

INVENTOR
Orlando W. Kromer
BY
Merchant & Merchant
ATTORNEYS

United States Patent and Trademark Office

Home Site Index Search FAQ Glossary Guides Contacts eBusiness eBiz alerts News Help

Full Text
Help

Go to Page:
Go

Sections:
- Front Page
- Drawings
- Specifications
- Claims

United States Patent [19]

Christopher

[11] **4,221,334**

[45] **Sep. 9, 1980**

[54] **ADJUSTABLE NOZZLE FOR CROP SPRAYING**

[76] Inventor: Gilman O. Christopher, 924 W. 11th Pl., Mesa, Ariz. 85201

[21] Appl. No.: 31,891

[22] Filed: Apr. 18, 1979

[51] Int. Cl.[2] A62C 31/02

[52] U.S. Cl. 239/304; 239/112; 239/171; 239/523

[58] Field of Search 239/394, 390, 171, 571, 239/523, 112, 106, 520

[56] **References Cited**

U.S. PATENT DOCUMENTS

1,764,576 6/1930 Lehman ..... 239/523 X
2,588,093 10/1945 Smith 239/304
3,179,341 4/1965 Pine et al. ..... 239/112 X
3,504,135 4/1971 Smith 239/304

Primary Examiner—Robert B. Reeves
Assistant Examiner—Gene A. Church
Attorney, Agent, or Firm—H. Gordon Shields

[57] **ABSTRACT**

Nozzle apparatus includes a head having a plurality of holes for sequential alignment with a delivery port and a cleanout hole also sequentially aligned with a delivery port, and a curved surface extends about the head for producing a fan-shaped spray when a hole is aligned with the delivery port and a fluid is pumped through the delivery port.

10 Claims, 6 Drawing Figures

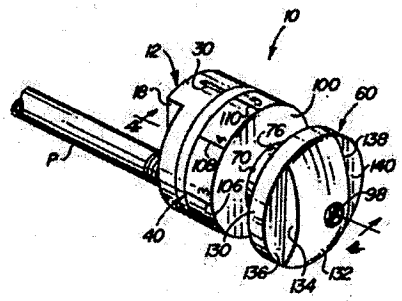

United States Patent and Trademark Office
Home Site Index Search FAQ Glossary Guides Contacts eBusiness eBiz alerts News Help

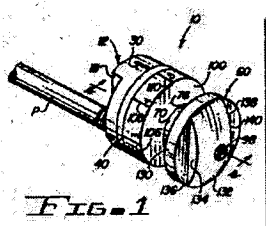

FIG. 1

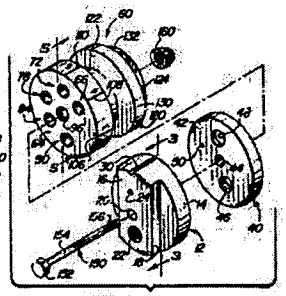

FIG. 2

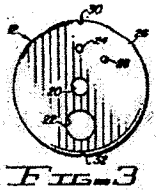

FIG. 3

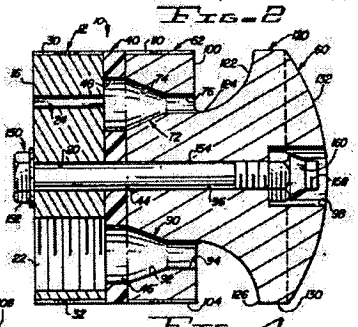

FIG. 4

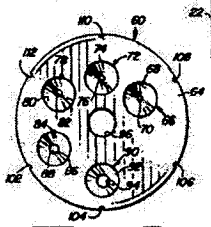

FIG. 5

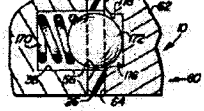

FIG. 6

United States Patent and Trademark Office

Home Site Index Search FAQ Glossary Guides Contacts eBusiness eBiz alerts News Help

Full Text
Help

Go to Page:
Go

Sections:
Front Page
Drawings
Specification
Claims

ADJUSTABLE NOZZLE FOR CROP SPRAYING

BACKGROUND OF THE INVENTION

1. Field of the Invention

This invention relates to spray heads and, more particularly, to spray heads for providing a fan-shaped spray from any one of a plurality of different sized holes.

2. Description of the Prior Art

For the aerial spraying of crops, the prior art spray nozzles all deliver a swirling pattern of the spraying fluid. The swirling, conical spray pattern extends downwardly from each nozzle, and a plurality of nozzles are generally aligned in a spaced apart relationship so that the swirling spray eventually overlaps to form some type of curtain. The overlapping sprays theoretically form into a curtain type configuration prior to the spray contacting the plants being sprayed. A typical nozzle of the prior art is shown in U.S. Pat. No. 3,996,835.

Another type of nozzle which also provides a conical, swirling type spray is disclosed in U.S. Pat. No. 2,288,093. The nozzles of both U.S. Pat. No. 3,996,835 and U.S. Pat. No. 2,288,093 include a plurality of holes or apertures, each of a different size, for producing different flow rates.

One of the problems with the prior art, swirling or conical type spray pattern, is that several feet are required before the zones of spray actually meet and blend into a solid, even sheet of spray. If the aircraft is not the absolutely correct height above the crops, then the spray pattern will not be relatively solid and an even spraying of the entire crop will not be accomplished.

One solution to the problem of providing a relatively solid, overlapping curtain of spray within a short distance after the spray liquid leaves the aircraft nozzles is to provide a fan-shaped spray pattern. It is known and understood that if a flow or stream of liquid is directed against a curved surface, a single curtain or fan-shaped spray of the liquid will result. Different apparatus have been developed in the prior art to provide a relatively flat spray, such as shown by U.S. Pat. No. 3,126,430. The apparatus of U.S. Pat. No. 3,126,430 is not, of course, directly related to an aircraft crop spraying system, but it does disclose a diffusing face adjacent an orifice through which a stream of liquid (water) flows. Another such apparatus which discloses a relatively flat, fan-shaped type of spray is shown in U.S. Pat. No. 1,268,122 and also in U.S. Pat. No. 580,351. However, none of the above-described patents relate to, or could be used, for aerial crop spraying. Moreover, none of the apparatus disclose the interchangeability of holes to provide a varied spray, depending on the size of the hole or orifice lined up with the stream of material to be sprayed.

The apparatus of the present invention provides both a curved surface for providing a fan-shaped spray of material, and a variable spray head having various sized orifices, each of which may be selectively aligned with a single port through which the stream of liquid flows for spraying onto a crop.

SUMMARY OF THE INVENTION

The crop spraying nozzle apparatus disclosed and claimed herein includes a continuously curved surface having a plurality of holes aligned with the curved surface for producing a fan-shaped spray of fluid or liquid from any one of a plurality of orifices or holes of different sizes, any of which is individually selectable for varying the quantity of liquid to be sprayed.

Among the objects of the present invention are the following:

To provide new and useful aerial spray apparatus;

to provide new and useful nozzle apparatus for spraying crops;

To provide new and useful spray nozzle apparatus for producing a fan-shaped spray of liquid;

To provide new and useful spray nozzle apparatus having a plurality of delivery orifices for providing variable amounts of liquid to be sprayed; and

To provide new and useful spray apparatus having a continuously curved surface against which a stream of liquid flows for providing a fan-shaped spray of the fluid.

BRIEF DESCRIPTION OF THE DRAWING

FIG. 1 is a perspective view of the apparatus of the present invention.

FIG. 2 is an exploded perspective view of the apparatus of FIG. 1 illustrating the various elements which comprise the apparatus.

FIG. 3 is a view in partial section of a portion of the apparatus of FIG. 2 taken generally along line 3—3 of FIG. 2.

FIG. 4 is a view in partial section of the assembled nozzle apparatus of FIG. 1.

FIG. 5 is an end view of the spray head used in the present invention, taken generally along line 5—5 of FIG. 2.

FIG. 6 is an enlarged view in partial section of a portion of the apparatus of the present invention, illustrating an alignment and locking detent and associated elements.

DESCRIPTION OF THE PREFERRED EMBODIMENT

FIG. 1 comprises a perspective view of nozzle apparatus 10 of the present invention. The nozzle 10 is shown connected to a pipe or conduit P through which liquid flows through the nozzle apparatus 10. The conduit or pipe P is in turn connected through a shutoff valve to a tank (not shown) which contains the liquid to be sprayed onto crops. Typically, there are a plurality of pipes or conduits P extending from a single manifold which is in turn connected by a valve to the spray tank. An aircraft will generally have a single manifold under each wing, and each manifold will have a plurality of conduits or pipes, such as shown in FIG. 1 and indicated by the letter P, extending from the manifold. Each pipe or conduit terminates in a spray head or nozzle, such as the apparatus 10 of the present invention. When the pilot activates his control valve, fluid flows from the tank through the manifolds, and from the manifolds into the pipes and through the spray heads or nozzles for delivery to the crop being sprayed.

The nozzle apparatus 10 includes three primary components or portions. The components are shown spaced apart from each other in an exploded view comprising FIG. 2. The three primary components or portions include a base 12, a gasket 40, and a spray head 60. FIG. 4, which is a view in partial section of the spray nozzle apparatus 10 of FIG. 1, comprises an assembled view of the spray nozzle apparatus 10, illustrating the various

United States Patent and Trademark Office

Home Site Index Search FAQ Glossary Guides Contacts eBusiness eBiz alerts News Help

Full Text
Help

Go to Page:
Go

Sections:
- Front Page
- Drawings
- Specifications
- Claims

components and their working relationships with respect to each other.

The base 12 includes a generally cylindrical portion 14, which includes a pair of parallel faces, such as rear face 16, but shown in FIG. 2, and front face 18, best shown in FIG. 3. FIG. 3 is an end view of the base 12 taken generally along line 3—3 of FIG. 2.

A pair of notches or flats 15 are cut into the cylindrical portion 14 and inwardly from the rear face 16 to provide surfaces on which tools may be secured for threading the base 12 onto the delivery pipe P. The flats 15 accordingly are spaced apart a predetermined distance, in keeping with a prior determination as to the size of wrench, or other tool, to be used to secure the base 12, with the rest of the spray nozzle components secured thereto, to the delivery pipe or conduit P.

Extending axially through the cylindrical portion 14 of the base 12 is a central bore 20. As best shown in FIG. 4, the central bore receives a bolt 150 which secures the three portions of the spray nozzle apparatus 10 together. Extending also axially through the cylindrical portion 14 is a threaded bore or port 22. The threaded bore or port 22 is spaced apart from the central bore 20, and is substantially parallel thereto. The bore 22 is threaded internally to receive the external threads of the pipe P, which is secured thereon.

A third bore or aperture 24 extends also axially through the cylindrical portion 14 of the base 12. The bore or aperture 24 comprises a clearance hole, and it is aligned with outlet ports on the head 60, as discussed below, for clearance purposes. The three bores 20, 22, and 24 are generally parallel to each other, but only the central bore 20 is centrally aligned with respect to the base 12. Each of the three bores 20, 22, and 24 are of different diameters, as is clearly shown in FIG. 3.

FIG. 3, which is an end view of the base 12, showing the front face 26 of the base, also shows a pin 28 extending outwardly from the front face 26. The pin 28 is used to index the gasket 40 to the base 12, and to prevent the gasket from turning when the head 60 is turned to align the port 22 with a desired discharge port of the appropriate size, as discussed below.

For aiding in aligning the discharge ports or discharge nozzles on the head 60 with the base 12, a pair of index notches are used. As shown in FIGS. 1, 2, 3, and 4, a notch 30 extends axially along the top of the cylindrical portion 14 of the base 12. A notch 32 extends axially along the outer periphery of the cylindrical portion 14 of the base 12, diametrically opposite the base 12, from the notch 30. This is best shown in FIGS. 3 and 4.

The gasket 40 is of a generally cylindrical configuration having a rear face 42, shown in FIG. 3, and a substantially parallel front face, not shown. The faces are spaced apart a relatively short distance, the length of which is the appropriate distance needed to allow the gasket 40 to effectively seal the base 12 and the head 60 to prevent leaks therebetween as the spray head 10 is used. Preferably, the gasket 40 is made of appropriate, relatively low cost material, such as polytetrafluoroethylene, marketed commonly under the trademark of "Teflon" by DuPont. The gasket includes three apertures or bores, such as a central bore 44, a lower bore 46, and an upper or clearance bore 48. The three apertures or bores 44, 46, and 48 extend entirely through the gasket. The bores 44, 46, and 48 align with the bores 20, 22, and 24, respectively of the base 12.

In addition to the three bores discussed in the preceding paragraph, the gasket 40 also includes a relatively short bore or pin hole 50 which extends inwardly from the rear face 42 of the gasket. The pin hole 50 receives the pin 28 to keep the gasket 40 aligned with the base 12. It will be noted that the bores 44, 46, and 48 extend through the gasket 40, between the rear face 42 and the front face, as best shown in FIG. 4. However, the pin hole 50 does not extend entirely through the gasket 40, but rather extends only part way through the gasket 40, inwardly from the rear face 42. Since its purpose is merely to receive the indexing pin 28 to keep the gasket 40 and the base 12 aligned, the bore 50 preferably does not extend entirely through the gasket. The bores 44, 46, and 48 extend through the gasket in order to perform their functions, as described above, and as discussed in more detail below.

The spray head 60 includes two portions, a cylindrical base portion 62, and a convex-concave front portion 120.

The cylindrical base portion 62 of the head 60 includes a rear face 64 and a front face 100, both of which faces are substantially parallel to each other. Moreover, the faces 64 and 100 are substantially parallel to the front and rear faces 16 and 26 of the base 12.

Five discharge ports or nozzles 66, 72, 78, 84, and 90 are shown extending through the base 62 of the head 60. The five discharge ports or nozzles are best shown in FIGS. 2 and 5, with added details shown in FIGS. 1 and 4. References will be made to FIGS. 1, 2, 4, and 5 in the following discussion concerning the discharge ports or nozzles and the spray head 60.

The five discharge ports or nozzles 66 . . . 90 are spaced apart from each other and they extend generally axially through the cylindrical base portion 62 of the head 60. The ports or nozzles are identified, primarily in FIGS. 2 and 5, by reference numerals 66, 72, 78, 84, and 90, counterclockwise and in increasing size with respect to each other. Each of the discharge ports or nozzles includes an inwardly tapered portion and a cylindrical portion. The tapered portion of each port or nozzle is substantially the same size. However, the cylindrical portions differ from each other in diameter, which provides a variable output from the spray nozzle apparatus 10, depending on which port is lined up with the threaded bore or port 22 of the base 12. The tapered portions are generally of a conical configuration, extending conversely inwardly from the rear face 64.

As best shown in FIG. 5, the discharge port or nozzle 66 includes a tapered portion 68 and a cylindrical portion 70. The discharge nozzle or port 72 includes a tapered portion 74 and a cylindrical portion 76. The cylindrical portion 76 of the port 72 is slightly larger in diameter than the cylindrical portion 70 of the nozzle or port 66. The nozzle or port 78 includes a tapered portion 80 and a cylindrical portion 82, the latter of which is slightly larger than the cylindrical portion 76 of the port 72. The nozzle 84 includes a tapered portion 86 and a cylindrical portion 88, the latter of which is slightly greater in diameter than the cylindrical portion 82 of the nozzle 78. Finally, the discharge port or nozzle 90 includes a tapered portion 92 and a cylindrical portion 94. The cylindrical portion 94 is, in turn, slightly greater in diameter than that of the cylindrical portion 88 of the nozzle or port 84.

On a graduated scale, the discharge nozzle or port 66 may be referred to as a number 1 nozzle, with the succeeding nozzles or ports generally referred to, successively, as numbers 2, 3, 4, and 5. The latter nozzle is designated by reference number 90, and the intermedi-

United States Patent and Trademark Office

Home Site Index Search FAQ Glossary Guides Contacts eBusiness eBiz alerts News Help

Full Text
Help

Go to Page:
Go

Sections:
- Front Page
- Drawings
- Specifications
- Claims

ate ports or nozzles are designated by their respective reference numerals 72, 78, and 84. The output from the port number 1 is substantially less than the output from the nozzle or port number 5, which has the greatest cylindrical diameter of the five.

It will be noted, particularly with reference to FIG. 4, that the outer or maximum diameter of the conically tapered portions of the nozzles or discharge ports is substantially the same diameter as the diameter of the bores or apertures 46 and 48 of the gasket 48. The respective diameters or sizes of the gasket apertures and the tapered portions are proportional to the size of the discharge pipe P, with reference to its internal diameter, through which the liquid spray flows to the nozzle apparatus 10.

As best shown in FIG. 4, there is a substantial difference between the diameter of the cylindrical bore portion 76, for nozzle 2 port, and the diameter of the cylindrical bore portion 94, the nozzle 5 port. The output of the port or nozzle 90 is accordingly substantially greater than the output of the nozzle or port 72.

As clearly illustrated in FIG. 4, the circuit hole 20 of the base 12 is aligned with the aperture or hole 46 of the gasket 48 and also with the discharge nozzle or port 72. The relative diameters of the various bores or apertures is also shown in FIG. 4. Since the bore 24 receives only a relatively small diameter wire or pin, for clamping purposes, it is obvious that the diameter of the bore 24 need not be large.

In conjunction with the discharge nozzles 1, 2, 3, 4, and 5 (reference numerals 66, 72, 78, 84, and 90, respectively), there are six axially extending notches 102, 104, 106, 108, 110, and 112, disposed on the outer periphery of the cylindrical portion 62 of the base 60. As shown in FIGS. 1 and 3, the notches each have a number beside them, to identify which of the discharge nozzles are aligned with the threaded bore or port 22 and accordingly with the supply pipe P (see FIG. 3). The notches 102 . . . 110 are disposed 180° from their respective nozzles or ports to which they are correlated, the discharge nozzles or ports 1 . . . 5 respectively.

The sixth notch 112, as best shown in FIG. 3, is disposed 180°, or diametrically, from a blank portion of the base 62 which does not have a discharge port or nozzle extending therethrough. Accordingly, when the notch 112 is aligned with the notch 30 on the base 12, the threaded bore or port 22 in the pipe P will be aligned only with a blank portion of the base 62 and there will accordingly be no flow or output from the spray nozzle apparatus 10.

The alignment of the notch 30 on the base 12 with the respective notches 102 . . . 112 is best shown in FIG. 1. In FIG. 1, the notch 30 of the base 12 is shown aligned with notch 110 on the head 60. The numeral 5 is shown adjacent the notch 110, to indicate that the largest discharge port, port 90, is aligned with the bore 22 and supply pipe P. This alignment is also illustrated in FIG. 4.

Extending through the head 60 is a central bore 96. The central bore 96 is centrally aligned with respect to the spray nozzle apparatus 10, and accordingly is aligned with the bores 20 and 46 of the base 12 and the gasket 48, respectively.

The bore 96 includes a counter bore 98 which extends inwardly from a convex or front surface 132 of the concave-convex front portion 130 of the head 60. This is also best shown in FIG. 4.

The bolt 150 extends through the aligned apertures 20, 46, and 96, to secure the three portions of the spray nozzle apparatus together. The bolt 150 includes a head 152, a stem or shank 154, and a threaded outer end portion 156. The threaded outer end portion 156 is shown in FIG. 4 as extending into the counterbore 98, where a self locking nut 160 is shown threadedly engaging the end 156 of the shank 154 of the bolt 150. Thus, the bolt 150 and the nut 160 secure the base 12, the gasket 48, and the head 60 together to complete the sanitary spray nozzle 10.

While a bolt and nut are illustrated and discussed herein as securing together the three portions of the nozzle apparatus 10, it is obvious that a screw extending into a tapped bore, or any other appropriate fastening means may be used. For example, the central bore 20 of the base 12 may simply extend inwardly from the face 26 and may be tapped to receive a threaded shank of a screw extending through the head 60.

With the spray nozzle apparatus 10 secured together, and the pipe P secured to the nozzle apparatus 10, the apparatus 10 is ready to be used, providing a discharge bore or port is aligned with the bore 22 and the pipe P secured therein. For illustrative purposes, particular reference will be made to FIG. 4 and particularly to the discharge port or nozzle 90 (port number 5) which is aligned with the aperture 46 of the gasket 48 and the bore 22 of the base 12 for the following explanation.

Fluid through the pipe P (see FIG. 1) flows through the bore 22 and the bore or aperture 46 of the gasket 48 to the inwardly tapering portion 93 of the discharge nozzle 90 (number 5). The fluid flow is directed inwardly toward the cylindrical portion 94 of the nozzle 90 by the inwardly tapering walls of the bore portion 92. Then the flow is directly outwardly through the cylindrical portion 94. From the cylindrical bore portion 94, the fluid flow impinges directly upon a circular concave face 122 of the concave-convex front portion 120 of the head 60. The circular concave face 122 extends outwardly from a minimum diameter inner portion 124, which comprises the juncture of the front face 108 of the cylindrical portion 62 of the head 60 with the concave-convex front portion 120 of the head 60. The circular concave face 122 extends outwardly from the juncture 124 in a generally smooth, regular curve to a maximum diameter outer portion 126. The maximum diameter outer portion or area 126 is the juncture of the circular concave face 122 with a second or outer cylindrical portion 128. The cylindrical portion 128 is an outer cylindrical portion, spaced apart from the cylindrical portion 62 of the head 60. The front or convex outer portion or surface 132 extends forwardly from the cylindrical portion 128. As best shown in FIG. 4, the counterbore 98 extends inwardly into the cylindrical portion 128 from the convex outer portion or surface 132.

In order to provide the desired downwardly and radially outwardly fan-shaped spray, the respective cylindrical bore portions 76 . . . 94 of the discharge ports 1 . . . 5 (66 . . . 90) are tangent to the circular concave face 122 at the juncture 124, as shown in FIG. 4. The bores 76 and 94 are both shown as tangent to the circular concave face 122 at the juncture 124. That is, the juncture 124 is tangent to the five circular faces of the five discharge ports or nozzles at the inner axial area or portion of each cylindrical bore. Accordingly, the distance between the longitudinal or center axis of the head 60 and the longitudinal axis of each of the five

United States Patent and Trademark Office

Home Site Index Search FAQ Glossary Guides Contarts eBusiness eBiz alerts News Help

Full Text
Help

Go to Page:
Go

Sections:
- Front Page
- Drawings
- Specifications
- Claims

bores 76, 78, 82, 93, and 94, varies, with the distance measured radially, being minimum for the bore 78, and maximum for the bore 94. The radial distance between the longitudinal axis of the spray nozzle apparatus 10 or . . . the axis of each of the cylindrical bore portions of the five discharge ports accordingly increases from a minimal radial distance for discharge port number 1 (nozzle 66) to a maximum radial distance for bore number 5 (nozzle 98). In each case, however, the cylindrical bore portion of each nozzle is tangent to the cylindrical concave face 122 at the junctures 124.

The circular concave face 122 curves continuously between the junctures 124 and the outer portion 126. The distance, accurately, between the junctures 124 and the outer edge 126 is ninety degrees, and accordingly any plane which passes through the longitudinal axis of the nozzle apparatus 10 includes an arcuate segment of the circular concave face 122. The curved face 122 is cylindrically circular in that it extends for a full 360° about the head 60, and in that 360° arc it is concave from a minimum diameter (or radius) from the junctures 124 to a maximum diameter (or radius) at the edge 123. The curved face 122 is regular in that the face 122 describes a circle or any plane which passes through the face 122 and which is perpendicular to the longitudinal axis of the head 60, and accordingly perpendicular to the longitudinal axis of the spray nozzle apparatus 10.

The convex outer or front portion 132 includes a pair of spaced apart and substantially parallel flats 134 and 136, best shown in FIG. 1. Between the flats and the outer cylindrical portion 130 are a pair of aligned shoulders 138 and 140. The purpose of the flats 134 and 136 is to allow a wrench to be inserted against the flats, and on the shoulders, in order to rotate the head 60 relative to the base 12 and to the gasket 40 to align the various discharge nozzle bores with the pipe P and its threaded bore 22. This allows the selection of any of the five varied outputs from the spray nozzle 10, as desired. With a wrench placed across the flats 134 and 136, the head 60 may be turned to align any of the notches 102 . . . 110 with the notch 30 for an output spray varying from a minimum from the nozzle or port number 1 (discharge nozzle or port 66) to a maximum with nozzle or port number 5 (discharge nozzle or port 98). If the notch 112 is aligned with the notch 30, no fluid or spray will be discharged from the head 60.

The use of "Teflon" for the material for the gasket 40 allows the head 60 to be rotated relative to the base 12 with a minimum of drag or frictional resistance, and yet still allows adequate sealing so as to prevent undesirable spray from emanating from the apparatus other than from a particular discharge nozzle or port. Moreover, the use of a self-locking nut 148 allows the apparatus to be adequately secured together, free from unnecessary bindings as the head is rotated relative to the base and gasket, and yet prevents the three major portions of the apparatus 10 from loosening during use.

To insure that the head 62 does not vibrate or move relative to the base 12 and the gasket 40 in flight, a relatively simple detent and ball lock, such as illustrated in FIG. 4, may be provided, if desired. FIG. 6 comprises a view in partial section of the assembled nozzle apparatus 10, showing the base 12, the gasket 40, and the cylindrical portion 62 of the head 60. All three elements are located outwardly, radially speaking, with respect to the five discharge ports or nozzles 1 . . . 5.

The base 12 includes a bore 36 extending inwardly from the front face 26. The gasket 40 includes a hole or aperture 56 extending through the gasket 40 and aligned with the bore 36 when the base 12 and the gasket 40 are disposed against each other. The cylindrical portion 62 of the head 60 includes six relatively short bores 116 which extend inwardly from the rear face 64. The bores 116 are radially spaced so as to be aligned with the bore 36 and the hole or aperture 56 when the respective notches 102 . . . 112 are aligned with the notch 30.

Within the bore 36 is disposed a compression spring 170, which is biased against a ball 172. The ball 172 extends into the bore 116 from the bore 36, and through the hole or aperture 56. The ball 172 accordingly helps to lock together the base 12 and the head 60.

However, since the head 62 must move relative to the base 12, the bores 116 include chamfered shoulders 111 which act as cam surfaces when the head 60 is moved relative to the base 12 to cam the ball 172 out of the bore 116 and into the ball 36 and the hole 56, against the bias of the spring 170, to allow the head 60 to rotate until the next successive bore 116 is aligned with the ball 172 and the hole 56 and bore 36. At each time as the alignment is made, the ball 172, under the bias of the compression spring 170, moves into the bore 116. "Extra" effort is required to turn, initially, the base 60 due to the force required to cam the ball 172 out of the bore 116. The "extra" effort helps to insure that the head 60 remains in its desired location, with the appropriate nozzles and notches aligned, as desired.

The nozzle apparatus of the present invention allows a user to change flow rates easily and rapidly with a minimum of effort and tooling. With each delivery nozzle or flow rate there is provided a fan shaped spray as fluid impinges against the double curved surface of the spray head. While the principles of the invention have been made clear in illustrative embodiments, there will be immediately obvious to those skilled in the art many modifications of structure, arrangement, proportions, the elements, materials, and components used in the practice of the invention, and otherwise, which are particularly adapted for specific environments and operative requirements without departing from those principles. The appended claims are intended to cover and embrace any and all such modifications, within the limits only of the true spirit and scope of the invention. This specification and the appended claims have been prepared in accordance with the applicable patent laws and the rules promulgated under the authority thereof.

What is claimed is:

1. Spray nozzle apparatus for providing a fan-shaped spray of liquid, comprising, in combination:

base means;

a first aperture extending through the base means for connecting to a flow of liquid to be sprayed;

spray head means rotatably secured to the base means including

discharge nozzle means comprising a plurality of discharge nozzles spaced apart from each other and selectively alignable with the first aperture of the base means for receiving a flow of liquid to be sprayed,

a circular concave face adjacent the discharge nozzle means against which the liquid flows from a discharge nozzle selectively aligned with the first aperture, and

each discharge nozzle of the plurality of discharge nozzles is tangent to the circular concave face to provide a fan-shaped spray of the liquid, when aligned with the first aperture.

United States Patent and Trademark Office

Home Site Index Search FAQ Glossary Guides Contacts eBusiness eBiz alerts News Help

Full Text
Help

Go to Page:
Go

Sections:
- Front Page
- Drawings
- Specifications
- Claims

2. The apparatus of claim 1 in which each discharge nozzle of the discharge nozzle means includes a tapered bore portion and a cylindrical bore portion, and the cylindrical bore portions are disposed adjacent the circular concave face.

3. The apparatus of claim 2 in which the cylindrical bore portions of the discharge nozzle means are each of a different diameter for providing a different flow of liquid spray from each discharge nozzle as it is selectively aligned with the first aperture of the base means.

4. The apparatus of claim 3 in which the base means includes a second aperture extending through the base means and spaced apart from the first aperture and comprising a closeout aperture, and the discharge nozzles are selectively aligned with the second aperture for closing.

5. The apparatus of claim 4 in which the base means further includes a gasket disposed against the spray head means, and the gasket includes a first aperture aligned with the first aperture of the base means and a second aperture aligned with the second aperture of the base means.

6. The apparatus of claim 5 in which the base means includes an indexing notch oriented in a predetermined manner with respect to the first aperture, and the discharge nozzle means includes a notch for each discharge nozzle for aligning the discharge nozzles selectively with the first aperture of the base means by alignment of the indexing notch of the base means with one of the notches of the base means.

7. The apparatus of claim 3 in which the spray head means further includes

a cylindrical portion,

a rear face disposed against the base means, and,

a front face disposed adjacent the circular concave face.

8. The apparatus of claim 6 in which the circular concave face of the spray head means includes a minimum diameter portion at the front face of the cylindrical portion and the cylindrical bores are tangent to the circular concave face at the minimum diameter portion.

9. The apparatus of claim 6 in which the base means further includes a front face and a gasket disposed between the front face of the base means and the rear face of the spray head means.

10. The apparatus of claim 9 in which the gasket of the base means includes a first aperture and a second aperture aligned respectively with the first and second apertures of the base means.

* * * * *

This is G o o g l e's cache of http://www.wilsonspraynozzle.sg/Spray-nozzles.htm as retrieved on Dec 27, 2007 13:59:38 GMT.
G o o g l e's cache is the snapshot that we took of the page as we crawled the web.
The page may have changed since that time. Click here for the current page without highlighting.
This cached page may reference images which are no longer available. Click here for the cached text only.
To link to or bookmark this page, use the following url: http://www.google.com/search?q=cache:bRjsDedfwUQJ:www.wilsonspraynozzle.sg/Spray-nozzles.htm+round+flat+fan+spray+nozzle+thl+entre+plakcodwrgl+sg

Google is neither affiliated with the authors of this page nor responsible for its content.

These search terms have been highlighted: round flat fan [redacted]

Browse our Products

- [redacted]
- Nozzles
- Air Atomizing Nozzles
- Specialty Nozzles
- Washdown Nozzles
- Cleaning Guns
- Liquid Transfer Nozzles
- Waterjet & Abrasive Jet Nozzles
- CIP Tank Cleaning Nozzles
- [redacted] & Accessories

Home | About Us | [redacted] Video | [redacted] Packages | Contact Us

Spray Nozzles

Spray [redacted] is a device which makes use of the pressure energy of a liquid to increase its velocity through an orifice and break it into drops.

Its performance can be identified and described precisely, so that the design engineer can specify exactly the [redacted] required for a given process. There are 3 main spray patterns produced by the large range of [redacted] nozzles:-

1) Full Cone Spray Pattern;
2) Flat Fan Spray Pattern;
3) Hollow Cone Spray Pattern.

Full Cone Spray Nozzles

With a full cone spray pattern the liquid is evenly distributed over a circular or square area.

A wide choice of full cone nozzles is available for general purpose applications, while additional [redacted] types can be specially designed for specific applications. Some of the more common types are shown below however there are many more than can be shown here.

Spiral Full Cone Spray Nozzles - T Series

Spiral nozzles work on the impact principle by deflection of a water stream onto a spiral surface which generates a continuous spiraling liquid curtain. The [redacted] droplets do not have the same even distribution that is produced by other types of full cone nozzles, however they possess other features such as:-

1. the [redacted] angle is maintained even at very low pressures and when spraying high viscosity liquids
2. because they don't have a vane in them they are virtually clog free
3. they produce much smaller droplets than standard full cone nozzles
4. they are available in the widest range of materials of any [redacted] type

Typical Applications - fire fighting, gas and smoke scrubbing, gas cooling, dust suppression & chemical processors.

Droplet size < below 1000 micron or 1mm

Connection: 1/4" to 4" BSP or NPT
Spray angles: 60° to 180°
Material: 316L Stainless Steel, Brass, PVC, PP, PVDF (Kynar), PTFE (Teflon®), Hastelloy C276

Internal TWIRL Full Cone - M series

Large Free Passage Type M Series (lowest clogging potential – Full Cone Spray)

Designed with and integrated 'S' shape vane, they offer the largest free passage available in the full cone [redacted] range. Ideal for handling dirty or re-circulated liquids or foreign matter, or wherever there is danger of the [redacted] clogging.

Typical Applications - Fire protection, gas scrubbers, cooling, washing, re-circulated liquids with large solids.

Droplet size > above 1000 micron or 1mm

Connection: 3/8" to 4 " BSP or NPT
Spray angles: 30°, 60°, 90° and 120°
Material: Brass, Carbon Steel, 316 Stainless Steel, PVC, Polypropylene, PTFE

AXIAL Full Cone S Vane - Type ME series Flange

Designed to deliver large volumes at low pressure while still maintaining spray pattern and liquid distribution. Typical Applications - coke quenching, cooling and scrubbing of gas

Connection: 80mm to 250mm flange
Spray angles: 90°, 120°
Material: Carbon Steel, 316 Stainless Steel & Cast Iron

Axial Spray with Swirl Vane – Type W series with internal S vane- Full Cone Round Spray

This two piece design has the largest range of spray angles and capacities. There is an extensive range to select from and it is an economical [redacted]. These nozzles have an internal vane with two precision machined spiral grooves and produce a very fine spray, in line with the inlet pipe.

Typical Applications: dust suppression in coal mines, cooling and scrubbing of air and gas, desuperheating steam, spray drying.

Connection: 1/8" to 1" BSP or NPT
Spray angles: 30°, 60°, 90° and 120°
Material: Brass, Carbon Steel, 316 Stainless Steel, PVC, Polypropylene, PTFE

MA series with Three Piece with internal S vane - Full Cone Round Spray

These full cone nozzles offer a three piece design which has the convenience of being able to disassemble them to clean.

Connection: 1/8", 1/4", 3/8" to 1/2" BSP or NPT
Spray angles: 60° to 120°
Material: 303 Stainless Steel, 316 Stainless Steel, Brass

Flat Fan Spray Nozzles

A complete range of flat fan nozzles is available. Different techniques are available to produce a flat spray, each one offering specific design and spray properties so that it is possible to choose the one [redacted] meeting all or most of the requirements for a given case.

Type F Flat Fan Nozzles

The F type are the most widely used flat fan [redacted] because of their large range of capacities, spray angles, connection sizes and materials. The capacities range from 0.06 l/min to 230 l/min @ 3 bar.

Connection: 1/8" to 1" BSP or NPT
Spray angles: 0° to 120°
Material: 303 Stainless Steel, 316 Stainless Steel, Brass

Large Angle Deflection Principle – Type FW

FW flat jet nozzles work on the deflection principle conveying a stream of water onto a machined deflecting surface, producing a wide angle flat spray pattern having low impact value and small droplets. Their round orifice minimises the risk of clogging.

Typical Applications:- Producing Fire Curtain, cooling and washing of vertical surfaces, washing fruits, stones or any such material on a moving conveyor.

Connection: 1/8" to 1" BSP or NPT
Spray angles: 90° to 140°
Material: 303 Stainless Steel, 316 Stainless Steel, Brass

High Impact Flat Fan – Type FK

High Impact K type nozzles work on the deflection principle and are designed to produce a narrow jet with high impact value and medium size droplets. The round orifice minimises the risk of clogging. They are sometimes called "spoon jets" because of the shape of the deflecting surface.

Typical Applications:- high pressure cleaning processes, felt washing in paper machines, washing products on a moving conveyor.

Connection: 1/8" to 3/4" BSP or NPT and quick connect
Spray angles: 15° to 50°
Material: 303 Stainless Steel, 316 Stainless Steel, Brass

Short Body Type GA

The short body of the GA nozzles makes it possible to use [redacted] spray pipes in machines and situations where space is very limited.

Typical Applications:- roll cooling in steel mills.

Connection: 1/4" to 3/4" BSP Parallel or NPT
Spray angles: 45°, 60°, 90°, 120°
Material: 303 Stainless Steel, 316L Stainless Steel, Brass, PVC, PP, PTFE (Teflon®)

Dovetail Type GY

GY [redacted] tips are usually mounted onto a pipe by means of a welded nipple and secured in place by a locknut. They can be easily be replaced with the assurance that the linear spray will be in the correct position because the dovetail maintains the correct orientation.

Typical Applications:- steel mills where spray position is critical.

Connection: Weld-on nipple
Spray angles: 0° to 120°
Material: 303 Stainless Steel, 316L Stainless Steel, Brass

Hollow Cone Spray Nozzles

Hollow Cone nozzles produce a circular spray where the liquid is distributed around the perimeter or circumference of the circle. They generate fine droplets. There are many different hollow cone nozzles available but they can be broadly divided into 4 basic types - Tangential Spray, Axial Spray, Deflection Type Axial Spray, Liquid Atomisers

---

Tangential Nozzles Type WE

These nozzles work on the tangential flow principle where the centrifugal force inside the whirl chamber

provides the energy for liquid breakup. As they have no internal vanes they are not susceptible to clogging and so are ideal when using recycled water or when there is solid matter in the liquid.

Typical Applications: gas and smoke scrubbing, cooling of large tanks and storage vessels, humidifying, dust suppression, foam control, fire fighting, chemical process engineering.

Connection: 1/8" to 2 1/2" BSP or NPT
Spray angles: 30° to 130°
Material: 303 Stainless Steel, 316L Stainless Steel, Brass

Tangential Nozzles Type PN

This range of hollow cone nozzles are made from tough glass fiber reinforced polypropylene for high mechanical strength and dimensional stability. They offer good corrosion resistance and moderate price. Together with their special polypropylene pipe clamps they offer the best solution in all cases where large quantities of nozzles have to be easily assembled onto pipe manifolds. The maximum recommended operating temperature is 75 degrees C.

Typical Applications: air humidification, gas scrubbing, dust suppression, foam control.

Connection: 3/8" to 1/2" BSP or NPT
Spray angles: 70°, 130°
Material: Glass fibre reinforced polypropylene

Axial Spray Without Swirl Vane – Type RB

The RB nozzles work on the tangential principle and produce a hollow cone spray pattern, in line with the inlet pipe. Having no internal vane minimises the danger of clogging while still producing fine droplets. They are especially suited to dust suppression applications in coal mines.

Typical Applications: dust suppression in coal mines, cooling.

Connection: 3/8" to 1 1/2" BSP or NPT
Spray angles: 60°, 70°, 80°
Material: 303 Stainless Steel, Brass

Deflection Type Axial Spray – Type RC

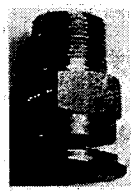

RC nozzles produce hollow cone spray pattern with very wide angles perpendicular to the inlet pipe. The spray is produced by deflection of the water flow against a fixed plate in front of the orifice.

Typical Applications: fire fighting, cleaning or spraying inside pipes and cylinders.

Connection: 1/4" to 3/8" BSP or NPT
Spray angles: 150°, 180°
Material: 303 Stainless Steel, Brass

Hydraulic Atomisers Type RX/RZ

Hydraulic atomisers are designed to deliver a very finely atomised hollow cone even at low pressures. The nozzles contain a precisely machined insert with tiny passages, which can be disassembled for cleaning should the become clogged. Protection against clogging can be achieved by fitting a strainer on the inlet. Flow rates range from 0.06 to 2 l/min @ 3 bar.

Typical Applications: humidifying processes in the textile industry, dust suppression, air moistening.

Connection: 1/4" BSP or NPT
Spray angles: 30° to 90°
Material: 303 Stainless Steel, 316 Stainless Steel, Brass

Cluster Spray - Fine WaterMist Type CA

CA multiple spray full cone nozzles produce a cloud of consistently sized fine droplets. These multi-orifice nozzles produce a finer spray than a standard full cone, single orifice nozzle working at the same pressure and delivering the same quantity of liquid.

Typical Applications - Gas cooling, fire suppression and fire protection in engine room, control room, kitchen onboard FPSO, drilling vessels, ocean going vessels, oil rigs, production platforms and work barges.

Connection: 1/2", 3/4", 1", 2" BSP or NPT
Spray angles: 60°, 130°
Material: 303 Stainless Steel, 316 Stainless Steel, Brass

SNAP RELEASE Nozzles – Type SF Series

Double or Single Clamp adapter fits any nozzles. Polypropylene material resistant to most acid or alkaline.
Quick change for easy hand tight installation.
Nozzles inter-changeable for Fan, Full cone or Hollow cone.
Application : PCB (Printed Circuit Board) washing and rinsing, electronic components washing and rinsing.

Material : Polypropylene

*Teflon is a Registered Trademark of Dupont Co

Wilson Spray Nozzles - Singapore
Tel: +65 67741828 (Sales Hot-Line) Fax: +65 67779813

E-mail: sales@wilsonspraynozzle.sg

This is G o o g l e's cache of http://lancaster.unl.edu/ag/factsheets/289.htm as retrieved on Jan 10, 2008 05:27:55 GMT.
G o o g l e's cache is the snapshot that we took of the page as we crawled the web.
The page may have changed since that time. Click here for the current page without highlighting.
This cached page may reference images which are no longer available. Click here for the cached text only.
To link to or bookmark this page, use the following url: http://www.google.com/search?q=cache:uQA2a_YMYAJ:lancaster.unl.edu/ag/fact...289.htm+round+flat+fan+spray+nozzle&hl=en&ie=UTF-8

Google is not affiliated with the authors of this page nor is it responsible for its content.

These search terms have been highlighted: round flat fan spray nozzle

University of Nebraska Lincoln
Cooperative Extension in Lancaster County
Educational Resource

289-01

Sprayer Nozzle Tip Selection

Tom Dorn, Extension Educator

Printer-Friendly Version (100KB)

Nearly all farms have a field sprayer. One of the important skills farmers should learn is how to select nozzle spray tips that are matched to the requirements of the pesticide application. There are several general types of spray tips used in agriculture: **flat fan**, flood, hollow cone, solid cone, even-spray, raindrop, and various drift reduction tips. **Flat fan spray** tips and even-spray tips are the two most popular with farmers who do their own chemical application. Hollow cone, solid cone, and flood spray tips have their place as well. Drift reduction spray tips use various methods to increase droplet size but will not be discussed in this fact sheet.

Achieving Application Uniformity

Regardless of the spray nozzle selected, certain basic nozzle selection and spray management techniques will help achieve the results desired. With one exception, (Band Spraying, see below) uniform distribution is achieved by overlapping the outer edges of the individual spray patterns. By correct spacing of the nozzles along the boom and running the correct boom height above the spray surface, one can achieve the recommended spray pattern overlap for uniform application. The required amount of overlap will depend on the nozzle tip design. Manufacturer recommendations range from 30% to 100% overlap, depending on the spray tip. Because the recommended overlap may change from one design to the next, one should always refer to the manufacture's information for correct tip height and spray overlap when changing spray tips on the boom.

Spray Drift Management

Consider two spray droplets, one has twice the diameter of the other. The larger droplet will contain eight times the volume and therefore will have eight times the weight of the smaller droplet. Larger and heavier droplets fall through the air more quickly than smaller droplets and therefore have less tendency to be carried off-target by the wind. This off-target movement is known as drift.

Smaller spray droplets have greater surface area per unit volume as compared to larger diameter droplets and therefore can experience greater moisture evaporation while in the air. As a droplet evaporates, it gets smaller and lighter and is even more subject to drift.

All spray tips will operate over a range of pressures. When operated below the recommended pressure range, the spray tip will not develop a full spray pattern. When operated above the recommended pressure range, the tip will produce a large percentage of very small droplets which can result in particle drift and poor deposition patterns. When operated near the lower end of the recommended pressure range, a nozzle will produce larger droplets and therefore particle drift is reduced. For better penetration into a crop canopy and/or more thorough coverage with more (but smaller) droplets, the operator may choose a spray tip which applies the recommended volume per acre nearer the higher end of recommended pressures for the spray tip.

Flat Fan Nozzles

A **flat fan spray** tip gets its name from the shape of the spray pattern it produces, which resembles a hand-held folding fan or an inverted "V". Standard **flat fan spray** tips are designed to produce a narrow elliptical spray pattern for broadcast (full coverage) application. Deposition of spray is heaviest in the center of the spray pattern, (directly under the spray tip) and graduates to nothing at the outer edges. When properly spaced along the boom and with the boom at the proper height above the spray surface, **flat fan spray** tips apply a uniform spray pattern and are widely used in agricultural applications for applying pre-plant incorporated, pre-emergent and post emergent pesticides for weed, insect and disease control.

Some spray tips are designed to operate over a broader range of pressures than the standard **flat fan** tips. These are commonly referred to as Extended Range spray tips. Because of the broader range of operating pressures, extended range spray tips can be used in more situations and are becoming more popular choices for general farm use.

Other designs, used mainly to apply insecticides or fungicides to standing crops, are made with two orifices per spray tip. Because they are essentially two smaller orifices working in tandem which tend to produce smaller droplet sizes and because the spray streams are angled differently, one can achieve more thorough coverage and better penetration into the crop canopy.

Band Spraying

A special type of **flat fan spray** tip has been designed for banded spray operations. In banded spray operations, only a portion of the total land area receives a chemical application, leaving untreated strips. In applications where the band will be sprayed with only one nozzle, the nozzle must apply a uniform amount of spray over the entire width of the band. Manufacturers have designed spray tips specifically for this purpose called even-spray tips. Because of the very different spray patterns produced, one should be careful not to confuse **flat fan** and even-spray nozzle tips when equipping a sprayer for band versus broadcast applications.

Hollow Cone and Full Cone Nozzles

These spray tips have a **round** orifice which produces a cone-shaped spray pattern. Both solid cone and hollow cone designs are available. These are used mainly in air blast spray systems for use in orchards and vineyards.

Flood Nozzles

Flood jet (a.k.a., flooding or flood) nozzles are used for broadcast application of chemicals. This system is popular with commercial applicators because the recommended nozzle spacing is typically 40 or 60 inches, thus requiring large diameter orifices which are less prone to plugging than the smaller orifices used in **flat fan** nozzles with 20 to 30 inch nozzle spacing. These nozzles also produce relatively larger droplet sizes, resulting is less spray drift than typical **flat fan** designs. The larger droplet sizes also are less affected by higher ground speeds and therefore maintain acceptable deposition patterns when used on high-speed commercial spray rigs.

Selecting Spray Tips

When selecting a spray tip for a given application, three factors must be considered. The material the tip is made of, the size of orifice needed, and the spray angle.

All spray tips wear out eventually and must be replaced. The actual life of a spray tip depends on the abrasiveness and corrosiveness of the spray solution. If a tip is made from a soft material, e.g., brass, the tip life can be very short indeed. Polymer spray tips provide better wear life than brass, and have good chemical resistance but, as with brass, polymer tips can be easily damaged by improper cleaning techniques. Stainless steel tips have better durability than those made of brass or polymer. Stainless steel provides good wear and excellent chemical resistance and is not as subject to mechanical damage. One can buy tips made entirely of stainless steel or polymer tips with a stainless steel orifice insert. Hardened stainless steel, as one could imagine, has improved wear life over regular stainless steel. Ceramic orifices are the hardest, and therefore the longest-wearing (and most expensive) tips.

As with any type of orifice, the output per minute through a spray tip depends on the operating pressure and the size of the opening. When selecting spray tips, one needs to consider: the desired volume of spray output per acre, the intended operating pressure, the travel speed of the sprayer through the field, and the nozzle spacing on the boom.

Spray tip manufacturers have charts that list the output per acre for each spray tip design and orifice size.

Once the [redacted] spacing and the travel speed are known, one can study these charts to find the tip(s) that will apply the required volume of spray solution per acre. When more than one tip is capable of applying the desired volume per acre, the selection for which specific tip to use is then made, based on the operating pressure one wants to run in consideration for coverage versus spray drift potential.

Alternatively, when selecting a spray tip, one could calculate the output, in Gallons Per Minute (GPM) per spray [redacted] that is needed for a given application using the formula, listed in Figure 1--Selecting Nozzles. For example: To apply 15 Gallons Per Acre (GPA) while traveling 6 Miles Per Hour (MPH) with a [redacted] spacing of 30 inches (W), the calculation would be:

GPM/[redacted] = GPA x MPH x W / 5940
= 15 GPA x 6 MPH x 30" / 5940
= 0.45

Once the required GPM/[redacted] is known, one could refer to the manufacture's information to select a tip that matches the output criteria at the desired operating pressure. A Delavan 110-6 will have an output of 0.42 GPM at 20 Pounds per Square Inch (PSI) and 0.47 GPM at 25 PSI. This tip will have the desired output somewhere between these two operating pressures and could be used in this application.

To estimate the correct pressure for an output of 0.45 GPM, use the Equation in Figure 1--Correcting Pressure, (substituting GPM for GPA).

PSI required = (GPM desired/GPM initial)^2 x PSI initial
= (0.45 GPM/0.47 GPM)^2 x 25 PSI
= (0.957)^2 x 25 PSI
= 0.916 x 25 PSI
= 23 PSI.

Manufacturers offer several choices of spray angles. **Flat fan** designs typically always come in both 80 and 110 degree spray angles. 65 and 73 degree spray angles are available in many spray tip designs as well. The recommended [redacted] spacing and tip height above the surface to be sprayed is dictated by the spray angle.

Within a given class of spray tips, the orifice size determines the spray volume output at a given pressure. The spray tip industry uses a standard pressure of 40 PSI when designing the output capacity of **flat fan** spray tips. For example: Consider TeeJet spray tips with 8004 in the name. The "80" designates the spray angle, 80 degrees. The output capacity at 40 PSI would be 0.4 GPM. A Delavan 80-4 will produce the same results. Likewise, a TeeJet 11004 and Delavan 110-4 will both produce a 110 degree spray angle with an output capacity of 0.4 GPM.

For flood nozzles, the industry uses a standard pressure of 10 PSI when designating the spray output. For example: a TeeJet TK-3 will output 0.3 GPM at 10 PSI, as will a Delavan D3.

Example of Sprayer Tip Selection: A producer wants to broadcast a pre-plant incorporated herbicide. Drift reduction is more important in this situation than closely spaced droplet deposition. The producer wants the tips to last for many days of spraying without concern for wear and need for replacement. He therefore chooses a stainless steel orifice, because of its longer life than brass or polymer. The sprayer is set up on a 20 inch [redacted] spacing. He wants to apply 20 GPA with a field speed of 5 MPH.

The producer finds an 80 degree, extended range [redacted] in the TeeJet catalog (XR8005VS) that is listed as applying 21 GPA while traveling 5 MPH at 20 PSI on a 20 inch spacing.

This [redacted] would be a close fit to the original design criteria when operated at 20 PSI and 5 MPH. Many times a farmer will simply calibrate the sprayer at 20 PSI and 5 MPH and use this spray tip without further adjustments.

However, after consideration of field size and sprayer tank volume, this farmer decides 20 GPA would be much more convenient than 21 GPA because at 20 GPA the saddle tanks should run nearly empty at the end of every 6 rounds with the sprayer. This puts the farmer on the same end of the field as the nurse tank and chemical storage each time it needs to be refilled. There are two ways to apply the design goal of 20 GPA using this [redacted] tip.

If the spray rig travel speed could be increased to 5.25 MPH instead of the original 5 MPH, these spray tips would produce an output of 20 GPA. (To reduce the volume by five percent, increase travel speed by five percent).

The book shows this [redacted] can operate as low as 15 PSI. At 15 PSI the output would be 18.4 GPA. The farmer therefore knows he can achieve the desired 20 GPA by operating somewhat below 20 PSI but well above the minimum recommended pressure of 15 PSI.

Using the equation for Correcting Pressure from Figure 1, one can calculate the pressure required to adjust the output per acre.

PSI required = (GPM desired/GPM initial)^2 x PSI initial
= (20 GPA/21 GPA)^2 X 20 PSI
= (0.95)^2 X 20 PSI
= (0.903) X 20 PSI
= 18 PSI

This spray tip design should apply 20 GPA at a 5 mph field speed when operated at 18 PSI.

Figure 1. Calibrating a Sprayer

Selecting Nozzles
GPM/[redacted] = GPA x MPH x W / 5940

Catch Test
GPM/[redacted] = 7.5 / seconds per pint (16 fl oz)

Calculating Output
GPA = (5940 x GPM/[redacted]) / (MPH x W)

Correcting Pressure
PSI required = (GPA desired / GPA initial) ^{2} x PSI initial

Result of Pressure Change
New GPA = (New PSI / initial PSI) x initial GPA

Calculating True Ground Speed
MPH = 68.2 / seconds / 100 feet

Key to Abbreviations

GPM = Gallons Per Minute
MPH = Mile Per Hour
GPA = Gallons Per Acre
PSI = Pounds per Square Inch
W = Width between nozzles in inches

For more information on selecting sprayer [redacted] tips see NebGuide G89-955 Nozzles - Selection and Sizing http://ianrpubs.unl.edu/farmpower/g955.htm

For more information on drift, see NebGuide G90-1001 Spray Drift of Pesticides http://ianrpubs.unl.edu/pesticides/g1001.htm

For more information on sprayer calibration, see NebGuide G88-865 Fine Tuning a Sprayer Using the Ounce Calibration Method. http://ianrpubs.unl.edu/farmpower/g865.htm

Return to Agriculture & Acreage Resources

University of Nebraska Cooperative Extension abides with the non-discrimination policies of the University of Nebraska-Lincoln and the United States Department of Agriculture.

Copyright ©1996-2001, University of Nebraska Cooperative Extension in Lancaster County

To: UDOR U.S.A., INC. (**trademark@alteralaw.com**)

Subject: TRADEMARK APPLICATION NO. 78867933 - 1325.8-US-01

Sent: 1/14/2008 6:15:27 PM

Sent As: ECOM114@USPTO.GOV

Attachments:

IMPORTANT NOTICE
USPTO OFFICE ACTION HAS ISSUED ON 1/14/2008 FOR APPLICATION SERIAL NO. 78867933

Please follow the instructions below to continue the prosecution of your application:

VIEW OFFICE ACTION: Click on this link **http://tmportal.uspto.gov/external/portal/tow?DDA=Y&serial_number=78867933&doc_type=REC&mail_date=20080114** (or copy and paste this URL into the address field of your browser), or visit **http://tmportal.uspto.gov/external/portal/tow** and enter the application serial number to **access** the Office action.

PLEASE NOTE: The Office action may not be immediately available but will be viewable within 24 hours of this notification.

RESPONSE MAY BE REQUIRED: You should carefully review the Office action to determine (1) if a response is required; (2) how to respond; and (3) the applicable **response time period**. Your response deadline will be calculated from **1/14/2008**.

Do NOT hit "Reply" to this e-mail notification, or otherwise attempt to e-mail your response, as the USPTO does NOT accept e-mailed responses. Instead, the USPTO recommends that you respond online using the Trademark Electronic Application System response form at http://www.uspto.gov/teas/eTEASpageD.htm.

HELP: For *technical* assistance in accessing the Office action, please e-mail **TDR@uspto.gov**. Please contact the assigned examining attorney with questions about the Office action.

WARNING

1. The USPTO will NOT send a separate e-mail with the Office action attached.

2. Failure to file any required response by the applicable deadline will result in the ABANDONMENT of your application.