THIS DISPOSITION
IS NOT CITABLE AS PRECEDENT
OF THE T.T.A.B.

01 APR 2004

UNITED STATES PATENT AND TRADEMARK OFFICE

Trademark Trial and Appeal Board

In re F. Schumacher & Co.

Serial No. 75613624

Diane B. Melnick of Fross Zelnick Lehrman & Zissu for F. Schumacher & Co.

Richard S. Donnell, Trademark Examining Attorney, Law Office 106 (Mary Sparrow, Managing Attorney).

Before Hanak, Hohein and Drost, Administrative Trademark Judges.

Opinion by Hanak, Administrative Trademark Judge:

F. Schumacher & Co. (applicant) seeks to register the design shown below as a mark for "sample books for wallcoverings and wallpaper" (Class 16) and "vinyl wallcoverings and wallpaper" (Class 27). The application was filed on December 30, 1998 with a claimed first use date as to both classes of goods of July 1998.

At the outset, two points should be clarified. First, for the sake of brevity, we will use the term "wallpaper" to refer collectively to wallpaper, wallcoverings and vinyl wallcoverings. Second, as the drawing below indicates,

applicant is not claiming trademark rights in the entire configuration of its wallpaper sample book. Rather, it is claiming trademark rights in only that portion of its wallpaper sample books which constitutes what the applicant and the Examining Attorney have both referred to as the "rounded binding."

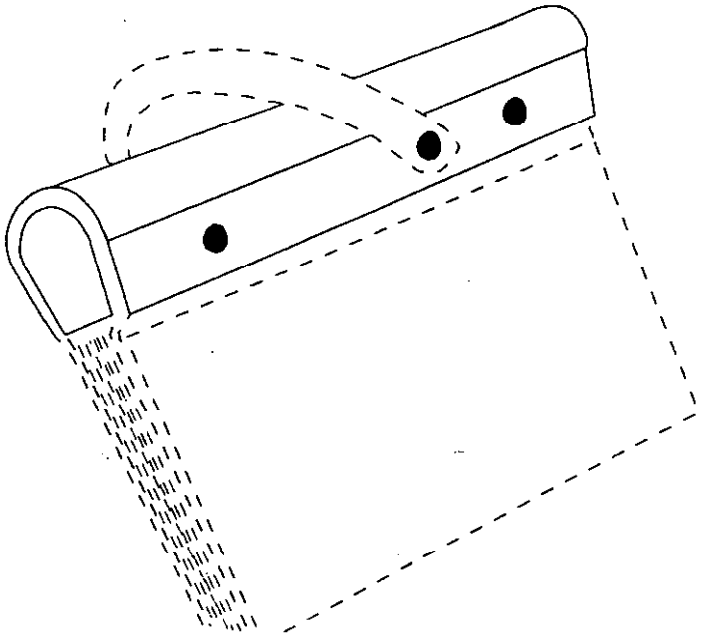

Citing Sections 1, 2 and 45 of the Trademark Act, the Examining Attorney ultimately refused registration because "the proposed mark consisting of a 'configuration of a rounded spine binding for sample books' … consists of a non-distinctive configuration of the <u>packaging</u> for the goods." (Examining Attorney's brief page 1, emphasis added). To elaborate, initially applicant sought to register its mark on the basis that its mark was inherently distinctive for both its Class 16 and Class 27 goods.

During the course of the examination process, applicant, while maintaining that its mark was inherently distinctive, submitted an alternative claim of acquired distinctiveness pursuant to Section 2(f) of the Trademark Act. It is the contention of the Examining Attorney that applicant's mark (i.e. the rounded binding for sample books) is not inherently distinctive, and that applicant has failed to show that said mark has acquired distinctiveness.

When the refusal to register was made final, applicant appealed to this Board. Applicant and the Examining Attorney filed briefs. Applicant did not request a hearing.

We will consider first the refusal to register applicant's mark for its Class 16 goods, namely, "sample books for wallcoverings and wallpaper." At the outset, one point should be clarified. During the course of the five year prosecution of this application, both applicant and the Examining Attorney have agreed that applicant's rounded binding for its sample books constitutes product packaging, and not product design. This is an important distinction because it is well established that product design marks can never be inherently distinctive, whereas it is possible for product packaging marks to be inherently distinctive. Wal-Mart Stores Inc. v. Samara Brothers Inc., 529 U.S. 205,

54 USPQ2d 1065, 1069 (2000). Obviously, this is not to say that all product packaging marks are inherently distinctive. A product packaging mark which is not inherently distinctive may nevertheless achieve "acquired distinctiveness" and thus function as a mark "if it has developed secondary meaning, which occurs when, in the minds of the public, the primary significance of a [mark] is to identify the source of the product." Wal-Mart Stores, 54 USPQ2d at 1068.

To be quite blunt, we fail to see how the Examining Attorney and the applicant have characterized applicant's mark as applied to applicant's Class 16 goods (sample books for wallcoverings and wallpaper) as product packaging when they both agree that the mark consists of a rounded binding for the sample books. In our view, the binding of a sample book (rounded or flat) is an integral part of the sample book itself and thus is more akin to product design and not product packaging. However, our disagreement with the Examining Attorney and the applicant is of no consequence because, as will be explained, we find that as applied to the Class 16 goods, applicant's "product packaging" mark (i.e. the rounded binding for its sample books) has not been shown to be inherently distinctive, but instead has been shown to have acquired distinctiveness. Thus, whether

we categorize applicant's mark as applied to applicant's Class 16 goods (i.e. the sample books themselves) as product packaging or product design is, as a practical matter, of no consequence in this case. Moreover, we are reluctant to not at least consider the possibility that applicant's mark constitutes product packaging for its Class 16 goods given (1) that both the Examining Attorney and applicant agree that it does, and (2) that "difficult lines [separate] product-design and product-packaging trade dress." Wal-Mart Stores, 54 USPQ2d at 1069.

In determining whether a mark is inherently distinctive or has acquired distinctiveness, we are required to make this determination from the perspective of the ordinary purchasers or users of the goods in question. Cf. Magic Wand Inc. v. RDB Inc., 940 F.2d 638, 19 USPQ2d 1551, 1552-53 (Fed. Cir. 1991); In re Montrachet S.A., 878 F.2d 375, 11 USPQ2d 1393, 1394 (Fed. Cir. 1989); and In re Northland Aluminum Products, Inc., 777 F.2d 1556, 227 USPQ 961, 963 (Fed. Cir. 1985).

There is no question that the true purchasers and users of wallpaper sample books are the owners and operators of stores which sell wallpaper. Applicant has submitted the declaration of Elinor Shebar, its vice president of merchandising. Ms. Shebar states that the

average wallpaper retail store carries 500 to 1000 wallpaper sample books. However, according to Ms. Shebar, applicant's market research reveals that the ultimate purchasers of wallpaper look at only four or five wallpaper sample books before making their purchasing decision.

Thus, while ultimate consumers are users of wallpaper sample books in the limited sense that they review four or five such books before making their purchasing decision, the true purchasers and users of wallpaper sample books are the owners and operators of stores which sell wallpaper. The sales personnel at these wallpaper stores deal with wallpaper sample books virtually all of their working hours, day in and day out.

Given the fact that personnel at wallpaper stores deal with wallpaper sample books on such a frequent basis, it is clear that they would be able to notice slight differences in wallpaper sample books which would go unnoticed by the ordinary, ultimate purchaser who may review but four or five wallpaper sample books over the course of many years. Thus, in making our determination as to whether applicant's mark is inherently distinctive, and if not, whether it has acquired distinctiveness, we will focus on the professional sales personnel at wallpaper stores.

To cut to the quick, we find that applicant has established that to wallpaper sales personnel, its rounded binding for its sample books -- if considered product packaging -- is almost, but not quite, inherently distinctive. Both applicant and the Examining Attorney have made of record numerous pictures showing applicant's wallpaper sample books with a rounded binding and wallpaper sample books of numerous of applicant's competitors, all of which have a flat binding. Indeed, at page 15 of his brief, the Examining Attorney concedes that "there are no examples of competitors' sample books with a 'rounded spined binding' in the record." In her declaration, Ms. Shebar explains that applicant intentionally selected its distinctive rounded binding for its sample books in order to make certain that wallpaper sales personnel would be more likely to notice applicant's sample books and select one or more of them to present to the ultimate purchasers of wallpaper, who, as previously noted, typically review but four or five sample books before making their purchasing decision. Ms. Shebar goes on to note that no other competitor uses a rounded binding for its sample books, but instead all other competitors use flat bindings. Ms. Shebar explains that applicant's rounded binding sample books are "custom-prepared by third-party contractors," and

cost applicant approximately $1.00 more per book to have produced as opposed to the standard flat binding sample books.

In addition to Ms. Shebar's declaration, applicant also submitted the declaration of Therese Smith, who says that she is a salesperson at Holbro Decorating Center in Rockville Centre, New York. Ms. Smith states that when she first saw applicant's wallpaper sample books with their rounded binding she found them to be "unusual in style because, instead of having a flat spine like all of the other wallpaper sample books, [applicant's] have a rounded spine." Ms. Smith goes on to note that whenever she sees "a wallpaper sample book with a rounded spine, I assume that it is a [sample] book from [applicant]."

Obviously, applicant has made a relatively strong case in supporting its contention that its rounded bindings for its wallpaper sample books are inherently distinctive. From a purely objective point of view, we are particularly impressed with the fact that applicant has chosen to utilize custom rounded bindings as opposed to the industry norm flat bindings despite the fact that such customized rounded bindings cost $1.00 per sample book more to produce. This higher cost is a very objective factor in

determining whether applicant's sample books may be considered inherently distinctive.

Nevertheless, we find that while this is a close call, applicant's rounded bindings for its sample books (if considered product packaging) are not so inherently distinctive that they would be recognized from the very outset as a source identifier, that is, as a trademark. In this regard, reference is made to Seabrook Foods, Inc. v. Bar-Well Foods Ltd., 568 F.2d 1342, 196 USPQ 289, 291 (CCPA 1977). In Seabrook, the Court set forth three factors in determining whether a design was inherently distinctive. The first factor is whether the design is a common basic shape. In this regard, there is no dispute that there are a plethora of different books besides wallpaper sample books, and that many of these books have rounded bindings. Thus, wallpaper sales personnel, who obviously are exposed to a wide array of books besides wallpaper sample books, would not in our judgment immediately find applicant's rounded binding to be inherently distinctive. A second factor set forth in Seabrook is whether the design is unique or unusual in a particular field. The record reflects that in one limited sense of the word, applicant's rounded binding is "unique" in the sense that that word is defined as meaning a "one and only." Webster's New World

Dictionary of the American Language (2d ed. 1970). However, applicant's rounded binding for its wallpaper sample books was not from the very beginning unique in the sense that it has an "original, distinctive, and peculiar appearance." In re McIlhenny Co., 278 F.2d 953, 126 USPQ 138, 140 (CCPA 1960). The declaration of Ms. Smith submitted by applicant never stated that applicant's rounded binding was in any sense "peculiar." The third and final Seabrook factor is whether applicant's rounded binding is but a mere refinement of a commonly-adopted binding, in this case, a flat binding. We find that applicant's rounded binding, while intended to serve as a trademark from the outset, constitutes what may be called a refinement of the standard flat bindings used in the wallpaper sample books of applicant's competitors.

As we said at the outset, applicant has made a strong showing that as applied to its Class 16 goods (sample books for wallcoverings and wallpaper) which are purchased and used by wallpaper professionals, that its mark was, at the outset, nearly inherently distinctive assuming that the mark constitutes product packaging, which, as noted earlier, we believe it does not.

We turn now to applicant's claim pursuant to Section 2(f) of the Trademark Act that its mark has acquired

distinctiveness for its Class 16 goods (sample books for wallcoverings and wallpaper). Our primary reviewing Court has held that as a mark's non-distinctiveness increases, a greater evidentiary showing pursuant to Section 2(f) is required to establish that said mark has acquired a secondary meaning. Yamaha International v. Hoshino Gakki, 840 F.2d 572, 6 USPQ2d 1001, 1008 (Fed. Cir. 1988). We believe the converse is true. That is to say, if a mark from the very outset is almost, but not quite, inherently distinctive, then a very minimal showing pursuant to Section 2(f) should be sufficient to establish that the mark has acquired distinctiveness (secondary meaning).
At the outset, we note that the Trademark Act is silent as "to the weight of evidence required for a showing under Section 2(f)." In re Owens-Corning Fiberglas Corp., 777 F.2d 1116, 227 USPQ 417, 422 (Fed. Cir. 1985). Of course, Section 2(f) of the Trademark Act provides that "proof of substantially exclusive and continuous use thereof as a mark by the applicant in commerce for the five years before the date on which the claim of distinctiveness is made" may be "accepted as prima facie evidence that the mark has become distinctive." In this case, applicant did not file its alternate claim of acquired distinctiveness pursuant to Section 2(f) until July 25, 2001, three years after it

first claimed that it used its mark in July 1998. However, at the present time well over five years have elapsed since applicant first used its mark in July 1998. Thus, we find that this factor favors a finding that applicant's mark has acquired distinctiveness. In other words, while wallpaper sales professionals may not have initially viewed applicant's rounded binding for its wallpaper sample books as being distinctive in July 1998, we believe that these professionals have now come to view this rounded binding as having acquired distinctiveness.

We have already pointed out that even the Examining Attorney concedes that, as noted by Ms. Shebar, no other competitor of applicant is using any type of a rounded binding for its wallpaper sample books. We have also noted that Ms. Smith -- a professional sales person at a decorating center in Rockville Centre, New York -- has stated that from the very beginning she viewed applicant's rounded bindings as being distinctive in that they indicated that the wallpaper sample books emanated solely from applicant. Moreover, we have also previously noted that Ms. Shebar, applicant's vice president of merchandising, stated that applicant specifically selected the rounded binding in order that it might stand out to wallpaper sales professionals and that this

"distinctiveness" was of great value to applicant despite that the fact that it cost applicant $1.00 more per book to have produced rounded binding books as opposed to the industry norm flat binding books.

In short, the refusal to register applicant's mark for applicant's Class 16 goods (sample books for wallcoverings and wallpaper) is hereby reversed on the basis that applicant has established that it mark has acquired distinctiveness in the eyes of purchasers and users of these wallpaper sample books, namely, wallpaper sales professionals.

We turn now to a consideration as to whether applicant's mark is inherently distinctive or has acquired distinctiveness as applied to applicant's Class 27 goods (vinyl wallcoverings and wallpaper). Unlike wallpaper sample books, vinyl wallcoverings and wallpaper are ultimately purchased by ordinary consumers. Thus, as noted earlier in this opinion, in judging whether a mark is distinctive or has become distinctive, we are obligated to make this determination through the eyes of typical purchasers and users of the goods in question. Applicant has simply failed to make of record any evidence whatsoever establishing that the rounded binding on its wallpaper sample books was initially viewed or has ever been viewed

by ordinary purchasers of vinyl wallcoverings and wallpaper as distinctive or as having become distinctive. Accordingly, the refusal to register applicant's mark for applicant's Class 27 goods is affirmed.

Decision: The refusal to register with regard to applicant's Class 16 goods is reversed because applicant has established that with regard to these goods, applicant's mark has acquired distinctiveness pursuant to Section 2(f) of the Trademark Act. The refusal to register applicant's mark with regard to applicant's Class 27 goods is affirmed.